can-am™

BRP

2013

Side-by-side Vehicles

Shop Manual

COMMANDER™ 800R/1000

219 100 661

TABLE OF CONTENTS

SAFETY NOTICE IX

INTRODUCTION X
VEHICLE INFORMATION X
ENGINE EMISSIONS INFORMATION XII
MANUAL INFORMATION XIII
FASTENER INFORMATION XVII

01 MAINTENANCE
01 – BREAK-IN INSPECTION 7
02 – PERIODIC MAINTENANCE SCHEDULE 9
03 – PERIODIC MAINTENANCE PROCEDURES 11
GENERAL 11
PROCEDURES 11
ENGINE (AIR INTAKE SYSTEM) 11
ENGINE (EXHAUST SYSTEM) 12
ENGINE (LUBRICATION SYSTEM) 13
ENGINE (COOLING SYSTEM) 15
ENGINE (TOP END) 21
CONTINUOUSLY VARIABLE TRANSMISSION (CVT) 21
GEARBOX 22
FUEL SYSTEM 24
ELECTRICAL SYSTEM 25
DRIVE SYSTEM 25
CHASSIS (WHEELS AND TIRES) 27
CHASSIS (STEERING SYSTEM) 27
CHASSIS (SUSPENSION) 28
CHASSIS (BRAKES) 30
CHASSIS (PASSENGER HANDHOLDS) 31
CHASSIS (TOW HITCH) 32
04 – STORAGE PROCEDURE 33
GENERAL 33
PROCEDURES 33
FUEL SYSTEM 33
ENGINE 33
ELECTRICAL SYSTEM 34
DRIVE SYSTEM 34
CHASSIS 34
05 – PRESEASON PREPARATION 35
06 – SPECIAL PROCEDURES 37
GENERAL 37
ROLLED OVER VEHICLE 37
SUBMERGED VEHICLE 37

02 ENGINE, CVT AND GEARBOX
01 – ENGINE REMOVAL AND INSTALLATION 39
PROCEDURES 40
ENGINE REMOVAL 40
ENGINE INSTALLATION 42
ENGINE MOUNTS 42
02 – AIR INTAKE SYSTEM 43
GENERAL 45
PROCEDURES 45
AIR FILTER 45
AIR FILTER HOUSING 45

TABLE OF CONTENTS

02 ENGINE, CVT AND GEARBOX (cont'd)

03 – EXHAUST SYSTEM 47
- GENERAL 48
- PROCEDURES 48
  - SPARK ARRESTER 48
  - MUFFLER 48
  - "Y" EXHAUST PIPE 48
  - HEAD PIPE (FRONT CYLINDER) 49
  - HEAD PIPE (REAR CYLINDER) 50

04 – LUBRICATION SYSTEM 51
- INSPECTION 54
  - ENGINE OIL PRESSURE 54
- TROUBLESHOOTING 54
- PROCEDURES 55
  - OIL COOLER 55
  - OIL PRESSURE SWITCH (OPS) 55
  - ENGINE OIL PRESSURE REGULATOR 56
  - OIL PUMP 57
  - ENGINE OIL STRAINER 60
  - REED VALVE 60

05 – COOLING SYSTEM 61
- GENERAL 66
- PROCEDURES 66
  - THERMOSTAT 66
  - RADIATOR 67
  - COOLANT TEMPERATURE SENSOR (CTS) 69
  - RADIATOR COOLING FAN RELAY (R1) 69
  - RADIATOR COOLING FAN 69
  - WATER PUMP HOUSING 71
  - WATER PUMP IMPELLER 72
  - WATER PUMP SHAFT AND SEALS 72
  - WATER PUMP GEARS 79

06 – MAGNETO SYSTEM 83
- PROCEDURES 85
  - MAGNETO COVER 85
  - STATOR 86
  - ROTOR 88
  - SPRAG CLUTCH 89
  - SPRAG CLUTCH GEAR 90
  - STARTER DRIVE GEARS 91

07 – INTAKE MANIFOLD 93
- PROCEDURES 94
  - PLENUM BRACKET 94
  - INTAKE MANIFOLD 94

08 – TOP END 97
- GENERAL 101
- INSPECTION 101
  - LEAK TEST 101
- PROCEDURES 104
  - VALVE COVER 104
  - ROCKER ARM 104
  - CAMSHAFT 107
  - CYLINDER HEAD 109
  - VALVE SPRINGS 112
  - VALVES 113

02 ENGINE, CVT AND GEARBOX (cont'd)

08 – TOP END (cont'd)

PROCEDURES (cont'd)

VALVE GUIDES ... 115
CYLINDER ... 116
PISTON ... 118
PISTON RINGS ... 122

09 – TIMING CHAIN ... 125

GENERAL ... 127
TROUBLESHOOTING ... 127
PROCEDURES ... 127
TIMING CHAIN TENSIONERS ... 127
CAMSHAFT TIMING GEARS ... 129
TIMING CHAIN ... 133
TIMING CHAIN GUIDE (TENSIONER SIDE) ... 135

10 – BOTTOM END ... 137

GENERAL ... 141
PROCEDURES ... 141
ENGINE DRIVE SHAFT ... 141
FRONT OIL SEAL (ENGINE DRIVE SHAFT) ... 143
REAR OIL SEAL (ENGINE DRIVE SHAFT) ... 143
PTO COVER OIL SEAL ... 144
PTO COVER ... 145
DRIVE GEARS ... 147
CRANKCASE ... 149
CRANKSHAFT ... 153

11 – CONTINUOUSLY VARIABLE TRANSMISSION (CVT) ... 161

GENERAL ... 164
PROCEDURES ... 164
CVT COVER ... 164
DRIVE BELT ... 165
DRIVE PULLEY ... 165
DRIVEN PULLEY ... 173
CVT AIR GUIDE ... 180

12 – GEARBOX AND 4X4 COUPLING UNIT ... 183

GENERAL ... 185
GEARBOX OVERVIEW ... 185
TROUBLESHOOTING ... 185
PROCEDURES ... 185
VSS (VEHICLE SPEED SENSOR) ... 185
GBPS (GEARBOX POSITION SENSOR) ... 187
4WD INDICATOR SWITCH ... 189
ACTUATOR ... 190
GEARBOX OIL SEALS ... 191
GEARBOX ... 193

13 – SHIFTER ... 209

PROCEDURES ... 210
SHIFT LEVER ... 210
SHIFTER CABLE ... 211
SHIFT PLATE ... 212

03 ELECTRONIC MANAGEMENT SYSTEM

01 – ENGINE MANAGEMENT SYSTEM (EMS) ... 215

GENERAL ... 216
SYSTEM DESCRIPTION ... 216

TABLE OF CONTENTS

03 ELECTRONIC MANAGEMENT SYSTEM (cont'd)

02 – CONTROLLER AREA NETWORK (CAN) 219
GENERAL 219
SYSTEM DESCRIPTION 219
03 – COMMUNICATION TOOLS AND B.U.D.S. 221
GENERAL 221
TROUBLESHOOTING 221
DIAGNOSTIC TIPS 221
PROCEDURES 222
MPI-2 222
B.U.D.S. SOFTWARE 223
04 – DIAGNOSTIC SYSTEM AND FAULT CODES 227
GENERAL 227
MONITORING SYSTEM 227
FAULT CODES 228
FAULT CODE DIAGNOSTIC 233
SPECIFIC FAULTS 237

04 FUEL SYSTEM

01 – INTELLIGENT THROTTLE CONTROL (iTC) 239
GENERAL 239
SYSTEM DESCRIPTION 239
SYSTEM MAIN FEATURES 239
SYSTEM OTHER FEATURES 239
PROCEDURES 240
SPORT/NORMAL SWITCH 240
SEAT BELT SWITCH 240
OVERRIDE SWITCH 240
THROTTLE ACCELERATOR SENSOR (TAS) 240
02 – ELECTRONIC FUEL INJECTION (EFI) 243
GENERAL 243
SYSTEM DESCRIPTION 243
ADJUSTMENT 244
IDLE SPEED 244
TROUBLESHOOTING 245
DIAGNOSTIC TIPS 245
PROCEDURES 245
ENGINE CONTROL MODULE (ECM) 245
FUEL INJECTOR 251
FUEL RAIL 255
THROTTLE BODY 256
THROTTLE POSITION SENSOR (TPS) 258
CRANKSHAFT POSITION SENSOR (CPS) 260
MANIFOLD AIR PRESSURE AND TEMPERATURE SENSOR (MAPTS) 261
CTS (COOLANT TEMPERATURE SENSOR) 264
03 – FUEL TANK AND FUEL PUMP 267
GENERAL 269
SYSTEM DESCRIPTION 269
INSPECTION 270
FUEL TANK LEAK TEST 270
FUEL PUMP PRESSURE TEST 270
TROUBLESHOOTING 273
FUEL SYSTEM DIAGNOSTIC FLOW CHART 273
PROCEDURES 274
FUEL HOSE AND OETIKER CLAMPS 274

04 FUEL SYSTEM (cont'd)
03 – FUEL TANK AND FUEL PUMP (cont'd)
PROCEDURES (cont'd)
FUEL TANK 274
FUEL PUMP 276
FUEL LEVEL SENDER 280
FUEL TANK VENT VALVE 281

05 ELECTRICAL SYSTEM
01 – POWER DISTRIBUTION AND GROUNDS 283
GENERAL 283
POWER DISTRIBUTION DIAGRAM 283
FUSE BOX 1 284
FUSE BOX 2 284
GROUND 284
02 – WIRING HARNESSES AND CONNECTORS 285
GENERAL 285
WIRING HARNESS AND SPLICE LOCATION 285
PROCEDURES 285
DEUTSCH CONNECTORS 285
PACKARD CONNECTORS 287
PACKARD CONNECTOR (MULTIFUNCTION GAUGE) 288
MOLEX CONNECTOR 289
FURUKAWA CONNECTOR 292
BATTERY AND STARTER CABLE TERMINALS 293
03 – IGNITION SYSTEM 295
GENERAL 295
SYSTEM DESCRIPTION 295
TROUBLESHOOTING 295
DIAGNOSTIC GUIDELINES 295
PROCEDURES 295
IGNITION SWITCH 295
IGNITION COIL 296
SPARK PLUG 297
04 – CHARGING SYSTEM 299
GENERAL 299
SYSTEM DESCRIPTION 299
INSPECTION 299
CHARGING SYSTEM OUTPUT 299
TROUBLESHOOTING 300
PROCEDURES 300
VOLTAGE REGULATOR/RECTIFIER 300
BATTERY 300
05 – STARTING SYSTEM 303
GENERAL 303
SYSTEM DESCRIPTION 303
TROUBLESHOOTING 303
DIAGNOSTIC GUIDELINES 303
PROCEDURES 304
D2 DIODE (STARTER SOLENOID) 304
START BUTTON 304
STARTER SOLENOID 305
ELECTRIC STARTER 306

TABLE OF CONTENTS

05 ELECTRICAL SYSTEM (cont'd)

06 – DIGITALLY ENCODED SECURITY SYSTEM (D.E.S.S.) 309
- GENERAL 309
  - SYSTEM DESCRIPTION 309
- TROUBLESHOOTING 309
  - DIAGNOSTIC TIPS 309
- PROCEDURES 309
  - KEY PROGRAMMING 309

07 – LIGHTS, GAUGE AND ACCESSORIES 311
- GENERAL 311
- TROUBLESHOOTING 311
  - DIAGNOSTIC TIPS 311
- PROCEDURES 311
  - CONSOLE SWITCHES 311
  - MULTIFUNCTION GAUGE (LCD AND ANALOG/DIGITAL) 312
  - 12 VOLT POWER OUTLET 315
  - HEADLIGHTS 315
  - TAILLIGHTS/BRAKE LIGHTS 317
  - WINCH 318
  - TURN SIGNALS/HAZARD(EC MODELS ONLY) 319
  - HORN (EC MODELS ONLY) 320

06 DRIVE SYSTEM

01 – FRONT DRIVE 321
- GENERAL 324
  - SYSTEM DESCRIPTION 324
- PROCEDURES 324
  - WHEEL HUB 324
  - FRONT DRIVE SHAFT 324
  - DRIVE SHAFT BOOT 325
  - FRONT DIFFERENTIAL 325
  - FRONT PROPELLER SHAFT 329
  - PROPELLER SHAFT U-JOINTS 330

02 – REAR DRIVE 333
- PROCEDURES 336
  - WHEEL HUB 336
  - DRIVE SHAFT 337
  - DRIVE SHAFT BOOT 337
  - PROPELLER SHAFT 338
  - PROPELLER SHAFT U-JOINTS 338
  - REAR FINAL DRIVE 340

07 CHASSIS

01 – WHEELS AND TIRES 345
- PROCEDURES 345
  - TIRES 345
  - WHEELS 347

02 – STEERING SYSTEM 349
- GENERAL 351
- ADJUSTMENT 351
  - DPS TORQUE OFFSET RESET 351
  - STEERING ALIGNMENT 351
- TROUBLESHOOTING 353
  - DIAGNOSTIC TIPS 353

07 CHASSIS (cont'd)
02 – STEERING SYSTEM (cont'd)
PROCEDURES 353
STEERING WHEEL 353
STEERING COLUMN 353
RACK AND PINION 355
TIE-ROD ENDS 357
KNUCKLES 357
WHEEL BEARINGS 358
03 – DYNAMIC POWER STEERING (DPS) 359
GENERAL 361
SYSTEM DESCRIPTION (FEATURES) 361
SYSTEM DESCRIPTION (COMPONENTS) 361
ADJUSTMENT 362
TORQUE OFFSET RESET 362
TROUBLESHOOTING 363
PROCEDURES 364
DPS UNIT 364
DPS COUPLER 372
04 – FRONT SUSPENSION 375
GENERAL 376
PROCEDURES 376
SHOCK ABSORBER 376
SHOCK ABSORBER BUSHINGS 377
SPRINGS 377
LOWER SUSPENSION ARM 377
UPPER SUSPENSION ARM 377
SUSPENSION ARM BUSHINGS 379
BALL JOINTS 379
05 – REAR SUSPENSION 381
GENERAL 382
PROCEDURES 382
SHOCK ABSORBERS 382
SHOCK ABSORBER BUSHINGS 383
SPRINGS 383
ANTI-SWAY BAR 384
TRAILING ARM 384
06 – AIR CONTROLLED SUSPENSION (ACS) 387
GENERAL 390
SYSTEM DESCRIPTION (OPERATION) 390
SYSTEM DESCRIPTION (FEATURES) 394
SYSTEM DESCRIPTION (COMPONENTS) 394
TROUBLESHOOTING 396
DIAGNOSTIC TIPS 396
TROUBLESHOOTING GUIDELINES 396
TROUBLESHOOTING WITH B.U.D.S. 397
PROCEDURES 398
PNEUMATIC HOSE 398
ACS RELEASE VALVE 399
ACS SOLENOID VALVE 400
SUSPENSION CONTROL MODULE (SCM) 402
ACS RELAY (R5) 405
ACS COMPRESSOR 407
ACS AIR FILTER 410
SHOCK ABSORBERS 410

TABLE OF CONTENTS

07 CHASSIS (cont'd)

07 – BRAKES 413
GENERAL 415
INSPECTION 415
BRAKE SYSTEM PRESSURE VALIDATION 415
PROCEDURES 416
BRAKE LIGHT SWITCH 416
MASTER CYLINDER 416
CALIPER 418
BRAKE PADS 419
BRAKE DISC 420

08 – BODY 421
PROCEDURES 431
PLASTIC RIVET 431
DECALS 431
UPPER CONSOLE 431
LOWER CONSOLE 431
LATERAL CONSOLE PANELS 432
GLOVE BOX REMOVAL AND INSTALLATION 432
FUEL TANK COWL 433
SEAT COVER 433

09 – CARGO BOX 435
ADJUSTMENT 441
CARGO BOX ADJUSTMENTS 441
PROCEDURES 443
CARGO BOX GAS SHOCK 443
CARGO BOX 443

10 – FRAME 445
PROCEDURES 448
CAGE 448
FRAME 449

08 TECHNICAL SPECIFICATIONS

01 – COMMANDER 800R AND 1000 451

09 WIRING DIAGRAM

01 – WIRING DIAGRAM INFORMATION 463
GENERAL 463
WIRING DIAGRAM LOCATION 463
WIRING DIAGRAM CODES 463

SAFETY NOTICE

This manual has been prepared as a guide to correctly service and repair the 2013 Can-Am™ Commander SSV as described in the model list in the *INTRODUCTION*.

This edition was primarily published to be used by mechanical technicians who are already familiar with all service procedures relating to BRP products. Mechanical technicians should attend training courses given by BRPTI.

Please note that the instructions in this manual will apply only if proper hand tools and special service tools are used.

The contents of this manual depicts parts and/or procedures applicable to a particular product at the time of writing. Service and warranty bulletins may be published to update the content of this manual. Dealer modifications that were carried out after manufacturing of the product, whether or not authorized by BRP, are not included.

In addition, the sole purpose of the illustrations throughout the manual, is to assist identification of the general configuration of the parts. They are not to be interpreted as technical drawings or exact replicas of the parts.

The use of BRP parts is most strongly recommended when considering replacement of any component. Dealer and/or distributor assistance should be sought in case of doubt.

The engines and the corresponding components identified in this document should not be utilized on product(s) other than those mentioned in this document.

It is understood that certain modifications may render use of the vehicle illegal under existing federal, provincial and state regulations.

This manual emphasizes particular information which, is denoted by the following wording and symbols:

⚠ WARNING

Indicates a potential hazard that, if not avoided, could result in serious injury or death.

⚠ CAUTION Indicates a hazardous situation which, if not avoided, could result in minor or moderate injury.

NOTICE **Indicates an instruction which, if not followed, could result in severe damage to vehicle components or other property.**

NOTE: Indicates supplementary information required to fully complete an instruction.

Although the mere reading of such information does not eliminate the hazard, your understanding of the information provided will promote its correct use.

Always observe common shop safety practice.

Unless otherwise noted, the engine must be stopped and the tether cord must be removed prior to perform any services.

Torque wrench tightening specifications must be strictly adhered to. Use the torque values and service products as in the exploded views or in the procedures when noted.

Locking devices when removed must be replaced (e.g.: locking tabs, elastic stop nuts, self-locking fasteners, cotter pins, etc.).

Hoses, cables and locking ties removed during a procedure must be reinstalled as per factory standards.

When ordering parts always refer to the specific model *PARTS CATALOGS*.

We strongly recommend that any services be carried out and/or verified by a highly skilled professional mechanic.

It is understood that this manual may be translated into another language. In the event of any discrepancy, the English version shall prevail.

BRP disclaims liability for all damages and/or injuries resulting from the improper use of the contents of this publication.

INTRODUCTION

This Shop Manual covers the following BRP made 2013 Can-Am side by side vehicles.

MODEL	ENGINE TYPE	MODEL NUMBER
Commander 800R	810	6CDA, 6CDB, 6CDC, 6TDA, 6DDA, 6DDB, 6DDC
Commander 1000	1010	6ADA, 6ADB, 6PDA, 6BDA, 6BDB, 6BDD, 6BDE, 6BDF, 6BDG, 6BDH, 6EDA, 6EDB, 6EDC, 6EDD, 6GDA, 6GDB, 6GDC, 6GDD

The information and component/system descriptions contained in this manual are correct at time of writing. BRP however, maintains a policy of continuous improvement of its products without imposing upon itself any obligation to install them on products previously manufactured.

Due to late changes, there may be some differences between the manufactured product and the description and/or specifications in this document.

BRP reserves the right at any time to discontinue or change specifications, designs, features, models or equipment without incurring obligation.

VEHICLE INFORMATION

VEHICLE IDENTIFICATION NUMBER (VIN)

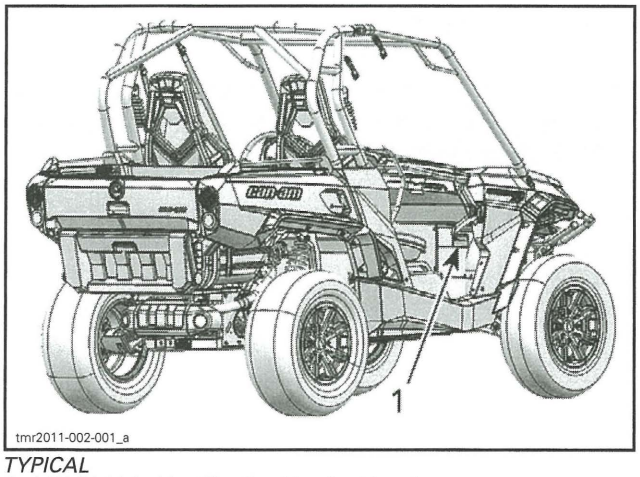

TYPICAL
1. VIN (Vehicle Identification Number) location

The VIN (Vehicle Identification Number) decal is located under the glove box on the passenger side.

VIN Decal Description

TYPICAL — VEHICLE IDENTIFICATION NUMBER LABEL
1. VIN (Vehicle Identification Number)
2. Model number
3. Manufacturing date

ENGINE IDENTIFICATION NUMBER (EIN)

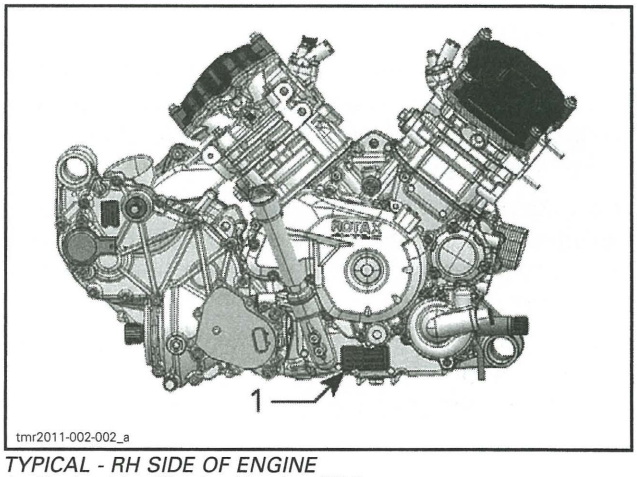

TYPICAL - RH SIDE OF ENGINE
1. Engine Identification Number (EIN)

LIFTING AND SUPPORTING THE VEHICLE

Front of Vehicle

1. Place vehicle on a flat non slippery ground.
2. Ensure vehicle shift lever is set to PARK.
3. Install an hydraulic jack under front skid plate.
4. Lift front of vehicle and install a jack stand on each side under frame section in front of the lip for center skid plate.

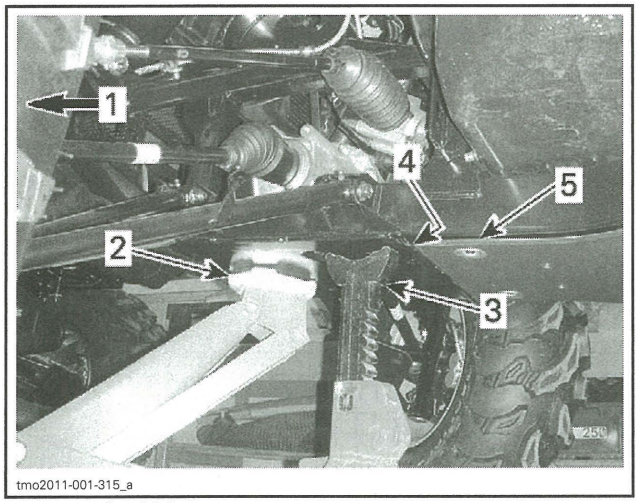

tmo2011-001-315_a

1. *Front of vehicle*
2. *Hydraulic jack*
3. *Jack stand*
4. *Lip for center skid plate*
5. *Center skid plate*

5. Lower hydraulic lift and ensure vehicle is supported safely onto both jack stands.

Rear of Vehicle

1. Place vehicle on a flat non slippery ground.
2. Activate 4WD mode.
3. Ensure vehicle shift lever is set to PARK.
4. Install a hydraulic jack under the trailer hitch.

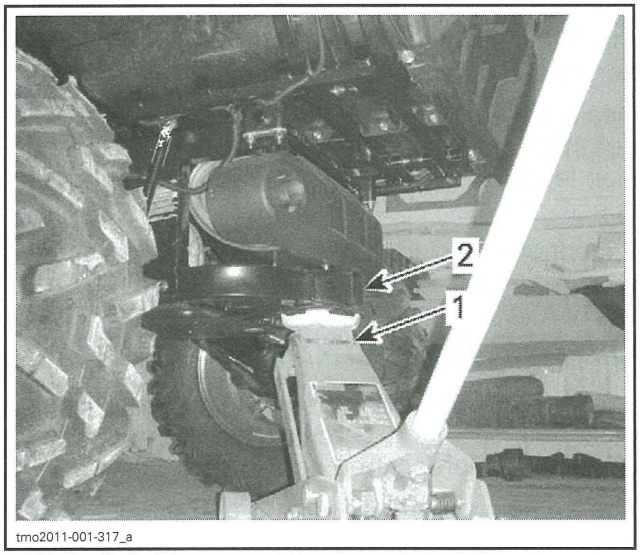

tmo2011-001-317_a

1. *Hydraulic jack*
2. *Trailer hitch*

5. Lift rear of vehicle and install a jack stand on each side under frame section in front of rear wheel.

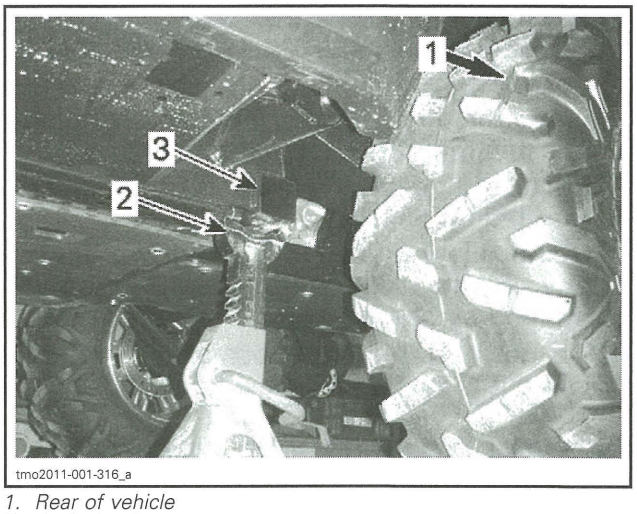

tmo2011-001-316_a

1. *Rear of vehicle*
2. *Jack stand*
3. *Frame section*

6. Lower hydraulic lift and ensure vehicle is supported safely onto both jack stands.

HOISTING THE VEHICLE

The vehicle may be lifted off the ground by the cage using a hoist and a lifting strap.

NOTICE **The lifting strap must be wrapped around the horizontal side tubes at the top of the cage, NOT fore and aft. Lifting vehicle by the fore and aft tubes of the cage can cause damage.**

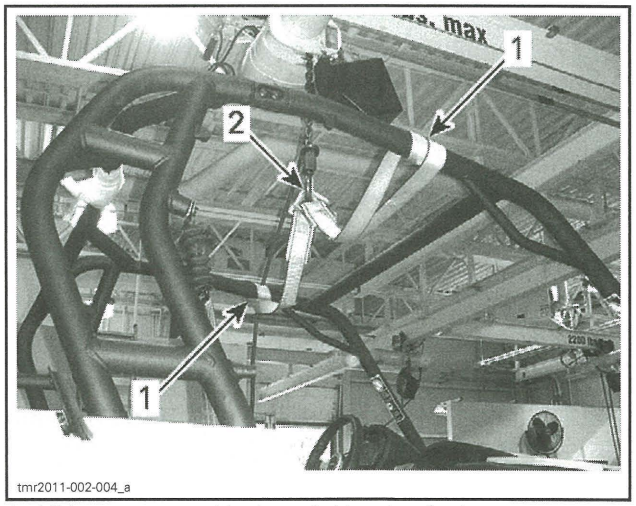

tmr2011-002-004_a

1. *Lifting strap around horizontal side tubes (top)*
2. *Hoist hook*

⚠ WARNING

- Ensure hoist and lifting strap are rated for lifting the total vehicle weight. Refer to applicable manufactures instructions.
- Ensure lifting strap is in good condition before lifting vehicle.
- Do not allow anyone in the vehicle or under any portion of the vehicle while it is suspended by a hoist.
- Do not perform any work on the vehicle while it is suspended by a hoist.

TRANSPORTING THE VEHICLE

If the vehicle needs to be transported, it should be carried inside a full size pick-up box or on a flatbed trailer of the appropriate size and capacity.

NOTICE **Do not tow this vehicle - towing can seriously damage the vehicle drive system.**

When contacting a towing or transporting service, be sure to ask for tie-down straps, a flatbed trailer, loading ramp or power ramp to safely lift and secure the vehicle. Ensure the vehicle is properly transported as specified in this section.

NOTICE **Avoid using chains to tie down the vehicle - they may damage the surface finish or plastic components.**

To load the vehicle for transport, proceed as follows:

1. Set gear shift lever to NEUTRAL (N).
2. Remove the key from the ignition switch.
3. If the vehicle is equipped with a winch, use the winch to roll the vehicle onto the transport vehicle.
4. If the vehicle is not equipped with a winch, proceed as follows:
   - 4.1 Put a strap around the lower arm of each front suspension.
   - 4.2 Attach the straps to the winch cable of the towing vehicle.
   - 4.3 Pull the vehicle on the flatbed trailers with the winch.

NOTE: Be sure to leave the gear shift lever in NEUTRAL (N).

5. Set ACS suspension setting to 1 (softest).
6. Tie down the front wheels to the front of the trailer using tire towing straps.
7. Pass a tie-down strap inside each rear wheel.
8. Firmly attach the rear wheels tie-down straps to both sides of the rear of the trailer with ratchets.
9. Ensure that both the front and rear wheels are firmly secured to the trailer.

ENGINE EMISSIONS INFORMATION

MANUFACTURER'S RESPONSIBILITY

Manufacturers of engines must determine the exhaust emission levels for each engine horsepower family and certify these engines with the United States of America Environmental Protection Agency (EPA). An emissions control information label, showing emission levels and engine specifications, must be placed on each vehicle at the time of manufacture.

DEALER RESPONSIBILITY

When servicing any vehicle that carry an emissions control information label, adjustments must be kept within published factory specifications.

Replacement or repair of any emission related component must be executed in a manner that maintains emission levels within the prescribed certification standards.

Dealers are not to modify the engine in any manner that would alter the horsepower or allow emission levels to exceed their predetermined factory specifications.

Exceptions include manufacturer's prescribed changes, such as altitude adjustments.

OWNER RESPONSIBILITY

The owner/operator is required to have engine maintenance performed to maintain emission levels within prescribed certification standards.

The owner/operator is not to, and should not allow anyone else to modify the engine in any manner that would alter the horsepower or allow emissions levels to exceed their predetermined factory specifications.

EPA EMISSION REGULATIONS

Vehicles manufactured by BRP are certified to the EPA standards as conforming to the requirements of the regulations for the control of air pollution emitted from new vehicle engines. This certification is contingent on certain adjustments being set to factory standards. For this reason, the factory procedure for servicing the product must be strictly followed and, whenever practicable, returned to the original intent of the design.

The responsibilities listed above are general and in no way a complete listing of the rules and regulations pertaining to the EPA requirements on exhaust emissions. For more detailed information on this subject, you may contact the following locations:

FOR ALL COURIER SERVICES:
U.S. Environmental Protection Agency
Office of Transportation and Air Quality
1310 L Street NW
Washington D.C. 20005

REGULAR US POSTAL MAIL:
1200 Pennsylvania Ave. NW
Mail Code 6403J
Washington D.C. 20460

INTERNET: http://www.epa.gov/otaq/

E-MAIL: otaqpublicweb@epa.gov

MANUAL INFORMATION

MANUAL PROCEDURES

Many of the procedures in this manual are interrelated. Before undertaking any task, you should read and thoroughly understand the entire section or subsection in which the procedure is contained.

⚠ WARNING

Unless otherwise specified, the engine should be turned OFF and cold for all maintenance and repair procedures.

A number of procedures throughout the book require the use of special tools. Before starting any procedure, be sure that you have on hand all required tools, or their approved equivalents.

The use of RIGHT and LEFT indications in the text are always referenced to the driving position (sitting on the vehicle).

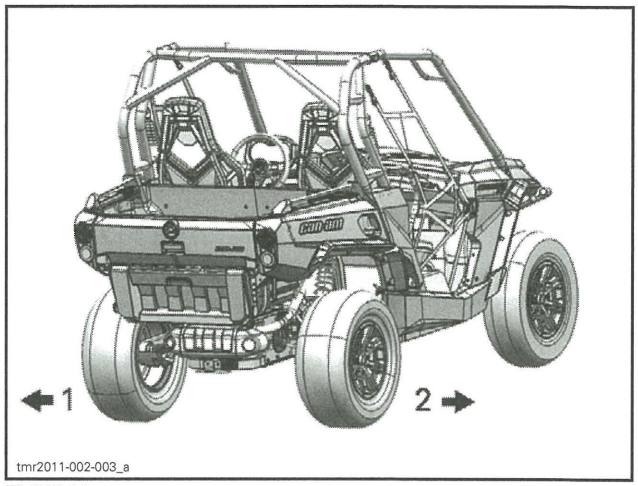

TYPICAL
1. Left
2. Right

This manual uses technical terms which may be different from the ones of the *PARTS CATALOGS*.

When ordering parts always refer to the specific model *PARTS CATALOGS*.

NOTICE **Most fasteners are metric, and most components are built with parts dimensioned using the metric system. Consult the appropriate *PARTS CATALOG* to obtain and use the correct parts and fasteners. Mismatched or incorrect fasteners could cause damage to the vehicle.**

MANUAL LAYOUT

This manual is divided into many major sections as can be seen in the main table of contents at the beginning of the manual.

Each section is divided into various subsections, and again, each subsection has one or more divisions.

Illustrations and photos show the typical construction of various assemblies and, in all cases, may not reproduce the full detail or exact shape of the parts used in a particular model vehicle. However, they represent parts which have the same or a similar function.

TYPICAL PAGE

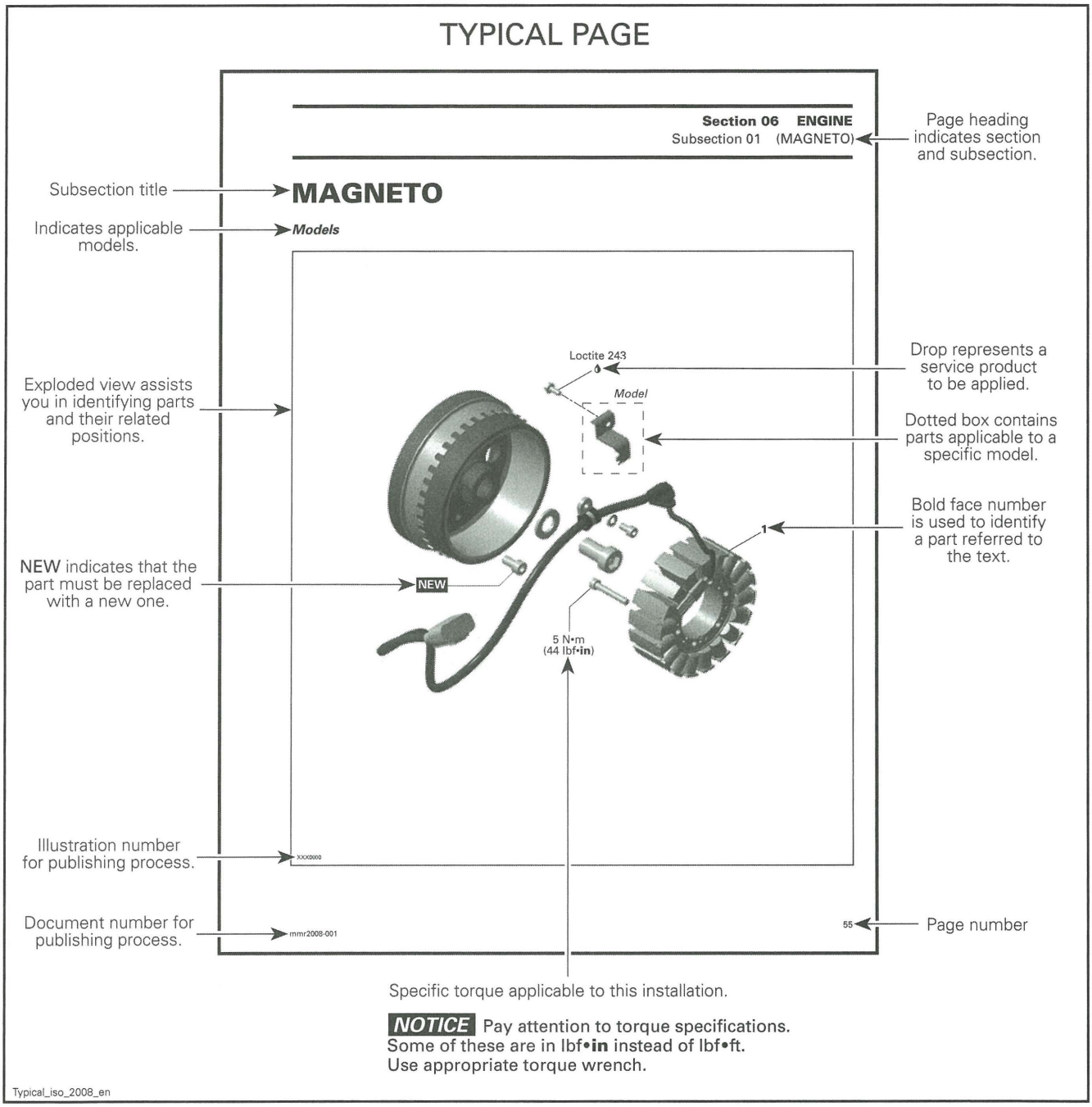

TYPICAL PAGE

Tittle in bold indicates category of information to be carried out.

GENERAL

NOTE: The following procedures can be done without removing the engine.

During assembly/installation, use the torque values and service products as in the exploded views.

Reference to a specific section or subsection.

Clean threads before applying a threadlocker. Refer to *SELF-LOCKING FASTENERS* and *LOCTITE APPLICATION* sections at the beginning of this manual for complete procedure.

⚠ WARNING

Torque wrench tightening specifications must be strictly adhered to.
Locking devices (e.g.: locking tabs, elastic stop nuts, self-locking fasteners, etc.) must be replaced with new ones.

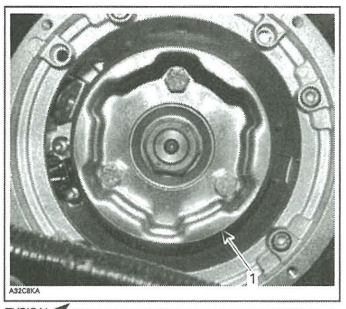

TYPICAL
1. Starting pulley

"TYPICAL" indicates a general view which may not represent exact details.

Call-outs pertaining to above illustration.

PROCEDURES

Indicates component procedures apply to.

MAGNETO FLYWHEEL

Magneto Flywheel Cleaning

Clean all metal components in a non-ferrous metal cleaner.

CAUTION: Clean magneto flywheel using only a clean cloth.

Indicates specific procedure to be carried out.

Magneto Flywheel Removal

Remove muffler, refer to the *EXHAUST SYSTEM* section.

Remove acoustic panel.

Remove rewind starter.

Remove starting pulley **no. 2**.

NOTE: To remove starting pulley bolts, hold magneto flywheel with a socket as shown.

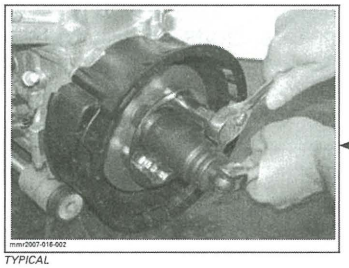

TYPICAL

Illustration always follows text to which it applies.

Models

Italic bold face typesetting indicates a procedure applicable to a specific model(s).

Remove the connecting flange retaining the rewind starter to the engine housing.

Bold face number following part name refers to exploded view at beginning of subsection.

typical_txt_2008_en

TIGHTENING TORQUE

Tighten fasteners to the torque specified in the exploded view(s) and/or in the written procedure. When a torque is not specified, refer to the following table.

⚠ WARNING

Torque wrench tightening specifications must be strictly adhered to.
Locking devices when removed (e.g.: locking tabs, elastic stop nuts, self-locking fasteners, cotter pins, etc.) must be replaced.

In order to avoid a poor assembly, tighten screws, bolts, or nuts in accordance with the following procedure:

1. Manually screw all screws, bolts and/or nuts.
2. Apply half the recommended torque value.
3. Tighten fastener to the recommended torque value.

NOTICE **Be sure to use the recommended tightening torque for the specified fastener used.**

NOTE: When possible, always apply torque on the nut.

NOTE: Always torque screws, bolts and/or nuts using a crisscross pattern when multiple fasteners are used to secure a part (eg. a cylinder head). Some parts must be torqued according to a specific sequence and torque pattern as detailed in the installation procedure.

Property class and head markings	4.8 4.8 4.8	8.8 9.8 8.8 8.8	9.8 9.8	10.9 10.9 10.9	12.9 12.9 12.9 12.9
Property class and nut markings	5 5	8 8		10 10	12 12

A00A8BS

FASTENER SIZE	FASTENER GRADE/TORQUE			
	5.8 Grade	8.8 Grade	10.9 Grade	12.9 Grade
M4	1.5 – 2 N•m (13 – 18 lbf•**in**)	2.5 – 3 N•m (22 – 27 lbf•**in**)	3.5 – 4 N•m (31 – 35 lbf•ft)	4 – 5 N•m (35 – 44 lbf•ft)
M5	3 – 3.5 N•m (27 – 31 lbf•ft)	4.5 – 5.5 N•m (40 – 47 lbf•ft)	7 – 8.5 N•m (62 – 75 lbf•ft)	8 – 10 N•m (71 – 89 lbf•ft)
M6	6.5 – 8.5 N•m (58 – 75 lbf•ft)	8 – 12 N•m (71 – 106 lbf•ft)	10.5 – 15 N•m (93 – 133 lbf•**in**)	16 N•m (142 lbf•**in**)
M8	15 N•m (133 lbf•**in**)	25 N•m (18 lbf•ft)	32 N•m (24 lbf•ft)	40 N•m (30 lbf•ft)
M10	29 N•m (21 lbf•ft)	48 N•m (35 lbf•ft)	61 N•m (45 lbf•ft)	73 N•m (54 lbf•ft)
M12	52 N•m (38 lbf•ft)	85 N•m (63 lbf•ft)	105 N•m (77 lbf•ft)	128 N•m (94 lbf•ft)
M14	85 N•m (63 lbf•ft)	135 N•m (100 lbf•ft)	170 N•m (125 lbf•ft)	200 N•m (148 lbf•ft)

FASTENER INFORMATION

NOTICE Most components in the vehicles are built with parts dimensioned in the metric system. Most fasteners are metric and must not be replaced by customary fasteners or vice-versa. Mismatched or incorrect fasteners could cause damage to the vehicle or possible personal injury.

SELF-LOCKING FASTENERS PROCEDURE

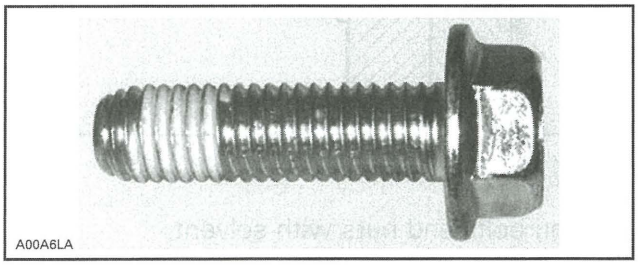

TYPICAL — SELF-LOCKING FASTENER

The following describes common procedures used when working with self-locking fasteners.

Use a metal brush or a tap to properly clean a threaded hole, then use a solvent. Allow the solvent time to act, approximately 30 minutes, then wipe off. Solvent utilization is to ensure proper adhesion of the product used for locking the fastener.

LOCTITE® APPLICATION PROCEDURE

The following describes common procedures used when working with Loctite products.

NOTE: Always use proper strength Loctite product as recommended in this shop manual.

Threadlocker Application for Uncovered Holes (Bolts and Nuts)

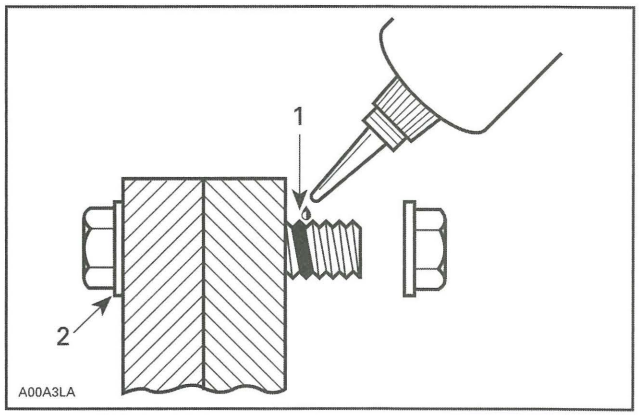

1. Apply here
2. Do not apply

1. Clean threads (bolt and nut) with solvent.
2. Apply LOCTITE PRIMER N (P/N 293 800 041) on threads and allow to dry.
3. Choose proper strength Loctite threadlocker.
4. Fit bolt in the hole.
5. Apply a few drops of threadlocker at proposed tightened nut engagement area.
6. Position nut and tighten as required.

Threadlocker Application for Blind Holes

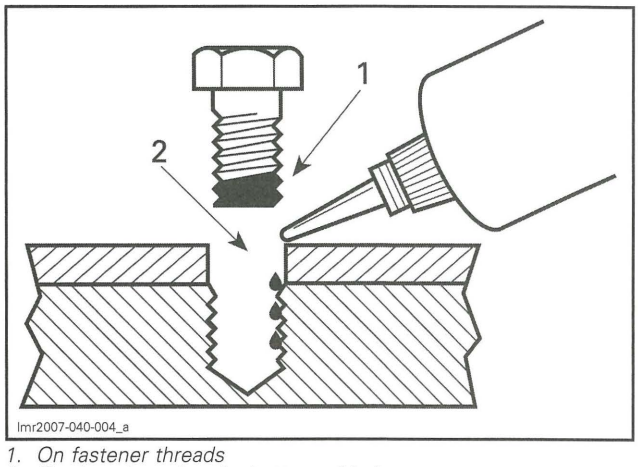

1. On fastener threads
2. On threads and at the bottom of hole

1. Clean threads (bolt and hole) with solvent.
2. Apply LOCTITE PRIMER N (P/N 293 800 041) on threads (bolt and nut) and allow to dry for 30 seconds.
3. Choose proper strength Loctite threadlocker.

4. Apply several drops along the threaded hole and at the bottom of the hole.
5. Apply several drops on bolt threads.
6. Tighten as required.

Threadlocker Application for Stud Installation in Blind Holes

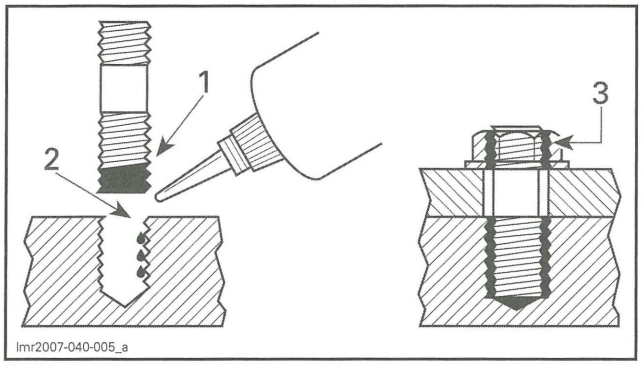

1. On stud threads
2. On threads and in the hole
3. On retaining nut threads

1. Clean threads (stud and hole) with solvent.
2. Apply LOCTITE PRIMER N (P/N 293 800 041) on threads and allow to dry.
3. Put 2 or 3 drops of proper strength Loctite threadlocker on female threads and in hole.

NOTE: To avoid a hydro lock situation, do not apply too much Loctite.

4. Apply several drops of proper strength Loctite on stud threads.
5. Install stud.
6. Install cover, part, etc.
7. Apply a few drops of proper strength Loctite on uncovered stud threads.
8. Install and tighten retaining nut(s) as required.

Threadlocker Application for Pre-Assembled Parts

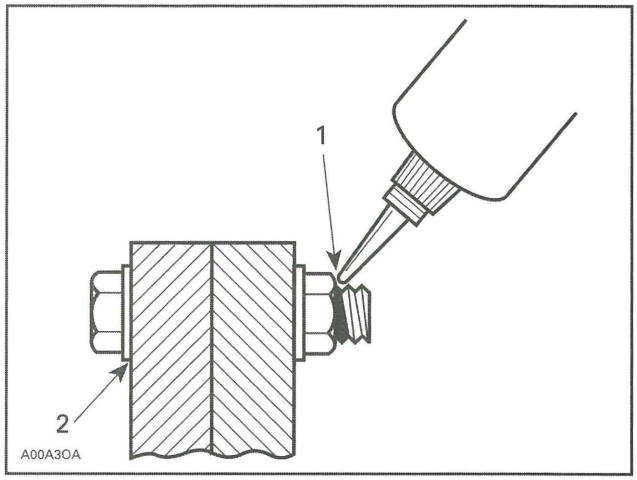

1. Apply here
2. Do not apply

1. Clean bolts and nuts with solvent.
2. Assemble components.
3. Tighten nuts.
4. Apply a few drops of proper strength Loctite on bolt/nut contact surfaces.
5. Avoid touching metal with tip of flask.

NOTE: For preventive maintenance on existing equipment, retighten nuts and apply proper strength Loctite on bolt/nut contact surfaces.

Threadlocker Application for an Adjustment Screw

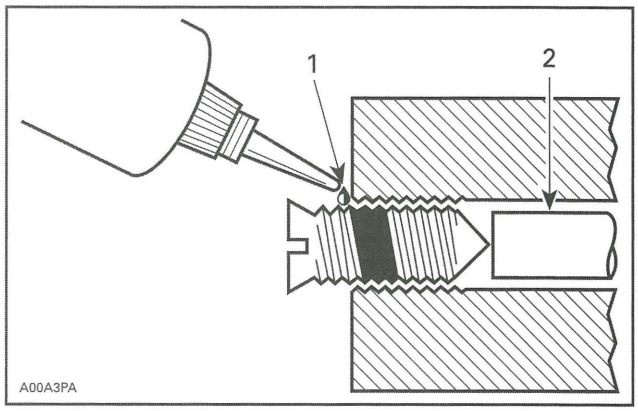

1. Apply here
2. Plunger

1. Adjust screw to proper setting.
2. Apply a few drops of proper strength Loctite threadlocker on screw/body contact surfaces.
3. Avoid touching metal with tip of flask.

NOTE: If it is difficult to readjust, heat screw with a soldering iron (232°C (450°F)).

Application for Stripped Thread Repair

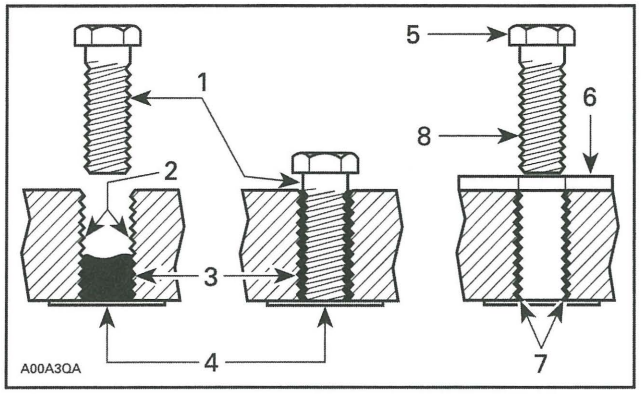

1. *Release agent*
2. *Stripped threads*
3. *Form-A-Thread*
4. *Tapes*
5. *Cleaned bolt*
6. *Plate*
7. *New threads*
8. *Threadlocker*

Standard Thread Repair

Follow instructions on Loctite FORM-A-THREAD 81668 package.

If a plate is used to align bolt:

1. Apply release agent on mating surfaces.
2. Put waxed paper or similar film on the surfaces.
3. Twist bolt when inserting it to improve thread conformation.

NOTE: NOT intended for engine stud repairs.

Repair of Small Holes/Fine Threads

Option 1: Enlarge damaged hole, then follow *STANDARD THREAD REPAIR* procedure.

Option 2: Apply FORM-A-THREAD on the screw and insert in damaged hole.

Permanent Stud Installation (Light Duty)

1. Use a stud of the desired thread length.
2. DO NOT apply release agent on stud.
3. Follow Standard Thread Repair procedure.
4. Allow 30 minutes for Loctite FORM-A-THREAD to cure.
5. Complete part assembly.

Gasket Compound Application

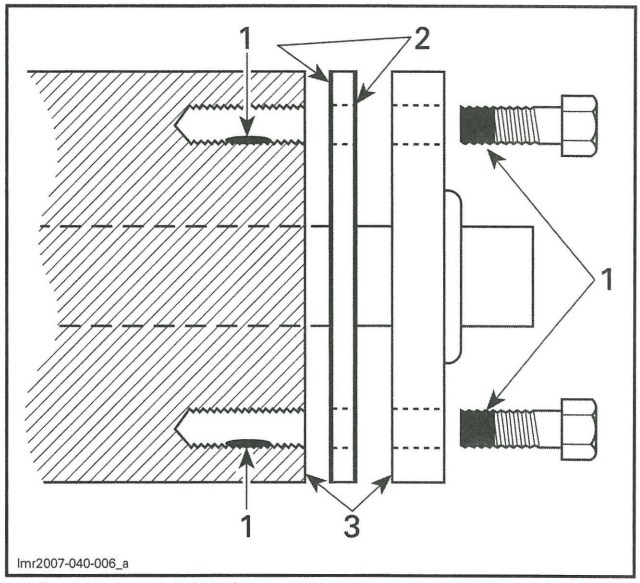

1. *Proper strength Loctite*
2. *Loctite Primer N (P/N 293 800 041) and Gasket Eliminator 518 (P/N 293 800 038) on both sides of gasket*
3. *Loctite Primer N only*

1. Remove old gasket and other contaminants using LOCTITE CHISEL (GASKET REMOVER) (P/N 413 708 500). Use a mechanical means only if necessary.

NOTE: Avoid grinding.

2. Clean both mating surfaces with solvent.
3. Spray Loctite Primer N on both mating surfaces and on both sides of gasket and allow to dry 1 or 2 minutes.
4. Apply LOCTITE 518 (P/N 293 800 038) on both sides of gasket, using a clean applicator.
5. Place gasket on mating surfaces and assemble parts immediately.

NOTE: If the cover is bolted to blind holes, apply proper strength Loctite in the hole and on threads. Tighten fastener.

If holes are sunken, apply proper strength Loctite on bolt threads.

6. Tighten as usual.

Threadlocker Application for Mounting on a Shaft

Mounting with a Press

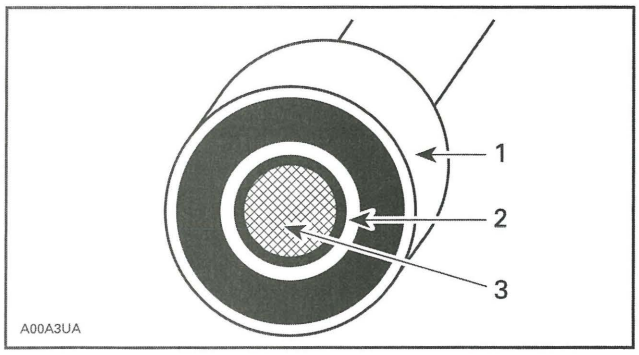

1. Bearing
2. Proper strength Loctite
3. Shaft

1. Clean shaft external contact surface.
2. Clean internal contact surface of part to be installed on shaft.
3. Apply a strip of proper strength Loctite on circumference of shaft contact surface at insertion or engagement point.

NOTE: Retaining compound is always forced out when applied on shaft.

4. DO NOT use antiseize Loctite or any similar product.
5. No curing period is required.

Mounting in Tandem

1. Apply retaining compound on internal contact surface (bore) of parts to be installed.
2. Continue parts assembly as per previous illustration.

Threadlocker Application for Case-In Components (Metallic Gaskets)

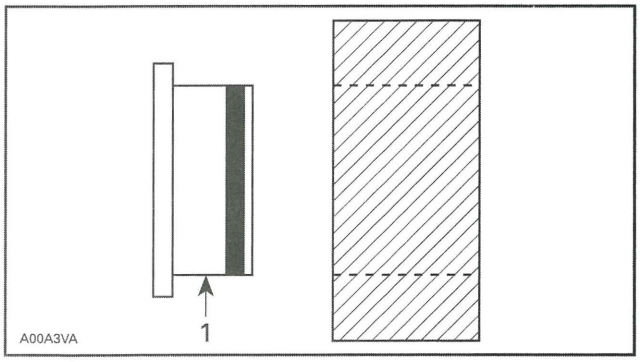

1. Proper strength Loctite

1. Clean inner housing diameter and outer gasket diameter.
2. Spray housing and gasket with LOCTITE PRIMER N (P/N 293 800 041).
3. Apply a strip of proper strength Loctite on leading edge of outer metallic gasket diameter.

NOTE: Any Loctite product can be used here. A low strength liquid is recommended as normal strength and gap are required.

4. Install according to standard procedure.
5. Wipe off excess product.
6. Allow 30 minutes for product to cure.

NOTE: Normally used on worn-out housings to prevent leaking or sliding.

It is generally not necessary to remove gasket compound applied on outer gasket diameter.

SERVICE TOOLS INDEX

ADAPTER HOSE
(P/N 529 035 652)

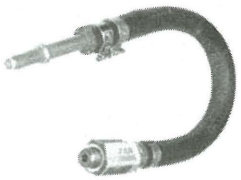

Page: 54

BACK PROBE TEST WIRES
(P/N 529 036 063)

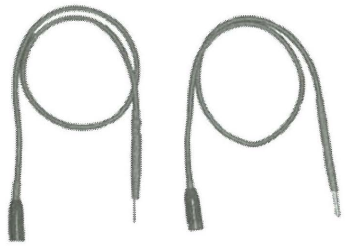

Page: 87

BACKLASH MEASUREMENT TOOL
(P/N 529 035 665)

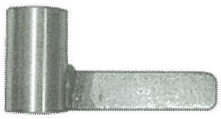

Page: 326, 340

BLIND HOLE BEARING PULLER SET
(P/N 529 036 117)

Page: 199

BLIND HOLE PULLER KIT
(P/N 529 036 056)

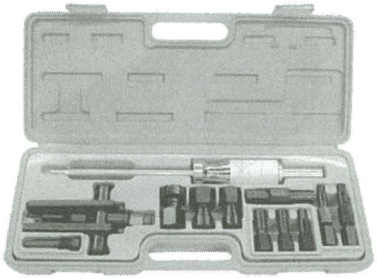

Page: 77

CAMSHAFT TIMING TOOL
(P/N 529 036 231)

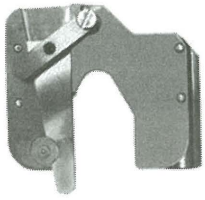

Page: 129–130

CLUTCH HOLDER
(P/N 529 036 238)

Page: 166, 173, 179

CLUTCH PULLER
(P/N 529 035 746)

Page: 166

COUNTERSHAFT OIL SEAL PUSHER
(P/N 529 036 222)

Page: 192

CRANKCASE SUPPORT MAG/PTO
(P/N 529 036 031)

Page: 151

CRANKSHAFT LOCKING BOLT
(P/N 529 035 617)

Page: 88, 117, 154

CRANKSHAFT PROTECTOR
(P/N 529 036 034)

Page: 88

CRANKSHAFT TDC POSITION TOOL
(P/N 529 036 201)

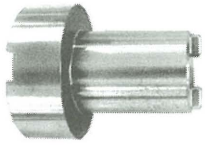

Page: 133

SERVICE TOOLS INDEX

CRIMPING TOOL (HEAVY GAUGE WIRE)
(P/N 529 035 730)

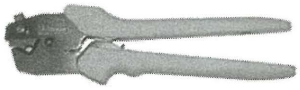

Page: 293

CV BOOT CLAMP PLIER
(P/N 529 036 120)

Page: 325, 337

CV JOINT EXTRACTOR
(P/N 529 036 005)

Page: 325, 337

DIGITAL INDUCTION TACHOMETER
(P/N 529 014 500)

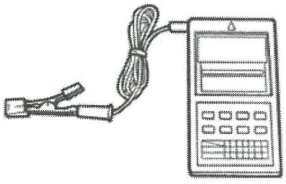

Page: 244

DISCONNECT TOOL
(P/N 529 035 714)

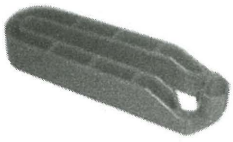

Page: 54

DPS COUPLER PULLER
(P/N 529 036 247)

Page: 373

DPS POSITIONING ADAPTOR
(P/N 529 036 248)

Page: 372

DRIVE SHAFT OIL SEAL INSTALLER
(P/N 529 036 028)

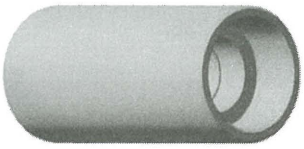

Page: 143–144

DRIVE SHAFT OIL SEAL PROTECTOR
(P/N 529 036 029)

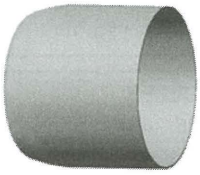

Page: 142

ECM ADAPTER TOOL
(P/N 529 036 166)

Page: 188, 247, 259, 261–264, 277, 291, 297, 304, 416

ECM TERMINAL REMOVER 2.25
(P/N 529 036 175)

Page: 291

ECM TERMINAL REMOVER 3.36
(P/N 529 036 174)

Page: 291

ENGINE LEAK DOWN TEST KIT
(P/N 529 035 661)

Page: 103

ENGINE LIFTING TOOL
(P/N 529 036 022)

Page: 41

SERVICE TOOLS INDEX

FLUKE 115 MULTIMETER
(P/N 529 035 868)

Page: 86–87, 186, 190, 247, 253, 259, 262–263, 276, 296, 305, 364, 366, 400–404, 406–408

FUEL HOSE ADAPTER
(P/N 529 036 023)

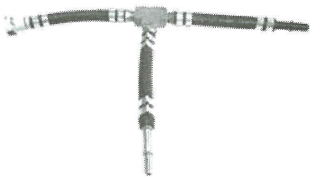

Page: 271

HANDLE
(P/N 420 877 650)

Page: 78, 192

LARGE HOSE PINCHER
(P/N 529 032 500)

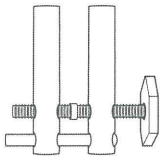

Page: 66–67

MAGNETO PULLER
(P/N 529 035 748)

Page: 88

MPI-2 DIAGNOSTIC CABLE
(P/N 710 000 851)

Page: 223

MPI-2 INTERFACE CARD
(P/N 529 036 018)

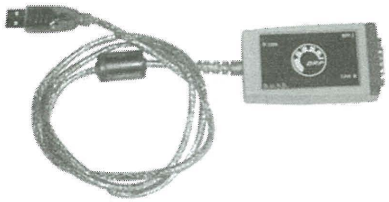

Page: 223

OETIKER PLIERS
(P/N 295 000 070)

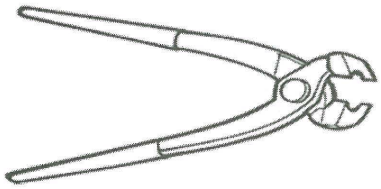

Page: 256, 274, 431

OIL SEAL INSTALLER (GEARBOX)
(P/N 529 035 758)

Page: 192

OIL SEAL INSTALLER
(P/N 529 036 204)

Page: 193

OIL SEAL PUSHER
(P/N 529 035 757)

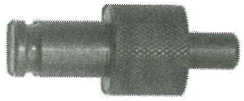

Page: 78

PISTON CIRCLIP INSTALLER
(P/N 529 035 921)

Page: 121

PISTON CIRCLIP INSTALLER
(P/N 529 036 153)

Page: 121

PISTON RING COMPRESSOR
(P/N 529 035 919)

Page: 117

PITMAN ARM JIG
(P/N 529 036 225)

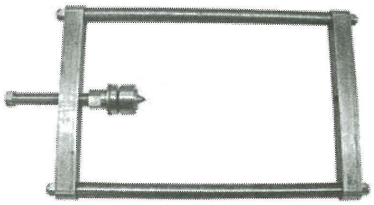

Page: 372–373

SERVICE TOOLS INDEX

PLAIN BEARING REMOVER/INSTALLER
(P/N 529 035 917)

Page: 151

PLAIN BEARING REMOVER/INSTALLER
(P/N 529 036 032)

Page: 146

PRESSURE GAUGE
(P/N 529 035 709)

Page: 54, 271

PTO COVER OIL SEAL INSTALLER
(P/N 529 036 033)

Page: 145

PULLER/LOCKING TOOL
(P/N 529 036 098)

Page: 165, 180

ROTARY SEAL PUSHER PLATE
(P/N 529 036 130)

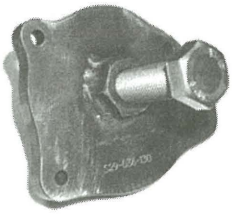

Page: 75

SEAL PUSHER
(P/N 529 035 766)

Page: 75, 79

SPANNER SOCKET
(P/N 529 035 649)

Page: 328, 342

SPRING COMPRESSOR
(P/N 529 036 184)

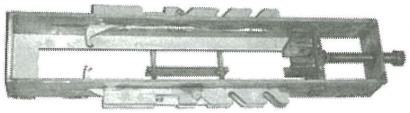

Page: 383

STEERING ALIGNMENT TOOL
(P/N 529 036 059)

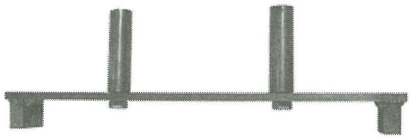

Page: 352

TDC DIAL INDICATOR
(P/N 414 104 700)

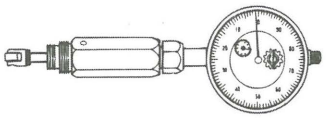

Page: 103

TEST CAP
(P/N 529 035 991)

Page: 20

VACUUM/PRESSURE PUMP
(P/N 529 021 800)

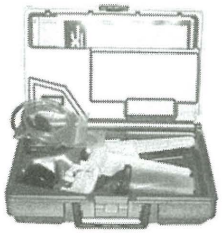

Page: 20, 31, 270, 281

VALVE GUIDE INSTALLER
(P/N 529 036 140)

Page: 116

VALVE GUIDE REMOVER 5 MM
(P/N 529 035 924)

Page: 115

VALVE SPRING COMPRESSOR CUP
(P/N 529 035 764)

Page: 112

VALVE SPRING COMPRESSOR
(P/N 529 035 724)

Page: 112

BREAK-IN INSPECTION

This vehicle should be serviced after the first 10 hours or 300 km (200 mi) of operation, whichever comes first, by an authorized Can-Am dealer. The break-in inspection is very important and must not be neglected.

To clear the MAINTENANCE SOON reminder message in the multifunction gauge, refer to *LIGHTS, GAUGE AND ACCESSORIES* subsection.

BREAK-IN INSPECTION CHART	INSPECT	CLEAN	LUBRICATE	TIGHTEN	ADJUST	REPLACE
ENGINE						
Engine oil and filter						X
Valve clearance	X				X	
Engine Air Filter	X					
Engine seals	X					
Engine mounting fasteners	X					
Exhaust system	X					
COOLING SYSTEM						
Radiator/cooling system leak (leak test)	X	X				
FUEL SYSTEM						
Fuel lines, fuel rails, connections, check valves and fuel tank leak test	X					
ELECTRICAL SYSTEM						
Battery connections	X					
CVT TRANSMISSION						
CVT air inlet/outlet	X	X				
CVT air filter	X	X				
GEARBOX						
Gearbox oil						X
Vehicle speed sensor		X				
DRIVE SYSTEM						
Front differential/rear final drive oil						X
Front differential/rear final drive (seals and vents)	X					
Front and rear propeller shaft joints	X		X			

BREAK-IN INSPECTION CHART	INSPECT	CLEAN	LUBRICATE	TIGHTEN	ADJUST	REPLACE
WHEEL						
Wheel nuts/studs	X			X		
Wheel bearings	X			X		
Wheel beadlock (X model)				X		
STEERING SYSTEM						
Steering system (column, bearing, etc.)	X					
Front wheel alignment	X					
BRAKES						
Brake fluid	X					
OCCUPANT RESTRAINT SYSTEM						
Seat belts	X					
Side nets	X					
BODY/CHASSIS						
Cage fasteners	X					
Upper and lower tailgates latches	X					
Seats latch	X					

PERIODIC MAINTENANCE SCHEDULE

Maintenance is very important for keeping the vehicle in a safe operating condition. Proper maintenance is the owner's responsibility. The vehicle should be serviced as per the maintenance schedule.

To clear the **MAINTENANCE SOON** reminder message in the multifunction gauge, refer to *LIGHTS, GAUGE AND ACCESSORIES* subsection.

⚠ WARNING

Failure to properly maintain the vehicle according to the maintenance schedule and procedures can make it unsafe to operate.

EVERY 750 KM (500 MI) OR 25 HOURS OF OPERATION (WHICHEVER COMES FIRST)
Replace engine air filter (when riding in severe conditions)
Clean the CVT air inlet/outlet
Inspect and clean the CVT air filter
Inspect the brake pads
Inspect and clean ACS compressor air filter (more often under severe use such as dusty area, sand, snow, wet or muddy conditions)
Tighten the wheel lug nuts
Inspect the drive shaft boots and protectors
Inspect passenger grab handles condition
Inspect hitch condition
Inspect driver and passenger seat latch operation
Inspect tailgates latch operation

EVERY 1 500 KM (1,000 MI) OR 50 HOURS OF OPERATION (WHICHEVER COMES FIRST)
Replace the engine air filter (when riding in normal conditions)
Verify battery condition
Inspect the front differential/rear final drive oil level
Inspect the drive shaft joints condition
Inspect the front/rear propeller shaft joint condition
Grease the front/rear propeller shaft joints
Inspect the tie rod ends
Inspect shock absorbers for any leaks

EVERY 1 500 KM (1,000 MI) OR 50 HOURS OF OPERATION (WHICHEVER COMES FIRST)
Lubricate shock absorber spherical bearings (X model)
Inspect and lubricate front suspension arms
Replace ACS compressor air filter (more often under severe use such as dusty area, sand, snow, wet or muddy conditions)

EVERY 3 000 KM (2,000 MI) OR 100 HOURS OF OPERATION OR 1 YEAR (WHICHEVER COMES FIRST)
Inspect seat belts (check for any damages and proper operation)
Inspect side nets (check for any damages and they must buckle properly)
Replace the engine oil and filter
Inspect and adjust the valve clearance
Inspect and clean the muffler spark arrester
Check engine coolant strength
Inspect throttle body
Clean the fuel pump pre-filter
Inspect the fuel pump pressure
Replace fuel vent breather filter
Inspect the drive belt
Inspect, clean and lubricate the drive and driven pulleys (including the one-way bearing)
Inspect the gearbox oil level and condition
Inspect wheel bearings
Inspect the steering system (column, bearing, etc.)
Inspect and clean the brake system
Inspect frame for any damage
Replace rear final drive oil
Inspect centrifugal levers and rollers of drive pulley

EVERY 6 000 KM (4,000 MI) OR 200 HOURS OF OPERATION OR 2 YEARS (WHICHEVER COMES FIRST)
Replace the engine coolant
Verify the cooling system and proceed with a cooling system leak test and a pressure cap test
Verify the fuel system and perform a leak test
Replace Spark plugs
Replace the front differential oil
Replace gearbox oil
Clean the vehicle speed sensor
Replace the brake fluid

PERIODIC MAINTENANCE PROCEDURES

SERVICE TOOLS

Description	Part Number	Page
TEST CAP	529 035 991	20
VACUUM/PRESSURE PUMP	529 021 800	20, 31

SERVICE PRODUCTS

Description	Part Number	Page
BRAKE FLUID	293 600 131	31
BRP PREMIXED COOLANT	219 700 362	15
COSMO RUBBER GREASE	293 550 055	30
LOCTITE 767 (ANTISEIZE LUBRICANT)	293 800 070	25
SUSPENSION GREASE	293 550 033	29
XPS 4-STROKE SYNTH. BLEND OIL (SUMMER)	293 600 121	14
XPS 4-STROKE SYNTHETIC OIL (ALL CLIMATE)	293 600 112	14
XPS BRAKES AND PARTS CLEANER	219 701 705	24, 30
XPS SYNTHETIC GEAR OIL (75W 140)	293 600 140	24, 27
XPS SYNTHETIC GEAR OIL (75W 90)	293 600 043	26
XPS SYNTHETIC GREASE	293 550 010	30

GENERAL

This subsection provides:
- Fluid level verifications
- Maintenance procedures.

The following systems should be serviced according to the *PERIODIC MAINTENANCE SCHEDULE*.

PROCEDURES

ENGINE (AIR INTAKE SYSTEM)

Air Filter Replacement

NOTICE **Never modify the air intake system. Otherwise, engine performance degradation or damage can occur. The engine is calibrated to operate specifically with these components.**

Air Filter Replacement Guideline

Air filter replacement should be adjusted according to riding conditions as it is critical to ensure proper engine performance and life span.

Air filter replacement frequency must be increased for the following dusty conditions:
- Riding on dry sand
- Riding on dry dirt covered surfaces
- Riding on dry gravel roads or similar conditions.

NOTE: Riding in a group in these conditions would increase even more the air filter replacement requirement.

Air Filter Removal

Remove service cover.

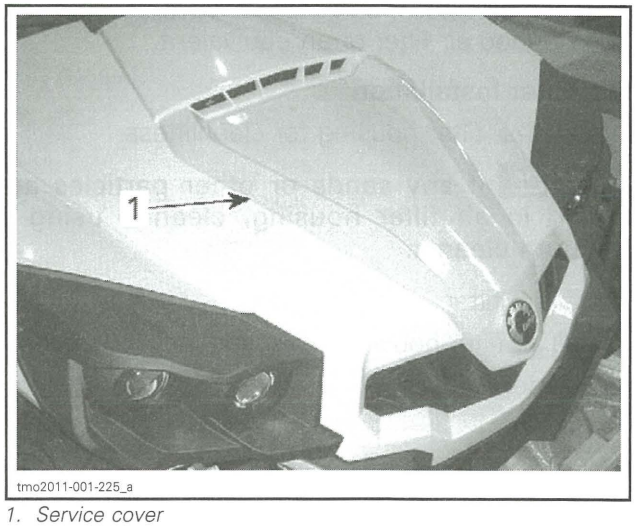

1. Service cover

Release clamps and remove air filter housing cover.

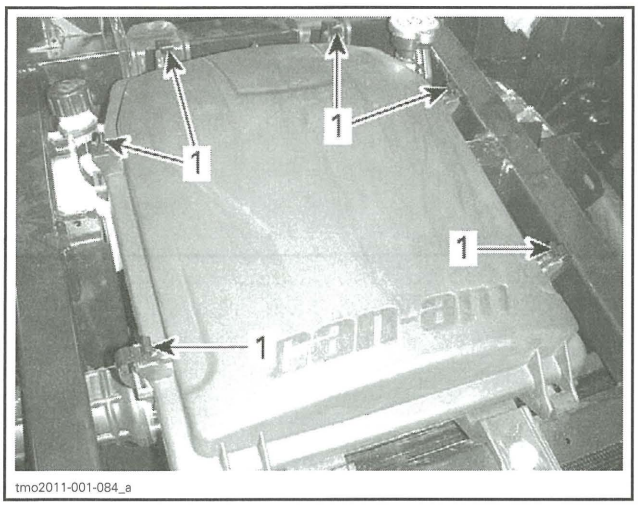

tmo2011-001-084_a

1. Release clamps

Remove air filter.

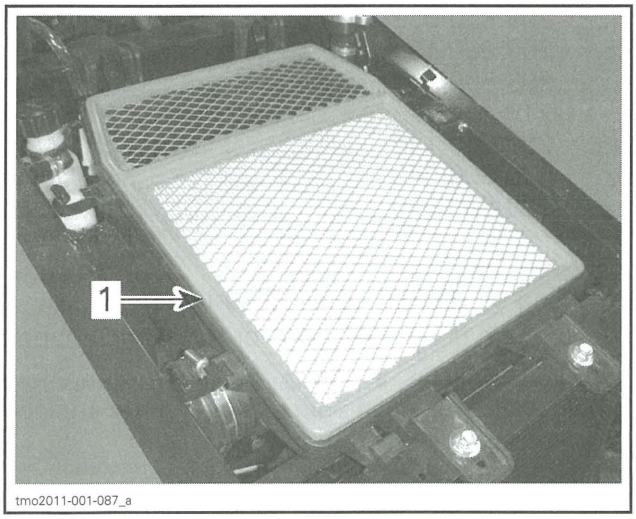

tmo2011-001-087_a

1. Air filter

Replace air filter if clogged. Always use the recommended air filter or an equivalent.

Air Filter Installation

Inspect air filter housing for cleanliness.

NOTICE **If any sands or other particles are found in air filter housing, clean it using a vacuum cleaner.**

Install air filter.

Install air filter housing cover and latch all clamps.

Install service cover.

ENGINE (EXHAUST SYSTEM)

Muffler Spark Arrester Cleaning and Inspection

⚠ **CAUTION** **Never perform this operation immediately after the engine has been running as exhaust system is very hot.**

Remove the muffler cover.

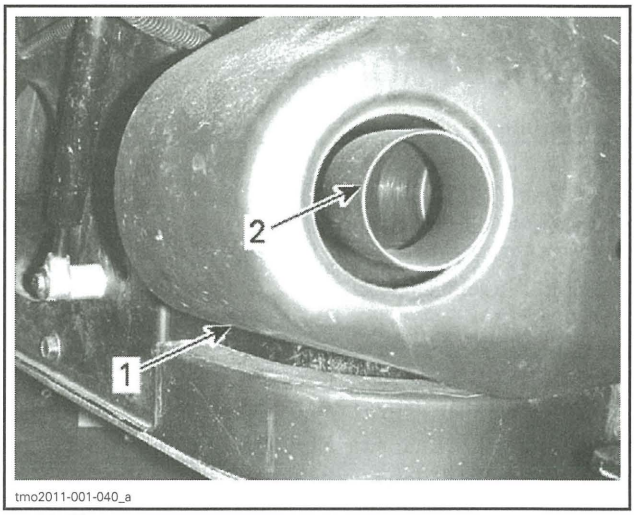

tmo2011-001-040_a

1. Muffler cover
2. Exhaust tail pipe

Remove and discard the tail pipe retaining screws.

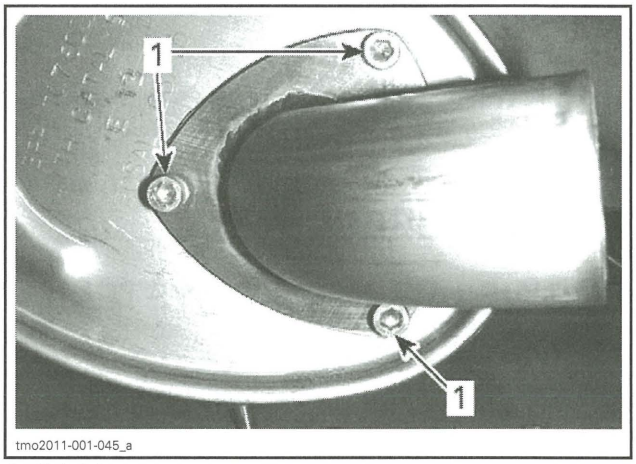

tmo2011-001-045_a

1. Retaining screws

Remove exhaust tail pipe, gasket (discard) and spark arrester.

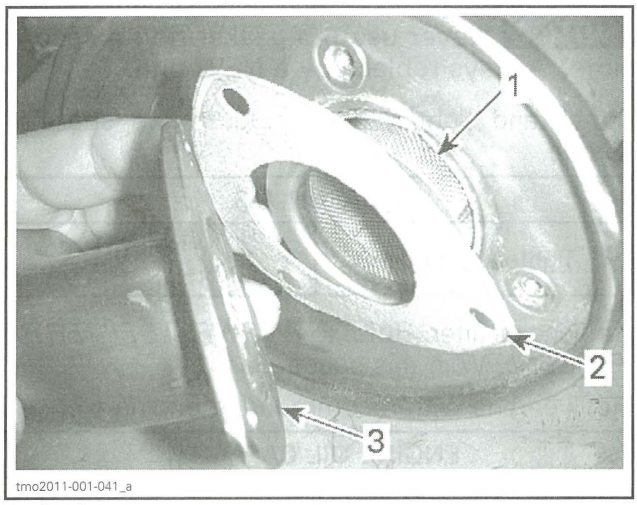

1. Spark arrester
2. Gasket
3. Exhaust tail pipe

Remove carbon deposits from the spark arrester using a brush.

NOTICE Use a soft brush and be careful to avoid damaging spark arrester mesh.

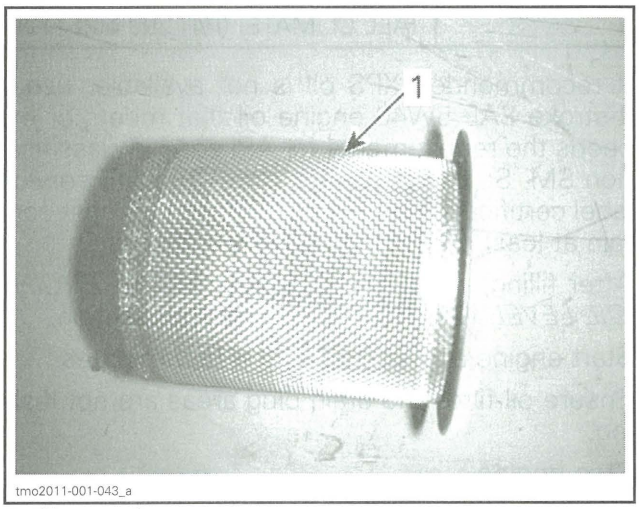

1. Clean spark arrester

Inspect mesh of spark arrester for any damage. Replace as required.

Inspect spark arrester chamber in muffler. Clean off any debris as required.

For installation, reverse the removal procedure. However pay attention to the following.

Install new gasket and retaining screws.

TAIL PIPE RETAINING SCREWS	
Tightening torque	11 N•m ± 1 N•m (97 lbf•**in** ± 9 lbf•**in**)

ENGINE (LUBRICATION SYSTEM)

Engine Oil Level Verification

NOTICE Operating the engine with an improper level may severely damage engine.

With vehicle on a level surface and engine cold, check the oil level as follows:

1. Remove passenger seat.
2. Unscrew dipstick then remove it and wipe clean.

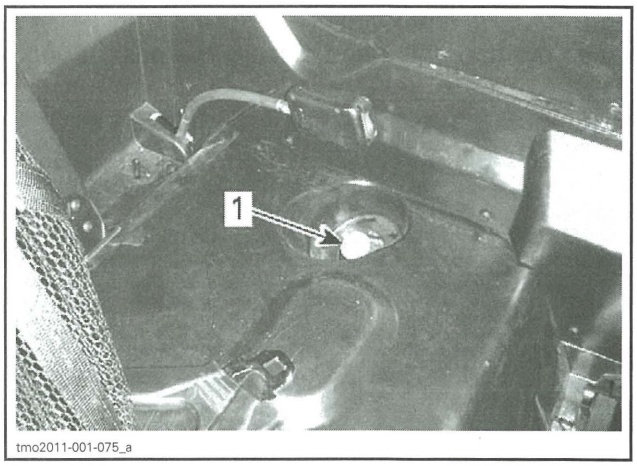

1. Dipstick

3. Reinstall dipstick, screw in it completely.
4. Remove dipstick and check oil level. It should be near or equal to the upper mark.

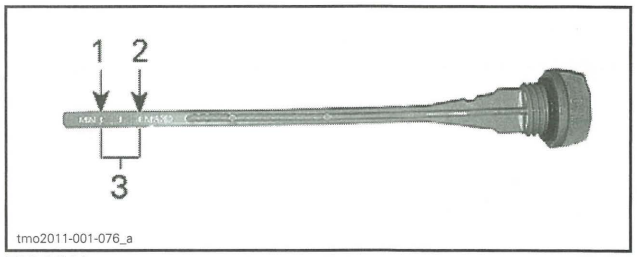

TYPICAL
1. MIN.
2. MAX.
3. Operating range

To add oil, remove the dipstick. Place a funnel into the dipstick tube.

Add a small amount of recommended oil and recheck oil level.

Repeat the above procedures until oil level reaches the dipstick's upper mark.

NOTE: Do not overfill. Wipe off any spillage.

Properly tighten dipstick.

Install passenger seat.

Engine Oil Change

Place vehicle on a level surface.

Oil change and oil filter replacement should be done with a warm engine.

⚠ CAUTION The engine oil can be very hot. Wait until engine oil is warm.

Ensure vehicle is on a level surface.

Remove dipstick.

Place a drain pan under the engine drain plug area.

Clean the drain plug area.

Unscrew drain plug and discard the gasket ring.

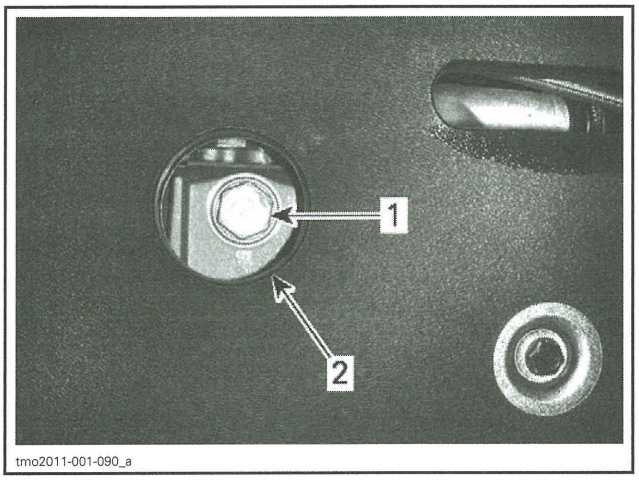

DRAIN PLUG ACCESS
1. *Oil drain plug*
2. *Skid plate*

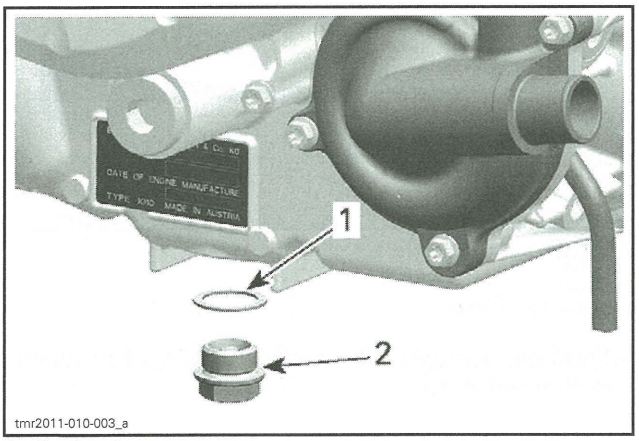

1. *Gasket ring*
2. *Drain plug*

Allow oil to drain completely from the crankcase.

Clean the magnetic drain plug from metal shavings and residue. Presence of debris gives an indication of internal engine damage.

Install a NEW gasket ring on the drain plug.

NOTICE Never use the gasket ring a second time. Always replace by a NEW one.

Install and tighten drain plug to the specified torque.

DRAIN PLUG	
Tightening torque	30 N•m ± 2 N•m (22 lbf•ft ± 1 lbf•ft)

Replace oil filter. Refer to *ENGINE OIL FILTER REPLACEMENT* in this subsection.

Refill engine with recommended engine oil.

ENGINE OIL CAPACITY
2.2 L (2.32 qt (U.S. liq.))

RECOMMENDED ENGINE OIL	
SEASON	TYPE
Summer	XPS 4-STROKE SYNTH. BLEND OIL (SUMMER) (P/N 293 600 121)
Winter	XPS 4-STROKE SYNTHETIC OIL (ALL CLIMATE) (P/N 293 600 112)

If recommended XPS oil is not available, use a 4-stroke SAE 5W40 engine oil that meets or exceeds the requirements for API service classification SM, SL or SJ. Always check the API service label certification on the oil container, it must contain at least one of the above standards.

After filling, check the oil level, refer to *ENGINE OIL LEVEL VERIFICATION* in this subsection.

Start engine and let it idle for a few minutes.

Ensure oil filter and drain plug areas are not leaking.

Stop engine.

Wait a while to allow oil to flow down to crankcase, then check oil level again.

Dispose oil and filter as per your local environmental regulations.

Engine Oil Filter Replacement

Oil Filter Removal

Clean oil filter area.

Remove:
- Oil filter cover screws
- Oil filter cover
- O-ring
- Oil filter.

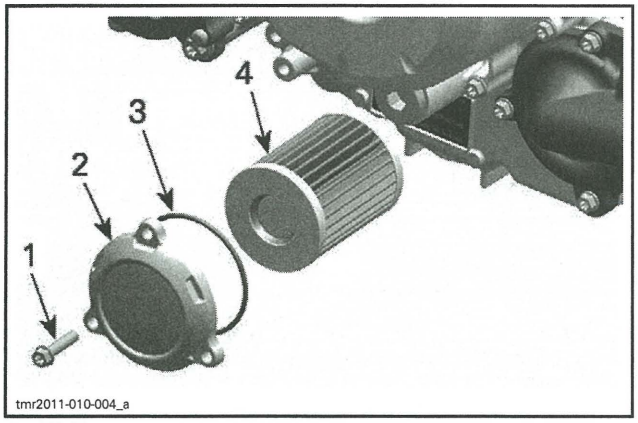

1. *Oil filter cover screw*
2. *Oil filter cover*
3. *O-ring*
4. *Oil filter*

Oil Filter Installation

Check and clean the oil filter inlet and outlet area for dirt and other contaminations.

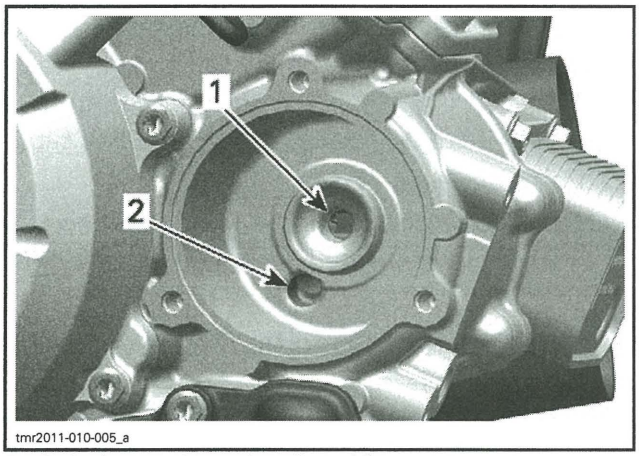

1. *Outlet bore to the engine oil providing system*
2. *Inlet bore from the oil pump to the oil filter*

Install a **NEW** O-ring on oil filter cover.

Install the filter into the cover.

Apply engine oil on O-ring and grease on the end of filter.

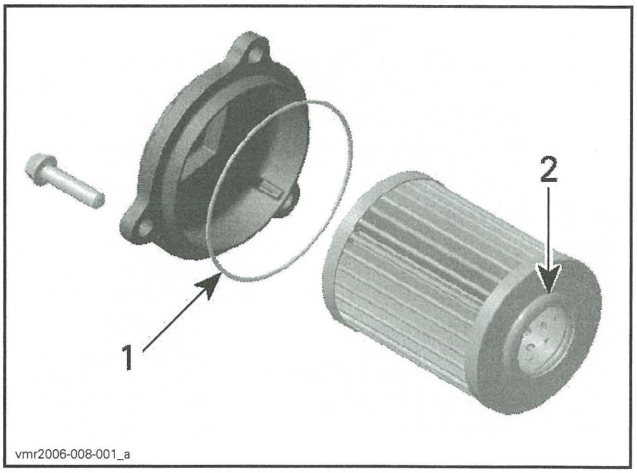

1. *Slightly oil*
2. *Slightly oil*

Install the cover on the engine.

Tighten oil filter cover screws to specification.

OIL FILTER COVER SCREWS	
Tightening torque	10 N•m ± 1 N•m (89 lbf•**in** ± 9 lbf•**in**)

ENGINE (COOLING SYSTEM)

Recommended Engine Coolant

COOLANT	
BRP RECOMMENDED PRODUCT	BRP PREMIXED COOLANT (P/N 219 700 362)
ALTERNATIVE, OR IF NOT AVAILABLE	Distilled water and antifreeze solution (50% demineralized water, 50% antifreeze)

NOTICE **Always use ethylene-glycol antifreeze containing corrosion inhibitors specifically formulated for internal combustion aluminum engines.**

Engine Coolant Level Verification

⚠ WARNING

Check coolant level with engine cold.

1. Place vehicle on a level surface.
2. Open service cover.
3. Remove the pressure cap.

⚠ WARNING

In order to avoid potential burns, do not remove the pressure cap if the engine is hot.

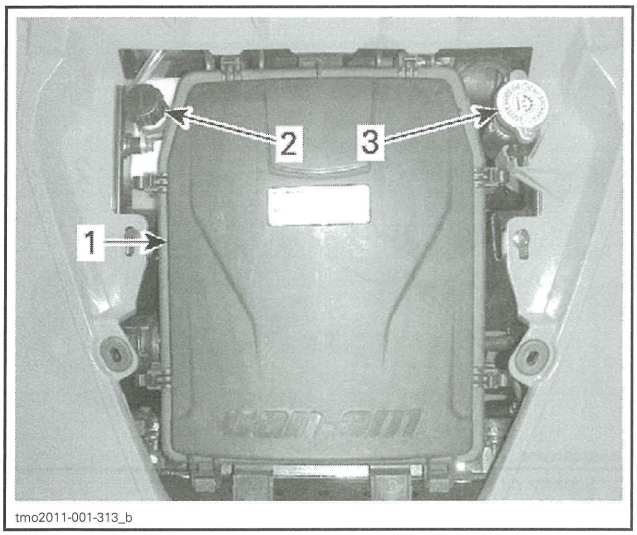

tmo2011-001-313_b

1. Air filter housing cover
2. Coolant expansion tank cap
3. Pressure cap

4. Ensure cooling system is full up to the pressure cap seat.

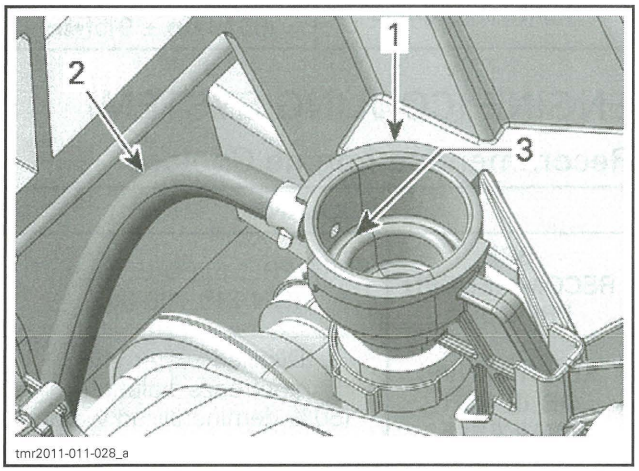

tmr2011-011-028_a

1. Cooling system refill adapter
2. Expansion tank hose
3. Coolant system full level (pressure cap seat)

5. Add coolant in system as necessary.
6. Properly reinstall pressure cap on refill adapter.
7. Check coolant level in expansion tank.

NOTE: Coolant level can be checked by looking at the side of the coolant expansion tank under the RH front fender.

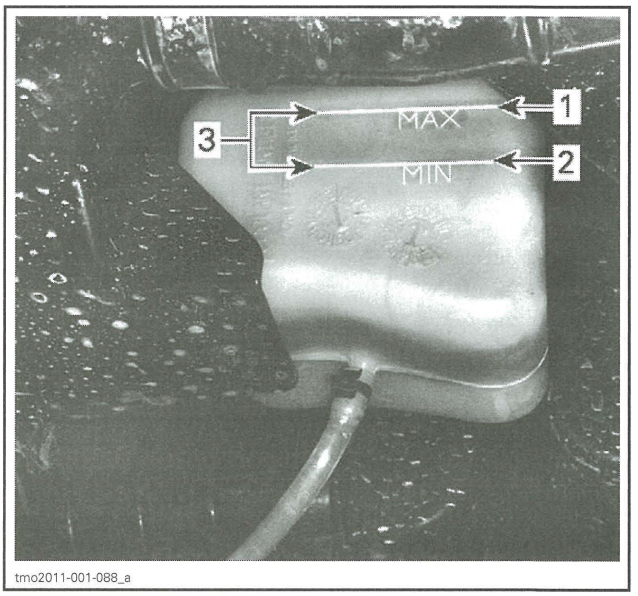

tmo2011-001-088_a

COOLANT EXPANSION TANK
1. MAX. level
2. MIN. level
3. Operating range

8. Add coolant if level is below MIN. mark. Use a funnel to avoid spillage. **Do not overfill.**
9. Properly reinstall coolant expansion tank cap.
10. Reinstall service cover.

NOTE: A cooling system that frequently requires addition of coolant is an indication of leaks or engine problems.

Engine Coolant Specific Gravity Check

Remove pressure cap.

Use an antifreeze tester to test coolant strength.

MINIMUM RECOMMENDED COOLANT STRENGTH
-30°C (-22°F)

Engine Coolant Replacement

Cooling System Draining

⚠ WARNING

In order to avoid potential burns, do not remove the pressure cap or loosen the coolant drain plug if the engine is hot.

1. Remove service cover.
2. Remove the cooling system pressure cap.

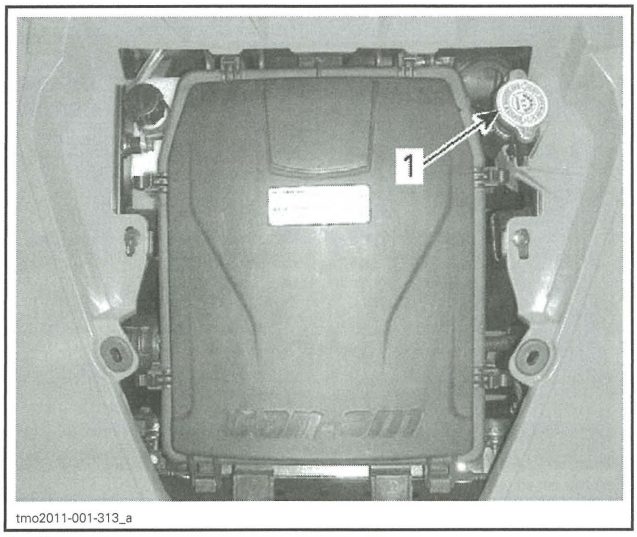

1. Pressure cap

3. Unscrew coolant drain plug and drain the coolant into a suitable container.

NOTE: The drain plug is accessible from underneath the vehicle.

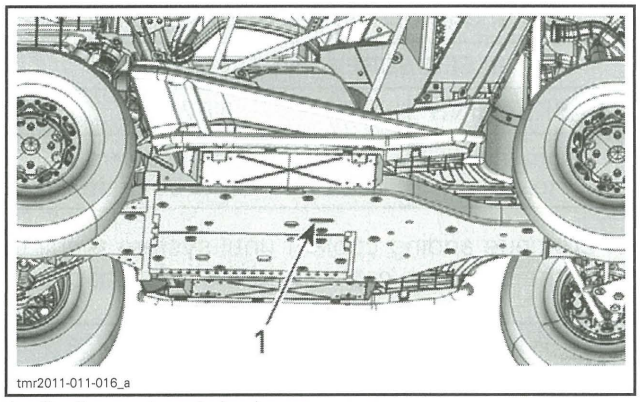

1. Cooling system drain plug access

NOTE: Do not unscrew the coolant drain plug completely.

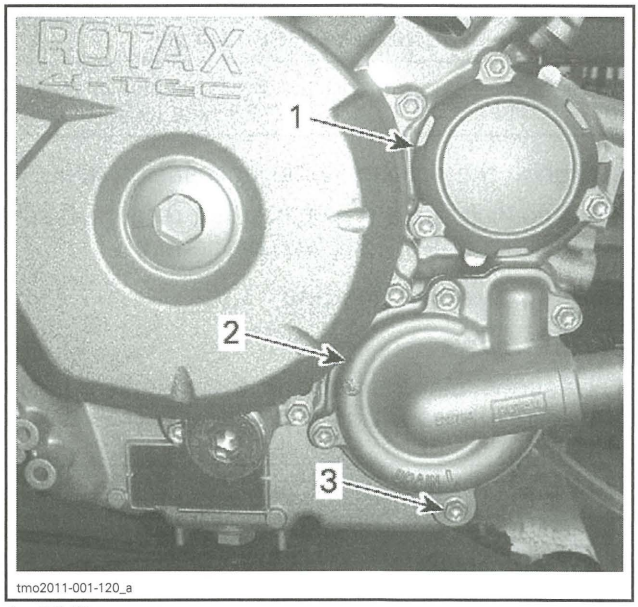

1. Oil filter cover
2. Water pump cover
3. Coolant drain plug

4. Disconnect the lower radiator hose and drain the remaining coolant into a suitable container.

NOTE: Take note of the position of the hose clamp on the lower radiator hose at the radiator.

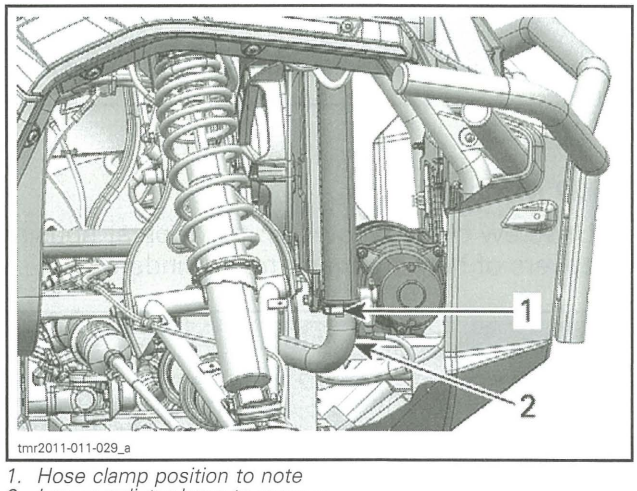

1. Hose clamp position to note
2. Lower radiator hose to remove

5. Drain cooling system completely.
6. Reinstall coolant drain plug.

COOLANT DRAIN PLUG	
Tightening torque	9 N•m to 11 N•m (80 lbf•**in** to 97 lbf•**in**)

7. Reinstall radiator hose as noted prior to removal.

RADIATOR HOSE CLAMP	
Tightening torque	2.5 N•m to 3.5 N•m (22 lbf•**in** to 31 lbf•**in**)

8. Siphon the cooling system expansion tank.
9. Fill cooling system with coolant, refer to *COOLING SYSTEM BLEEDING* procedure.

Cooling System Bleeding

800R Models

1. Unscrew bleed screw on thermostat housing cover of front cylinder.

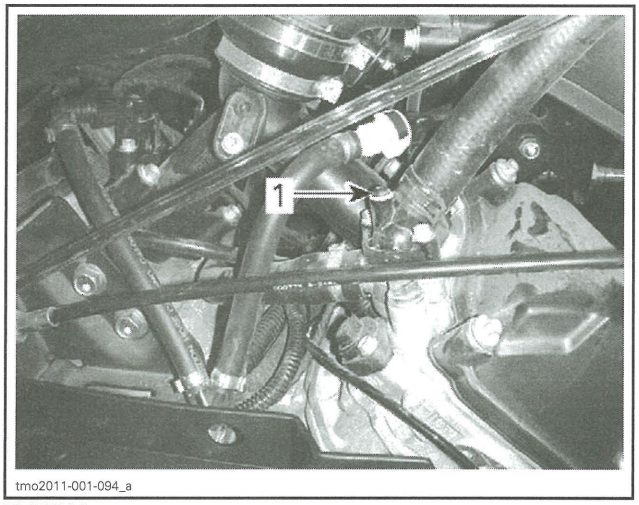

TYPICAL
1. Bleed screw

1000 Models

2. Unscrew bleed screws on thermostat housing covers of both front and rear cylinders.

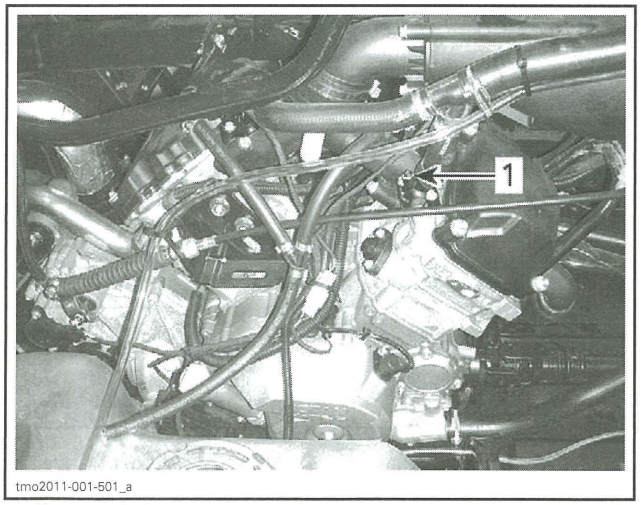

1. Front cylinder bleed screw

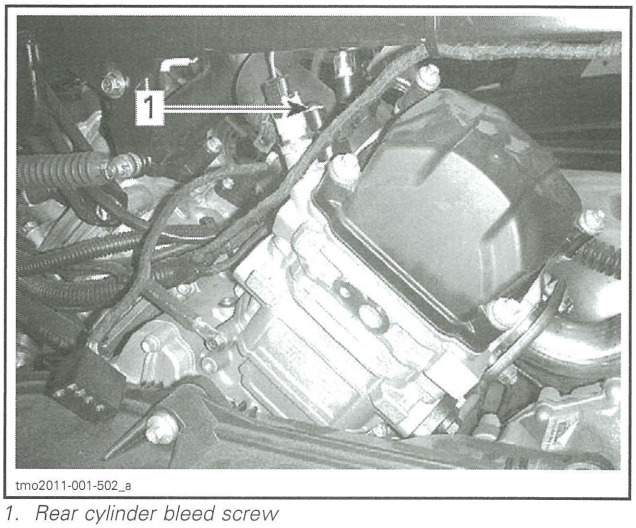

1. Rear cylinder bleed screw

All Models

3. Remove the pressure cap.
4. Fill the cooling system until coolant comes out of the bleed screw(s).
5. Install the bleed screw(s) using **NEW** gasket ring(s) and torque as per following chart.

BLEED SCREW INSTALLATION	
GASKET RING	NEW
Tightening torque	4.4 N•m to 5.6 N•m (39 lbf•**in** to 50 lbf•**in**)

6. Continue adding coolant until system is full up to the pressure cap seat in the refill adapter.

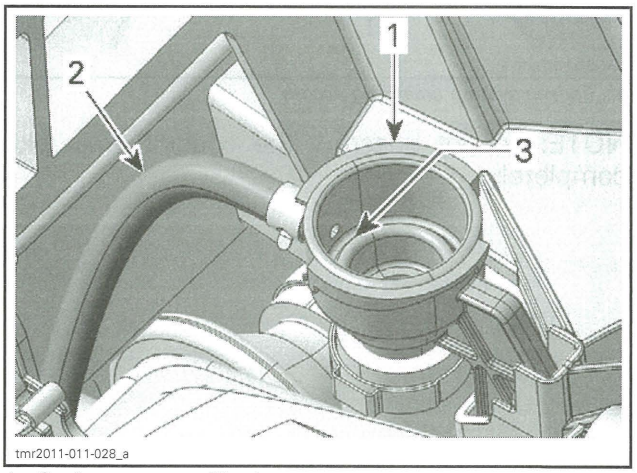

1. Cooling system refill adapter
2. Expansion tank hose
3. Coolant system full level (pressure cap seat)

7. Install pressure cap.

NOTICE The following steps must be carried out as specified to ensure proper cooling system bleeding in addition to the previous steps.

8. Lift the entire front end of the vehicle so the front tires are 60 cm (2 ft) above the ground for at least 1 minute.

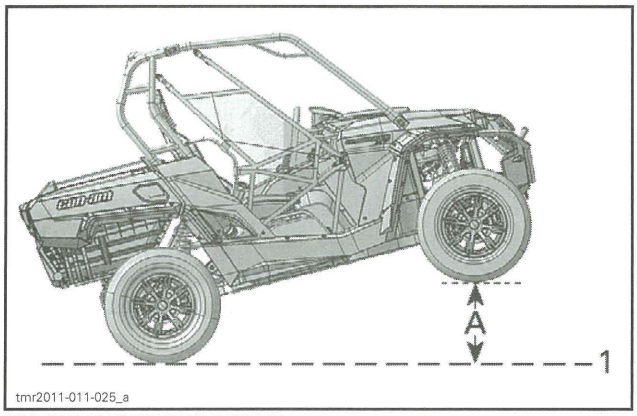

ENTIRE FRONT END LIFTED
1. Ground level
A. 60 cm (24 in)

9. Lower vehicle to the ground.
10. Remove pressure cap and add coolant as required.
11. Install pressure cap.
12. Lift driver's side of vehicle 60 cm (2 ft) above it's horizontal position for at least 1 minute.

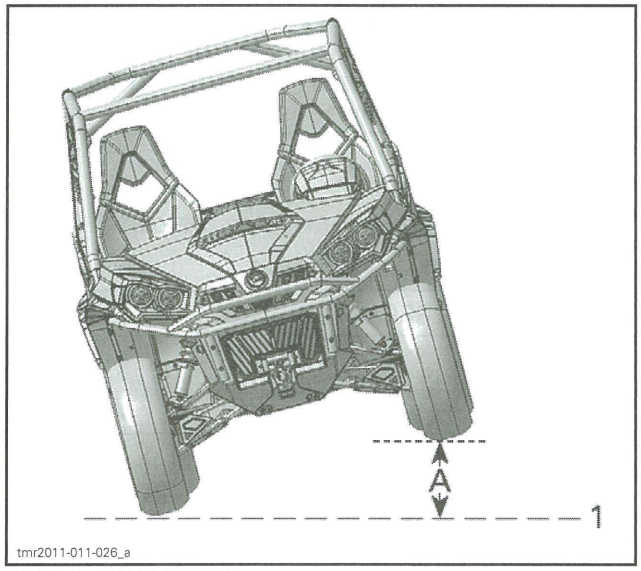

DRIVER'S SIDE LIFTED
1. Ground level
A. 60 cm (24 in)

13. Lower vehicle to the ground.
14. Remove pressure cap and add coolant as required up to the pressure cap seat in the refill adapter.

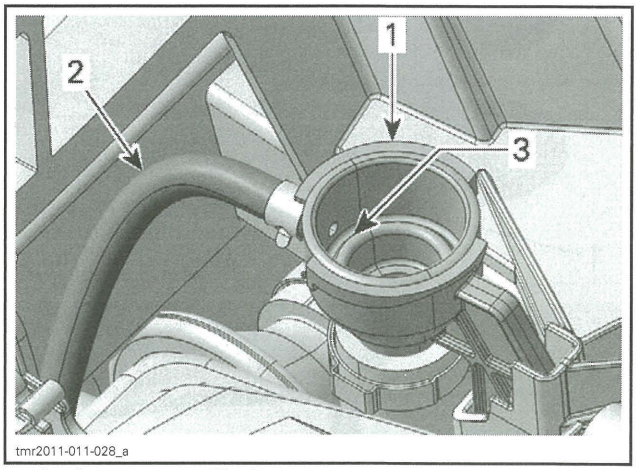

1. Cooling system refill adapter
2. Expansion tank hose
3. Coolant system full level (pressure cap seat)

15. Install the pressure cap.
16. Check coolant level in the coolant expansion tank and fill to the MIN. level (as required).
17. Run engine at idle with the pressure cap **ON** until the cooling fan cycles on for a second time.
18. Stop the engine and let it cool down.

⚠ WARNING

In order to avoid potential burns, do not remove the pressure cap if the engine is hot.

19. When the engine is cool, remove pressure cap and add coolant if required.
20. Install pressure cap.
21. Check coolant level in the expansion tank. Add coolant as required. Refer to *ENGINE COOLANT LEVEL VERIFICATION* in this subsection.

Cooling System Inspection

1. Check general condition of hoses and clamps for tightness.
2. Check the leak indicator hose for oil or coolant.

NOTE: Leaking coolant indicates a defective rotary seal. Leaking oil indicates a defective oil seal. If either seal is leaking, both seals must be replaced at the same time. Refer to *WATER PUMP SHAFT AND SEALS* in the *COOLING SYSTEM* subsection.

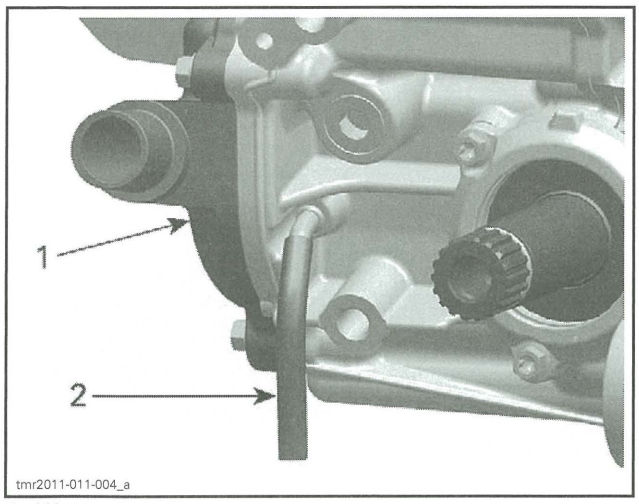

1. Water pump
2. Leak indicator hose

NOTE: Another leak indicator hole is visible on the PTO side. It provides an indication of the PTO gasket condition. If a liquid leaks from this hole, PTO gasket replacement is necessary.

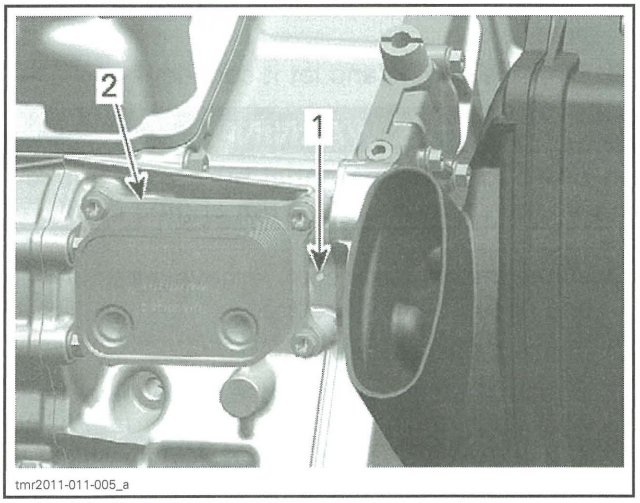

1. Leak indicator hole
2. Oil cooler

3. Ensure vents on coolant expansion tank neck are not obstructed (see following illustration).

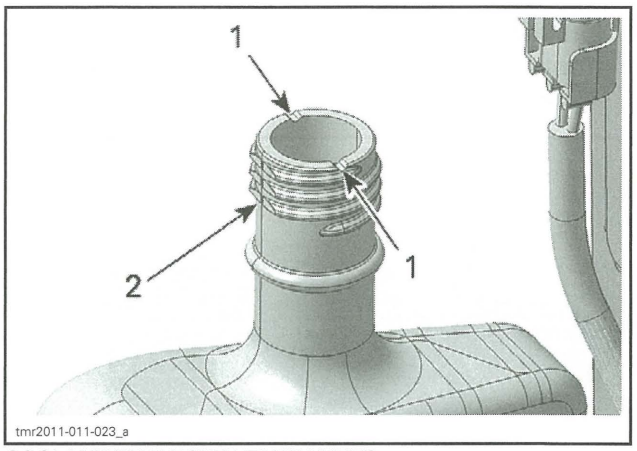

COOLANT EXPANSION TANK VENTS
1. Slots atop neck
2. Flat threadless portion on tank neck

4. Carry out an *ENGINE COOLANT SPECIFIC GRAVITY CHECK* as detailed in this subsection.
5. Carry out a *PRESSURE CAP TEST* as detailed in this subsection.
6. Replace engine coolant if contaminated.

NOTE: Engine coolant should be replaced every 2 years or if contaminated.

Cooling System Leak Test

⚠ WARNING

To avoid potential burns, do not remove the pressure cap or loosen the cooling system drain plug if the engine is hot.

1. Open service cover.
2. Remove cooling system pressure cap.
3. Install test cap on filler neck.

REQUIRED TOOL	
TEST CAP (P/N 529 035 991)	

4. Pressurize cooling system.

REQUIRED TOOL	
VACUUM/PRESSURE PUMP (P/N 529 021 800)	

COOLING SYSTEM LEAK TEST
103 kPa (15 PSI)

If there is no pressure drop after 10 minutes, there is no leak in the cooling system.

If the pressure drops, check all hoses, radiator, cylinders and engine base for coolant leaks or air bubbles.

Pressure Cap Test

Test the pressure cap using a cooling system tester.

Replace the cap if it does not hold the pressure, or if it opens at a relief pressure that is too low or too high.

PRESSURE CAP RELIEF PRESSURE
Approximately 110 kPa (16 PSI)

ENGINE (TOP END)

Engine Valve Clearance Adjustment

NOTE: Check and adjust valve clearance only when engine is cold.

Remove valve covers, refer to *TOP END* subsection.

Before checking or adjusting the valve clearance, turn crankshaft to TDC ignition of the respective cylinder, refer to *CAMSHAFT TIMING GEAR* in the *TIMING CHAIN* subsection.

Using feeler gauge, check the valve clearance.

VALVE CLEARANCE	
EXHAUST	0.11 mm to 0.19 mm (.0043 in to .0075 in)
INTAKE	0.06 mm to 0.14 mm (.0024 in to .0055 in)

If the valve clearance is out of specification, adjust valves as follows.

NOTE: Use mean value of exhaust/intake to ensure a proper valve adjustment.

Hold the adjustment screw at the proper position and torque the locking nut.

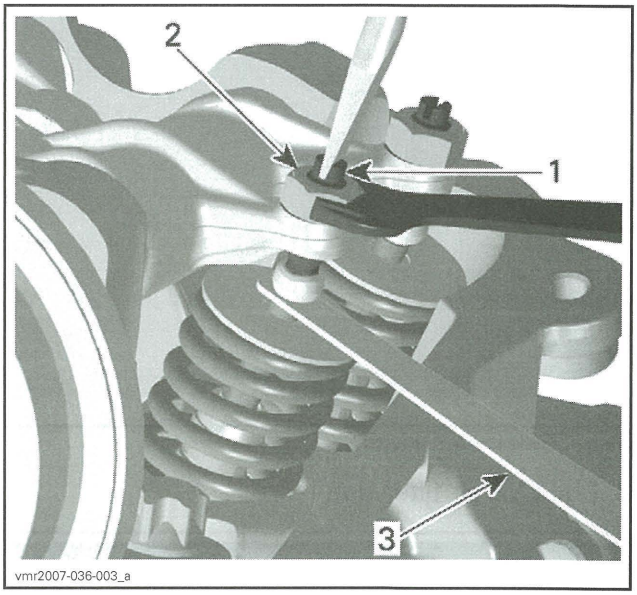

1. *Adjustment screw*
2. *Locking nut*
3. *Feeler gauge*

Repeat the procedure for each valve.

Before installing valve covers, recheck valve clearance.

CONTINUOUSLY VARIABLE TRANSMISSION (CVT)

CVT Air Filter Cleaning

CVT Air Filter Removal

1. Remove the CVT air filter plastic cover located on LH side of hood near driver.

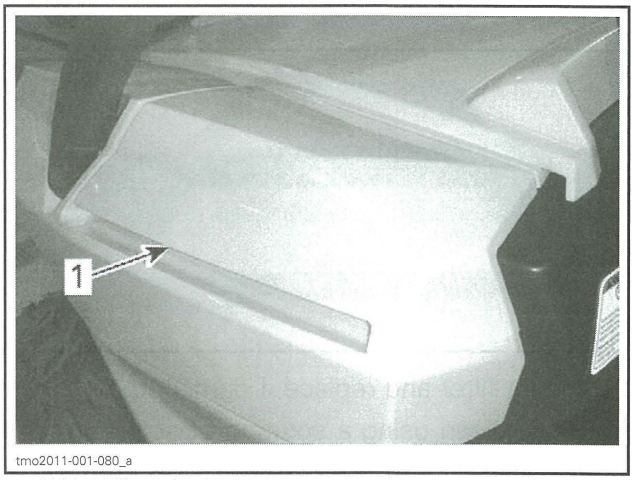

1. *CVT air filter plastic cover*

2. Slide the cover rearward.

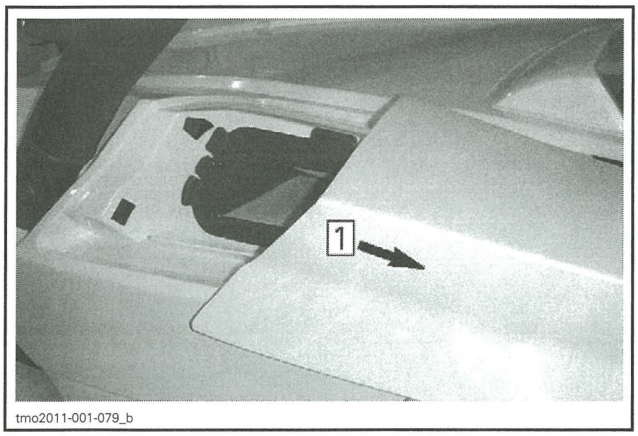

Step 1: Slide cover rearward

3. Pull CVT air filter out.

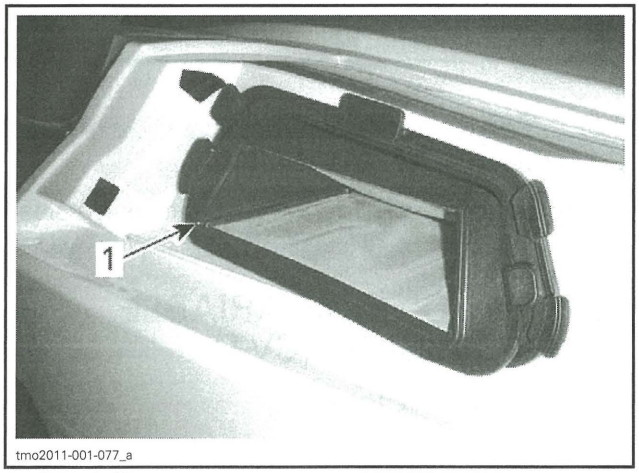

1. CVT air filter

CVT Air Filter Cleaning

1. Remove CVT air filter.

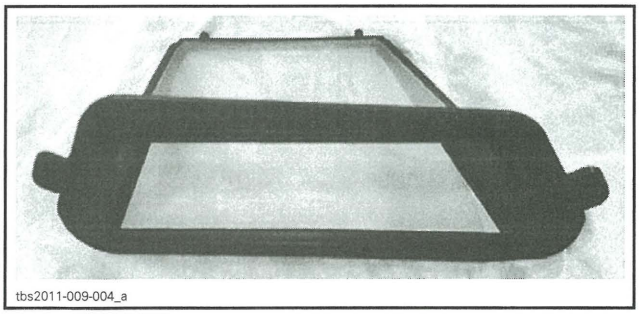

2. Inspect filter and replace if damaged.
3. Gently clean using a solution of soft soap and water, then rinse filter.
4. Dry filter completely.
5. Clean inside the CVT air inlet end.

CVT Air Filter Installation

1. Install air filter on CVT inlet using retaining tabs.
2. Install CVT air filter cover by sliding in place toward front of vehicle.

Drive Belt Inspection

Inspect belt for cracks, fraying or abnormal wear. Replace if necessary.

Check drive belt width at cord level. Replace if it is out of specification (see table below).

DRIVE BELT WIDTH	
SERVICE LIMIT	30 mm (1.181 in)

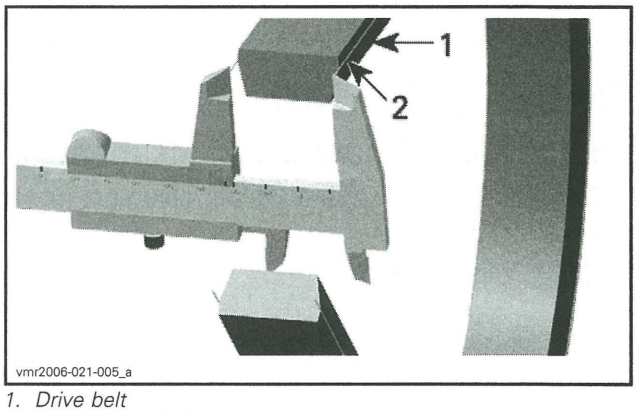

1. Drive belt
2. Cord in drive belt

Drive Pulley, Driven Pulley and One-way Bearing Maintenance

Refer to *CONTINUOUSLY VARIABLE TRANSMISSION (CVT)* subsection.

CVT Air Inlet/Outlet Cleaning

1. Remove CVT cover, refer to *CONTINUOUSLY VARIABLE TRANSMISSION (CVT)* subsection.
2. Inspect and clean the air inlet and outlet openings from inside the inner CVT cover.
3. Inspect and clean the aft end of air outlet duct at rear of the vehicle.

NOTE: If a lot of debris or grime are found in the CVT system, it may be necessary to remove the ducts and thoroughly clean them.

4. Reinstall CVT cover.

GEARBOX

Gearbox Oil Level Verification

Remove the RH lateral console panel and the fuel tank cover.

Check the gearbox oil level by removing the gearbox oil level plug.

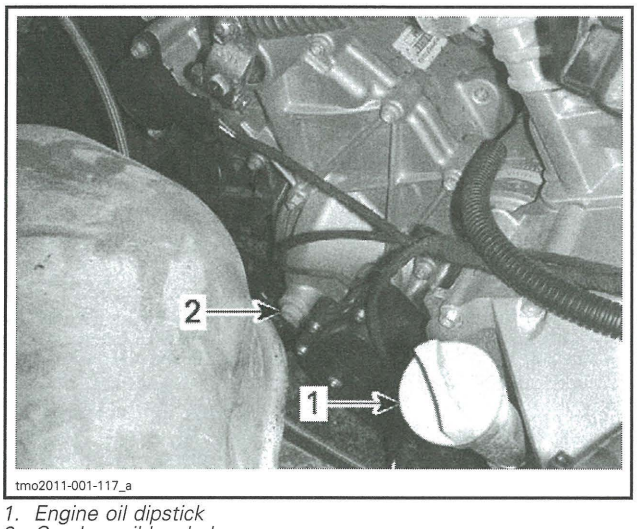

1. *Engine oil dipstick*
2. *Gearbox oil level plug*

The oil should be level with the bottom of the oil level hole.

NOTICE Operating the gearbox with an improper oil level may severely damage gearbox.

Gearbox Oil Replacement

Draining Procedure

Prior to change the oil, ensure vehicle is on a level surface.

Oil change should be done with a warm engine.

⚠ WARNING

The gearbox oil can be very hot.

Place a drain pan under the gearbox drain plug area.

Clean drain plug area and remove magnetic drain plug with its sealing ring to drain gearbox oil.

Discard sealing ring. Always install a NEW one.

Remove oil filler screw including its O-ring.

NOTICE Pay attention not to loose O-ring on oil filler screw.

Wait a while to allow oil flow out of gearbox.

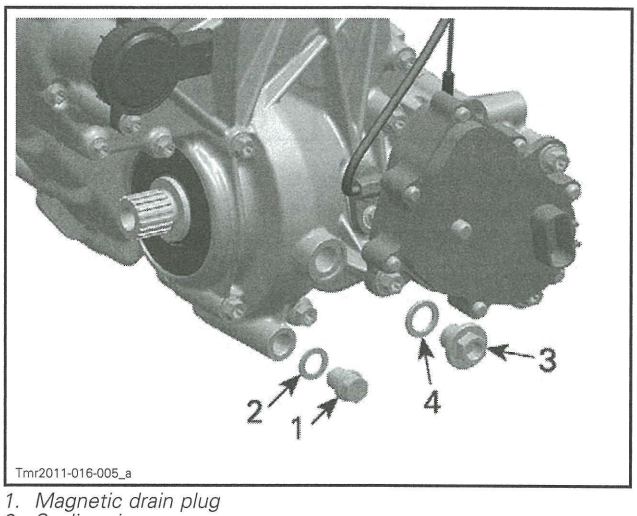

1. *Magnetic drain plug*
2. *Sealing ring*
3. *Oil filler screw*
4. *O-ring*

Dispose gearbox oil as per your local environmental regulations.

Inspection

Oil condition gives information about the teeth condition inside the gearbox. See *TROUBLESHOOTING* in this subsection.

Clean the magnetic drain plug from metal shavings and dirt. Presence of debris gives an indication of failure inside the gearbox. Check gearbox to correct the problem.

Replace O-ring of oil filler screw if brittle, hard or otherwise damaged.

Filling Procedure

Make sure that magnetic drain plug is reinstalled and tight.

Always install a NEW sealing ring.

MAGNETIC DRAIN PLUG	
Tightening torque	20 N•m ± 2 N•m (15 lbf•ft ± 1 lbf•ft)

With the vehicle on a level surface, fill the gearbox through the oil filler hole with XPS SYNTHETIC GEAR OIL (75W 140) (P/N 293 600 140) until the oil reaches the lower threads of the oil filler hole (around 450 ml (15.22 U.S. oz)).

However, if the XPS synthetic gear oil is not available use a gearbox oil that meets the requirements of 75W 140 API GL-5 synthetic gear oil.

Install the oil filler screw with its O-ring. Tighten oil filler screw to recommended torque.

OIL FILLER SCREW	
Tightening torque	5 N•m ± 0.6 N•m (44 lbf•**in** ± 5 lbf•**in**)

Vehicle Speed Sensor (VSS) Cleaning

Remove the VSS. Refer to *VSS REMOVAL* in *GEARBOX AND 4X4 COUPLING UNIT* subsection.

Remove all metal particles and oil from the VSS magnet.

NOTE: A dirty VSS will cause erratic speedometer readings.

FUEL SYSTEM

Throttle Body Inspection

1. Refer to *AIR INTAKE SYSTEM* subsection and remove the following:
   - Air filter housing
   - Adapter hose between air filter housing and throttle body.
2. Visually inspect throttle plate and throttle body venturi for cleanliness.
3. Clean inside throttle body using a common throttle body cleaner if necessary.

Fuel Tank Vent Breather Filter Replacement

Ensure breather filter is installed with the flow arrow pointing towards the vent hose.

Secure the vent hose using a locking tie as illustrated.

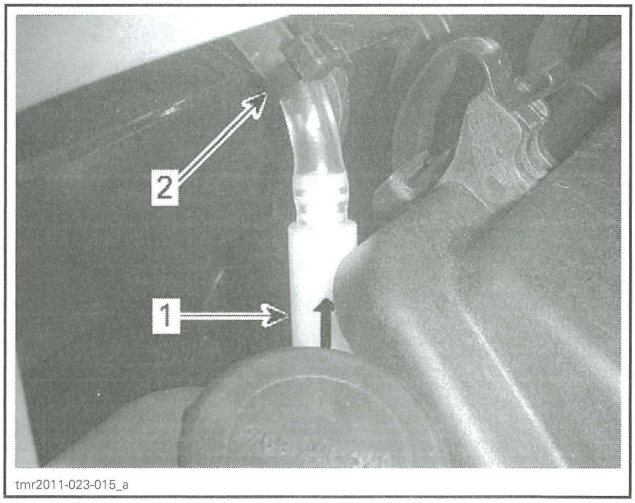

FUEL TANK VENT BREATHER FILTER
1. *Direction arrow on breather filter pointing towards vent hose*
2. *Vent hose secured with a locking tie*

Fuel System Inspection

1. Visually inspect fuel tank for cracks, wear marks, signs of leakage or any other damages.
2. Visually inspect fuel system hoses for proper rooting, cracking, wear marks, signs of leakage or any other damages.
3. Carry out a *FUEL TANK LEAK TEST*, refer to *FUEL TANK AND FUEL PUMP* subsection.

⚠ WARNING

All fuel system leaks must be repaired. Damaged, worn or leaking fuel system components should be replaced to ensure fuel system tightness.

Fuel Pump Pressure Test

Refer to *FUEL TANK AND FUEL PUMP* subsection for procedure.

Fuel Pump Prefilter Cleaning

1. Remove fuel pump from fuel tank, refer to *FUEL PUMP REMOVAL* in *FUEL TANK AND FUEL PUMP* subsection.
2. Clean the fuel pump prefilter (strainer) using XPS BRAKES AND PARTS CLEANER (P/N 219 701 705) and low pressure air.
3. If the fuel pump prefilter is heavily soiled, clogged or damaged:
   - Replace it with a new one. Refer to *FUEL PUMP STRAINER REPLACEMENT* in the *FUEL TANK AND FUEL PUMP* subsection.
   - Inspect inside of fuel tank for contaminants.

- Clean fuel tank as required.
- Inspect fuel tank vent breather filter. Replace as necessary. Refer to *FUEL TANK VENT BREATHER FILTER* in *FUEL TANK AND FUEL PUMP* subsection.

ELECTRICAL SYSTEM

Battery Inspection

Visually inspect battery casing for cracks or other damage. If casing is damaged, replace battery and thoroughly clean battery rack with water and baking soda.

Inspect battery posts condition, battery rack mounting, straps and strap attachment points.

For battery testing, refer to *CHARGING SYSTEM* subsection.

Spark Plug Replacement

Spark Plug Removal

Unplug the spark plug cable.

Clean the spark plug area with pressurized air.

Unscrew spark plug.

Spark Plug Installation

Prior to installation make sure that contact surfaces of the cylinder head and spark plug are free of grime.

1. Using a wire feeler gauge, set electrode gap as specified in *TECHNICAL SPECIFICATIONS*.
2. Apply antiseize lubricant over the spark plug threads to prevent possible seizure.
3. Hand screw spark plug into cylinder head, then tighten with a torque wrench and an appropriate socket.

SPARK PLUG	
Service product	LOCTITE 767 (ANTISEIZE LUBRICANT) (P/N 293 800 070)
Tightening torque	20 N•m ± 2 N•m (15 lbf•ft ± 1 lbf•ft)

DRIVE SYSTEM

Front Differential Oil Level Verification

Clean filler plug prior to checking oil level.

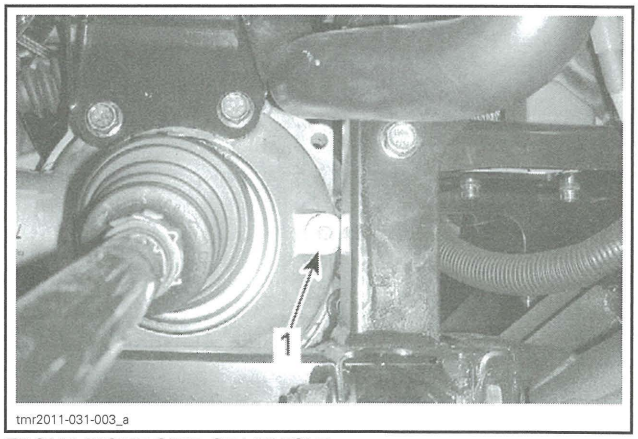

FRONT RIGHT SIDE OF VEHICLE
1. Filler plug

With vehicle on a level surface, check oil level by removing filler plug. Oil level must reach the lower edge.

Reinstall filler plug with a NEW sealing ring.

FILLER PLUG	
Tightening torque	22.5 N•m ± 2.5 N•m (17 lbf•ft ± 2 lbf•ft)

Front Differential Oil Replacement

Place vehicle on a level surface. Set transmission in park position.

From underneath of vehicle, clean drain plug area.

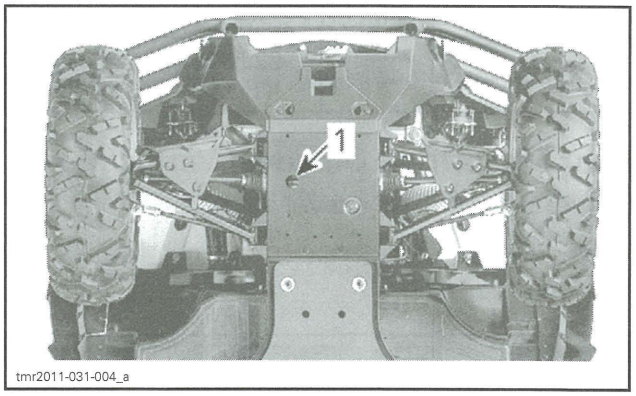

1. Drain plug access hole

Place a drain pan under the front differential.

Remove drain plug.

Unscrew filler plug.

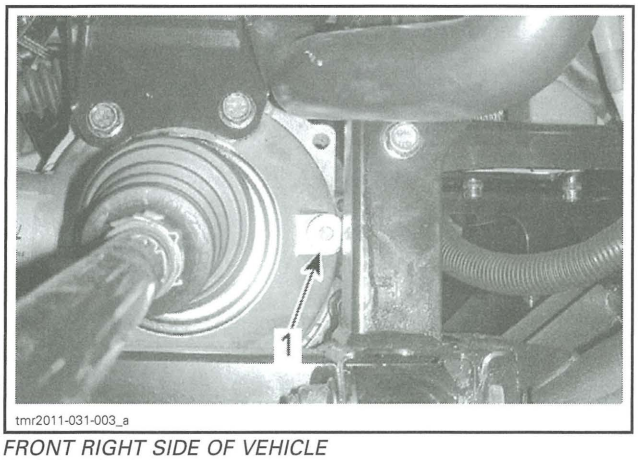

FRONT RIGHT SIDE OF VEHICLE
1. Filler plug

Install drain plug.

DRAIN PLUG	
Tightening torque	7.5 N•m ± 0.5 N•m (66 lbf•**in** ± 4 lbf•**in**)

Refill front differential with recommended oil.

RECOMMENDED OIL	CAPACITY
XPS SYNTHETIC GEAR OIL (75W 90) (P/N 293 600 043) or a 75W 90 (API GL-5) gear oil	500 ml (17 U.S. oz)

Reinstall filler plug with a NEW sealing ring.

FILLER PLUG	
Tightening torque	22.5 N•m ± 2.5 N•m (17 lbf•ft ± 2 lbf•ft)

Rear Final Drive Oil Level Verification

Ensure vehicle is on a level surface.

Clean filler plug area.

Remove filler plug.

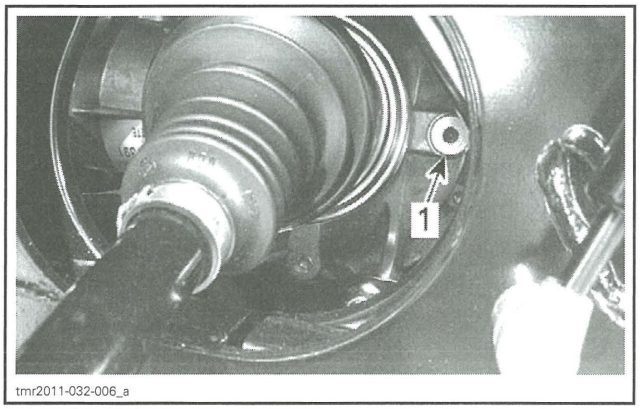

LH REAR SIDE OF VEHICLE
1. Filler plug

It is possible to verify the oil level by inserting a wire with a 90° bend through the oil filler hole.

Oil level is within the following distance from the bottom of oil filler plug threads when the vehicle is level on ground.

OIL LEVEL
20 mm ± 5 mm (9/16 in ± 3/16 in)

Reinstall filler plug with a NEW sealing ring.

FILLER PLUG	
Tightening torque	22.5 N•m ± 2.5 N•m (17 lbf•ft ± 2 lbf•ft)

Rear Final Drive Oil Replacement

Ensure vehicle is on a level surface.

Remove the rear skid plate.

Clean filler and drain plug areas.

Place a drain pan under rear final drive.

Unscrew filler plug.

Remove drain plug.

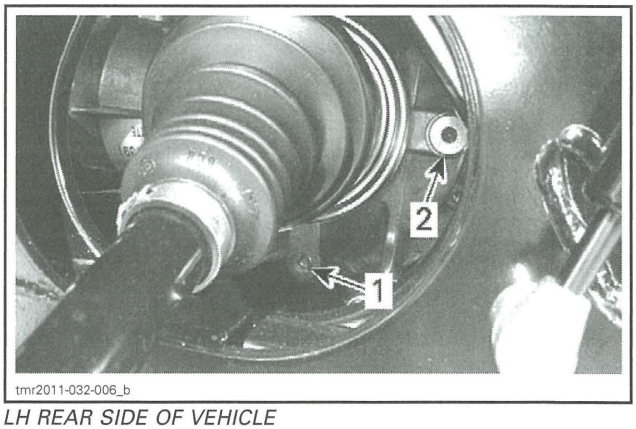

LH REAR SIDE OF VEHICLE
1. Drain plug
2. Filler plug

Install drain plug.

DRAIN PLUG	
Tightening torque	7.5 N•m ± 0.5 N•m (66 lbf•**in** ± 4 lbf•**in**)

Refill the rear final drive.

RECOMMENDED OIL	QUANTITY
XPS SYNTHETIC GEAR OIL (75W 140) (P/N 293 600 140) or a 75W 140 (API GL-5) gear oil	350 ml (12 U.S. oz)

Reinstall filler plug with a NEW sealing ring.

FILLER PLUG	
Tightening torque	22.5 N•m ± 2.5 N•m (17 lbf•ft ± 2 lbf•ft)

Drive Shaft Boot and Protector Inspection

Visually inspect each drive shaft boot for grease leak, cracks or opening.

Check if the drive shaft boot protector are fixed firmly, not torn or otherwise damaged.

Replace if necessary.

Drive Shaft Joint Inspection

Turn and move drive shaft to detect excessive play.

Propeller Shaft U-Joint Condition

Check yoke U-joints for wear, backlash or axial play, replace if necessary.

Propeller Shaft U-Joint Lubrication

PROPELLER SHAFT U-JOINT LUBRICATION
Use Hi-temp bearing grease NLGI-2 or an equivalent

CHASSIS (WHEELS AND TIRES)

Wheel Lug Nut Torque Verification

Tighten wheel lug nuts to the specified torque using the illustrated sequence.

WHEEL LUG NUTS	
Tightening torque	100 N•m ± 10 N•m (74 lbf•ft ± 7 lbf•ft)

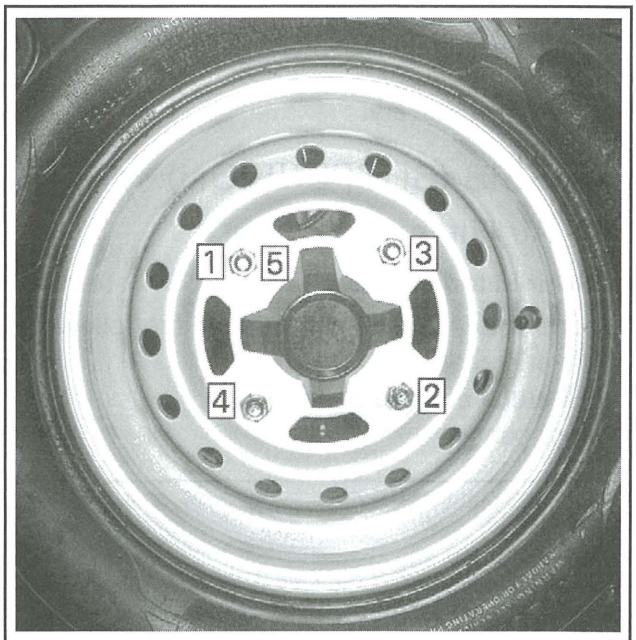

tmo2011-001-081_a

TIGHTENING SEQUENCE

CHASSIS (STEERING SYSTEM)

Wheel Bearing Inspection

1. Safely lift and support the front of vehicle. Refer to *INTRODUCTION* subsection.
2. Hold wheel by the top and the bottom and move it. Check for any play.
3. If there is any loose, replace wheel bearing, refer to *STEERING SYSTEM* subsection.

NOTE: To properly locate play during this inspection, be sure to check other components for wear or loose (ball joints, suspension pivots, etc). If necessary repair or replace all defective parts before checking the wheel bearing condition. Be careful not to misjudge loose in the ball joint and loose in the wheel bearing.

Steering System Inspection

Steering Column

Turn and move steering column to detect any play.

Rack and Pinion

Check rack and pinion boots for:
- Damage
- Cracks.

Replace if necessary.

Tie-Rod End

Check tie-rod end ball joint for:
- Damage

- Pitting
- Play.

Replace if necessary.

CHASSIS (SUSPENSION)

ACS Air Filter

ACS Air Filter Access

To access to ACS air filter, remove the following:
- Driver's seat
- LH lateral console panel
- Floor panel.

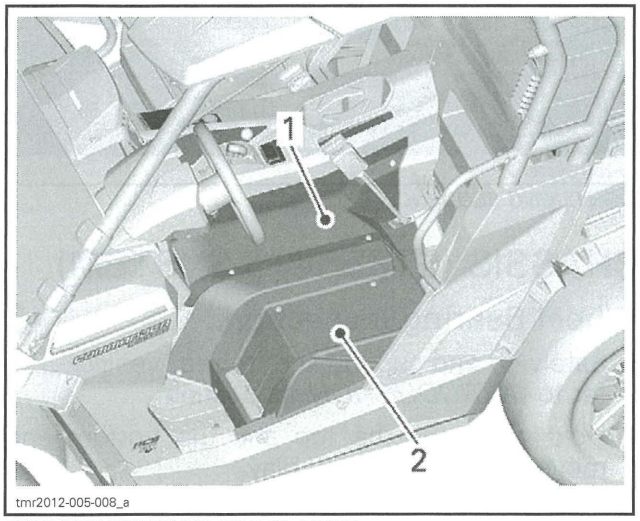

SIDE NET REMOVED FOR CLARITY
1. *LH lateral console panel*
2. *Floor panel*

The ACS compressor is located in front of air reservoirs.

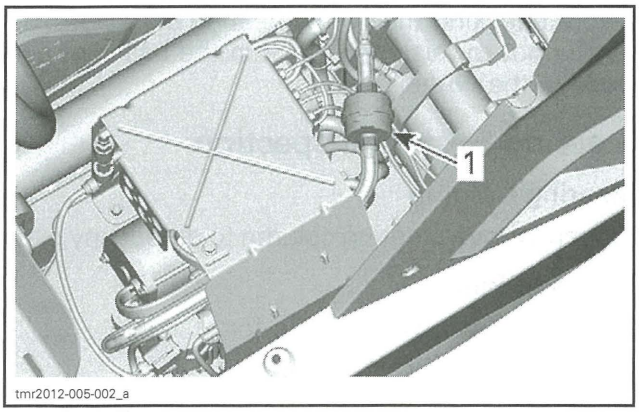

1. *ACS air filter*

ACS Air Filter Replacement

1. Remove and discard clamps securing hoses to air filter.

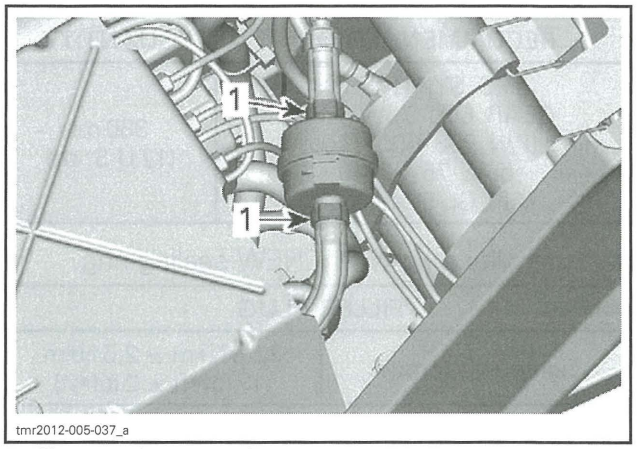

1. *Clamps to be removed*

2. Remove the air filter.
3. Install the new air filter with its attachment towards the compressor.
4. Secure air filter using **NEW** clamps.

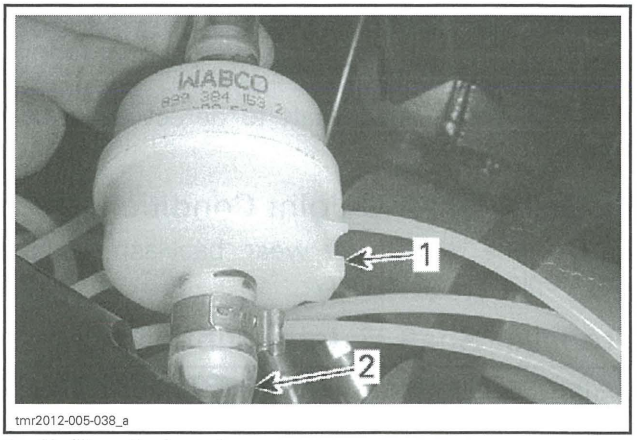

1. *Air filter attachment*
2. *Air hose from compressor*

ACS Hoses and Fittings

ACS Hoses and Fittings Inspection

Check shock hoses for damage.

Check shock fittings for damage.

Check hoses and fittings for air leaks.

Shock Absorber Inspection

Check shock absorber for any leaks, replace if necessary.

Shock Absorber Spherical Bearing Lubrication

HPG Shock Absorber with Remote Reservoir

1. Remove shock absorber from vehicle.
2. Remove shock sleeves then O-rings from shock absorber.

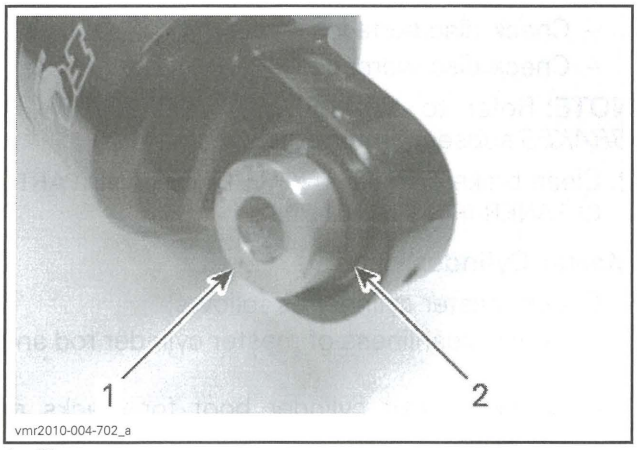

1. Sleeve
2. O-ring

3. Clean spherical bearing using a shop rag to remove any dirt and debrris.
4. Lubricate spherical bearing as illustrated.

SPHERICAL BEARING LUBRICATION
SUSPENSION GREASE (P/N 293 550 033)

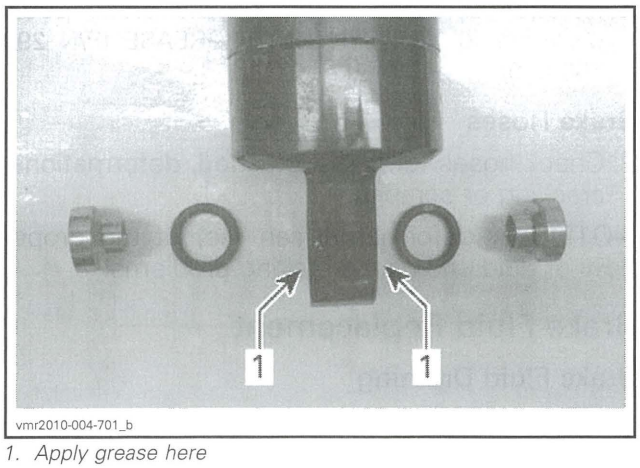

1. Apply grease here

5. Install O-rings then shock sleeves.
6. Install shock absorber.

Front Suspension Arm Lubrication

Lubricate suspension arm at grease fittings.

SUSPENSION ARM LUBRICATION
SUSPENSION GREASE (P/N 293 550 033)

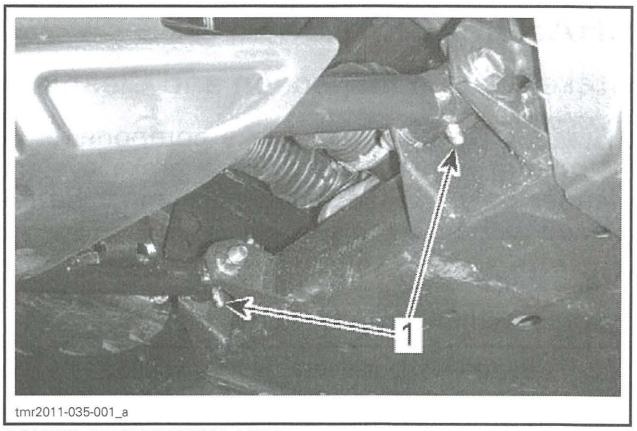

LOWER SUSPENSION ARM
1. Grease fittings

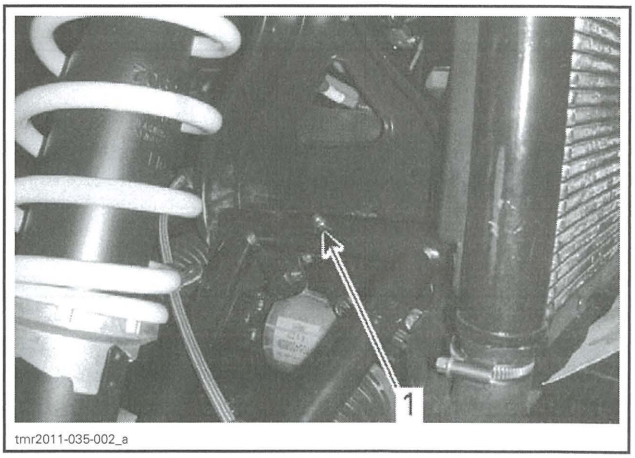

UPPER SUSPENSION ARM
1. Grease fitting

Front Suspension Arm Inspection

Check suspension arm for:
- Cracks
- Pitting
- Bending
- Distortion.

Check suspension arm for abnormal play:
- Side to side
- Up and down.

If any play is detected, inspect:
- Bushings
- Cushions
- Wear plates.

Check ball joint for:
- Damage
- Pitting
- Play.

Check ball joint bellows for:
- Damage
- Cracks.

CHASSIS (BRAKES)

Brake System Inspection and Cleaning

NOTICE **Do not clean brake components in petroleum based solvent. Use brake system cleaner only. Soiled brake pads must be replaced with new ones.**

Brake Pads

1. Measure brake pad lining thickness.

BRAKE PAD MINIMUM THICKNESS
1 mm (1/32 in)

NOTE: The brake pad grooves are wear indicators.

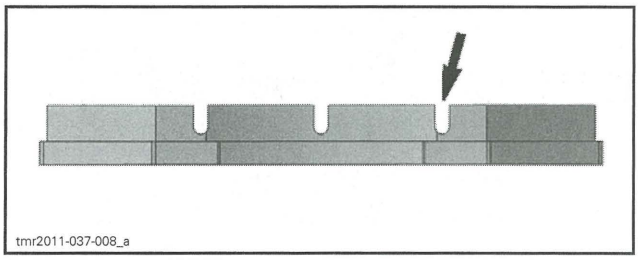

BRAKE PAD GROOVE

⚠ WARNING

Brake pads must always be replaced in pairs.

Brake Caliper

1. Remove calipers then check the following components:
   - Check brake pad pins
   - Check caliper boot for cracks
   - Check caliper movement on its support
   - Check pistons movement
   - Check pistons for scratches, rust or other damages.
2. Clean the following components using XPS BRAKES AND PARTS CLEANER (P/N 219 701 705):
   - Brake pads
   - Caliper support and slider
   - Caliper pistons, spring and pins.

NOTE: Do not remove pistons from caliper for cleaning them.

3. Lubricate caliper sliders and pins using an appropriate *BRAKE CALIPER SYNTHETIC GREASE*.

Brake Disc

1. Check brake disc as follows:
   - Check disc thickness
   - Check disc surfaces
   - Check disc warpage.

NOTE: Refer to *BRAKE DISC INSPECTION* in *BRAKES* subsection for details.

2. Clean brake disc using XPS BRAKES AND PARTS CLEANER (P/N 219 701 705).

Master Cylinder

1. Check master cylinder as follows:
   - Check cleanliness of master cylinder rod and boot.
   - Check master cylinder boot for cracks or damage.
2. If required, clean then lubricate master cylinder rod and boot using COSMO RUBBER GREASE (P/N 293 550 055).

Brake Pedal

1. Check brake pedal as follows:
   - Brake pedal pivot movement
   - Brake pedal pivot cleanliness.
2. If required, clean then lubricate brake pedal pivot using XPS SYNTHETIC GREASE (P/N 293 550 010).

Brake Hoses

1. Check hoses for leaks, crushed, deformations, cracking or scrapes.

NOTE: Any deformation can restrict the proper flow of fluid and cause braking problems.

Brake Fluid Replacement

Brake Fluid Draining

1. Clean and remove reservoir cover with its diaphragm.
2. Connect a clear hose into caliper bleeder.

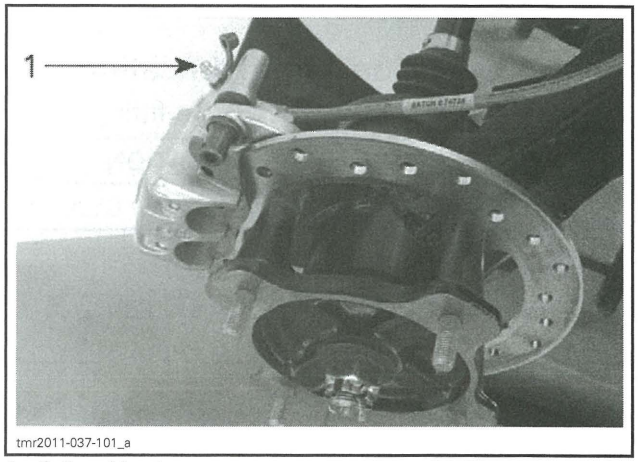

1. Caliper bleeder

3. Loosen caliper bleeder.
4. Pump brake pedal until no more fluid flows out.
5. Repeat draining procedure for the other caliper bleeders.

Brake Fluid Filling

1. Add recommended brake fluid to MAX. mark. Do not overfill.

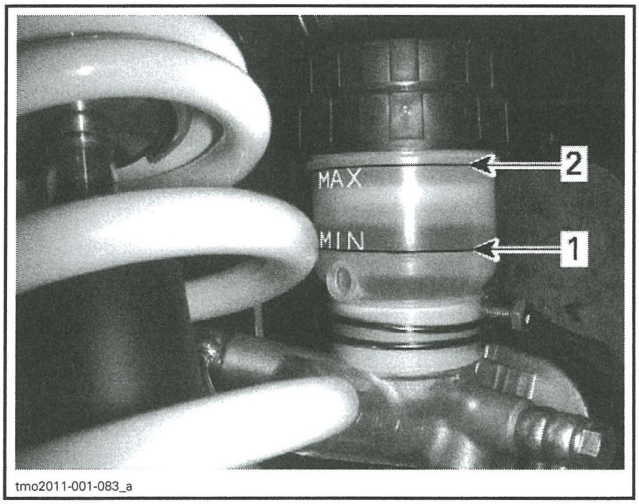

TYPICAL
1. MIN.
2. MAX.

RECOMMENDED BRAKE FLUID
DOT 4 BRAKE FLUID (P/N 293 600 131)

⚠ WARNING

- **Use only DOT 4 brake fluid from a sealed container.**
- **Do not use brake fluid from an old or already opened container.**

Brake Fluid Bleeding (Procedure Using a Vacuum Pump)

NOTE: Brake fluid reservoir must be kept full to prevent air from being pumped into the system.

1. On each caliper, unscrew bleeder until brake fluid comes out then close it.
2. Install the vacuum pump onto caliper bleeder.

REQUIRED TOOL	
VACUUM/PRESSURE PUMP (P/N 529 021 800)	

3. Place pump to vacuum position.
4. Pump vacuum pump a few times.
5. Loosen bleeder.
6. Continue to pump until no more air bubbles appear in clear hose.
7. Close then tighten bleeder.

BLEEDER	
Tightening torque	5.5 N•m ± 1.5 N•m (49 lbf•**in** ± 13 lbf•**in**)

8. Add recommended brake fluid to MAX. mark. Do not overfill.
9. Perform bleeding procedure for the other caliper bleeders.
10. Check brake pedal operation:
    - If brake pedal feels spongy, bleed system again then carry out the *BRAKE SYSTEM PRESSURE VALIDATION* as detailed in *BRAKES* subsection.

Brake Fluid Bleeding (Manual Bleeding Procedure)

NOTE: Brake fluid reservoir must be kept full to prevent air from being pumped into the system.

1. Connect a clear hose onto caliper bleeder.
2. Pump up system pressure with brake pedal until pedal resistance is felt.
3. Depress and hold brake pedal.
4. Open bleeder and then close it.
5. Release brake pedal slowly.

NOTE: Do not release brake pedal until bleeder has been closed.

6. Repeat procedure until fluid flows out without any air bubbles.
7. Tighten bleeder.

BLEEDER	
Tightening torque	5.5 N•m ± 1.5 N•m (49 lbf•**in** ± 13 lbf•**in**)

8. Perform bleeding procedure for the other caliper bleeders.
9. Check brake pedal operation:
    - If brake pedal feels spongy, bleed system again then carry out the *BRAKE SYSTEM PRESSURE VALIDATION* as detailed in *BRAKES* subsection.

CHASSIS (PASSENGER HANDHOLDS)

Passenger Handhold Condition

Check if the passenger handholds are fixed firmly, not bent or otherwise damaged.

Replace if necessary.

CHASSIS (TOW HITCH)

Tow Hitch Inspection

Ensure tow hitch receptacle module is solidly mounted.

Inspect hitch for cracks and other damages.

Repair or replace as necessary.

STORAGE PROCEDURE

SERVICE PRODUCTS

Description	Part Number	Page
BRP HEAVY DUTY CLEANER	293 110 001	34
XPS FUEL STABILIZER	413 408 601	33
XPS LUBE	293 600 016	34
XPS MULTI-PURPOSE CLEANER	219 701 709	34
XPS STORAGE OIL (EXCEPT U.S. COUNTRY)	413 711 600	33
XPS STORAGE OIL (U.S. COUNTRY ONLY)	413 711 900	33

GENERAL

If the SSV is not used or is to be stored for an extended period of time, more than 4 months, be sure to perform the storage procedures described below.

Where applicable, refer to the appropriate subsections in this manual for the required tasks outlined in these procedures.

PROCEDURES

NOTE: To facilitate the inspection and ensure adequate lubrication of components, it is recommended to clean the entire vehicle. Refer to *VEHICLE CLEANING* in this subsection.

FUEL SYSTEM

Fuel System Protection

With the new fuel additives, it is critical to use the XPS FUEL STABILIZER (P/N 413 408 601) or an equivalent to prevent fuel deterioration and fuel system gumming. Follow the manufacturer's instructions for proper use.

NOTICE **Fuel stabilizer should be added prior to engine lubrication to ensure fuel system components protection against varnish deposits.**

Pour fuel stabilizer in fuel tank. Fill up fuel tank.

ENGINE

Engine Internal Lubrication

Engine internal parts must be lubricated to protect them from rust formation during the storage period.

Proceed as follows:

1. Remove lateral console panels.
2. Remove spark plugs.
3. Spray storage oil into each cylinder.

NOTE: Use the storage oil as per country availability.

STORAGE OIL
XPS STORAGE OIL (EXCEPT U.S. COUNTRY) (P/N 413 711 600)
XPS STORAGE OIL (U.S. COUNTRY ONLY) (P/N 413 711 900)

4. Press start button, 1 or 2 seconds maximum, to lubricate cylinders.
5. Reinstall the spark plugs.

NOTE: Do not run engine during storage period.

6. Block muffler outlet with a rag.

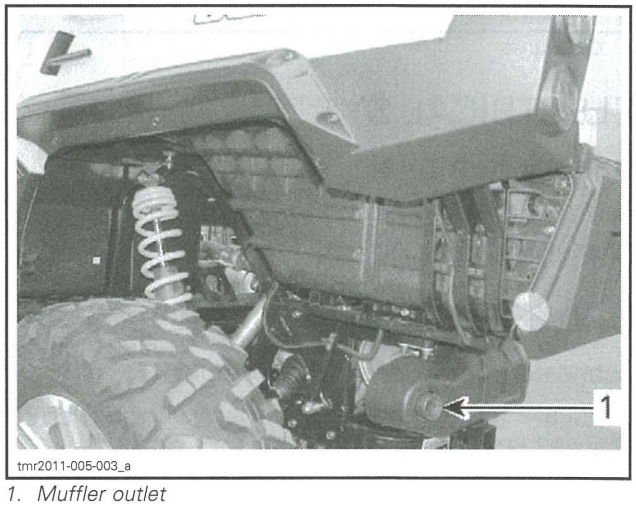

1. Muffler outlet

CVT Protection

Remove drive belt. Refer to *ENGINE, CVT AND GEARBOX*.

Close CVT cover.

Block CVT outlet with a rag.

NOTE: To reach the CVT outlet, tilt the cargo box.

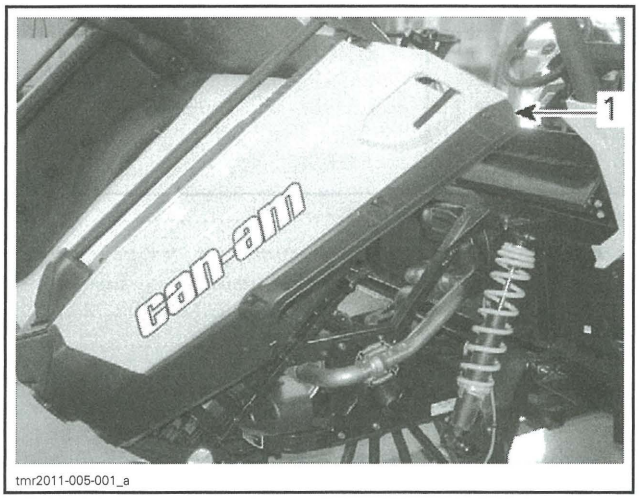

1. Tilted cargo box

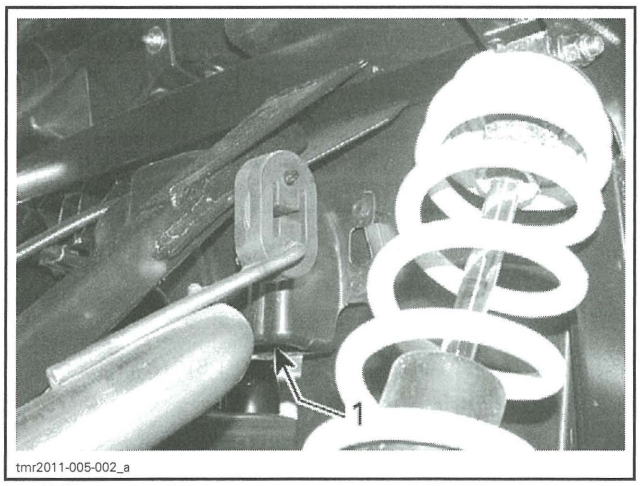

1. CVT outlet

ELECTRICAL SYSTEM

Battery Removal

Remove the battery.

Charge and store battery.

DRIVE SYSTEM

Lubricate front and rear propeller joints.

Lubricate the engine output shaft with XPS LUBE (P/N 293 600 016).

CHASSIS

Lubrication

Lubricate front suspension (no lube on rear).

Tire Pressure

Inflate tires to the recommended pressure.

Vehicle Cleaning

Wash and dry the vehicle.

NOTICE **Never use a high pressure washer to clean the vehicle. USE LOW PRESSURE ONLY (like a garden hose). The high pressure can cause electrical or mechanical damages.**

Remove any dirt or rust.

To clean the vinyl or plastic parts, use only flannel clothes with XPS MULTI-PURPOSE CLEANER (P/N 219 701 709).

NOTICE **It is necessary to use flannel cloths on plastic parts to avoid damaging surfaces. Never clean plastic parts with strong detergent, degreasing agent, paint thinner, acetone, products containing chlorine, etc.**

To clean the entire vehicle, including metallic parts use BRP HEAVY DUTY CLEANER (P/N 293 110 001).

Inspect the vehicle and repair any damage. Touch up all metal spots where paint has been scratched off. Spray all metal parts with XPS LUBE (P/N 293 600 016).

Vehicle Protection

Protect the vehicle with a cover to prevent dust accumulation during storage.

NOTICE **The vehicle has to be stored in a cool and dry place and covered with an opaque tarpaulin. This will prevent sun rays and grime from affecting plastic components and vehicle finish.**

PRESEASON PREPARATION

Prior to using vehicle, proper vehicle preparation is required after a storage period.

If any worn, broken or damaged parts are found, replace them.

Remove rags that were installed for storage: CVT outlet hose and muffler.

Disconnect air inlet hose from the air filter housing and inspect for animal nests etc. Reinstall hose.

Drain fuel tank and fill with fresh fuel if a fuel stabilizer was not used for the storage.

Reinstall battery. Refer to *CHARGING SYSTEM*.

Using the maintenance chart, perform the items titled EVERY 3 000 km (2,000 mi) OR 100 HOURS OF OPERATION OR 1 YEAR.

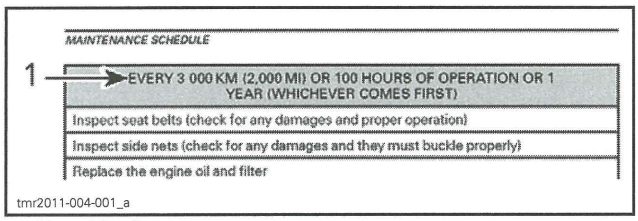

1. Use this chart

NOTE: If the "every 6 000 km (4,000 mi) or 200 hours of operation or 2 years" maintenance service is due, also perform the related items as per the maintenance chart.

Test drive vehicle to confirm proper operation.

SPECIAL PROCEDURES

SERVICE PRODUCTS

Description	Part Number	Page
XPS LUBE	293 600 016	38

GENERAL

NOTE: Component failures resulting from these events are not warrantable.

Refer to the appropriate subsections in this manual for the required tasks outlined in these procedures.

ROLLED OVER VEHICLE

In the event the vehicle was rolled over, check the following.

Inspect suspension components and steering system components.

Inspect body and chassis for damage (welded joints, bent or cracked parts).

Pay particular attention to the cage, shoulder protector, side nets, seat belts and their mechanisms.

⚠ WARNING

Do not use vehicle if any of the safety devices are damaged or inoperative.

Check all fluids level before restarting engine.

NOTICE **Check for oil accumulation in the air intake system. Check air filter.**

After restarting engine, check multifunction gauge if any malfunction is detected.

Troubleshoot and repair as required before using vehicle.

SUBMERGED VEHICLE

In the event the vehicle was submerged, proceed with the following.

NOTICE **A submerged vehicle may cause several damages (short and long term) if not serviced adequately or soon enough. Do not crank or start engine.**

Drain the entire air intake system. Inspect the throttle body. Remove parts as required.

Replace the air filter.

Drain, inspect and clean the CVT.

Empty muffler (removal required).

Unplug ECM, multifunction gauge and DPS connectors, and open fuse boxes. Check for presence of water. Dry as necessary.

Inspect all lights for water intrusion. Dry as required.

Replace the engine oil (without starting the engine).

Remove spark plugs. Crank engine in drowned mode to expel any water.

⚠ CAUTION Keep away from spark plug holes to avoid to be splashed when cranking engine.

Add a small quantity of engine oil in cylinders (approximately 2 teaspoonfuls).

Install spark plugs (replace if required).

Look for water in fuel tank, in doubt, flush fuel tank and refill with new gas.

Look for water in brake system. Replace brake fluid as required.

⚠ WARNING

Before starting engine, use B.U.D.S. and check vehicle for fault codes.

Start the engine and allow it to run at idle speed until the engine reaches its operating temperature.

Stop the engine.

Change engine oil and filter.

NOTE: Change oil as many times as necessary, until there is no whitish appearance in engine oil.

Check gearbox oil. Replace oil if contaminated with water.

Replace oil of front differential.

Replace oil of rear final drive.

Replace the ACS air filter.

Lubricate front and rear suspensions and propeller shaft joints. Refer to *FRONT AND REAR SUSPENSIONS*.

Spray all metal parts with XPS LUBE (P/N 293 600 016).

Test drive to confirm proper operation.

ENGINE REMOVAL AND INSTALLATION

SERVICE TOOLS

Description	Part Number	Page
ENGINE LIFTING TOOL	529 036 022	41

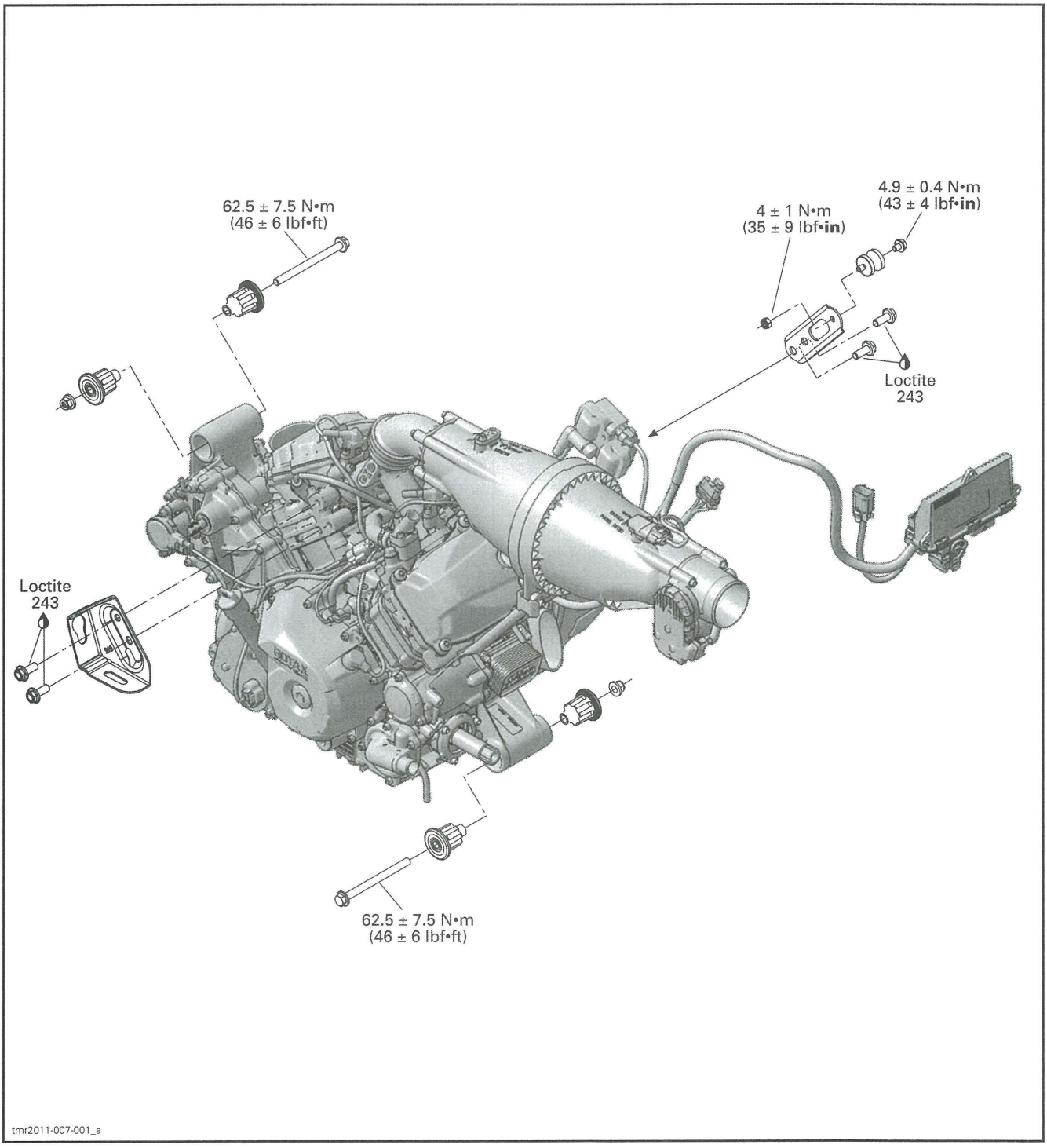

PROCEDURES

ENGINE REMOVAL

Vehicle and Engine Preparation

1. Place vehicle on a workstation that will have access to an engine-lifting hoist.
2. Safely lift and support the vehicle. Refer to *INTRODUCTION* subsection.
3. Unplug the BLACK (-) cable from battery, then the RED (+) cable.

NOTICE Always unplug battery cables exactly in the specified order, the BLACK (-) cable first.

4. Remove the front section of the cage.
5. Remove seats.
6. Refer to *BODY* subsection and remove the following plastic parts:
   - Upper and lower consoles
   - LH and RH lateral console panels
   - Under-seat storage compartment
   - Fuel tank cowl
   - Glove box
   - RH inner panel.
7. Drain engine oil. Refer to *LUBRICATION SYSTEM* subsection.

NOTE: Drain engine oil only if engine overhaul is necessary.

8. Drain the engine coolant. Refer to *COOLING SYSTEM* subsection.
9. Remove fuel tank. Refer to *FUEL TANK AND FUEL PUMP* subsection.
10. Remove the LH passenger handhold bar.

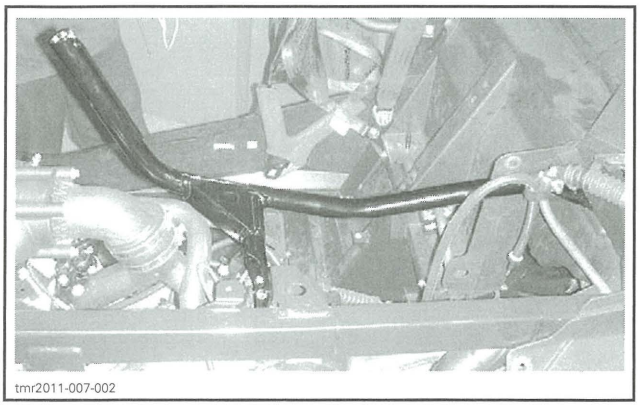
tmr2011-007-002

11. Remove the panel reinforcement support.

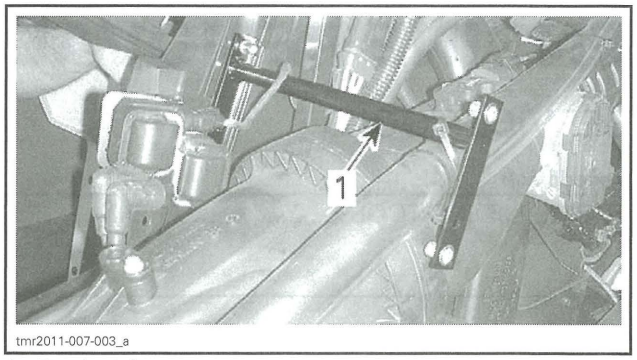

tmr2011-007-003_a

1. Panel reinforcement support

12. Disconnect both engine coolant hoses at cylinder heads.
13. Remove the plenum and the air intake manifold.
    13.1 Loosen clamp securing throttle body to plenum.
    13.2 Detach the plenum support from the front cylinder head.
    13.3 Unscrew air intake manifold from cylinder heads.
    13.4 Remove plenum and air intake manifold as an assembly.

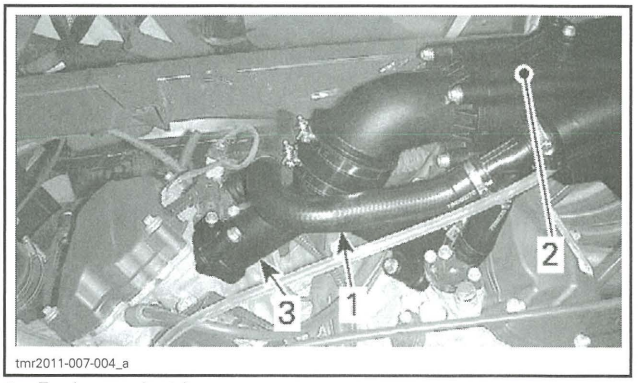

tmr2011-007-004_a

1. Engine coolant hoses
2. Plenum
3. Air intake manifold

14. Remove the shift plate.
15. Remove the shifter cable bracket.

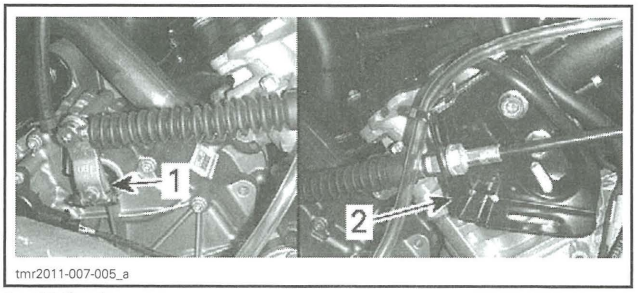

tmr2011-007-005_a

1. Shift plate
2. Shifter cable bracket

16. Remove the front and rear head pipes. Refer to *EXHAUST SYSTEM* subsection.
17. Disconnect the coolant hose at water pump.
18. Disconnect the gearbox vent hose.
19. Remove the CVT outlet duct.
20. Unplug and remove the CTS (coolant temperature sensor).
21. Remove the coolant plastic housing from the rear cylinder head.

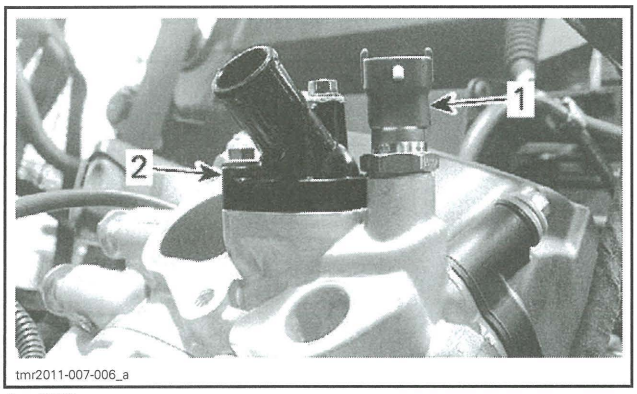

tmr2011-007-006_a

1. CTS
2. Coolant plastic housing

22. Detach the shifter cable from its bracket and remove it.

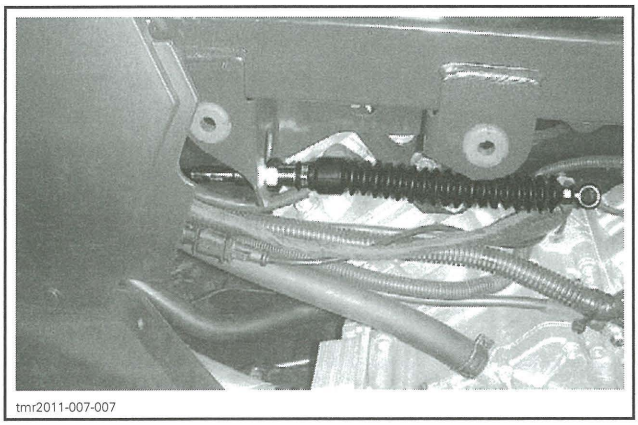
tmr2011-007-007

23. Remove the upper engine support with its rubber isolator.

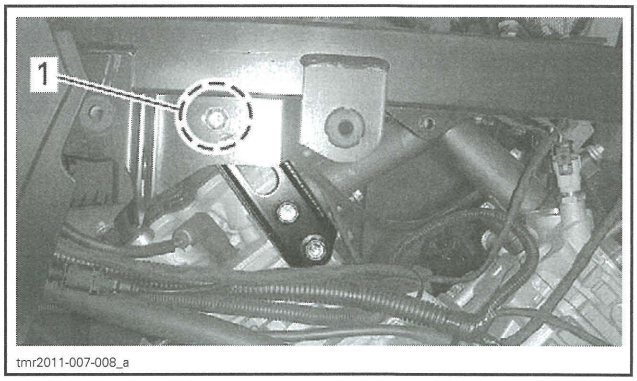

tmr2011-007-008_a

1. Rubber isolator is located between frame and engine support

24. Disconnect the CVT inlet duct from the CVT cover.
25. Disconnect the crankcase vent hose.
26. Unplug all remaining connectors and remove required cables from engine. Cut all necessary locking ties.
    - Spark plug cables
    - Starter cable (retaining nut on starter body)
    - GBPS (Gear Box Position Sensor)
    - Vehicle speed sensor
    - Actuator connector
    - Neutral switch
    - OPS (Oil Pressure Sensor)
    - CPS (Crankshaft Position Sensor)
    - Engine ground cable (screwed on LH side of the engine)
    - Magneto.

Lifting Engine

1. Install the ENGINE LIFTING TOOL (P/N 529 036 022).

tmr2011-007-009

2. Remove retaining screws on front and rear propeller shafts.
3. Remove the front and rear engine support bolts.

4. Carefully lower the rear of the engine enough to reinstall temporally the engine support bolt.
5. Insert a spacer (± 9.5 mm (3/8 in) of thickness) between the engine support and the bolt.

NOTE: The spacer used in the following illustration is an adjustable wrench of 25 cm (10 in).

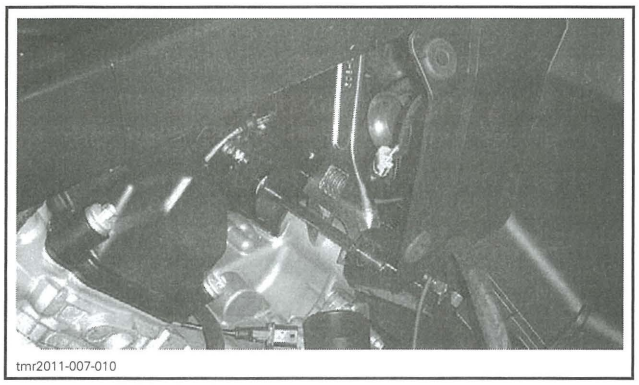
tmr2011-007-010

6. Raise the front of engine to separate front propeller shaft from engine.

NOTE: If the propeller shaft cannot be removed easily, remove bolts retaining the front differential to create more space. Refer to *FRONT DRIVE* subsection.

7. Lower the front of engine to remove the rear engine support bolt and the spacer.
8. Remove engine from vehicle.

ENGINE INSTALLATION

The installation is the reverse of the removal procedure. However, pay attention to the following.

Prior to install engine, inspect condition of engine mounts.

Install the rear propeller shaft onto engine output shaft.

Connect the front propeller shaft to engine output shaft while lowering engine.

Install rear and front engine mounting bolts then torque all mounting bolts.

NOTE: Do not install plastic parts, seats and cage front portion prior to *FINAL ASSEMBLY.*

Final Assembly Procedure

1. Fill engine with the recommended oil and quantity. Refer to *LUBRICATION SYSTEM* subsection.
2. Fill and bleed cooling system. Refer to *COOLING SYSTEM* subsection.
3. Check for any leaks.
4. Reinstall plastic parts, seats and the front portion of the cage.
5. Test drive vehicle to confirm proper operation.

ENGINE MOUNTS

NOTE: Use the same procedure for the front and rear engine mounts.

Engine Mount Removal

Insert a punch into engine mount bushing and push the opposite engine mount out.

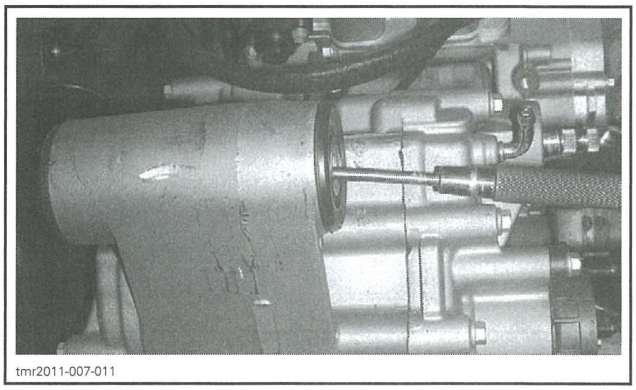
tmr2011-007-011

Engine Mount Installation

The installation is the reverse of the removal procedure.

AIR INTAKE SYSTEM

SERVICE PRODUCTS

Description	Part Number	Page
LOCTITE 5910	293 800 081	46

AIR FILTER HOUSING

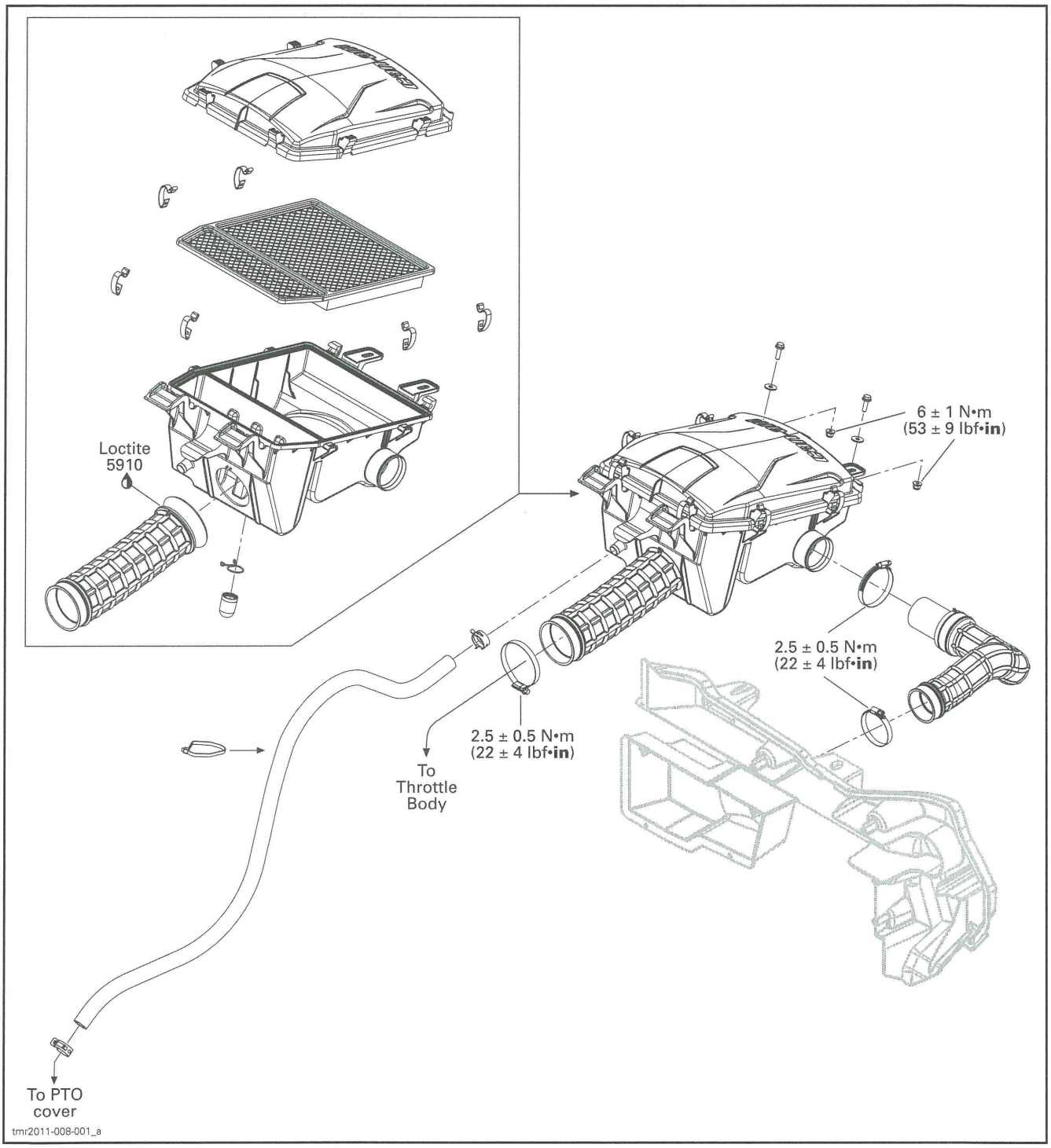

GENERAL

NOTICE Never modify the air intake system. Otherwise, engine performance degradation or damage can occur. The engine is calibrated to operate specifically with these components.

PROCEDURES

AIR FILTER

For air filter servicing, refer to *PERIODIC MAINTENANCE PROCEDURES* subsection.

AIR FILTER HOUSING

Air Filter Housing Removal

1. Remove the following parts:
   1.1 Service cover

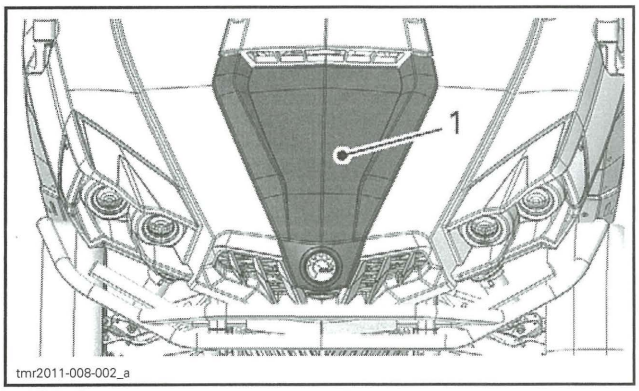

1. Service cover

   1.2 RH inner panel.

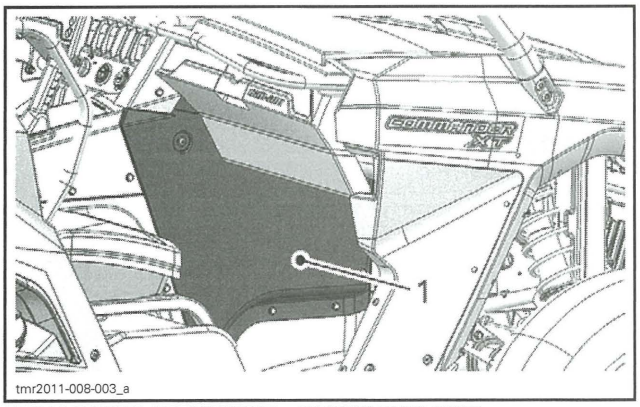

FROM INSIDE OF COCKPIT – PASSENGER SIDE
1. RH inner panel

2. Remove retaining bolts of air filter housing.

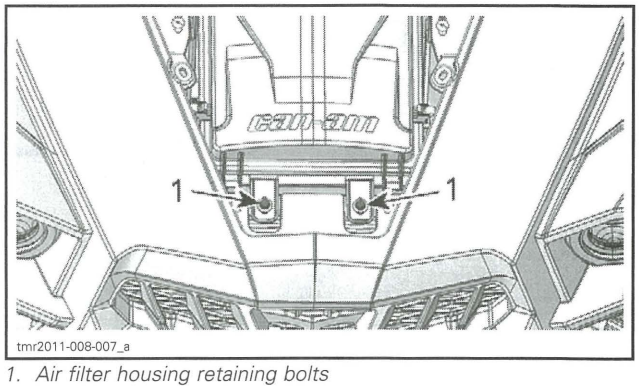

1. Air filter housing retaining bolts

3. Disconnect air inlet hose from the LH side of air filter housing.

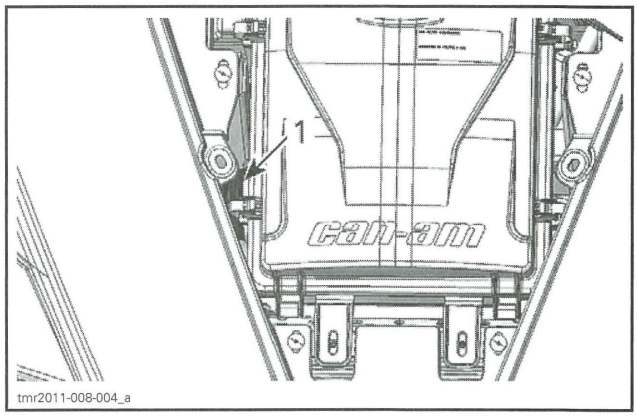

1. Air inlet hose

4. Disconnect intake adapter from throttle body.

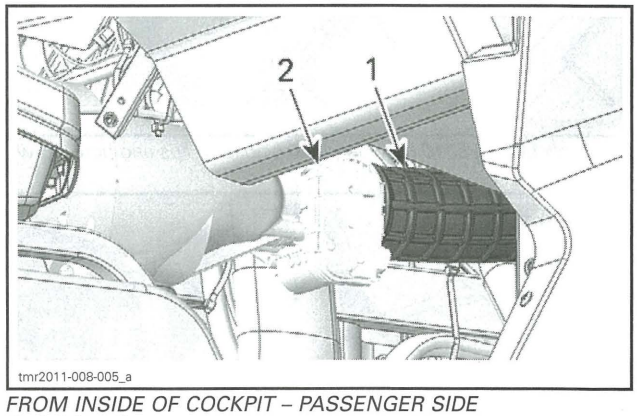

FROM INSIDE OF COCKPIT – PASSENGER SIDE
1. Intake adapter
2. Throttle body

5. Disconnect vent hose from the rear of air filter housing.

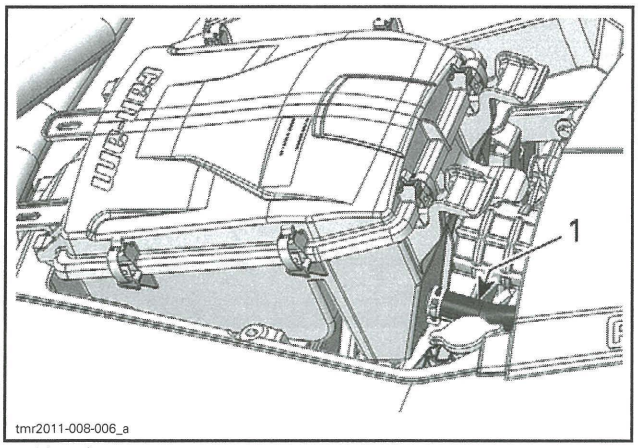

1. Vent hose

Air Filter Housing Installation

For installation, reverse the removal procedure but pay attention to the following.

If the intake adapter is removed, reseal it with LOCTITE 5910 (P/N 293 800 081) and align its recess with the notch on air filter housing.

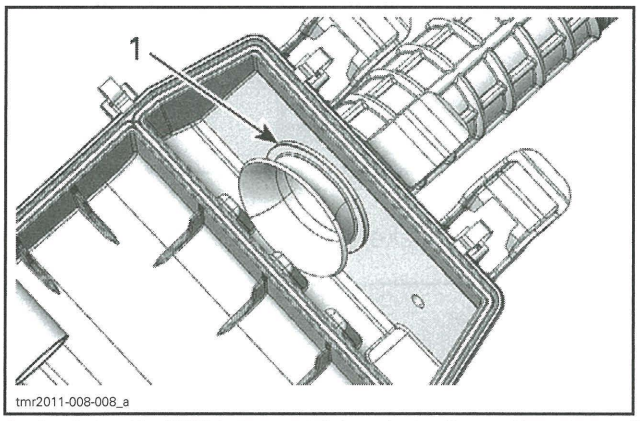

1. Apply Loctite 5910 between intake adapter lips and housing wall

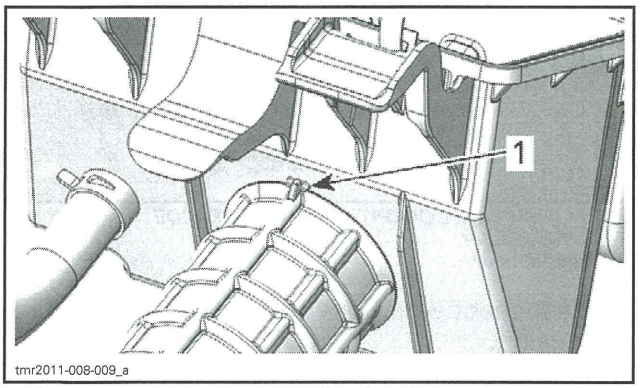

1. Intake adapter recess into air filter housing notch

TORQUE	
Gear clamps	2.5 N•m ± 0.5 N•m (22 lbf•**in** ± 4 lbf•**in**)
Air filter housing nuts	6 N•m ± 1 N•m (53 lbf•**in** ± 9 lbf•**in**)

EXHAUST SYSTEM

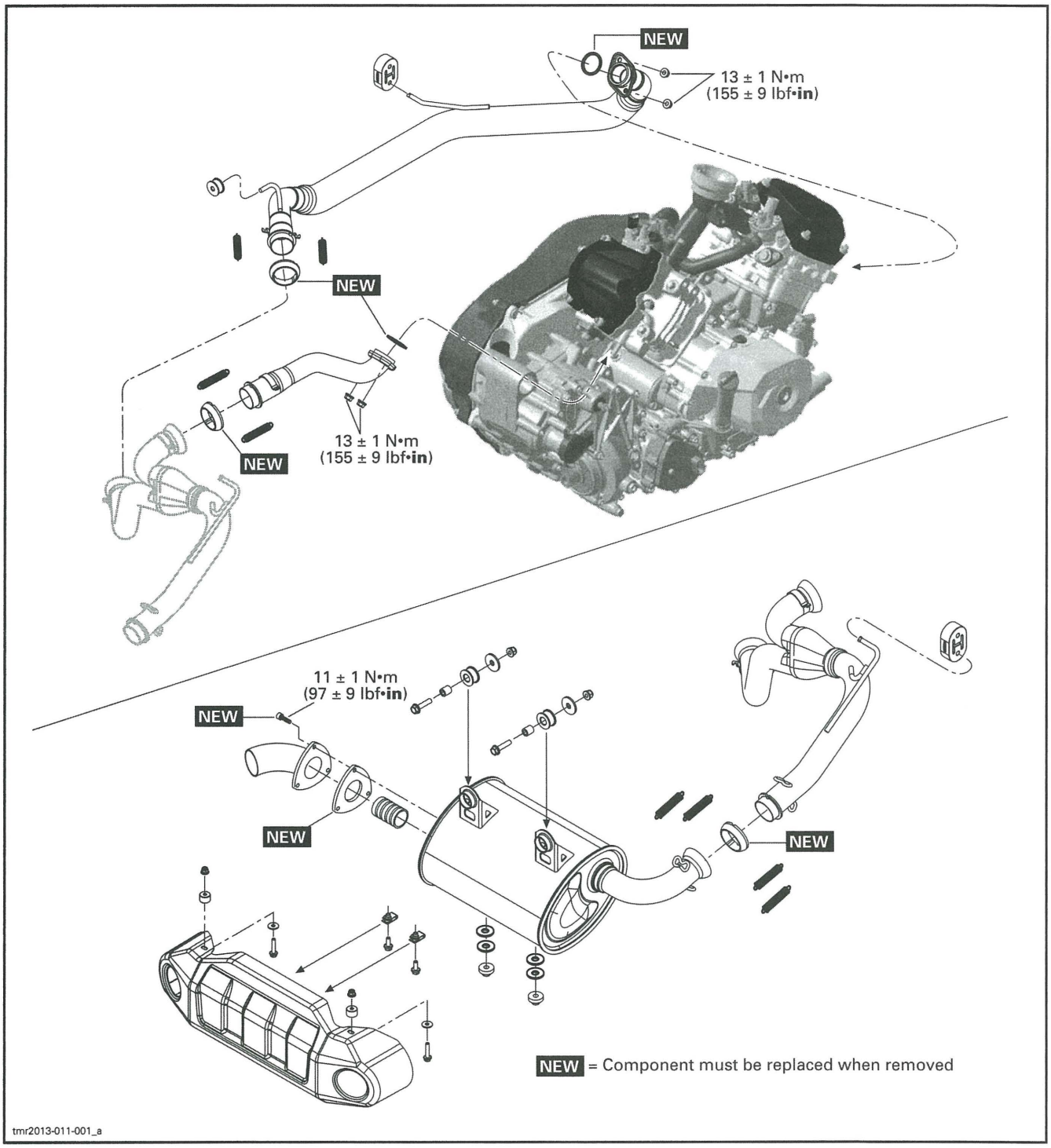

GENERAL

⚠ WARNING

Never touch exhaust system components immediately after the engine has run.

PROCEDURES

SPARK ARRESTER

For spark arrester servicing, refer to *PERIODIC MAINTENANCE PROCEDURES* subsection.

MUFFLER

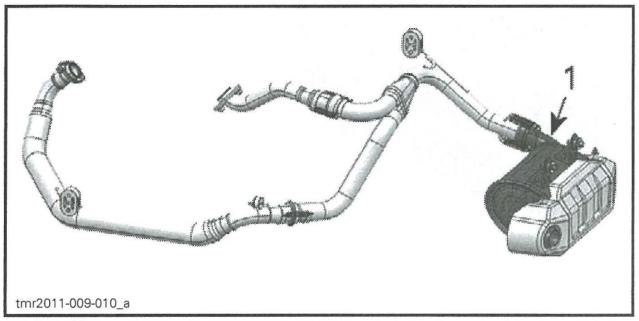

1. Muffler

Muffler Removal

1. Remove the muffler cover.

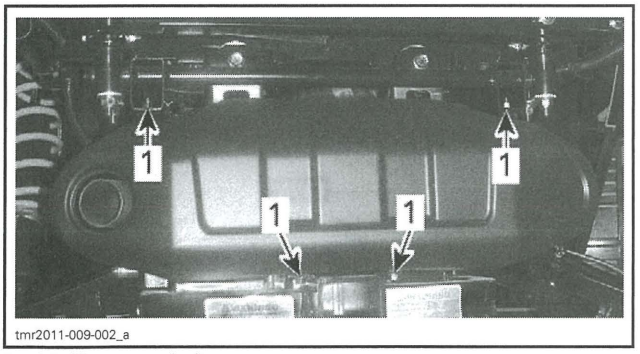

1. Muffler cover bolts

2. Open cargo box and detach springs from the "Y" exhaust pipe.

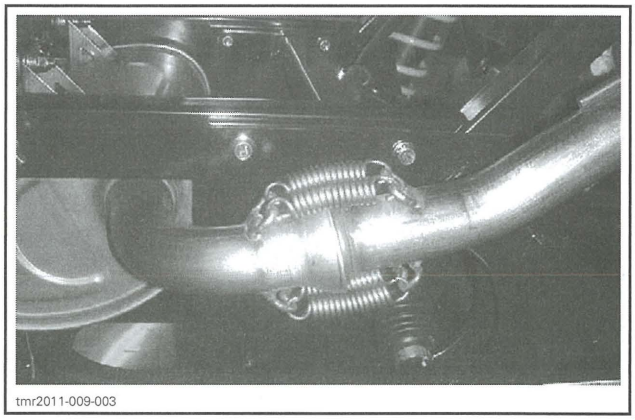

3. Remove muffler retaining bolts.

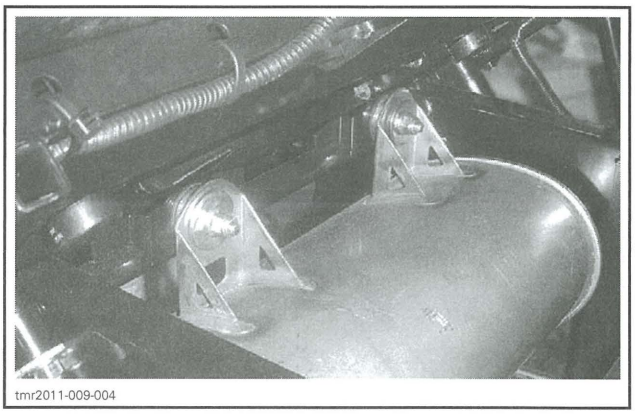

4. Remove the muffler.
5. Discard the gasket at the end of "Y" exhaust pipe.

Muffler Inspection

Check muffler for cracks or other damages. Replace if necessary.

Muffler Installation

For the installation, reverse the removal procedure.

"Y" EXHAUST PIPE

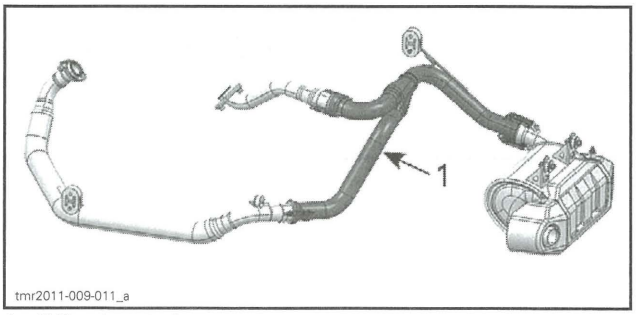

1. "Y" exhaust pipe

"Y" Exhaust Pipe Removal

1. Open the cargo box.
2. Remove the following parts:
   - Springs from head pipes
   - Muffler
   - "Y" exhaust pipe from vehicle.

"Y" Exhaust Pipe Inspection

Check "Y" exhaust pipe for cracks, bending or other damages. Replace if need.

Check if the rubber support is brittle, hard or otherwise damage. Replace if need.

"Y" Exhaust Pipe Installation

The installation is the reverse of the removal procedure.

HEAD PIPE (FRONT CYLINDER)

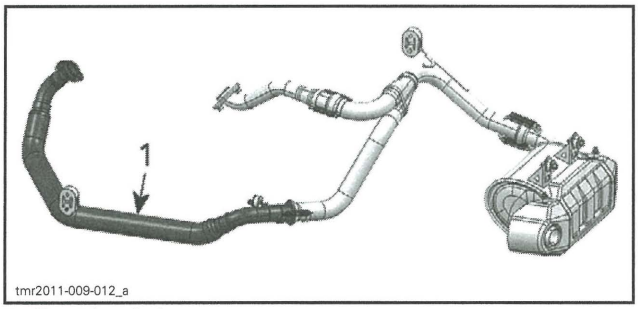

1. Front head pipe

Front Head Pipe Removal

1. Refer to *BODY* subsection and remove the following plastic parts:
   - LH lateral console panel
   - Under seat storage compartment.
2. Remove the following parts:
   - Springs from "Y" exhaust pipe
   - Rubber support
   - Head pipe nuts.
3. Remove front head pipe from vehicle according to following sub-steps:

   NOTE: The space to remove the front head pipe is limited. When the head pipe is positioned correctly as shown, it can be removed easily without force.

   3.1 Position the rubber support rod near the front of the seat bracket.

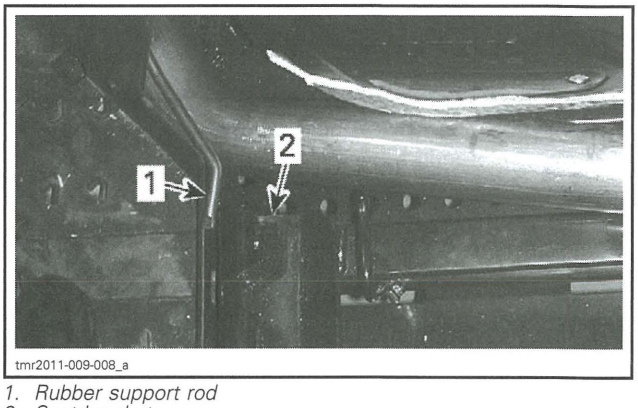

1. Rubber support rod
2. Seat bracket

3.2 Turn and lift the rear end of the head pipe.

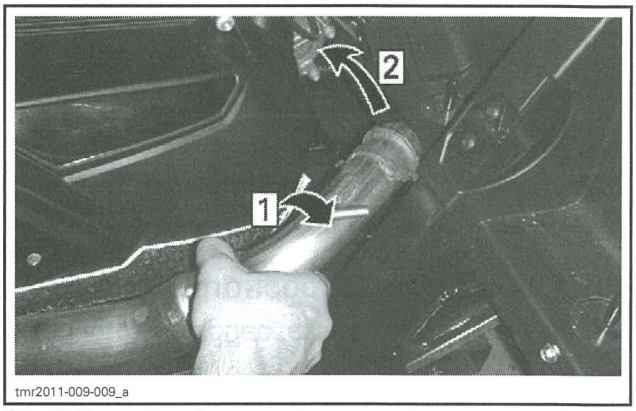

Step 1: Turn outward
Step 2: Lift

3.3 Remove head pipe from vehicle.

Front Head Pipe Inspection

Check head pipe for cracks, bending or other damages. Replace if need.

Check if the rubber support is brittle, hard or otherwise damage. Replace if need.

Front Head Pipe Installation

The installation is the reverse of the removal procedure. However, pay attention to the following.

Install NEW exhaust gaskets.

TORQUE	
Head pipe nuts	13 N•m ± 1 N•m (115 lbf•**in** ± 9 lbf•**in**)

HEAD PIPE (REAR CYLINDER)

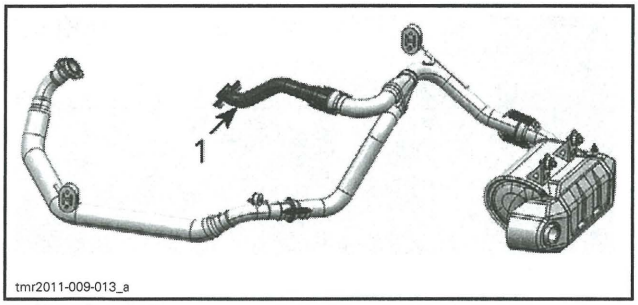

1. Rear head pipe

Rear Head Pipe Removal

1. Remove the following parts:
   - Springs from "Y" exhaust pipe
   - RH lateral console panel, refer to *BODY* subsection
   - Head pipe nuts.
2. Remove head pipe from the vehicle.
3. Remove and discard exhaust gaskets.

Rear Head Pipe Inspection

Check head pipe for cracks, bending or other damages. Replace if need.

Check if the rubber support is brittle, hard or otherwise damage. Replace if need.

Rear Head Pipe Installation

The installation is the reverse of the removal procedure. However, pay attention to the following.

Install NEW exhaust gaskets.

TORQUE	
Head pipe nuts	13 N•m ± 1 N•m (115 lbf•**in** ± 9 lbf•**in**)

LUBRICATION SYSTEM

SERVICE TOOLS

Description	Part Number	Page
ADAPTER HOSE	529 035 652	54
DISCONNECT TOOL	529 035 714	54
PRESSURE GAUGE	529 035 709	54

SERVICE PRODUCTS

Description	Part Number	Page
LOCTITE 243 (BLUE)	293 800 060	56, 60

COMPONENTS

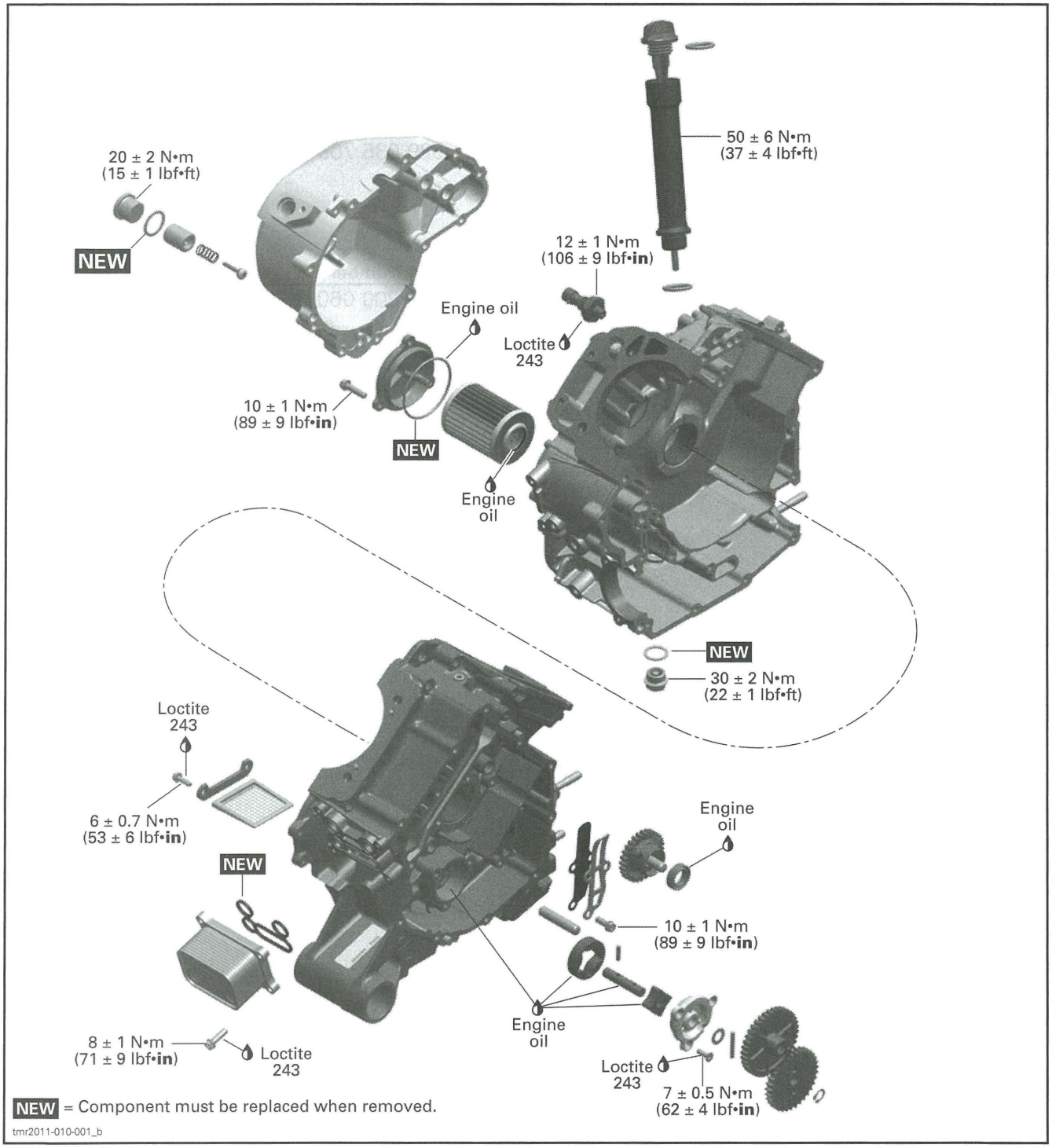

NEW = Component must be replaced when removed.

tmr2011-010-001_b

ENGINE LUBRICATION CIRCUIT

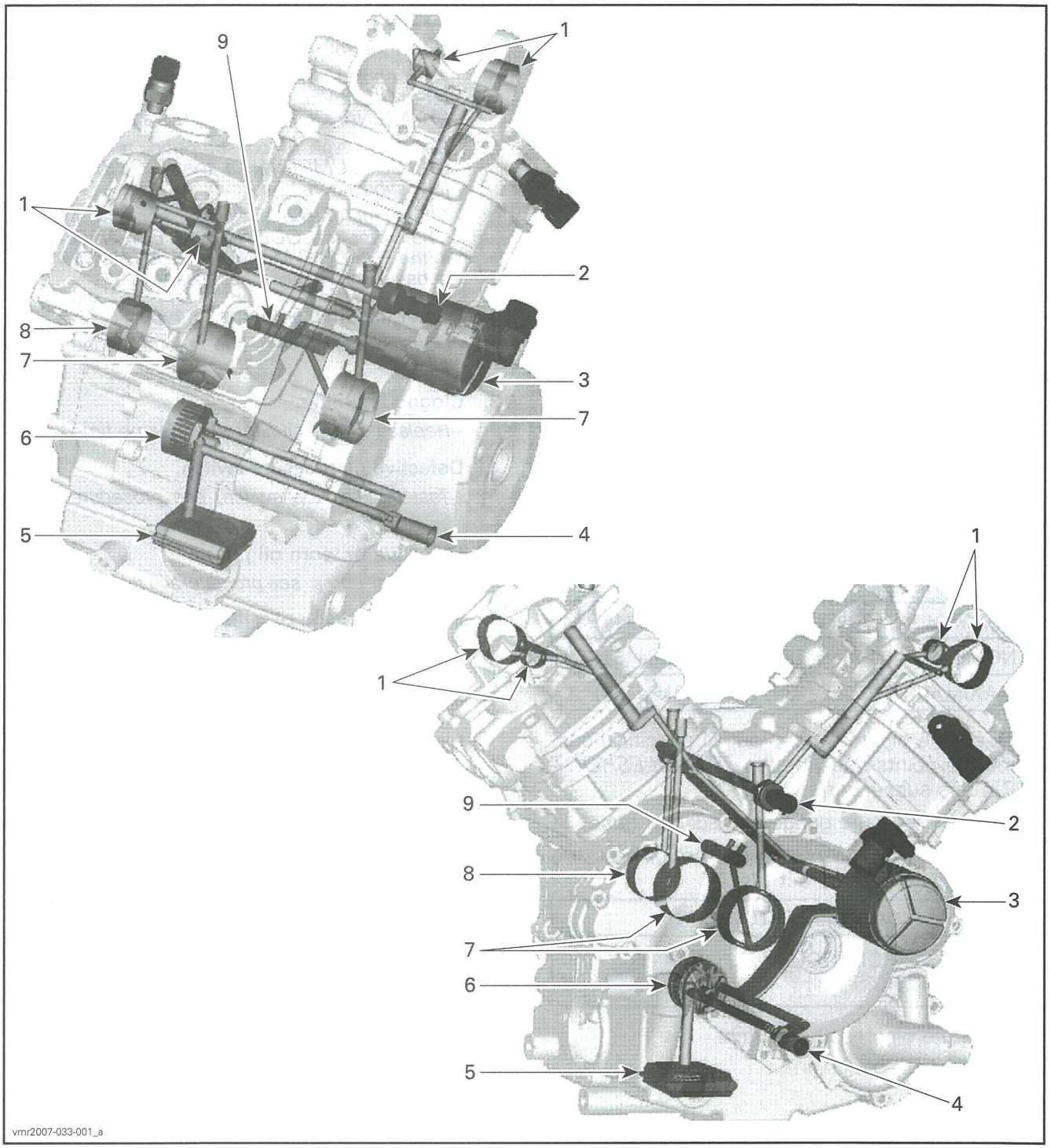

1. *Camshaft bearings*
2. *Oil pressure switch*
3. *Oil filter*
4. *Oil pressure regulator valve*
5. *Oil strainer*
6. *Oil pump*
7. *Crankshaft main bearings*
8. *Crankshaft support bearing*
9. *Connecting rod bearings*

INSPECTION

ENGINE OIL PRESSURE

NOTE: The engine oil pressure test should be done with a warm engine 100°C (212°F) and the recommended oil.

Remove the oil pressure switch. Refer to *OIL PRESSURE SWITCH* in this subsection.

Use the pressure gauge with the proper adapter hose.

REQUIRED TOOL	
PRESSURE GAUGE (P/N 529 035 709)	
ADAPTER HOSE (P/N 529 035 652)	

The engine oil pressure should be within the following values.

OIL PRESSURE	1250 RPM	6000 RPM
MINIMAL	70 kPa (10 PSI)	300 kPa (44 PSI)
NOMINAL	150 kPa (22 PSI)	350 kPa (51 PSI)
MAXIMAL	250 kPa (36 PSI)	450 kPa (65 PSI)

If the engine oil pressure is out of specifications, check the points described in *TROUBLESHOOTING* in this subsection.

Remove oil pressure gauge and adapter hose.

NOTE: To remove adapter hose from oil pressure gauge, use the disconnect tool.

REQUIRED TOOL	
DISCONNECT TOOL (P/N 529 035 714)	

Reinstall the oil pressure switch.

TROUBLESHOOTING

LOW OR NO OIL PRESSURE

1. **Oil level is too low.**
   - *Refill engine with recommended engine oil. Refer to OIL LEVEL VERIFICATION in the PERIODIC MAINTENANCE PROCEDURES subsection.*
   - *Check for high oil consumption, refer to HIGH OIL CONSUMPTION in the TROUBLESHOOTING subsection.*
   - *Check for engine oil leaks. For leak indicator hole, refer to COOLING SYSTEM INSPECTION in the PERIODIC MAINTENANCE PROCEDURES subsection. Repair if necessary.*
2. **Use of unsuitable engine oil type.**
   - *Replace engine oil by the recommended engine oil.*
3. **Clogged oil filter.**
   - *Replace oil and oil filter at the same time.*
4. **Defective oil pressure switch.**
   - *Test oil pressure switch, see procedure in this subsection.*
5. **Defective or worn oil pump.**
   - *Check oil pump, see procedure in this subsection.*
6. **Defective engine oil pressure regulator.**
   - *Check engine oil pressure regulator, see procedure in this subsection.*
7. **Worn plain bearings in crankcase.**
   - *Check plain bearings clearance, refer to BOTTOM END subsection.*
8. **Clogged engine oil strainer.**
   - *Clean engine oil strainer, see procedure in this subsection.*

OIL CONTAMINATION

1. **Defective water pump seal ring or rotary seal.**
   - *Check for oil or coolant leak from indicator hole near water pump, refer to COOLING SYSTEM INSPECTION in the PERIODIC MAINTENANCE PROCEDURES subsection. Replace seal if necessary.*
2. **Cylinder head or cylinder base gasket leak.**
   - *Retighten cylinder head to specified torque, refer to TOP END subsection. Replace gasket if tightening does not solve the problem.*
3. **Engine internal damage.**
   - *Repair engine.*
4. **Oil cooler gasket leak.**
   - *Replace oil cooler gasket and change engine oil.*

HIGH OIL CONSUMPTION

1. **Leaking breather oil seal.**
   - *Check if the oil seal of the breather is brittle, hard or damaged. Refer to BOTTOM END subsection.*
2. **Valve stem seals worn or damaged.**
   - *Replace valve stem seals.*
3. **Worn piston rings (blue exhaust smoke).**
   - *Replace piston rings.*

PROCEDURES

OIL COOLER

Oil Cooler Access

Refer to *BODY* and remove:
- Upper console
- Lower console
- RH lateral console panel
- RH inner panel
- Fuel tank cowl.

Oil Cooler Removal

Refer to the *PERIODIC MAINTENANCE PROCEDURES* subsection to:
- Drain engine oil.
- Drain engine coolant.

Remove oil cooler retaining screws.

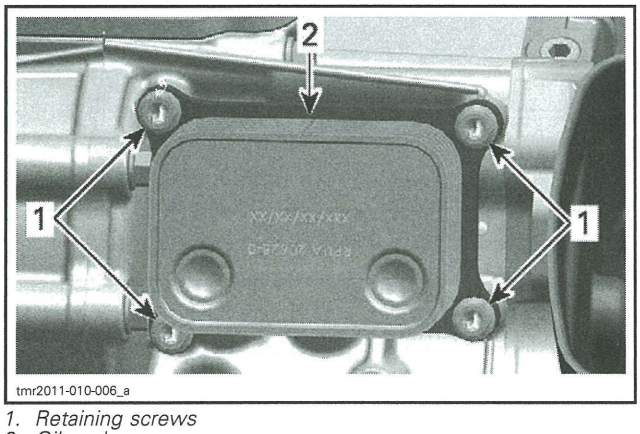

1. *Retaining screws*
2. *Oil cooler*

Place rags or towels under oil cooler to catch remaining oil and coolant.

Remove oil cooler and discard gasket.

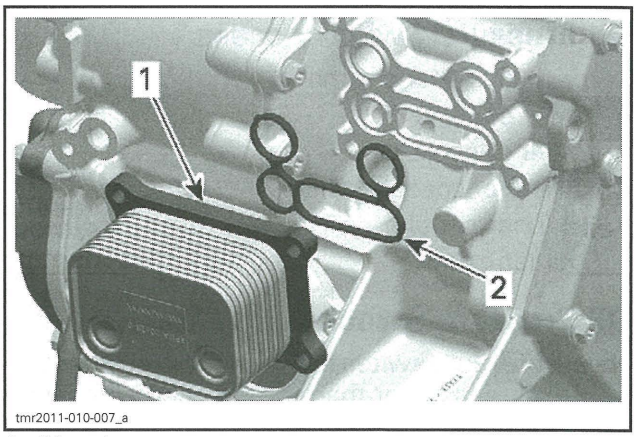

1. *Oil cooler*
2. *Gasket*

Oil Cooler Inspection

Check oil cooler for cracks or other damage.

Replace if necessary.

Oil Cooler Installation

For installation, reverse the removal procedure. Pay attention to the following details.

Wipe off any oil and coolant spillage.

Install a **NEW** gasket.

Refer to *PERIODIC MAINTENANCE PROCEDURES* subsection and carry out the following:
- Refill engine oil with recommended oil and at the proper oil lever.
- Refill and bleed cooling system.

OIL PRESSURE SWITCH (OPS)

Oil Pressure Switch Location

The oil pressure switch is located at engine MAG side above the magneto cover.

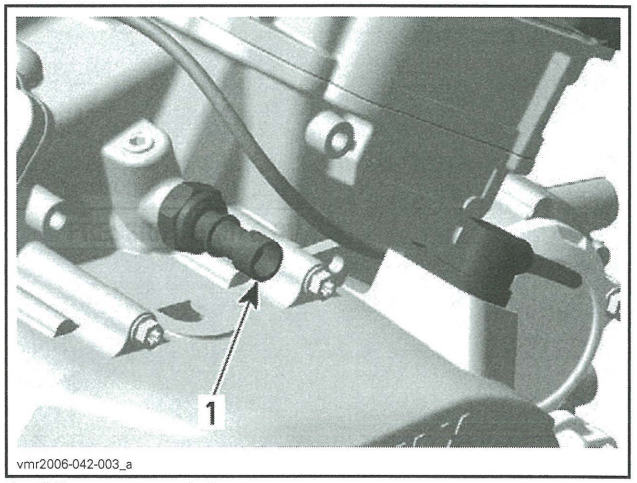

1. *Oil pressure switch*

Oil Pressure Switch Access

Refer to *BODY* and remove:
- Upper console
- Lower console
- RH lateral console panel
- RH inner panel
- Fuel tank cowl.

Oil Pressure Switch Activation

The oil pressure switch activates when the engine oil pressure is lower than the operating pressure.

OIL PRESSURE SWITCH OPERATING PRESSURE
30 kPa ± 10 kPa (4.35 PSI ± 1.45 PSI)

To check the function of the oil pressure switch, an oil pressure test has to be performed. Refer to *ENGINE OIL PRESSURE* in this subsection.

If the engine oil pressure is good perform the oil pressure switch resistance test.

Oil Pressure Switch Resistance Test

Disconnect the connector from the oil pressure switch.

Use a multimeter to check the resistance between as shown.

OPS CONNECTOR		ENGINE NOT RUNNING	ENGINE RUNNING
PIN		RESISTANCE (Ω)	
4	Engine ground	Close to 0 Ω (normally closed switch)	Infinite (open) when pressure reaches 30 kPa ± 10 kPa (4.35 PSI ± 1.45 PSI)

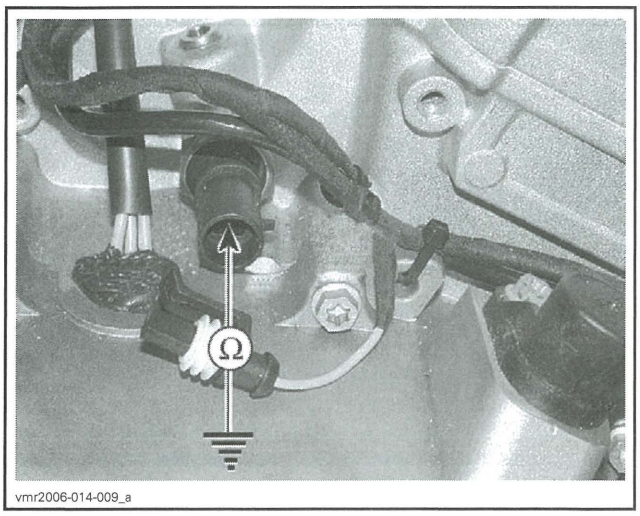

vmr2006-014-009_a

If resistance values are incorrect, replace the oil pressure switch.

If the values are correct, check wiring.

Oil Pressure Switch Removal

Unplug the oil pressure switch connector.

Unscrew and remove oil pressure switch.

Oil Pressure Switch Installation

Tighten oil pressure switch to specified torque.

OIL PRESSURE SWITCH	
Service product	LOCTITE 243 (BLUE) (P/N 293 800 060)
Tightening torque	12 N•m ± 1 N•m (106 lbf•**in** ± 9 lbf•**in**)

ENGINE OIL PRESSURE REGULATOR

Oil Pressure Regulator Location

The oil pressure regulator is located on the engine magneto side (inside magneto cover).

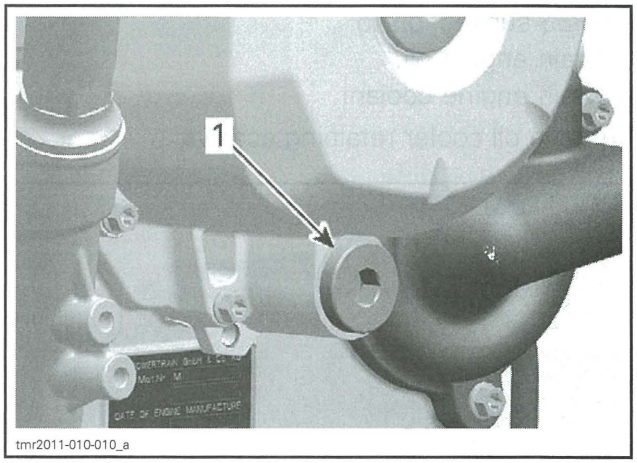

tmr2011-010-010_a

1. Engine oil pressure regulator

NOTE: The oil pressure regulator system works when the oil pressure exceeds 400 kPa (58 PSI).

Oil Pressure Regulator Access

Refer to *BODY* and remove:
- Upper console
- Lower console
- RH lateral console panel
- RH inner panel
- Fuel tank cowl.

Oil Pressure Regulator Removal

Remove plug screw and pull oil pressure regulator out.

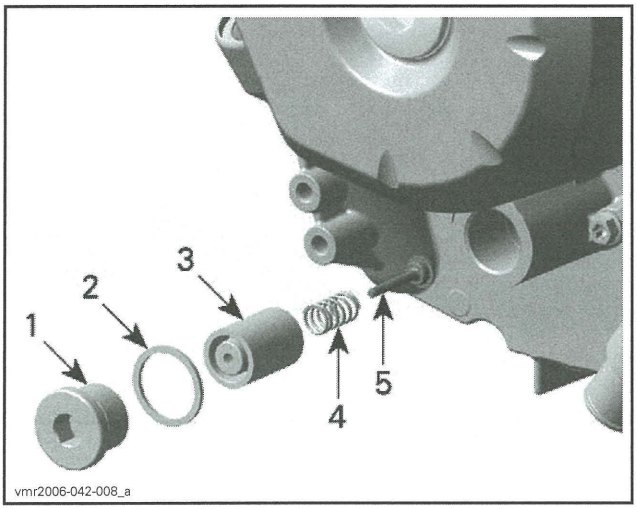

1. *Plug screw*
2. *Gasket ring*
3. *Pressure regulator housing*
4. *Spring*
5. *Pressure regulator valve*

Oil Pressure Regulator Inspection

Inspect pressure regulator housing and valve for scoring or other damages.

Check spring for free length.

SPRING FREE LENGTH	
NEW NOMINAL	39 mm (1.535 in)
SERVICE LIMIT	37 mm (1.457 in)

NOTE: Replace worn or damaged components.

Clean bore and thread in the magneto housing from metal shavings and other contaminations.

Oil Pressure Regulator Installation

For installation, reverse the removal procedure. Pay attention to the following details.

NOTE: At installation always replace the gasket ring of the plug screw by a new one.

OIL PUMP

Oil Pump Location

The oil pump is located on the engine PTO side (behind PTO cover).

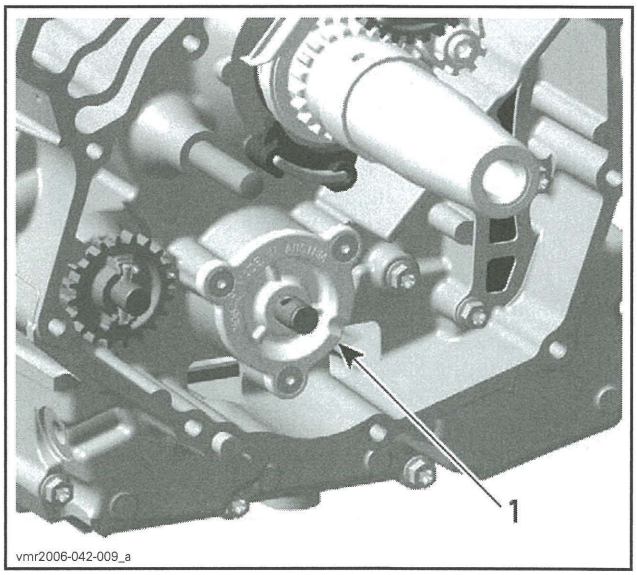

1. *Oil pump*

Oil Pump Removal

Remove the PTO cover. Refer to *PTO COVER* in the *BOTTOM END* subsection.

1. Remove:
   - Retaining ring
   - Oil pump gear
   - Needle pin
   - Thrust washer.

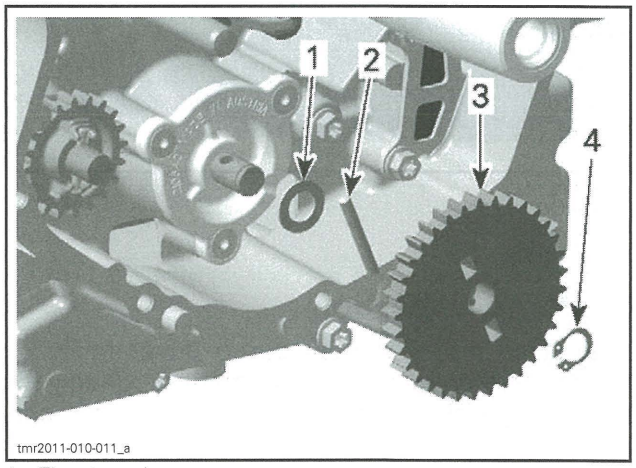

1. *Thrust washer*
2. *Needle pin*
3. *Oil pump gear*
4. *Retaining ring*

2. Remove oil pump cover screws and pull oil pump cover out.

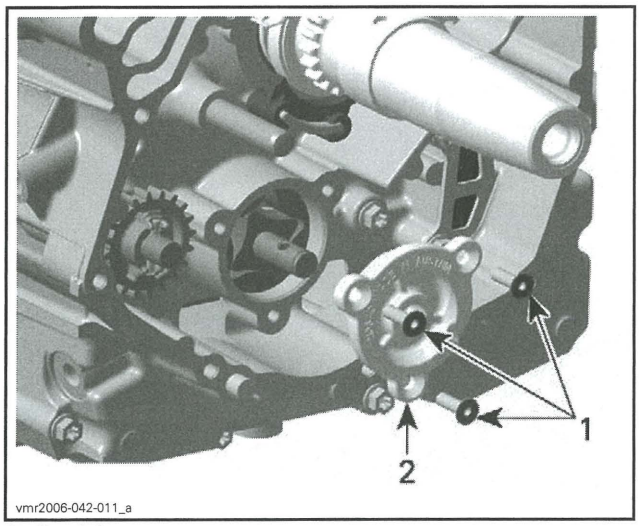

1. Retaining screws
2. Oil pump cover

3. Remove oil pump shaft with needle pin and inner rotor.
4. Remove outer rotor.

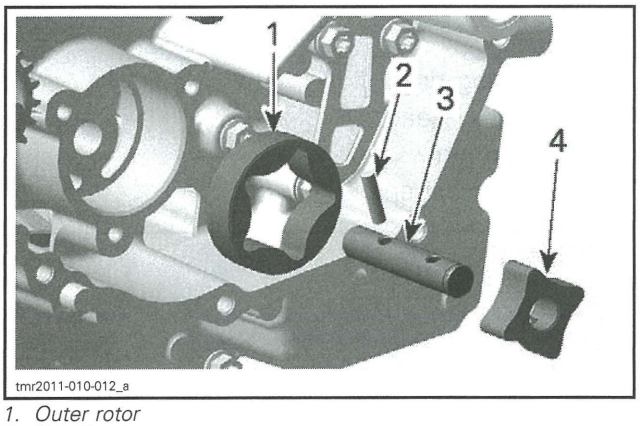

1. Outer rotor
2. Needle pin
3. Oil pump shaft
4. Inner rotor

Oil Pump Inspection

Inspect oil pump and oil pump cover bore for marks, scratches or other damages. Check for scratches in crankcase between outer rotor and oil pump bore. If so, replace damaged parts.

Check oil pump cover for damages and for surface straightness with a straightedge.

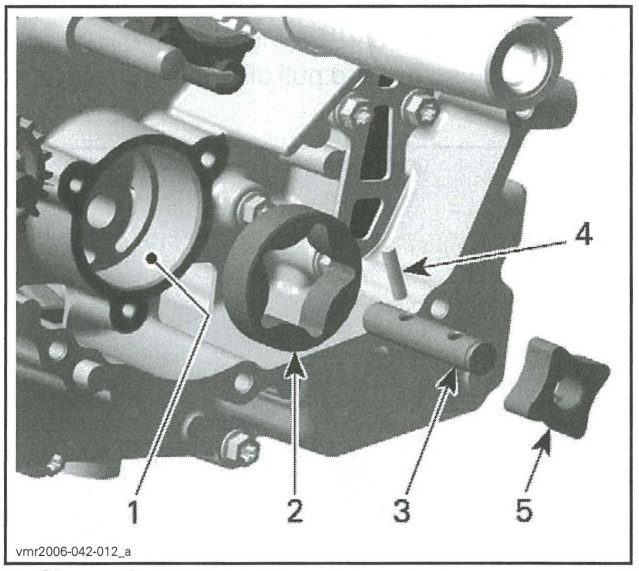

1. Oil pump bore
2. Outer rotor
3. Oil pump shaft
4. Needle pin
5. Inner rotor

Check inner rotor for corrosion pin holes or other damages. If so, replace oil pump shaft assembly.

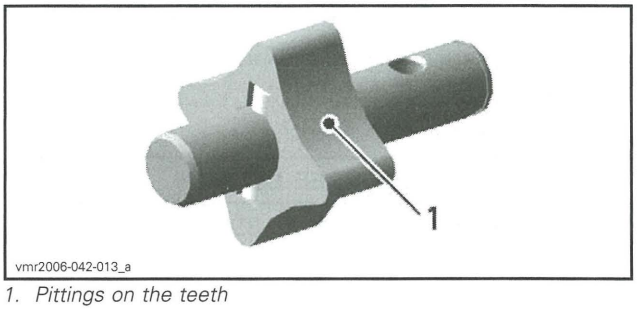

1. Pittings on the teeth

Using a feeler gauge, measure the clearance of inner and outer rotors as shown.

CLEARANCE OF INNER AND OUTER ROTOR	
SERVICE LIMIT	0.25 mm (.0098 in)

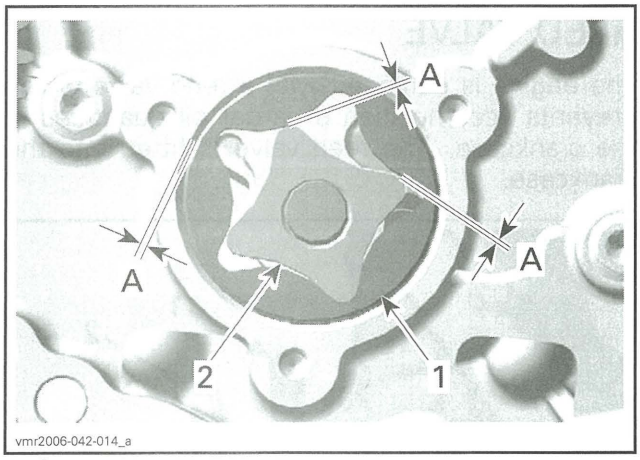

1. Outer rotor
2. Inner rotor
A. 0.25 mm (.0098 in)

If clearance of inner and outer rotors exceeds the tolerance, replace oil pump rotors. Ensure to also check oil pump cover. If damaged, replace the complete oil pump assembly.

If clearance between outer rotor and its bore in crankcase exceeds the tolerance, replace the complete oil pump rotors and/or the crankcase.

Using a depth gauge, measure the axial clearance of the oil pump as shown.

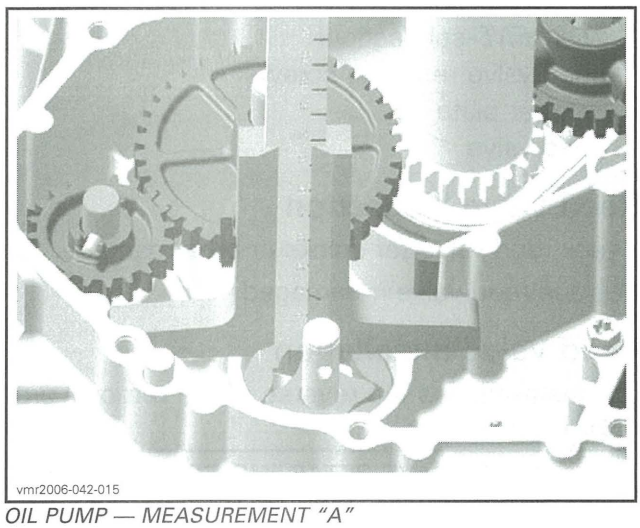

OIL PUMP — MEASUREMENT "A"

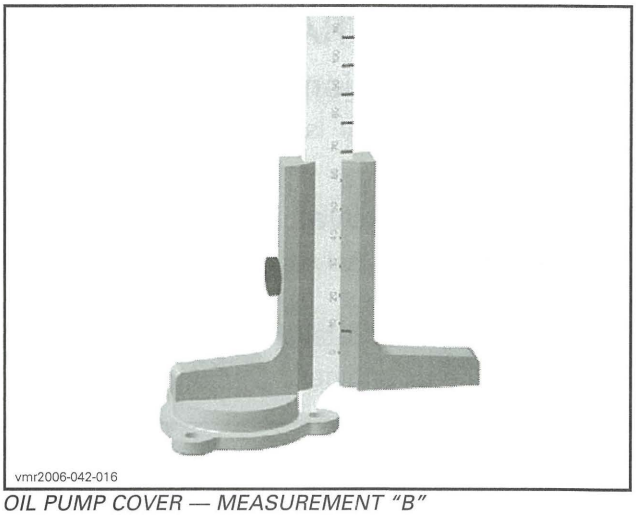

OIL PUMP COVER — MEASUREMENT "B"

Substract measurement "B" from measurement "A" to obtain axial clearance.

OIL PUMP AXIAL CLEARANCE	
SERVICE LIMIT	0.2 mm (.0079 in)

NOTE: When the axial clearance of the oil pump shaft assembly increases, the oil pressure decreases.

Oil Pump Installation

For installation, reverse the removal procedure.

Pay attention to the following details.

NOTE: When installing the oil pump rotors, make sure both markings are on the outer side.

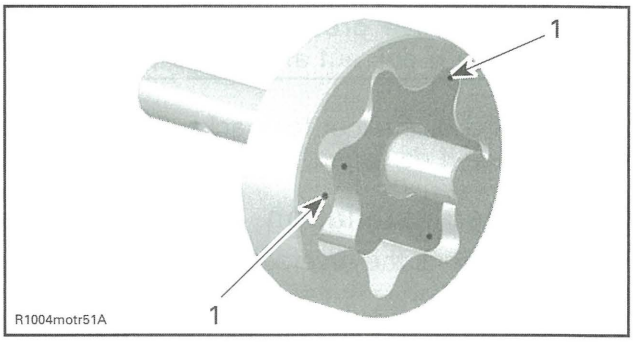

TYPICAL
1. Markings

After reinstallation of the remaining parts, check for smooth operation of the oil pump assembly.

Oil Pump Final Test

After engine is completely reassembled, start engine and make sure oil pressure is within specifications (refer to *ENGINE OIL PRESSURE* in this subsection).

ENGINE OIL STRAINER

Oil Strainer Location

The engine oil strainer is located between both crankcase halves.

Oil Strainer Removal

Separate crankcase halves. Refer to *BOTTOM END* subsection.

Remove screws and retaining plate.

Pull out engine oil strainer.

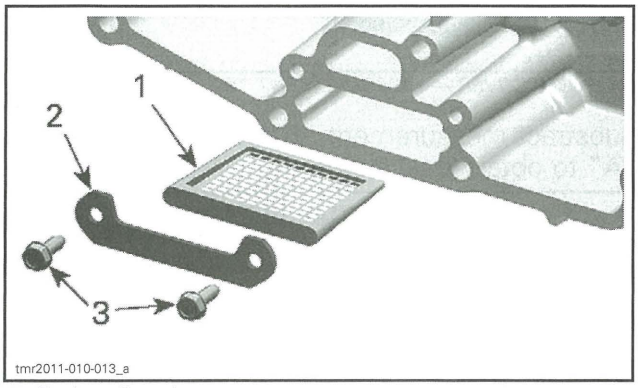

1. *Engine oil strainer*
2. *Retaining plate*
3. *Screws*

Oil Strainer Cleaning and Inspection

Clean engine oil strainer with a part cleaner then use an air gun to dry it.

⚠ WARNING

Always wear eye protector. Chemicals can cause a rash break out and injure your eyes.

Check engine oil strainer for cracks or other damage. Replace if damaged.

Oil Strainer Installation

The installation is the reverse of the removal procedure.

OIL STRAINER RETAINING SCREWS	
Service product	LOCTITE 243 (BLUE) (P/N 293 800 060)
Tightening torque	6 N•m ± 0.7 N•m (53 lbf•**in** ± 6 lbf•**in**)

REED VALVE

The engine is equipped with a reed valve which prevents accumulation of larger oil quantities in the crankcase. The reed valve is fitted into the crankcase.

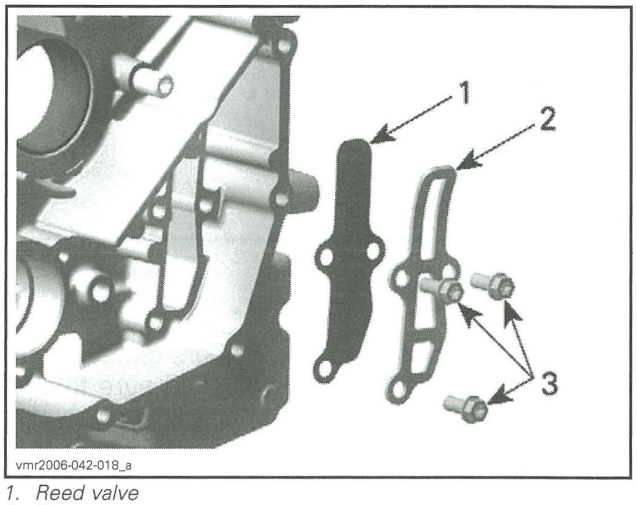

1. *Reed valve*
2. *Stopper*
3. *Screws*

Reed Valve Removal

Remove:

- PTO cover (refer to *PTO COVER* in the *BOTTOM END* subsection)
- Reed valve retaining screws
- Stopper plate
- Reed valve.

Reed Valve Inspection

Check reed valve for cracks or other damage.

Replace reed valve if damaged.

Reed Valve Installation

The installation is the reverse of the removal procedure.

REED VALVE RETAINING SCREWS	
Tightening torque	10 N•m ± 1 N•m (89 lbf•**in** ± 9 lbf•**in**)

COOLING SYSTEM

SERVICE TOOLS

Description	Part Number	Page
BLIND HOLE PULLER KIT	529 036 056	77
HANDLE	420 877 650	78
LARGE HOSE PINCHER	529 032 500	66–67
OIL SEAL PUSHER	529 035 757	78
ROTARY SEAL PUSHER PLATE	529 036 130	75
SEAL PUSHER	529 035 766	75, 79

SERVICE PRODUCTS

Description	Part Number	Page
DOW CORNING 111	413 707 000	78
LOCTITE 243 (BLUE)	293 800 060	67

RADIATOR

800R Engine

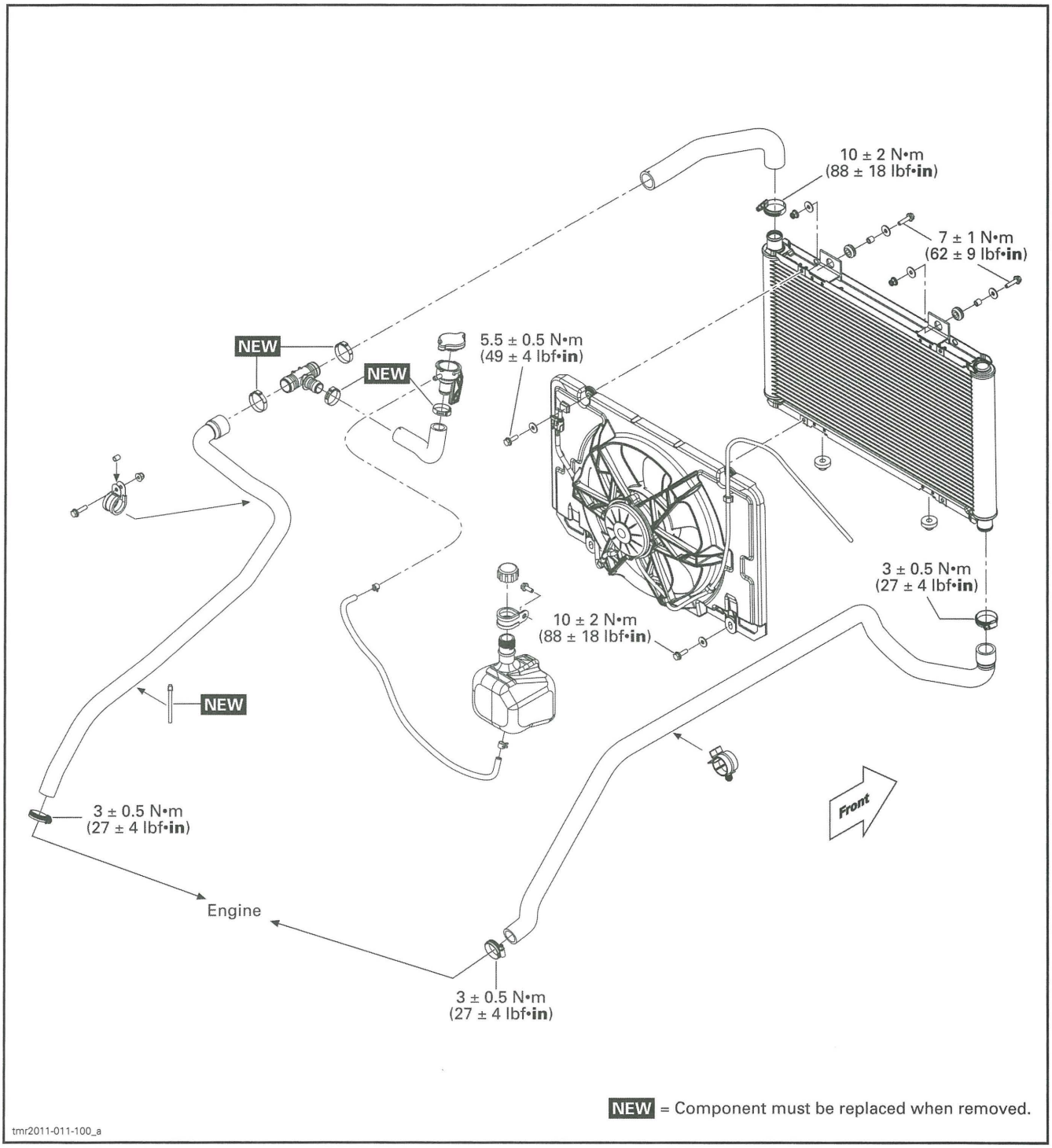

WATER PUMP

1000 Engine

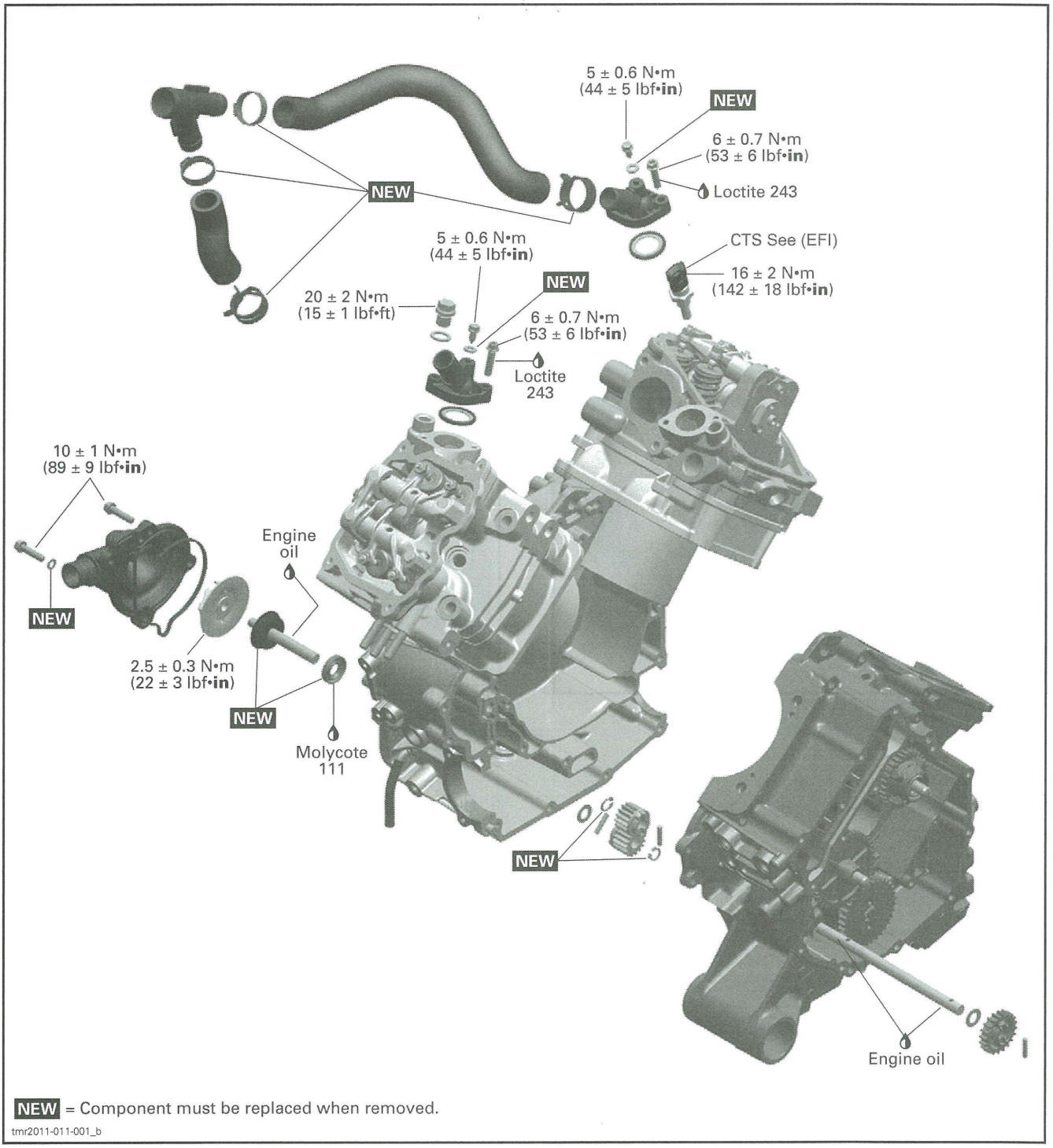

GENERAL

NOTICE Never start engine without coolant. Some engine parts such as the rotary seal on the water pump shaft can be damaged.

PROCEDURES

THERMOSTAT

The thermostat is a single action type.

Thermostat Location

800R Models

The thermostat is located in the thermostat housing at the top of the front cylinder (RH side).

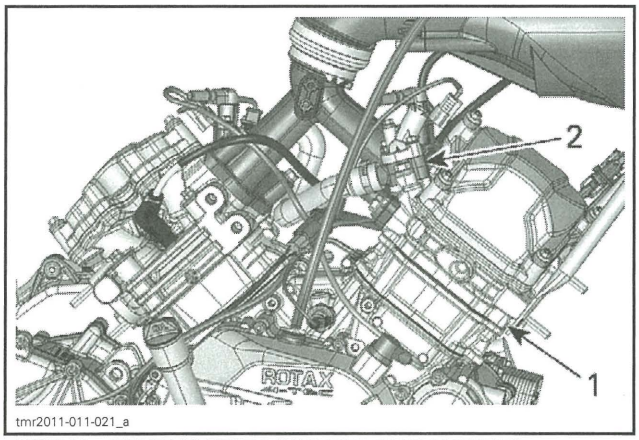

TYPICAL - THERMOSTAT LOCATION 800R MODELS
1. *Front cylinder*
2. *Thermostat housing*

1000 Models

The thermostat is mounted in-line in the cooling system circuit.

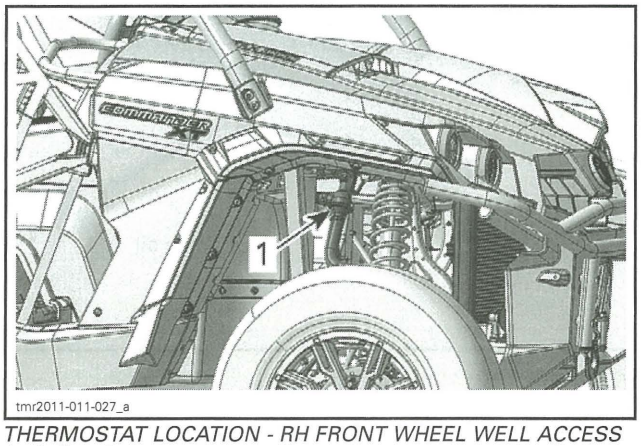

THERMOSTAT LOCATION - RH FRONT WHEEL WELL ACCESS
1. *In-line thermostat*

Thermostat Removal

800R Models

1. Install a hose pincher on both radiator hoses.

REQUIRED TOOL	
LARGE HOSE PINCHER (P/N 529 032 500)	

2. Drain remainder of cooling system, refer to *PERIODIC MAINTENANCE PROCEDURES* subsection.
3. Remove thermostat housing screws and remove thermostat cover.

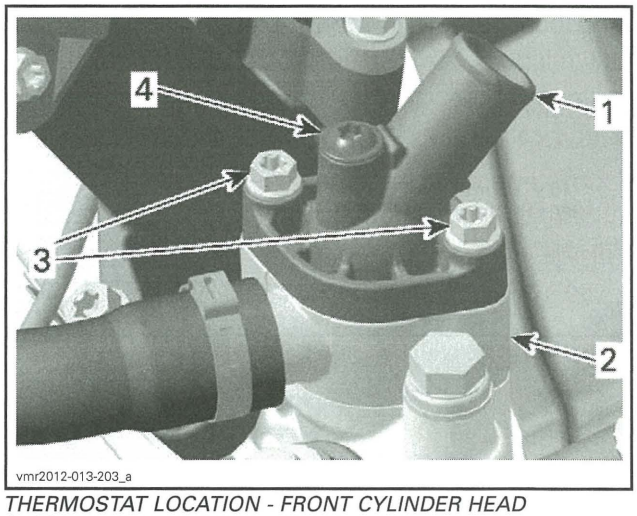

THERMOSTAT LOCATION - FRONT CYLINDER HEAD
1. *Thermostat cover*
2. *Thermostat housing*
3. *Cover screws*
4. *Bleed screw*

4. Pull thermostat and gasket from thermostat housing.

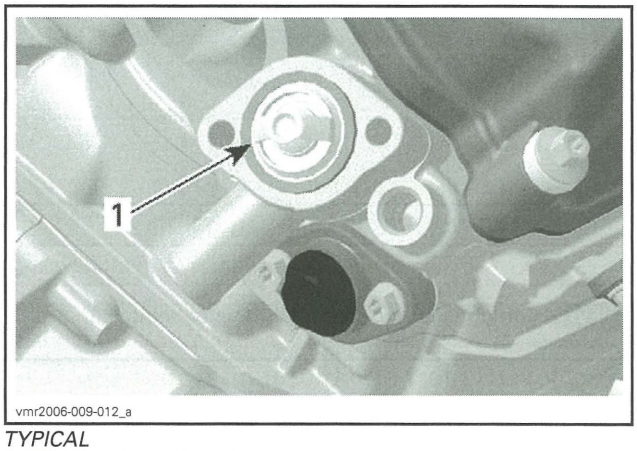

TYPICAL
1. *Thermostat with gasket*

1000 Models

1. Install a hose pincher on both radiator hoses.

REQUIRED TOOL	
LARGE HOSE PINCHER (P/N 529 032 500)	

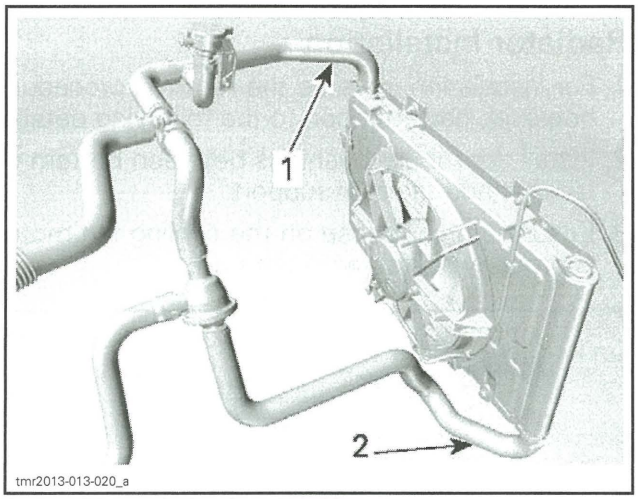

1. *Install hose pincher from LH side*
2. *Install hose pincher from RH side*

2. Drain remainder of cooling system, refer to *PERIODIC MAINTENANCE PROCEDURES* subsection.
3. Remove Oetiker clamps that secure hoses to thermostat.
4. Remove thermostat.

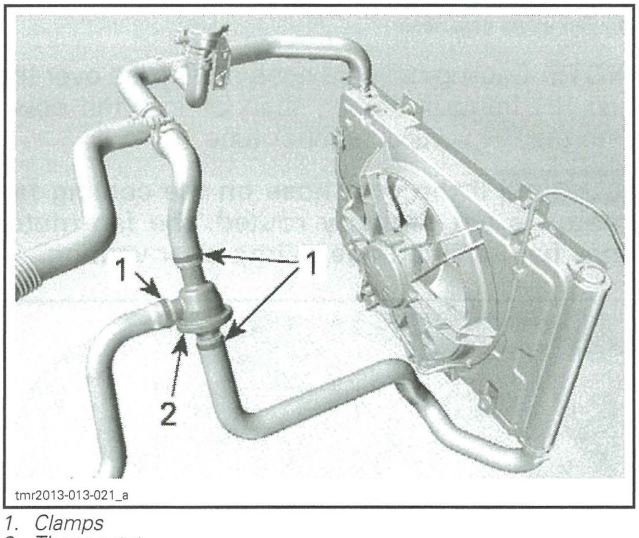

1. *Clamps*
2. *Thermostat*

Thermostat Test

To check thermostat, put it in water and heat the water.

THERMOSTAT OPENING TEMPERATURE		
MODELS	STARTS TO OPEN	FULLY OPEN
800R	65°C (149°F)	75°C (167°F)
1000	65°C (149°F)	88°C (190°F)

Replace thermostat if it does not begin to open at specified temperature.

Check if gasket is brittle, hard or damaged. If so, replace gasket.

Thermostat Installation

800R Models

For installation, reverse the removal procedure. Pay attention to the following.

THERMOSTAT COVER INSTALLATION		
GASKET	PRODUCT	TIGHTENING TORQUE
New	LOCTITE 243 (BLUE) (P/N 293 800 060) on screws	6 N•m ± 0.6 N•m (53 lbf•**in** ± 5 lbf•**in**)

1000 Models

Reverse removal procedures.

All Models

Refill cooling system.

Bleed cooling system, refer to *PERIODIC MAINTENANCE PROCEDURES* subsection.

NOTICE **The cooling system must be bled as specified.**

Check for coolant leaks.

RADIATOR

Radiator Inspection

Check radiating fins for clogging or damage.

Remove insects, mud or other obstructions with compressed air or low pressure water.

Radiator Removal

1. Install a hose pincher on both radiator hoses.

REQUIRED TOOL	
LARGE HOSE PINCHER (P/N 529 032 500)	

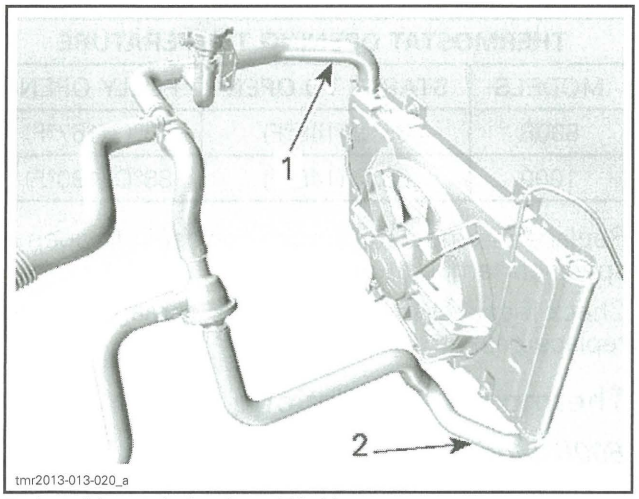

1. Install hose pincher from LH side
2. Install hose pincher from RH side

2. Lift front of vehicle to extend suspension.
3. Remove the following parts from the radiator:
   - Radiator inlet hose (LH upper)
   - Radiator outlet hose (RH lower)
   - Radiator mounting screws (2 at top of radiator).
4. Disconnect cooling fan electrical connector.
5. Remove cooling fan vent hose from frame.
6. Remove the 2 forward air filter housing mounting screws.

NOTE: This will make room for lifting the radiator off its lower mounting bushings.

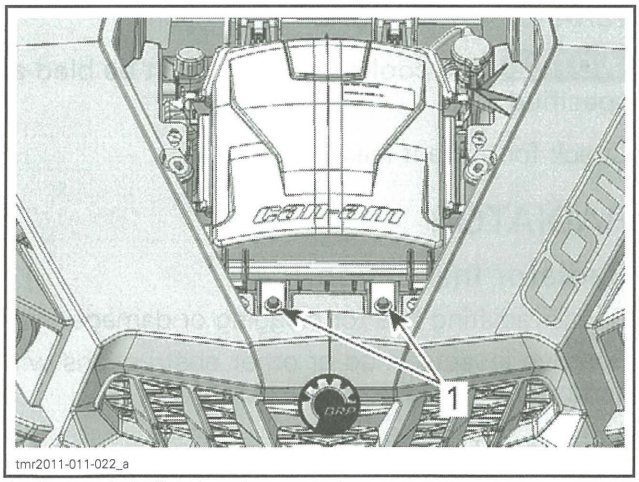

1. Forward air filter housing mounting screws to remove

Models Equipped with a Winch

7. Remove the winch, refer to *LIGHTS, GAUGE AND ACCESSORIES* subsection.

All Models

8. Lift radiator and tilt its lower end towards the front of the vehicle.

NOTE: Turning steering to LH stop or removing LH front wheel assembly provides greater access for radiator removal.

9. Carefully remove radiator through LH wheel well.

Radiator Installation

1. For installation, reverse the removal procedure however, pay attention to the following details.
2. Install the rubber bushings between bottom of radiator and radiator support.
3. Ensure the vent hose on the cooling fan motor is properly routed as illustrated.

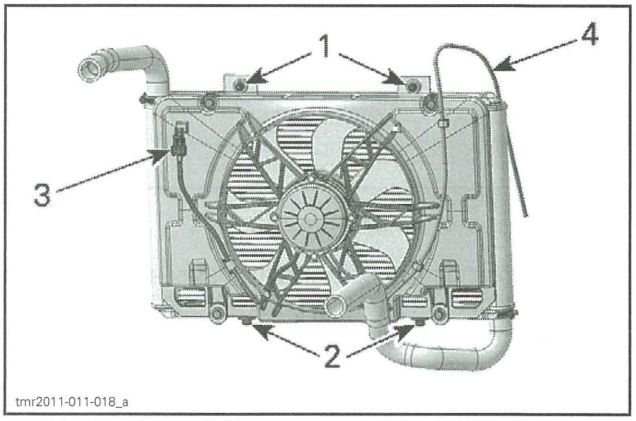

RADIATOR - REAR VIEW
1. Radiator mounting screws
2. Lower mounting bushings
3. Radiator fan electrical connector
4. Fan motor vent hose

NOTE: Cooling fan vent hose must pass over the top RH frame member, then be inserted down into the RH vertical bumper tube.

NOTICE If the vent hose on the cooling fan motor is not properly routed, the fan motor may be damaged due to improper venting.

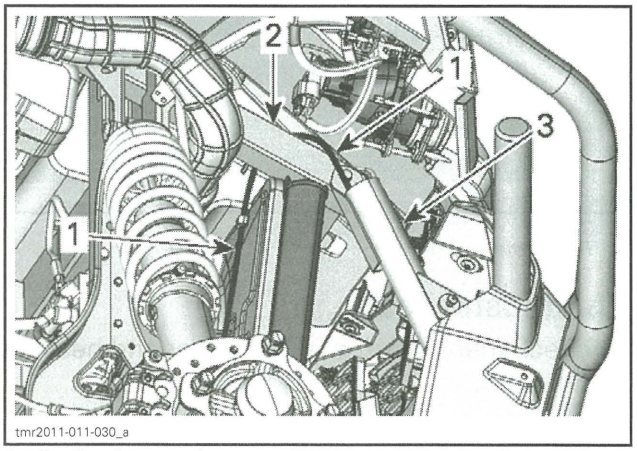

1. Cooling fan vent hose
2. RH top frame member
3. RH vertical bumper tube

4. Fill radiator with the recommended coolant. Refer to *PERIODIC MAINTENANCE PROCEDURES* subsection.
5. Bleed the cooling system, refer to *PERIODIC MAINTENANCE PROCEDURES* subsection.

NOTICE **The cooling system must be bled as specified.**

6. Check for coolant leaks from radiator and hoses.

COOLANT TEMPERATURE SENSOR (CTS)

Refer to *ELECTRONIC FUEL INJECTION (EFI)* subsection.

RADIATOR COOLING FAN RELAY (R1)

Relay Installation (Radiator Cooling Fan)

NOTE: Relay may be inverted by 180° at installation and it will work correctly. Ensure to align tabs of relay with terminals of fuse holder at installation.

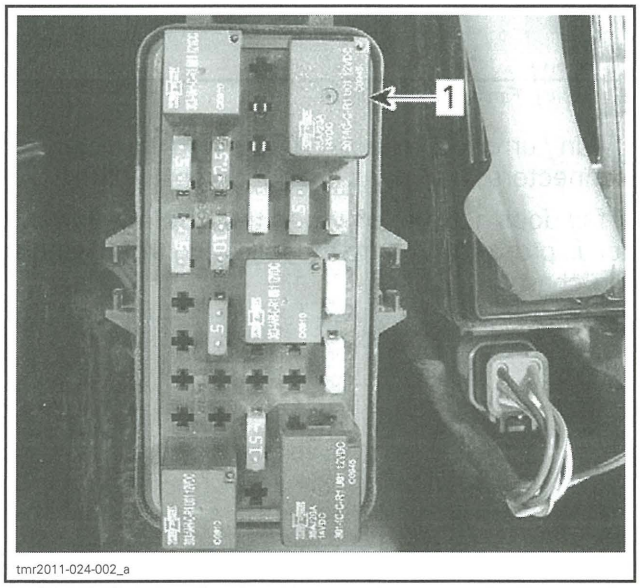

1. R1: Radiator cooling fan relay

Relay Operation Test (Radiator Cooling Fan)

The easiest way to check the relay is to remove it and temporarily substitute with the accessory relay. If the radiator cooling fan operates, replace the relay.

RADIATOR COOLING FAN

Radiator Cooling Fan Operation

The ECM controls the radiator cooling fan via the inputs of the coolant temperature sensor (CTS) and the manifold air pressure and temperature sensor (MAPTS). Refer to the following table.

ENGINE TEMPERATURE	INTAKE TEMPERATURE	COOLING FAN	CHECK ENGINE LIGHT	MESSAGE IN MULTIFUNCTION GAUGE	LIMP HOME MODE
—	88°C (190°F)	Turns ON	—	—	—
—	85°C (185°F)	Turns OFF	—	—	—
96°C (205°F)	—	Turns ON	—	—	—
92°C (198°F)	—	Turn OFF	—	—	—
115°C (239°F)	—	ON	Turns ON	- Check engine - Hi Temp	—
118°C (244°F)	—	ON	Flashes	Limp Home	Engine RPM limited to 4000

Radiator Cooling Fan Fuse Location

The fuse is located in the fuse box underneath the dashboard on the driver's side.

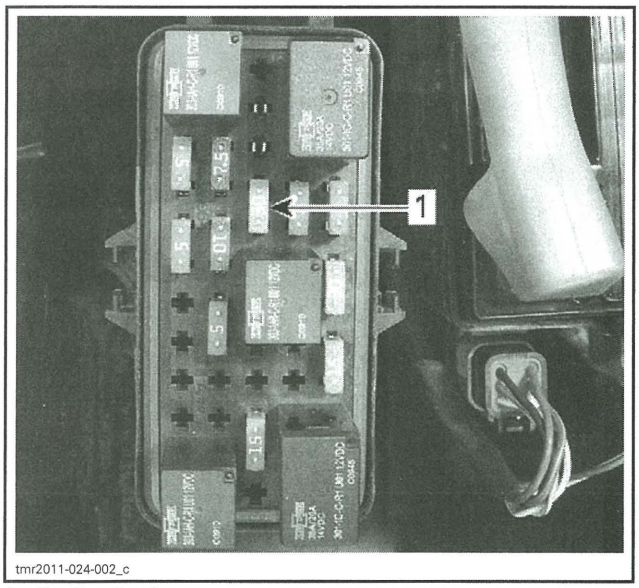

1. Cooling fan fuse

Radiator Cooling Fan Test

1. Connect the vehicle to B.U.D.S., refer to *COMMUNICATION TOOLS AND B.U.D.S.* for procedure and connector location.
2. In B.U.D.S. software, select the following:
   - **Read Data** button
   - **Activation** tab
   - **ECM** tab
   - **Cooling Fan** button.

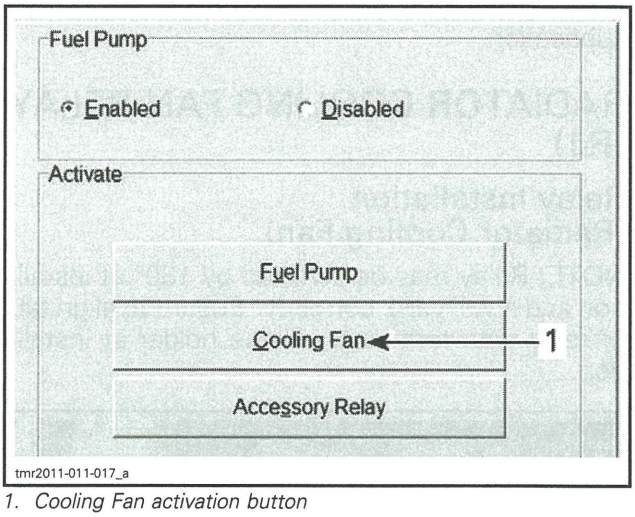

1. Cooling Fan activation button

If fan turns on, check CTS, wiring harness and connectors. If all parts are good, replace the ECM.

If fan does not turn on when the **Cooling Fan** button is pressed, refer to the following troubleshooting chart.

COOLING FAN TROUBLESHOOTING CHART		
Is fan working?	YES →	Everything is OK
NO ↓		
Check "Relay driver" fuse (5A) and fan fuse (30A). Is fuse burnt?	YES →	Replace fuse Is fan working?
NO ↓		
Bypass fan relay R1		
↓		
Fan turns?	YES →	Replace relay Is fan working?
NO ↓		
Apply 12 Vdc to fan connector		
↓		
Fan turns?	NO →	Replace fan Is fan working?
YES ↓		
Check CTS		
↓		
CTS works?	NO →	Replace CTS Is fan working?
YES ↓		
Check wiring harness and connectors		
↓		
Harness and connectors good?	NO →	Repair or replace defective part(s)
YES ↓		
Try a new ECM	→	Is fan working?

Radiator Cooling Fan Removal

1. Disconnect fan motor electrical connector.
2. Remove fan motor vent tube from vehicle frame.
3. Remove 4 fan retaining screws.
4. Remove the radiator fan.

Radiator Cooling Fan Installation

For the installation, reverse the removal procedure.

WATER PUMP HOUSING

Water Pump Housing Location

It is located on the engine MAG side (RH side of engine).

Water Pump Housing Access

Remove fuel tank. Refer to *FUEL SYSTEM* subsection.

Water Pump Housing Removal

⚠ WARNING

To avoid potential burns, do not remove the radiator cap or loosen the coolant drain plug if the engine is hot.

Drain cooling system. Refer to *PERIODIC MAINTENANCE PROCEDURES* subsection.

Remove radiator outlet hose from water pump housing.

Remove screws retaining water pump housing.

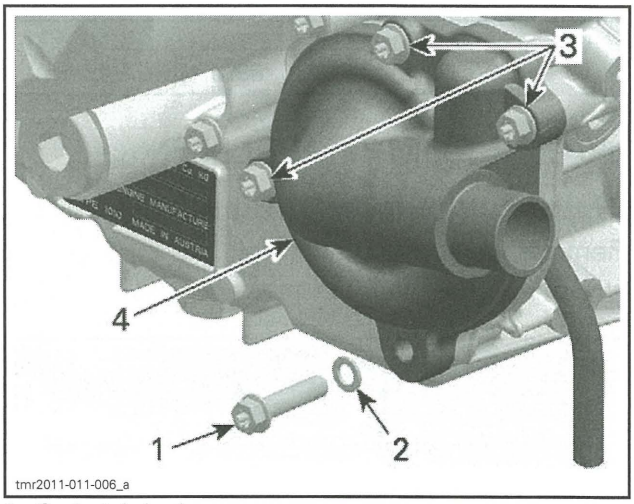

1. *Coolant drain plug*
2. *Sealing ring*
3. *Screws*
4. *Water pump housing*

Pull water pump housing to remove it.

Water Pump Housing Inspection

Check if gasket is brittle, hard or damaged and replace as necessary.

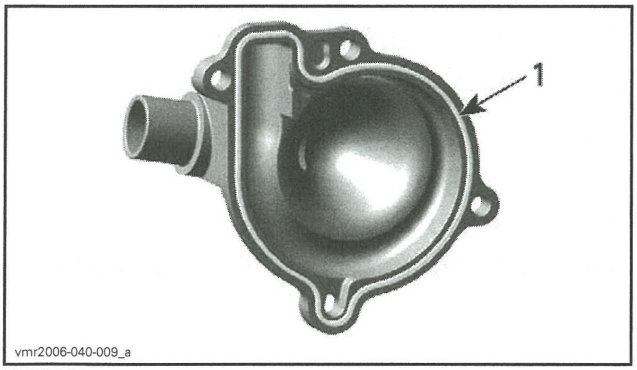

TYPICAL
1. Gasket

Water Pump Housing Installation

The installation is the opposite of the removal procedure.

NOTICE To prevent leaking, take care that the gasket is exactly in groove when you reinstall the water pump housing.

Tighten screws of water pump housing in a criss cross sequence to specification.

TIGHTENING TORQUE	
Water pump housing screws	10 N•m ± 1 N•m (89 lbf•**in** ± 9 lbf•**in**)

WATER PUMP IMPELLER

Water Pump Impeller Removal

Remove water pump housing.

Unscrew impeller.

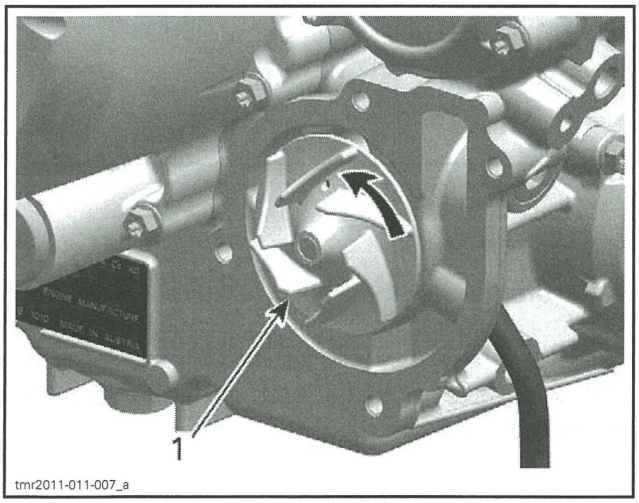

1. Turn counterclockwise to unscrew

NOTICE Water pump shaft and impeller have right-hand threads. Remove by turning counterclockwise and install by turning clockwise.

Water Pump Impeller Inspection

Check impeller for cracks or other damage. Replace impeller if damaged.

Water Pump Impeller Installation

The installation is the opposite of the removal procedure.

NOTICE Be careful not to damage impeller fins during installation.

WATER PUMP SHAFT AND SEALS

Use these guidelines to service these parts.

DEFECTIVE PART	ACTION
Rotary seal	Replace: - Rotary seal - Oil seal (assembled engine)
Oil seal	Replace: - Rotary seal - Oil seal (assembled engine)
Water pump shaft	Replace: - Water pump shaft assembly (including rotary seal) - Oil seal (engine disassembled)

NOTICE Rotary seal must be replaced if water pump shaft is to be replaced.

Water Pump Seals Replacement (Assembled Engine)

NOTE: Read and thoroughly understand the entire procedure before starting it.

Seals Removal

Remove water pump housing, refer to *WATER PUMP HOUSING* in this subsection.

1. Remove the following parts, see procedure in this subsection.
   - *WATER PUMP HOUSING*
   - *WATER PUMP IMPELLER.*
2. Carefully pry out inner part of the rotary seal using 2 screwdrivers.

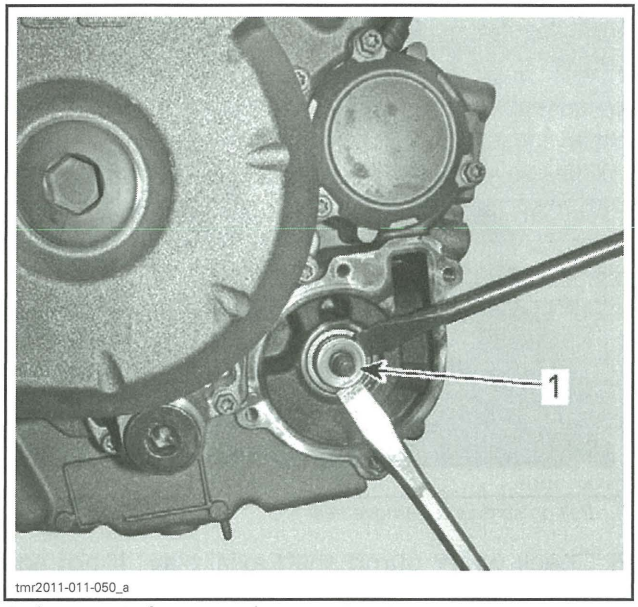

1. Inner part of rotary seal

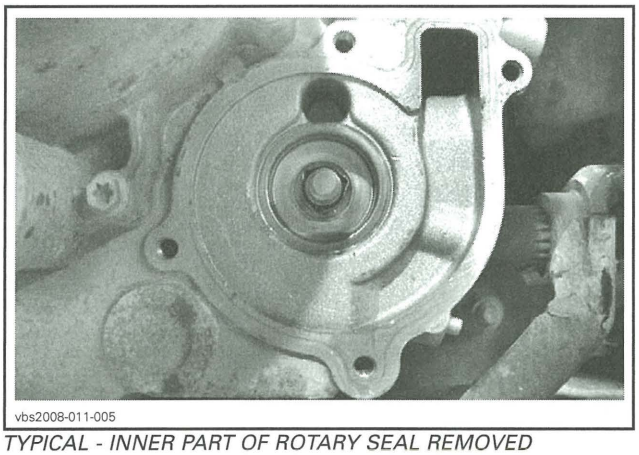

TYPICAL - INNER PART OF ROTARY SEAL REMOVED

3. Carefully bend down the outer part of rotary seal lip using a small chisel.

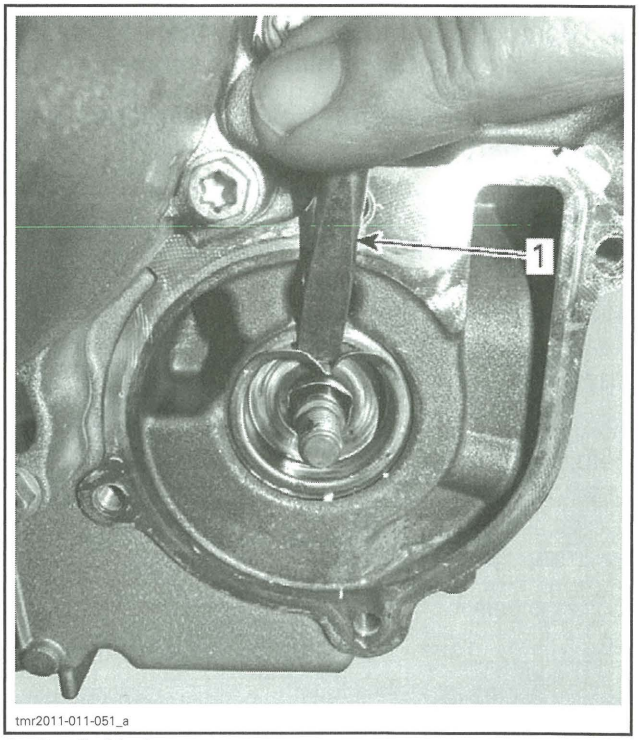

1. Small chisel

4. Use 2 screwdrivers and carefully remove the outer part of the rotary seal.

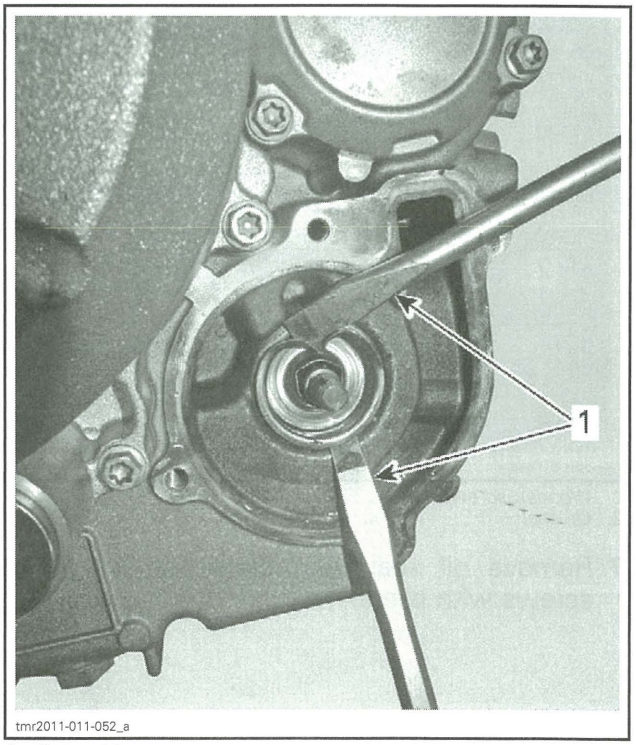

1. Screwdrivers

NOTICE Be careful not to damage the crankcase while removing outer part of the rotary seal.

5. Thoroughly remove carefully sealing residue and burr of rotary seal using a scraper.

NOTICE Be careful not to damage water pump shaft.

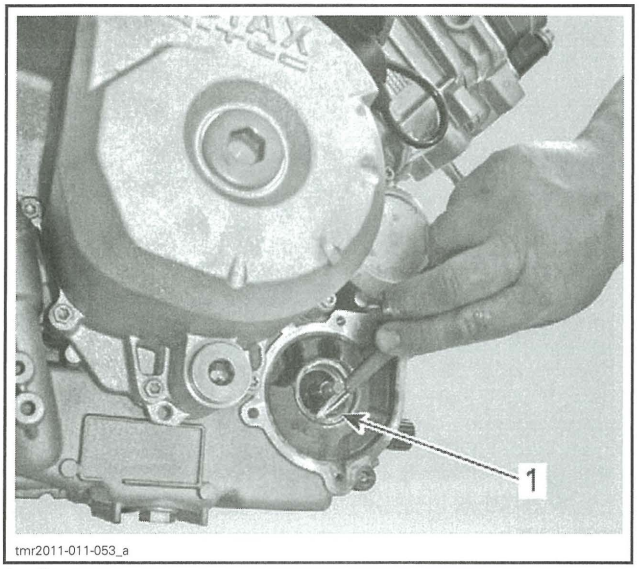

1. Scraper

6. Install 2 wooden screws in the seal.

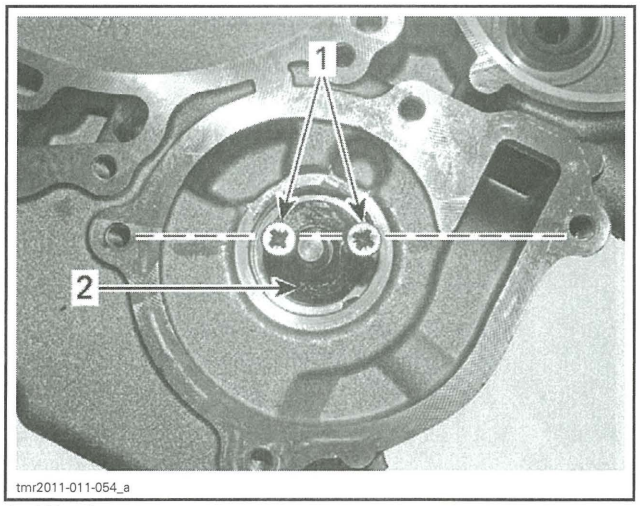

1. Wooden screws
2. Oil seal

7. Remove oil seal from crankcase by pulling screws with pliers.

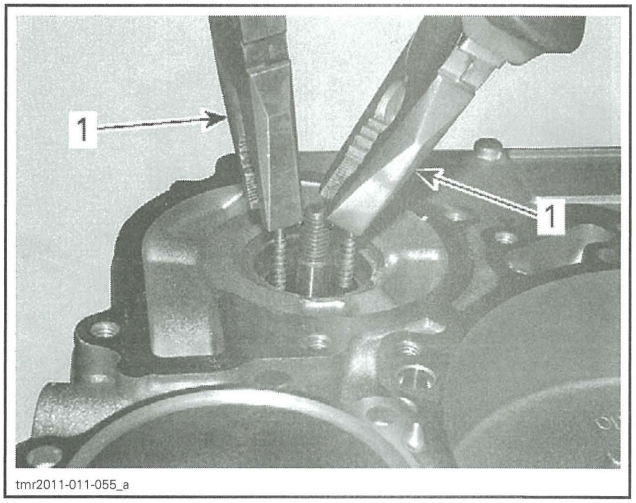

1. Pull on screws to remove seal

8. Check water pump shaft axial play. If not adequate, engine must be disassembled to replace the water pump shaft.
9. Clean oil seal seat.

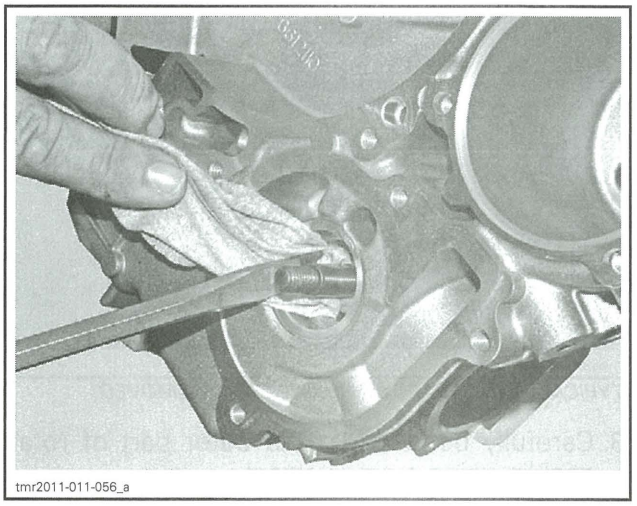

Seals Installation

1. Apply engine oil on water pump shaft.
2. Apply grease to the lips of the oil seal.
3. Carefully install the oil seal over the water pump shaft.
4. Push the oil seal into the water pump cavity.

REQUIRED TOOL
17 mm (11/16 in) deep socket

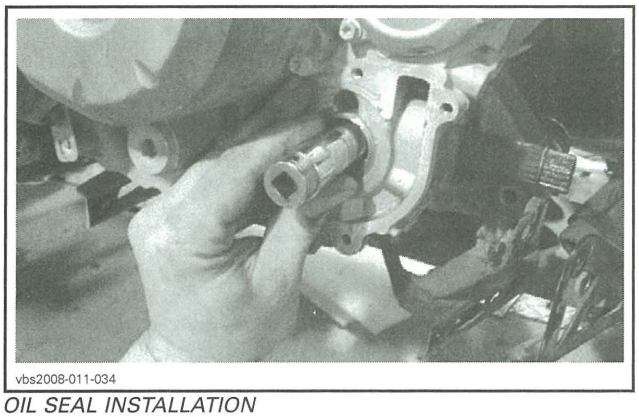

OIL SEAL INSTALLATION

5. Ensure that the oil seal is properly seated in water pump cavity.

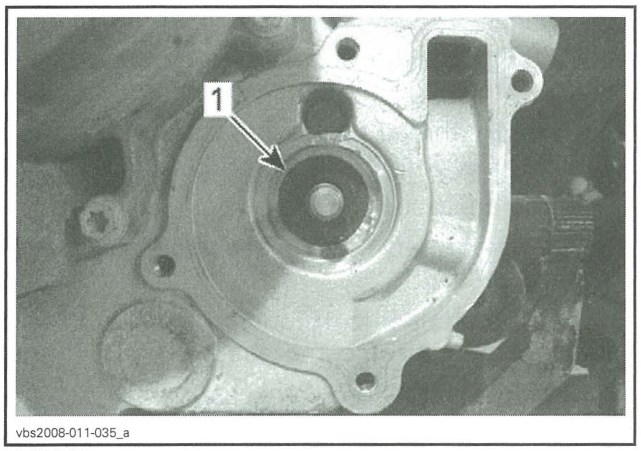

TYPICAL
1. *Oil seal properly seated*

6. Apply engine oil on water pump shaft.
7. Place rotary seal onto water pump shaft and pull out water pump shaft by hand.

NOTICE **Do not install the rotary seal completely into the crankcase to prevent the water pump shaft plastic gear from breaking. Push it partially in, then pull the shaft.**

8. Place a robust M8 flat washer (P/N 420 227 935) onto water pump shaft.
9. Install a M8 x 1.25 nut onto water pump shaft by hand.
10. Then thread nut **1-1/2 turns** to pull the shaft into rotary seal.

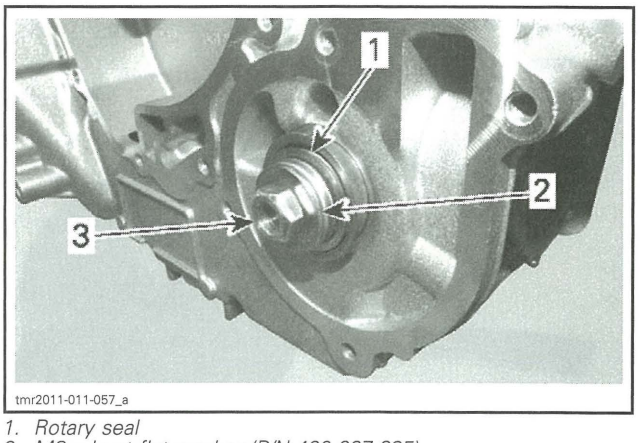

1. *Rotary seal*
2. *M8 robust flat washer (P/N 420 227 935)*
3. *M8 x 1.25 nut (P/N 233 281 414)*

11. Remove M8 nut.

NOTE: The robust M8 flat washer remains on water pump shaft.

12. Install rotary seal installation tools on crankcase as follows.

REQUIRED TOOLS
ROTARY SEAL PUSHER PLATE (P/N 529 036 130)
4x M6 x 85 screws (P/N 420 440 347)
4x tubes 70 mm (2.75 in)
SEAL PUSHER (P/N 529 035 766)

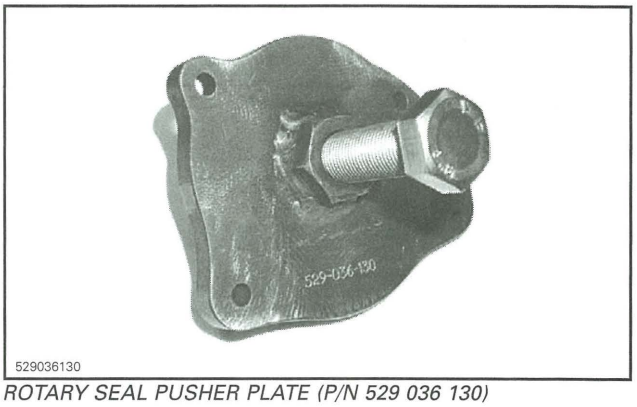

ROTARY SEAL PUSHER PLATE (P/N 529 036 130)

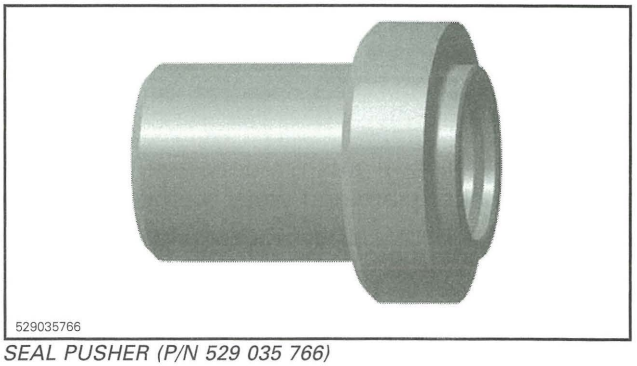

SEAL PUSHER (P/N 529 035 766)

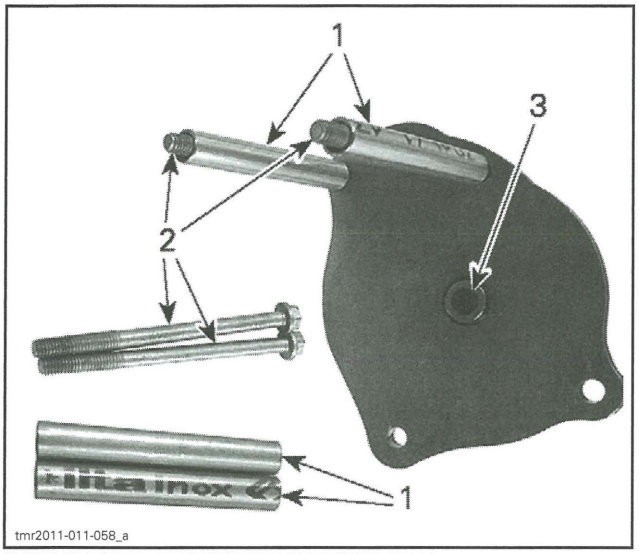

ROTARY SEAL PUSHER PLATE ASSEMBLY
1. *4 x tubes (70 mm (2.75 in) length)*
2. *4 x screws M6 x 85*
3. *Plane surface on pusher bolt*

NOTE: Make sure pusher bolt has a plane surface.

12.1 Apply a little grease at the end of tool pusher bolt.

12.2 Ensure that pusher bolt is completely unscrewed.

12.3 Install rotary seal pusher plate on crankcase by tightening M6 screws.

NOTICE **Do not use pneumatic or electric tools for tightening screws.**

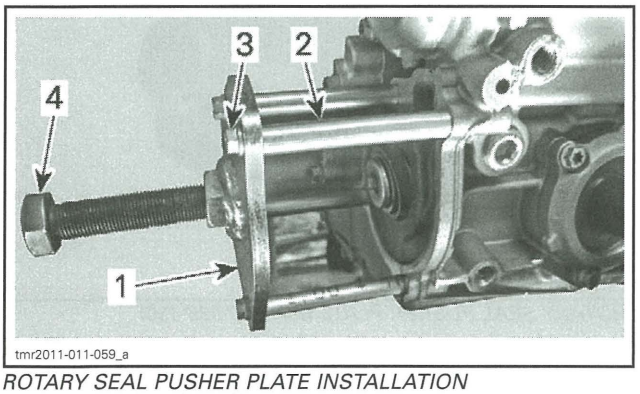

ROTARY SEAL PUSHER PLATE INSTALLATION
1. *Rotary seal pusher plate*
2. *Tube (70 mm (2.75 in) length)*
3. *M6 x 85 screw*
4. *Pusher bolt*

12.4 Install seal pusher between rotary seal pusher plate and water pump shaft.

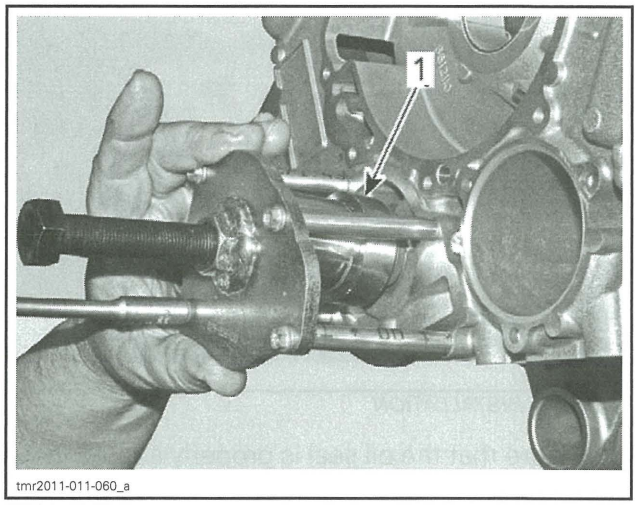

SEAL PUSHER INSTALLATION
1. *Seal pusher aligned with pusher bolt*

12.5 Tighten the pusher bolt by hand until it stops against the seal pusher.

13. Carefully thread the pusher bolt **1-1/2 turns**.
14. Ensure that the rotary seal is going straight into crankcase.
15. Remove rotary seal installation tools from crankcase.

Repeat the steps 9 to 15 until rotary seal is completely seated in the crankcase.

16. Remove tools from crankcase.

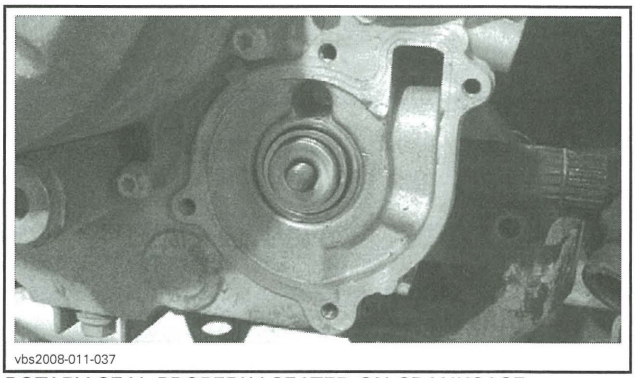

ROTARY SEAL PROPERLY SEATED ON CRANKCASE

17. Carry out the final adjustment of the water pump shaft as follows.

17.1 Install M8 x 1.25 nut (P/N 233 281 414) onto water pump shaft.

17.2 Carefully thread M8 nut until the rotary seal is flush with the end of water pump shaft threads.

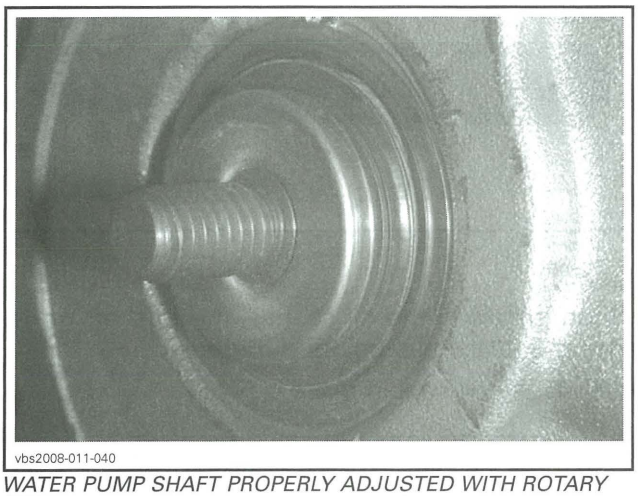
vbs2008-011-040

WATER PUMP SHAFT PROPERLY ADJUSTED WITH ROTARY SEAL

NOTICE The water pump shaft must be properly adjusted with rotary seal. The water pump shaft must move freely while pushing it toward the crankcase.

18. Install the following parts, see procedure in this subsection.
    - *WATER PUMP IMPELLER*
    - *WATER PUMP HOUSING*.
19. Refill and bleed cooling system. Refer to *PERIODIC MAINTENANCE PROCEDURES* subsection.
20. Check cooling system for leaks.

Water Pump Shaft and Seals Replacement (Disassembled Engine)

Water Pump Shaft and Seals Removal

1. Remove the following parts:
    - *WATER PUMP HOUSING*
    - *WATER PUMP IMPELLER*
    - *WATER PUMP GEARS*.
2. Push out water pump shaft with inner portion of rotary seal from inside of crankcase MAG side.

REQUIRED TOOL
Soft hammer

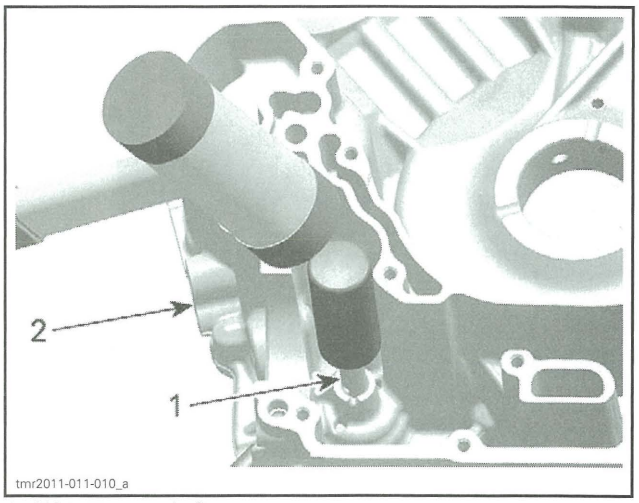

tmr2011-011-010_a

1. *Water pump shaft*
2. *Crankcase MAG side*

3. Remove outer part of rotary seal.

REQUIRED TOOL	
BLIND HOLE PULLER KIT (P/N 529 036 056)	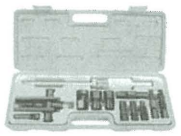

4. Install expander snugly against outer part of rotary seal and pull seal out.

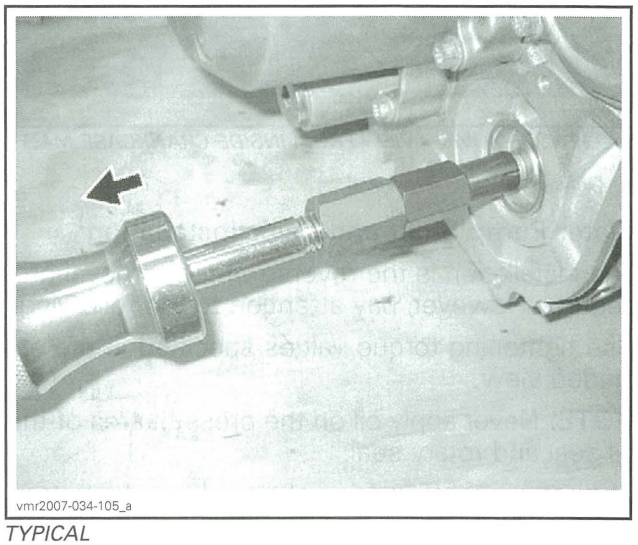
vmr2007-034-105_a

TYPICAL

5. Remove oil seal from inside of crankcase MAG side using a pusher tool.

NOTICE Be careful not to damage the rotary seal surface in crankcase.

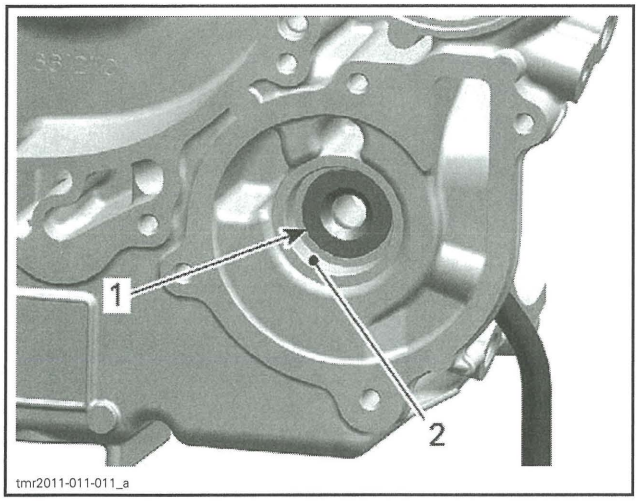

1. Oil seal
2. Machined surface for rotary seal

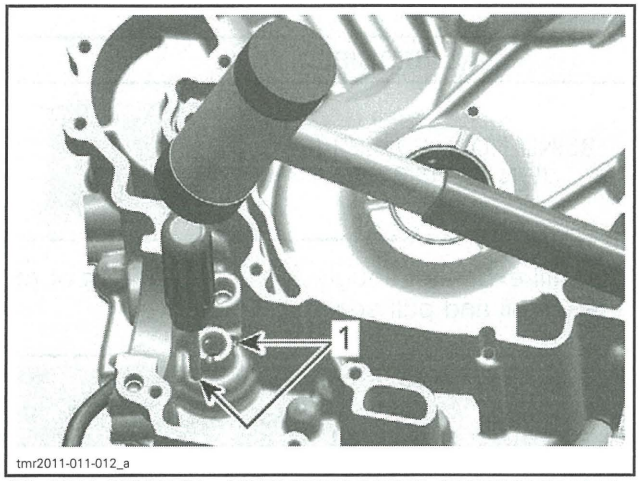

OIL SEAL REMOVAL - VIEW FROM INSIDE CRANKCASE MAG SIDE
1. Orifices for oil seal removal

Water Pump Shaft and Seals Installation

The installation is the reverse of the removal procedure. However, pay attention to the following.

Use tightening torque values specified in the exploded view.

NOTE: Never apply oil on the press fit area of the oil seal and rotary seal.

Clean rotary seal surface of any old sealant.

Install oil seal.

REQUIRED TOOL
OIL SEAL PUSHER (P/N 529 035 757)
HANDLE (P/N 420 877 650)

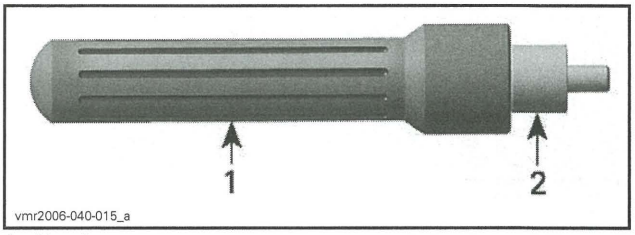

1. Handle
2. Pusher

When installing the oil seal on the pusher, make sure the sealing lip points outwards.

Push NEW oil seal in place.

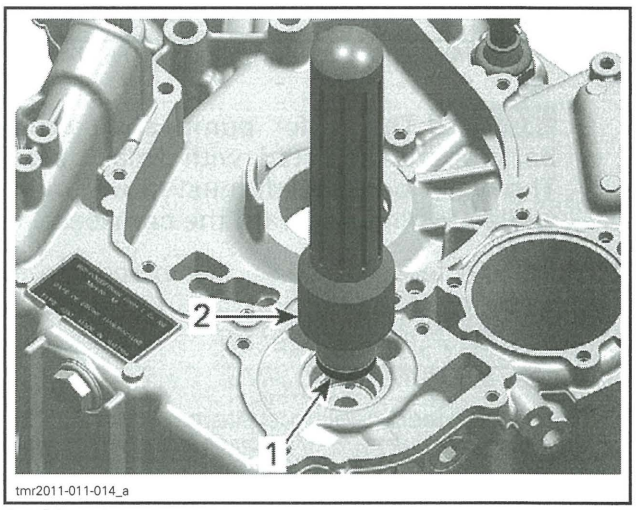

1. Oil seal
2. Installer handle with oil seal pusher

Apply DOW CORNING 111 (P/N 413 707 000) on sealing lip of the oil seal.

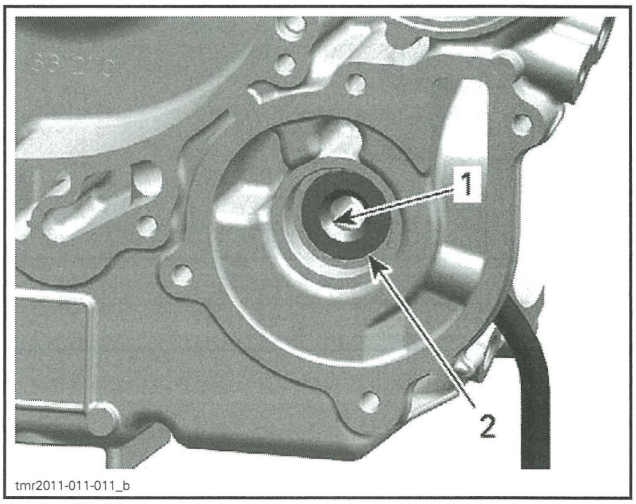

1. Sealing lip
2. Oil seal properly installed

Apply engine oil on the water pump shaft and intermediate shaft.

Slide NEW water pump shaft assembly into crankcase.

REQUIRED TOOL	
SEAL PUSHER (P/N 529 035 766)	

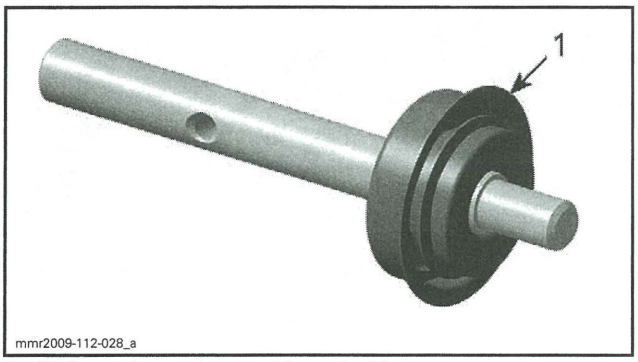

1. Surface where rotary seal is pushed by tool

Water Pump Shaft Assembly

NOTICE Never use a hammer for rotary seal installation. Only use a press to avoid damaging the ceramic component.

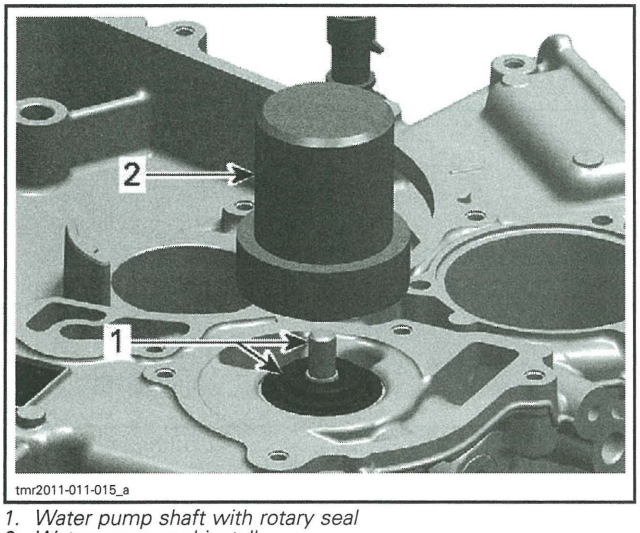

1. Water pump shaft with rotary seal
2. Water pump seal installer

NOTICE After installation, water pump shaft with rotary seal must rotate freely.

WATER PUMP GEARS

Water Pump Gears Identification

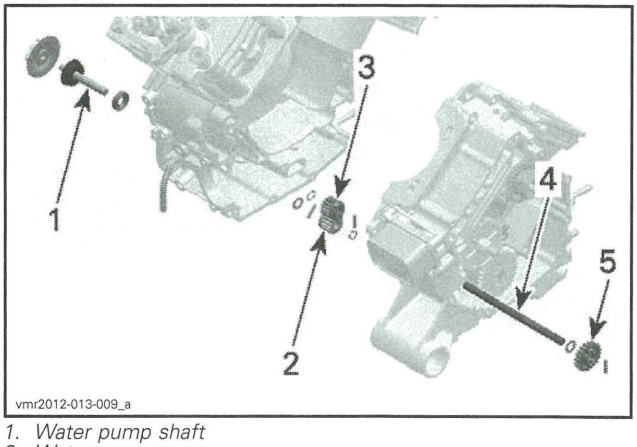

1. Water pump shaft
2. Water pump gear
3. Water pump **intermediate drive** *gear*
4. Water pump **intermediate** *shaft*
5. Water pump **drive** *gear (See BOTTOM END subsection)*

Water Pump Gears Inspection

Water Pump Gear

Inspect water pump gear for wear and damage on the snap mechanism to the needle pin. Replace if damaged.

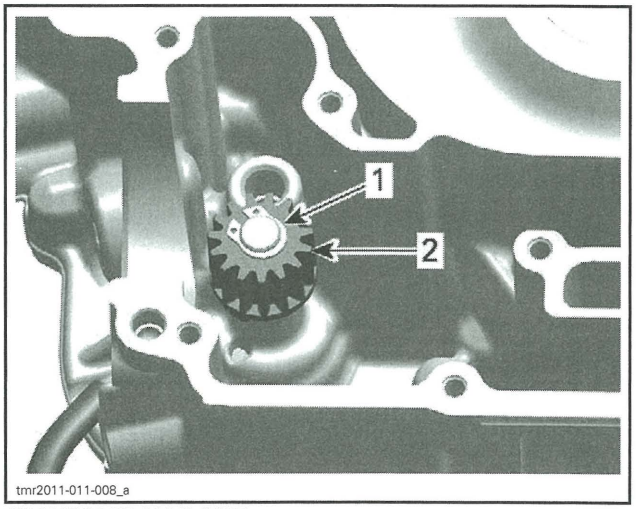

CRANKCASE MAG SIDE
1. Circlip
2. Water pump gear

Water Pump Intermediate Drive Gear

Check water pump intermediate drive gear for wear or broken teeth. Replace if damaged.

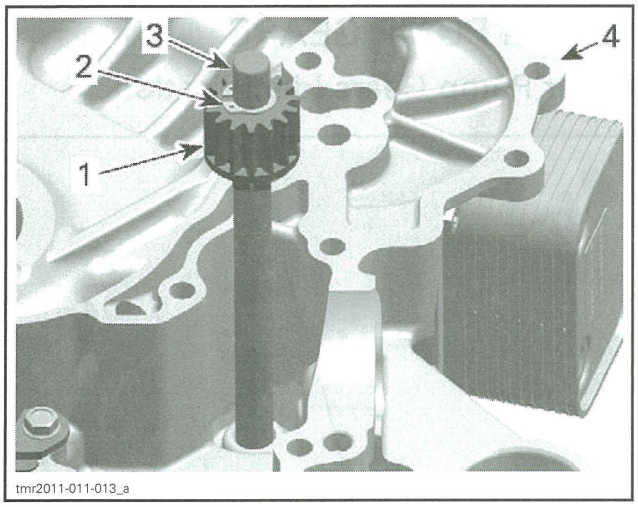

CRANKCASE PTO SIDE
1. *Water pump intermediate drive gear*
2. *Circlip*
3. *Water pump intermediate shaft*
4. *Crankcase PTO side*

Water Pump Drive Gear

See *BOTTOM END* subsection.

Water Pump Gears Removal

Water Pump Gear

1. Remove circlip retaining water pump gear and discard it.

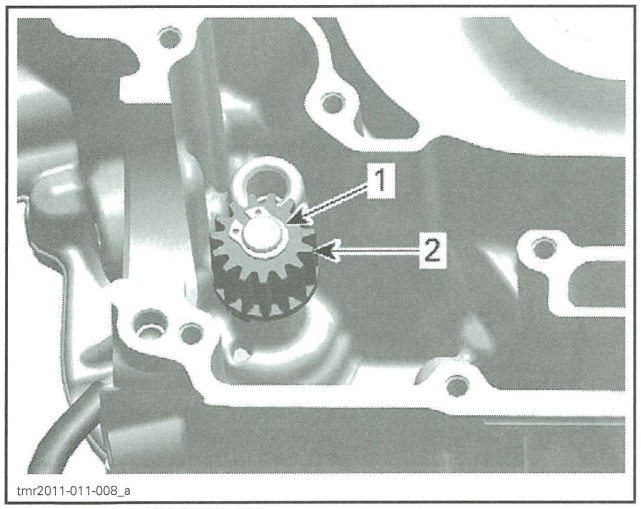

CRANKCASE MAG SIDE
1. *Circlip*
2. *Water pump gear*

2. Remove the following parts:
   - Water pump gear
   - Needle pin
   - Thrust washer.

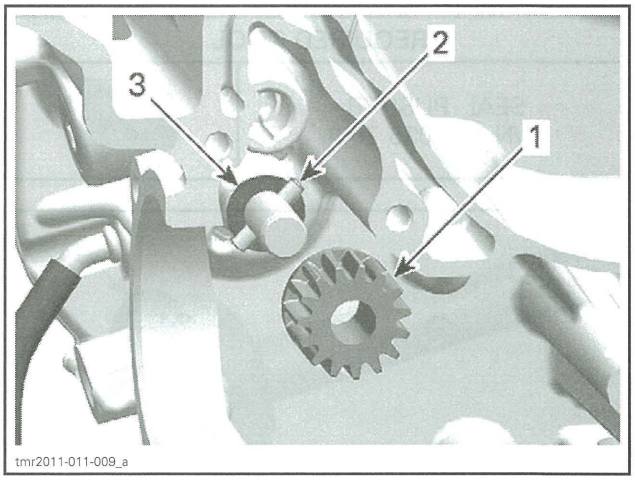

CRANKCASE MAG SIDE
1. *Water pump gear*
2. *Needle pin*
3. *Thrust washer*

Water Pump Intermediate Drive Gear

1. Remove circlip retaining water pump intermediate drive gear and discard it.

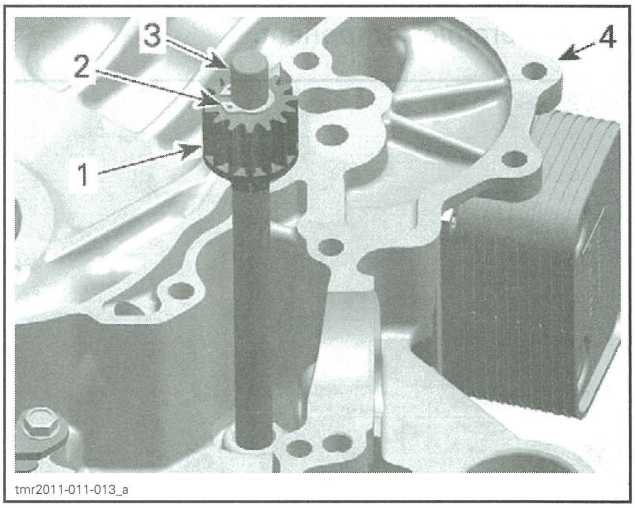

CRANKCASE PTO SIDE
1. *Water pump intermediate drive gear*
2. *Circlip*
3. *Water pump intermediate shaft*
4. *Crankcase PTO side*

2. Remove the following parts:
   - Water pump intermediate drive gear
   - Needle pin.

Water Pump Drive Gear

See *BOTTOM END* subsection.

Water Pump Gears Installation

Water Pump Gear

Install the following parts on water pump shaft.
- Thrust washer

– Needle pin
– Water pump gear.

NOTICE A missing thrust washer will cause a leaking rotary seal.

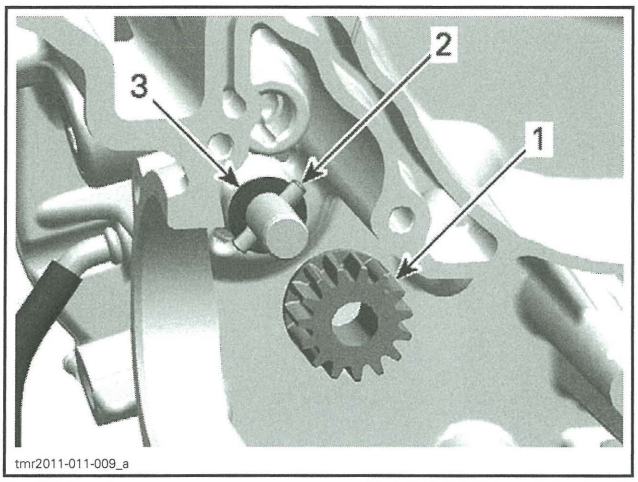

1. Water pump gear
2. Needle pin
3. Thrust washer

NOTE: Ensure water pump gear snaps properly onto needle pin.

Install NEW circlip to retain water pump gear.

NOTICE Never use the circlip a second time. Always install a NEW one.

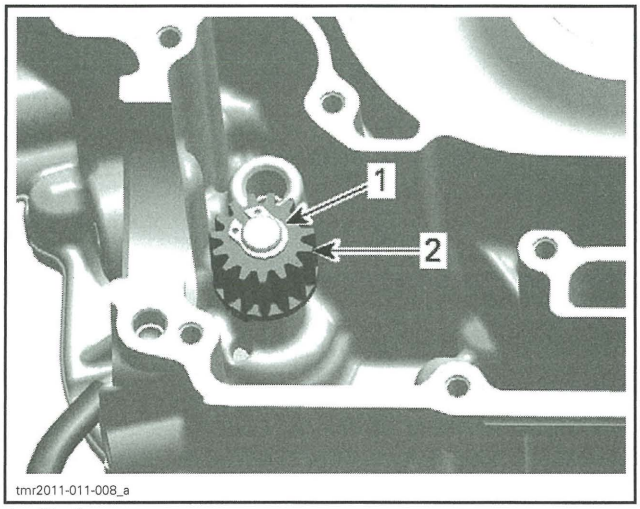

1. Circlip
2. Water pump gear

Water Pump Intermediate Drive Gear

Install the following parts on water pump intermediate shaft.
– Needle pin
– Water pump intermediate drive gear.

Install NEW circlip to retain water pump intermediate drive gear.

NOTICE Never use the circlip a second time. Always install a NEW one.

Water Pump Drive Gear

See *BOTTOM END* subsection.

MAGNETO SYSTEM

SERVICE TOOLS

Description	Part Number	Page
BACK PROBE TEST WIRES	529 036 063	87
CRANKSHAFT LOCKING BOLT	529 035 617	88
CRANKSHAFT PROTECTOR	529 036 034	88
FLUKE 115 MULTIMETER	529 035 868	86–87
MAGNETO PULLER	529 035 748	88

SERVICE PRODUCTS

Description	Part Number	Page
DREI BOND SEALING COMPOUND	420 297 906	85
LOCTITE 243 (BLUE)	293 800 060	88
LOCTITE 648 (GREEN)	413 711 400	89–90
LOCTITE 767 (ANTISEIZE LUBRICANT)	293 800 070	91
LOCTITE CHISEL (GASKET REMOVER)	413 708 500	85
PULLEY FLANGE CLEANER	413 711 809	89

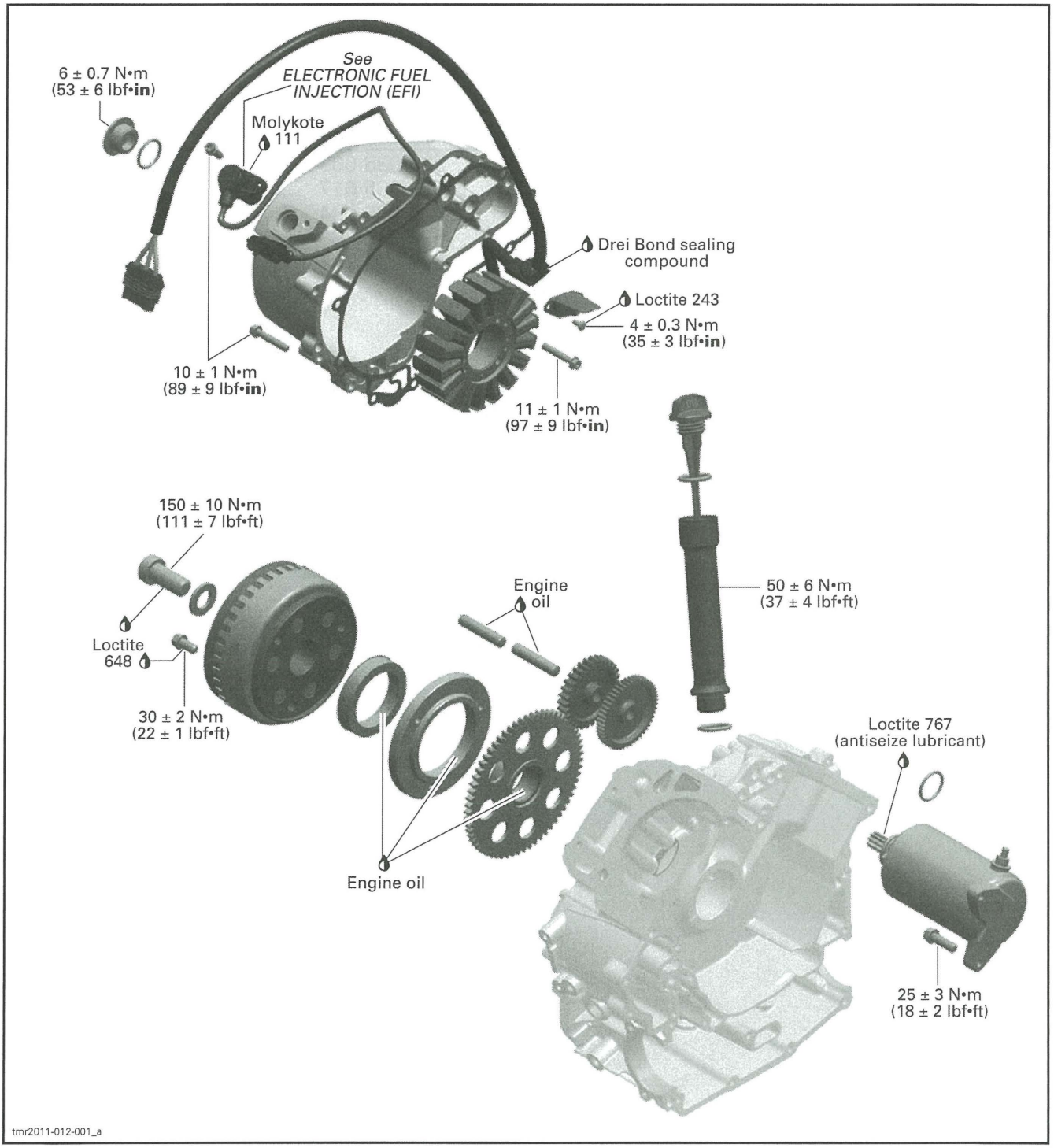
6 ± 0.7 N•m
(53 ± 6 lbf•in)
See
ELECTRONIC FUEL
INJECTION (EFI)
Molykote
111
Drei Bond sealing
compound
Loctite 243
4 ± 0.3 N•m
(35 ± 3 lbf•in)
10 ± 1 N•m
(89 ± 9 lbf•in)
11 ± 1 N•m
(97 ± 9 lbf•in)
150 ± 10 N•m
(111 ± 7 lbf•ft)
Loctite
648
30 ± 2 N•m
(22 ± 1 lbf•ft)
Engine
oil
50 ± 6 N•m
(37 ± 4 lbf•ft)
Loctite 767
(antiseize lubricant)
Engine oil
25 ± 3 N•m
(18 ± 2 lbf•ft)
tmr2011-012-001_a

PROCEDURES

MAGNETO COVER

Magneto Cover Access

Remove fuel tank, refer to *FUEL TANK AND FUEL PUMP*.

Magneto Cover Removal

Drain engine oil (refer to *PERIODIC MAINTENANCE PROCEDURES* subsection).

Remove crankshaft position sensor (CPS) and cut tie raps.

Remove dipstick and oil level tube with O-rings.

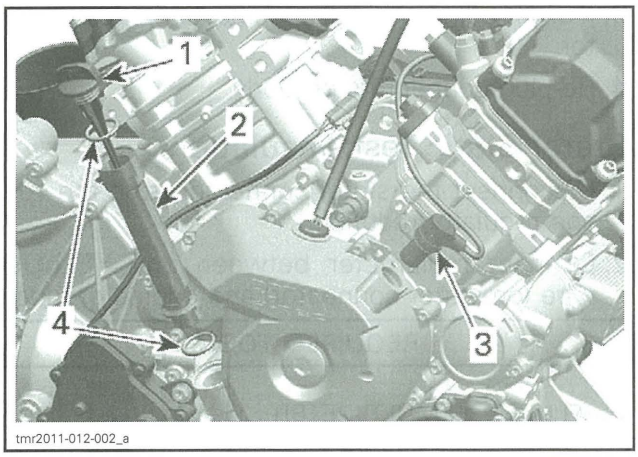

1. *Dipstick*
2. *Oil level tube*
3. *Crank position sensor (CPS)*
4. *O-rings*

Remove magneto cover retaining screws.

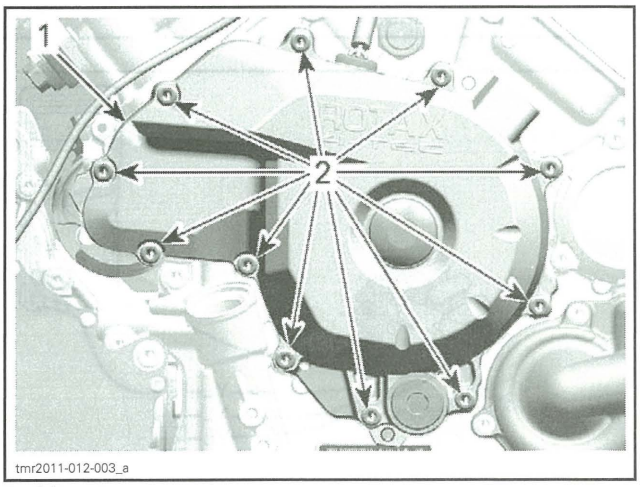

1. *Magneto cover*
2. *Retaining screws*

Pull out magneto cover.

NOTE: If required, remove stator and harness from magneto cover.

Magneto Cover Inspection and Cleaning

Check magneto cover for cracks or other damage. Replace if necessary.

NOTE: Clean all metal components in a non-ferrous metal cleaner. Use LOCTITE CHISEL (GASKET REMOVER) (P/N 413 708 500), or suitable equivalent.

⚠ WARNING

Wear safety glasses and work in a well ventilated area when working with strong chemical products. Also wear suitable non-absorbent gloves to protect your hands.

Magneto Cover Installation

For installation, reverse the removal procedure. However, pay attention to the following.

NOTE: Install a NEW magneto cover gasket.

Apply DREI BOND SEALING COMPOUND (P/N 420 297 906) on stator cable grommet as shown in next illustration.

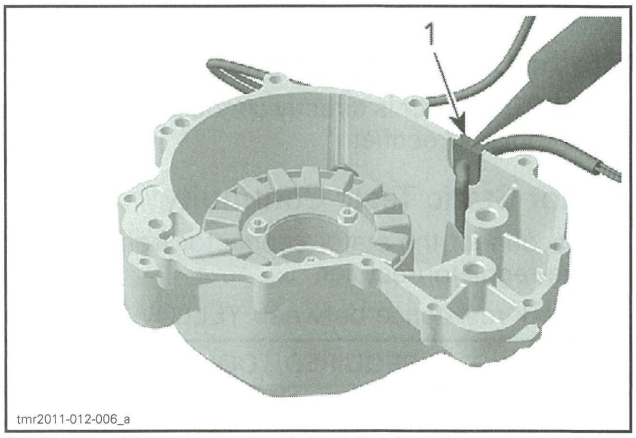

1. *Stator cable grommet (apply Drei Bond sealing compound)*

Tighten screws using the following sequence.

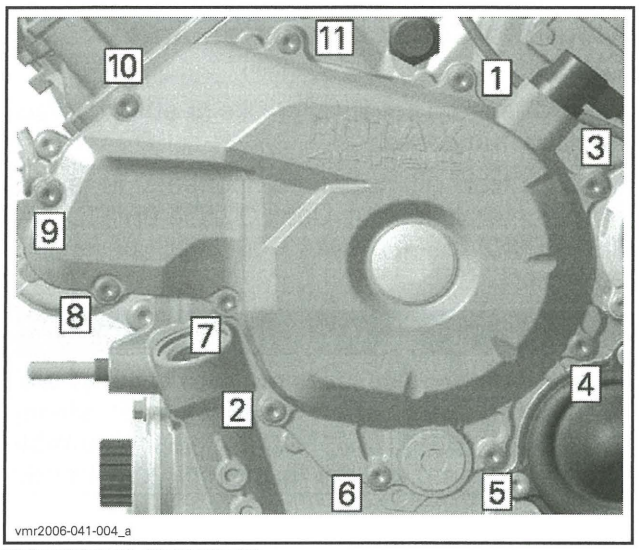

TIGHTENING SEQUENCE

MAGNETO COVER SCREWS	
Tightening torque	10 N•m ± 1 N•m (89 lbf•**in** ± 9 lbf•**in**)

Refill engine with recommended oil.

STATOR

Stator Connector Access

NOTE: The stator is directly connected to the voltage regulator/rectifier.

Stator Static Test: Continuity

1. Disconnect the stator connector from the voltage regulator/rectifier.
2. Check resistance between YELLOW wires.

REQUIRED TOOL	
FLUKE 115 MULTIMETER (P/N 529 035 868)	

TERMINAL	RESISTANCE @ 20°C (68°F)
1 and 2	0.15 - 0.30 Ω
1 and 3	
2 and 3	

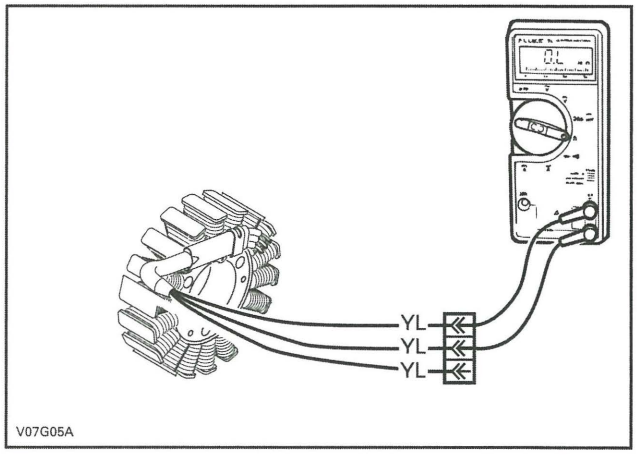

TYPICAL

3. If any reading is out of specification, replace stator.
4. Re-plug connectors properly.

Stator Static Test: Insulation

1. Disconnect the stator connector from the voltage regulator/rectifier.
2. Connect multimeter between any YELLOW wire (on stator connector) and engine ground.

REQUIRED TOOL	
FLUKE 115 MULTIMETER (P/N 529 035 868)	

TEST PROBES	RESISTANCE @ 20°C (68°F)
Any YELLOW wire and engine ground	Infinite (open circuit)

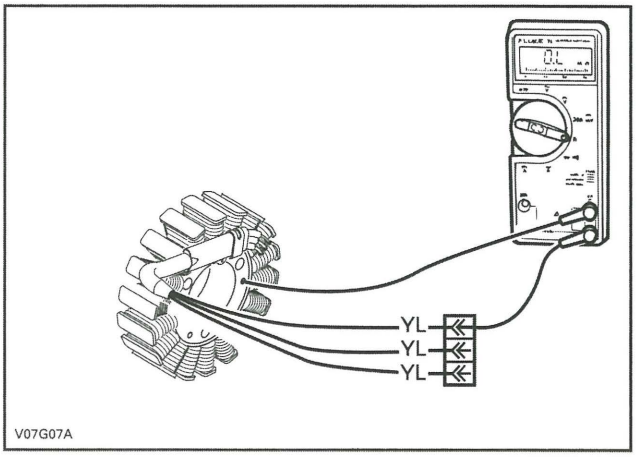

TYPICAL

3. If there is a resistance or continuity, the stator coils and/or the wiring is shorted to ground and needs to be repaired or replaced.
4. Re-plug connectors properly.

Stator Dynamic Test: AC Voltage Output

1. Disconnect stator connector at voltage regulator/rectifier.
2. Start engine.
3. Check AC voltage output as follow:

REQUIRED TOOL	
BACK PROBE TEST WIRES (P/N 529 036 063)	
FLUKE 115 MULTIMETER (P/N 529 035 868)	

4. Read voltage as per following table.

TEST ENGINE SPEED	TERMINAL	VOLTAGE
4000 RPM	1 and 2	15 Vac MINIMUM
	1 and 3	
	2 and 3	

5. If voltage is lower than specification, replace stator.
6. Re-plug connectors properly.

Stator Removal

Remove *MAGNETO COVER*. See procedure in this subsection.

Remove screws securing the wire holding strip.

Remove stator retaining screws then the stator.

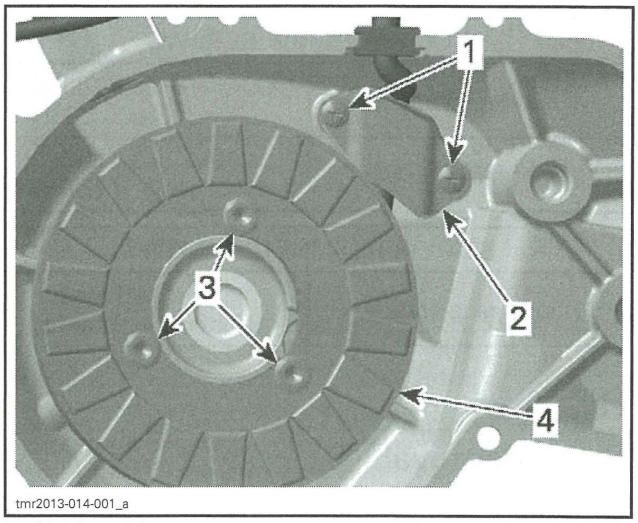

1. Holding strip screws
2. Wire holding strip
3. Stator retaining screws
4. Stator

Stator Inspection

Check stator windings and insulation for cracks or other damages. If damaged replace it.

Check if stator wires are brittle, hard or otherwise damaged.

Stator Installation

For installation, reverse the removal procedure. However, pay attention to the following.

NOTICE When installing the stator take care to route wires properly and install retaining strip.

NOTE: There is only one position for the stator (notch in the magneto housing cover).

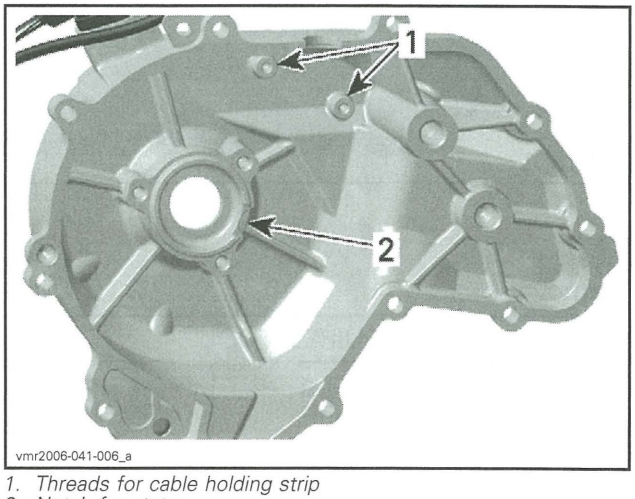

1. Threads for cable holding strip
2. Notch for stator

HOLDING STRIP SCREWS	
Service product	LOCTITE 243 (BLUE) (P/N 293 800 060)
Tightening torque	4 N•m ± 0.5 N•m (35 lbf•**in** ± 4 lbf•**in**)

STATOR RETAINING SCREWS	
Tightening torque	11 N•m ± 1 N•m (97 lbf•**in** ± 9 lbf•**in**)

ROTOR

Rotor Removal

Remove *MAGNETO COVER*. See procedure in this subsection.

Lock crankshaft (refer to *CRANKSHAFT LOCKING PROCEDURE* in the *BOTTOM END* subsection).

REQUIRED TOOL	
CRANKSHAFT LOCKING BOLT (P/N 529 035 617)	

Heat screw in order to break the Loctite.

Remove screw and washer securing rotor to crankshaft.

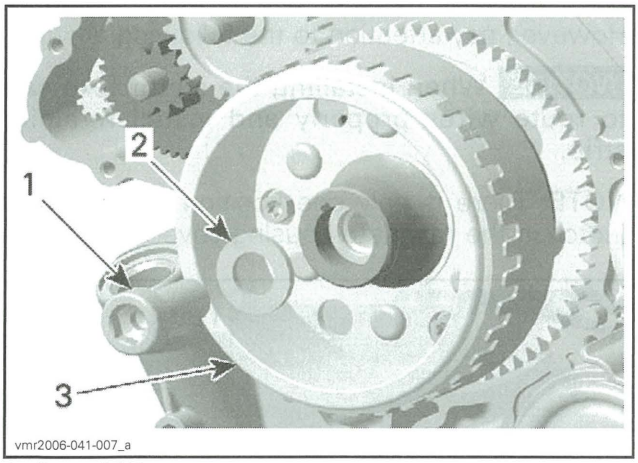

1. *Screw M16*
2. *Washer*
3. *Rotor*

Remove rotor.

REQUIRED TOOL	
MAGNETO PULLER (P/N 529 035 748)	
CRANKSHAFT PROTECTOR (P/N 529 036 034)	

NOTE: Use grease to place protector on crankshaft end prior to screw on the magneto puller.

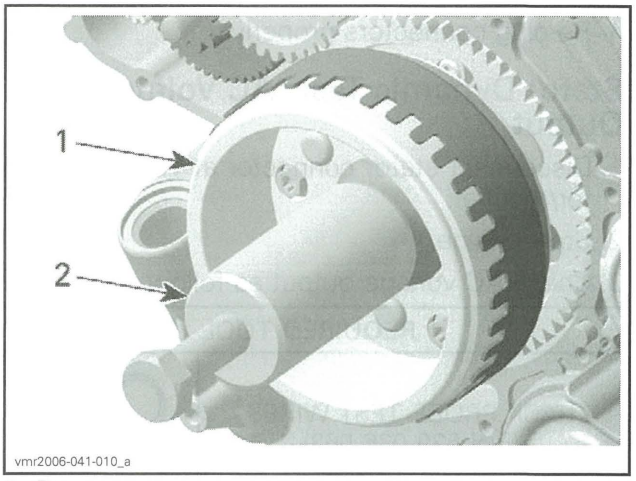

1. *Rotor*
2. *Magneto puller*

Screw magneto puller bolt to remove rotor.

Rotor Inspection

Check inner side of rotor for scratches or other damage.

Blow pressurized air in the rotor oil bore and make sure it is not clogged.

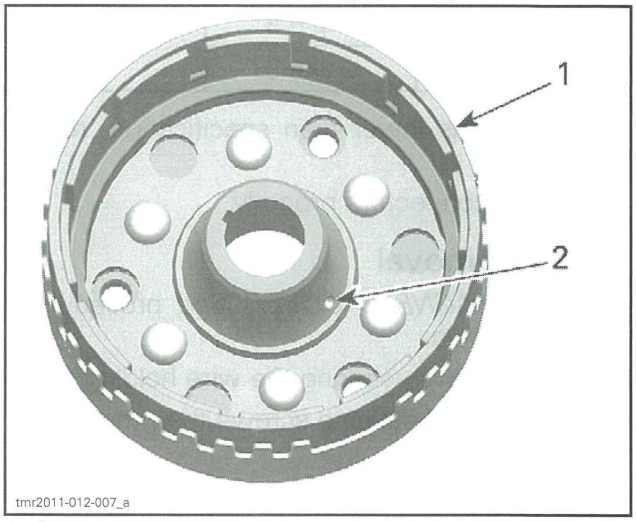

1. *Rotor*
2. *Oil bore*

Check keyway of the rotor for wear or damages.

Check if trigger wheel teeth are bent or otherwise damaged.

Check woodruff key and keyway on the crankshaft for wear or damages.

Replace parts as necessary.

Rotor Installation

For installation, reverse the removal procedure. However, pay attention to the following.

Use PULLEY FLANGE CLEANER (P/N 413 711 809) to clean following:

- Crankshaft taper
- Oil passage in crankshaft taper
- Thread in crankshaft
- Rotor taper
- Oil bore in rotor.

NOTICE **Taper on crankshaft and rotor must be free of grease.**

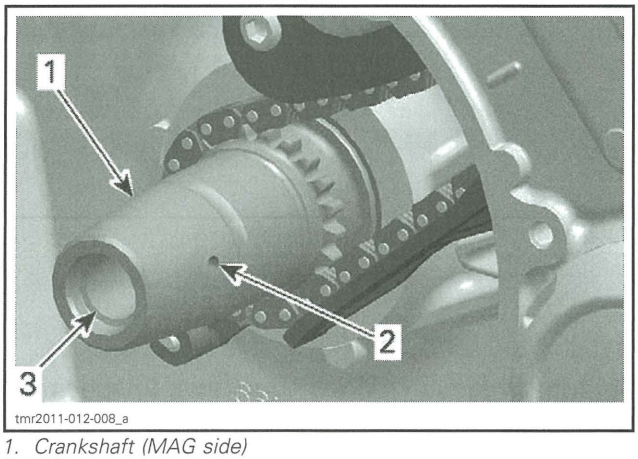

1. Crankshaft (MAG side)
2. Oil passage
3. Threads

Oil sprag clutch and install sprag clutch gear.

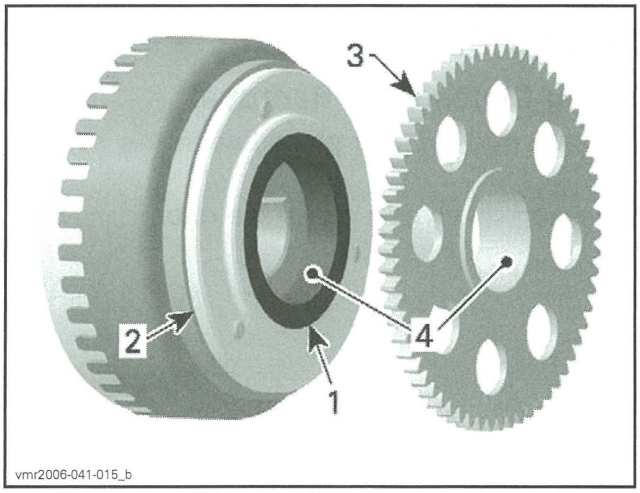

1. Sprag clutch
2. Sprag clutch housing
3. Sprag clutch gear
4. Apply engine oil here

Slide rotor onto crankshaft. The woodruff key and the keyway must be aligned.

Rotate starter double gear counterclockwise to align intermediate gear teeth with sprag clutch gear.

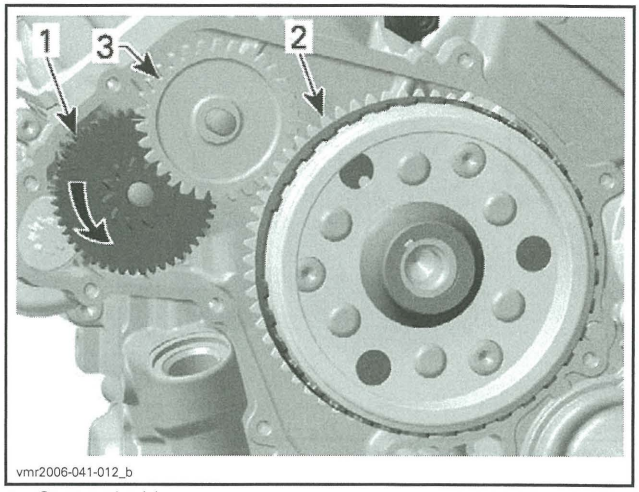

1. Starter double gear
2. Sprag clutch gear
3. Intermediate gear

ROTOR RETAINING SCREW	
Service product	LOCTITE 648 (GREEN) (P/N 413 711 400)
Tightening torque	150 N•m ± 10 N•m (111 lbf•ft ± 7 lbf•ft)

SPRAG CLUTCH

Sprag Clutch Removal

Remove *MAGNETO COVER*. See procedure in this subsection.

Heat screws in order to break the Loctite.

Loosen sprag clutch housing screws located inside rotor.

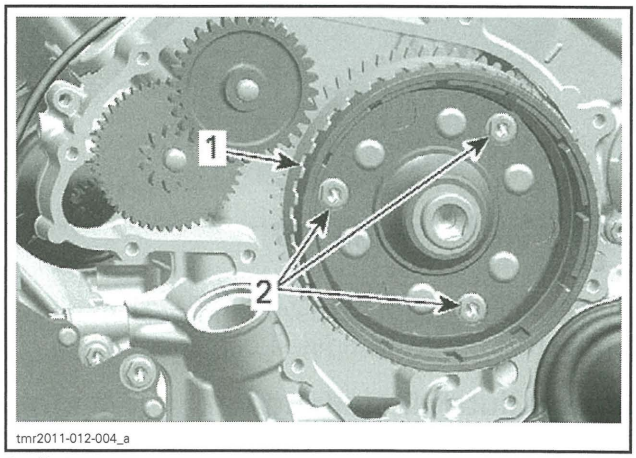

1. Rotor
2. Sprag clutch housing screws

Remove rotor (refer to *ROTOR* in this subsection).

Remove sprag clutch gear.

Remove sprag clutch housing screws and sprag clutch housing.

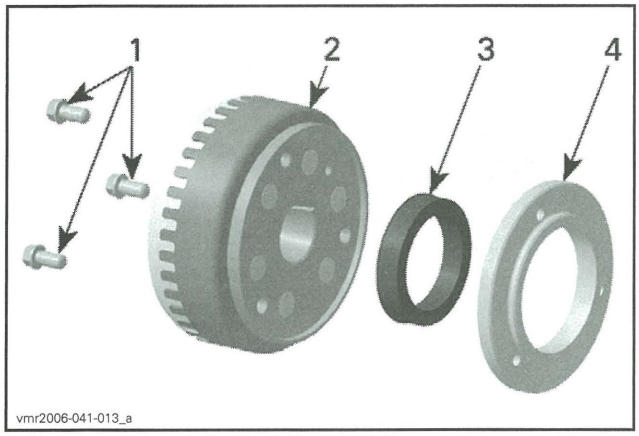

1. *Sprag clutch housing screws*
2. *Rotor*
3. *Sprag clutch*
4. *Sprag clutch housing*

Sprag Clutch Inspection

Inspect sprag clutch and sprag clutch housing for wear and damage.

Also check the collar of the sprag clutch gear.

Rotate sprag clutch gear in sprag clutch.

NOTE: Sprag clutch must lock in counterclockwise direction.

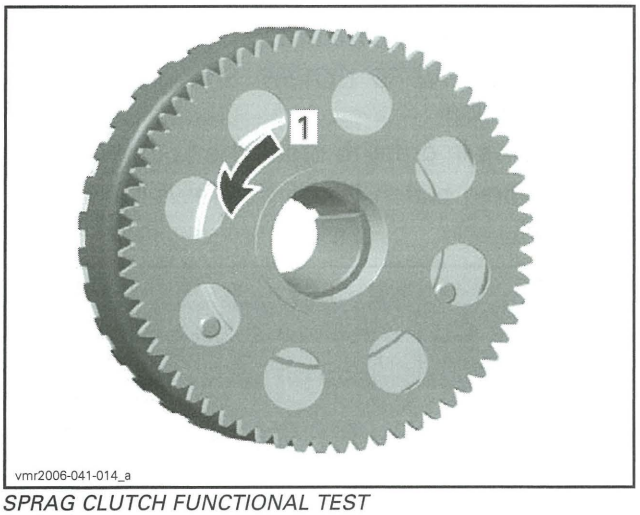

SPRAG CLUTCH FUNCTIONAL TEST
1. *Lock*

NOTE: Sprag clutch, housing and gear must be replaced at the same time, if damaged.

Sprag Clutch Installation

For installation, reverse the removal procedure. Pay attention to the following details.

Apply LOCTITE 648 (GREEN) (P/N 413 711 400) on threads of sprag clutch housing screws.

Install screws but do not torque yet.

Apply engine oil on sprag clutch and sprag clutch gear needle bearing.

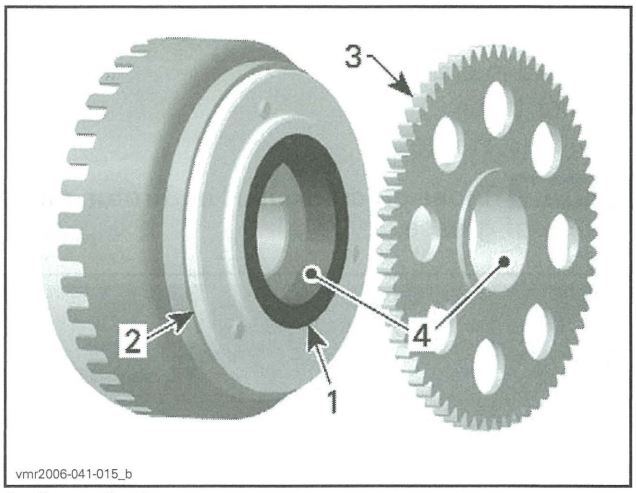

1. *Sprag clutch*
2. *Sprag clutch housing*
3. *Sprag clutch gear*
4. *Apply engine oil here*

Install rotor, refer to *ROTOR* in this subsection.

Tighten sprag clutch housing screws to specification.

SPRAG CLUTCH HOUSING SCREWS	
Tightening torque	30 N•m ± 2 N•m (22 lbf•ft ± 1 lbf•ft)

SPRAG CLUTCH GEAR

Sprag Clutch Gear Removal

Remove *ROTOR*. See procedure in this subsection.

Pull sprag clutch gear out of the rotor.

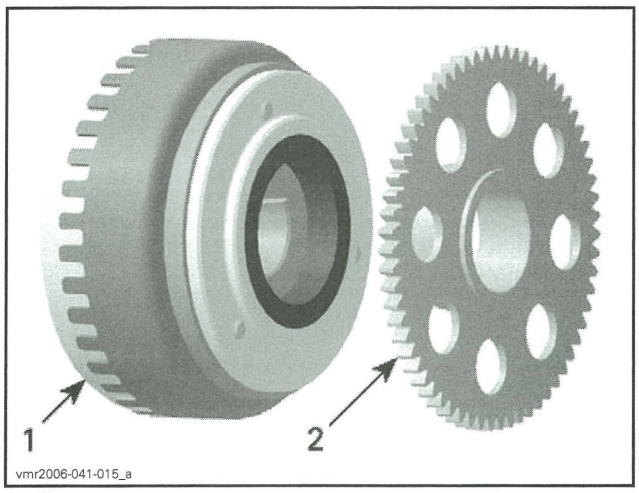

1. *Rotor*
2. *Sprag clutch gear*

Sprag Clutch Gear Inspection

Inspect gear, especially teeth and sprag clutch collar, for wear and other damage.

Check needle bearing condition. Replace sprag clutch gear if necessary.

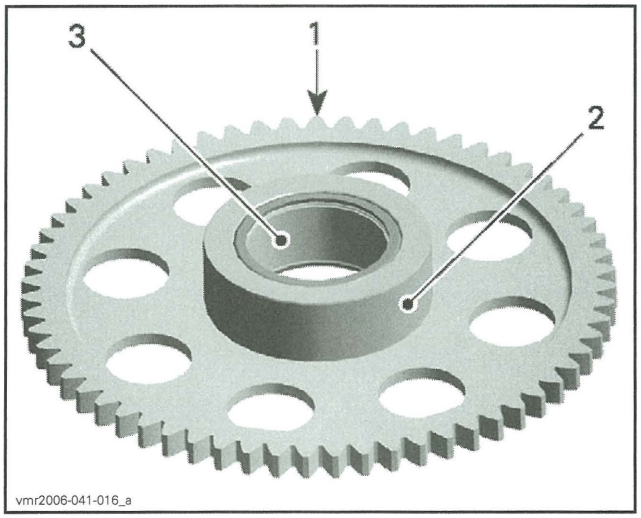

INSPECT
1. *Teeth*
2. *Collar*
3. *Needle bearing*

Sprag Clutch Gear Installation

The installation is the reverse of the removal procedure.

NOTE: Apply engine oil on needle bearing and collar of sprag clutch gear.

STARTER DRIVE GEARS

Starter Drive Gear Location

The starter drive gears are located on the engine MAG side behind the magneto cover.

Starter Drive Gear Removal

Remove *MAGNETO COVER*. See procedure in this subsection.

Remove location pins, starter double gear and intermediate gear.

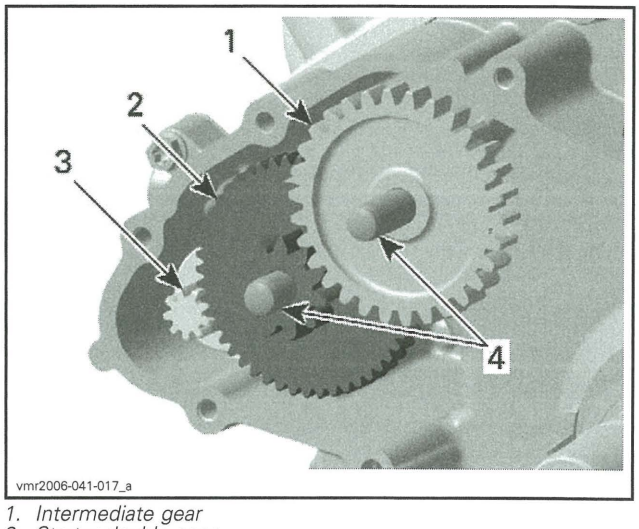

1. *Intermediate gear*
2. *Starter double gear*
3. *Starter gear*
4. *Location pins*

Starter Drive Gear Inspection

Inspect gears and location pins for wear and damage.

Replace parts as necessary.

Starter Drive Gear Installation

The installation is the reverse of the removal procedure. Pay attention to the following details.

Apply LOCTITE 767 (ANTISEIZE LUBRICANT) (P/N 293 800 070) on starter gear before installing the starter double gear.

Apply engine oil on location pins.

INTAKE MANIFOLD

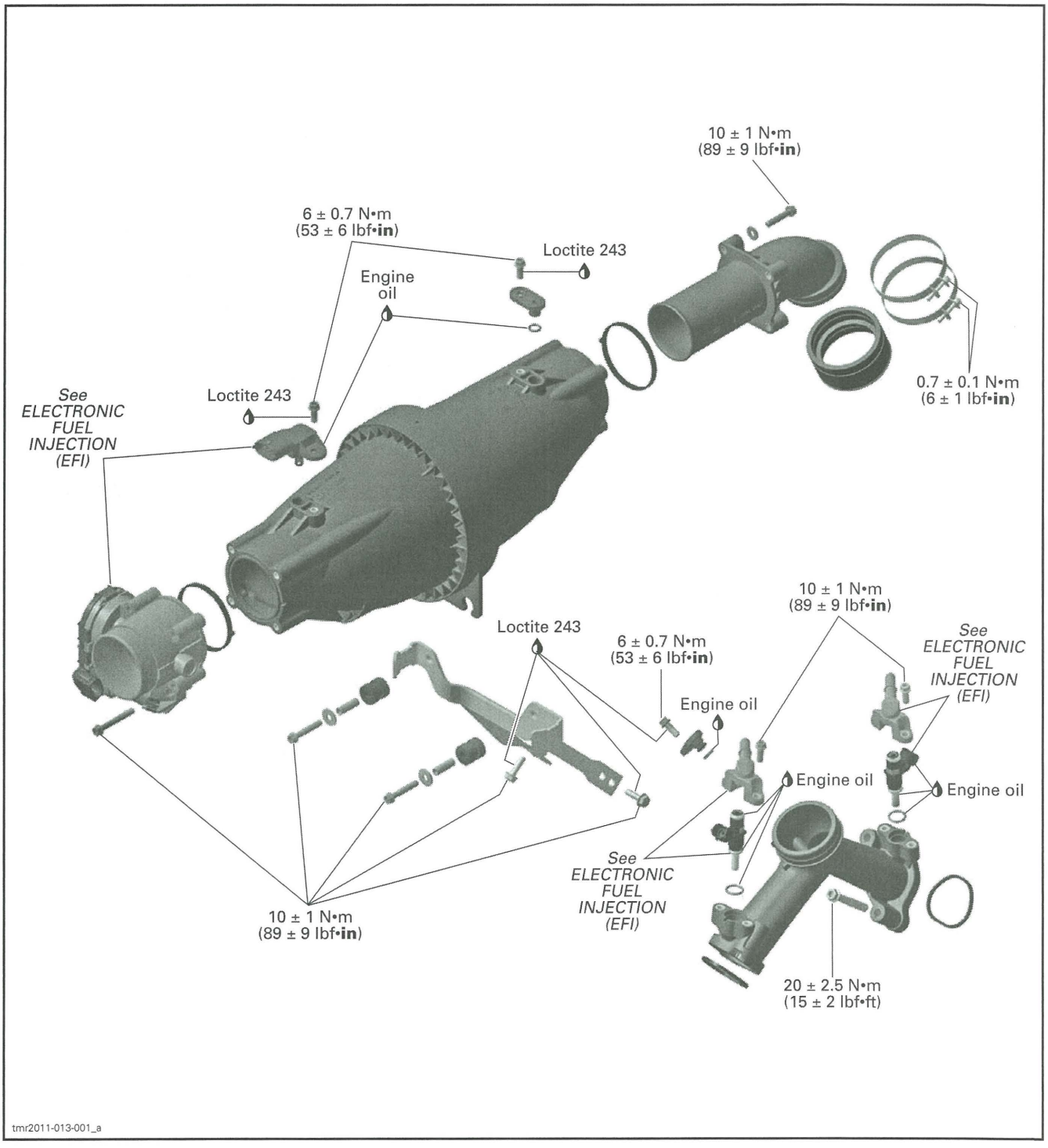

tmr2011-013-001_a

PROCEDURES

PLENUM BRACKET

Plenum Bracket Installation

On cylinder 1, install the plenum bracket using the appropriate mounting holes.

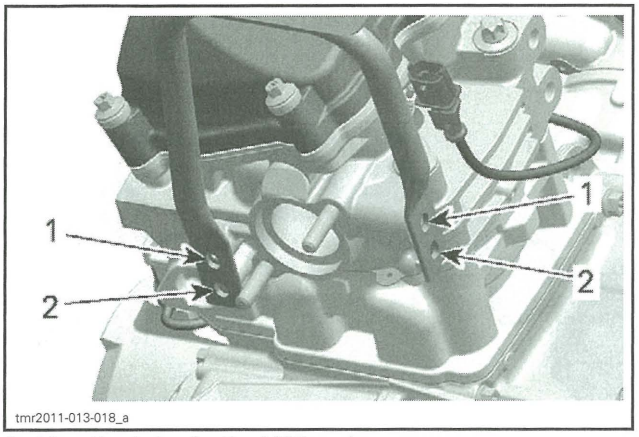

1. *Mounting holes for the 1000 engine*
2. *Mounting holes for the 800R engine*

Tighten plenum bracket retaining screws to specification.

PLENUM BRACKET RETAINING SCREWS	
Tightening torque	10 N•m ± 1 N•m (89 lbf•**in** ± 9 lbf•**in**)

INTAKE MANIFOLD

Intake Manifold Access

Refer to *BODY* and remove the lower console.

Intake Manifold Removal

1. Disable fuel pump using B.U.D.S. Select the **ECM** and **Activation** tabs, then click on **Disabled** in the fuel pump area.

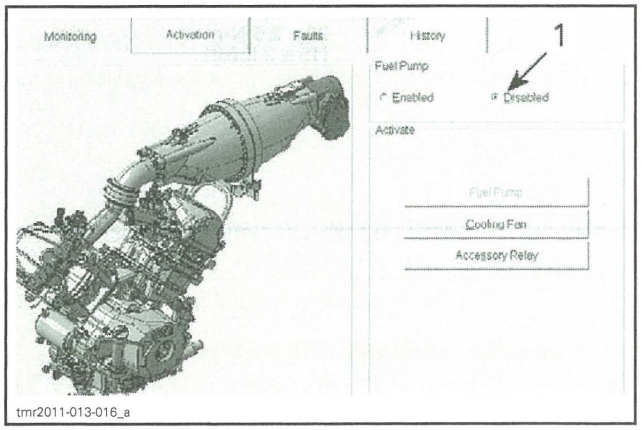

1. *Click "Disabled"*

2. Release fuel pressure by running engine until it runs out of gas.
3. Disconnect the fuel hoses at the fuel injectors, refer to *ELECTRONIC FUEL INJECTION (EFI).*

⚠ CAUTION The fuel hose may still be under pressure.

4. Disconnect fuel injectors electrical connectors.
5. Remove plenum adapter elbow.

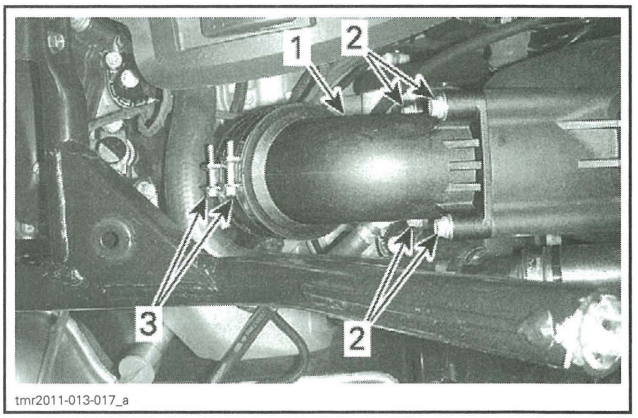

1. *Plenum adapter elbow*
2. *Remove retaining screws*
3. *Remove clamps*

6. Remove intake manifold from engine.

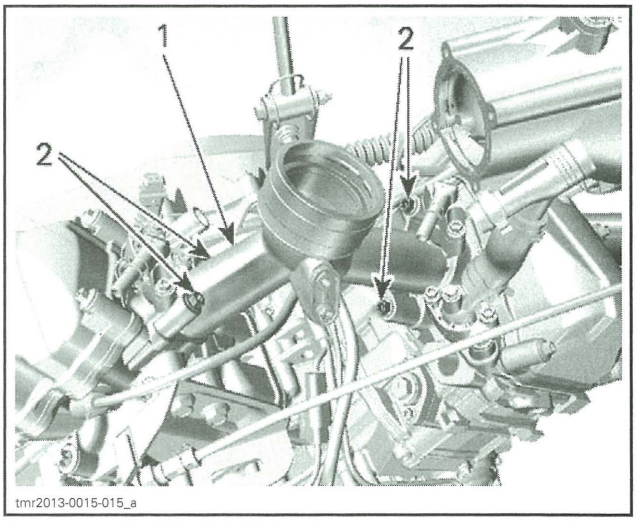

SOME PARTS REMOVED FOR CLARITY
1. *Intake manifold*
2. *Remove retaining screws (x4)*

Intake Manifold Inspection

Check intake manifold for cracks, warping at flanges or any other damage. Replace if necessary.

Intake Manifold Installation

The installation is the reverse of the removal procedure. However, pay attention to the following.

Tighten intake manifold retaining screws to specified torque one cylinder at a time.

INTAKE MANIFOLD RETAINING SCREWS	
Tightening torque	20 N•m ± 2.5 N•m (15 lbf•ft ± 2 lbf•ft)

Tighten elbow retaining screws to specification.

ELBOW RETAINING SCREWS	
Tightening torque	10 N•m ± 1 N•m (89 lbf•**in** ± 9 lbf•**in**)

Tighten intake manifold clamps to specification.

INTAKE MANIFOLD CLAMPS	
Tightening torque	0.7 N•m ± 0.1 N•m (6 lbf•**in** ± 1 lbf•**in**)

Enable fuel pump using B.U.D.S.

TOP END

SERVICE TOOLS

Description	Part Number	Page
CRANKSHAFT LOCKING BOLT	529 035 617	117
ENGINE LEAK DOWN TEST KIT	529 035 661	103
PISTON CIRCLIP INSTALLER	529 035 921	121
PISTON CIRCLIP INSTALLER	529 036 153	121
PISTON RING COMPRESSOR	529 035 919	117
TDC DIAL INDICATOR	414 104 700	103
VALVE GUIDE INSTALLER	529 036 140	116
VALVE GUIDE REMOVER 5 MM	529 035 924	115
VALVE SPRING COMPRESSOR CUP	529 035 764	112
VALVE SPRING COMPRESSOR	529 035 724	112

SERVICE TOOLS – OTHER SUPPLIER

Description	Part Number	Page
SNAP-ON PLIERS	YA 8230	113

SERVICE PRODUCTS

Description	Part Number	Page
LOCTITE 767 (ANTISEIZE LUBRICANT)	293 800 070	116

CYLINDER HEAD NO. 1

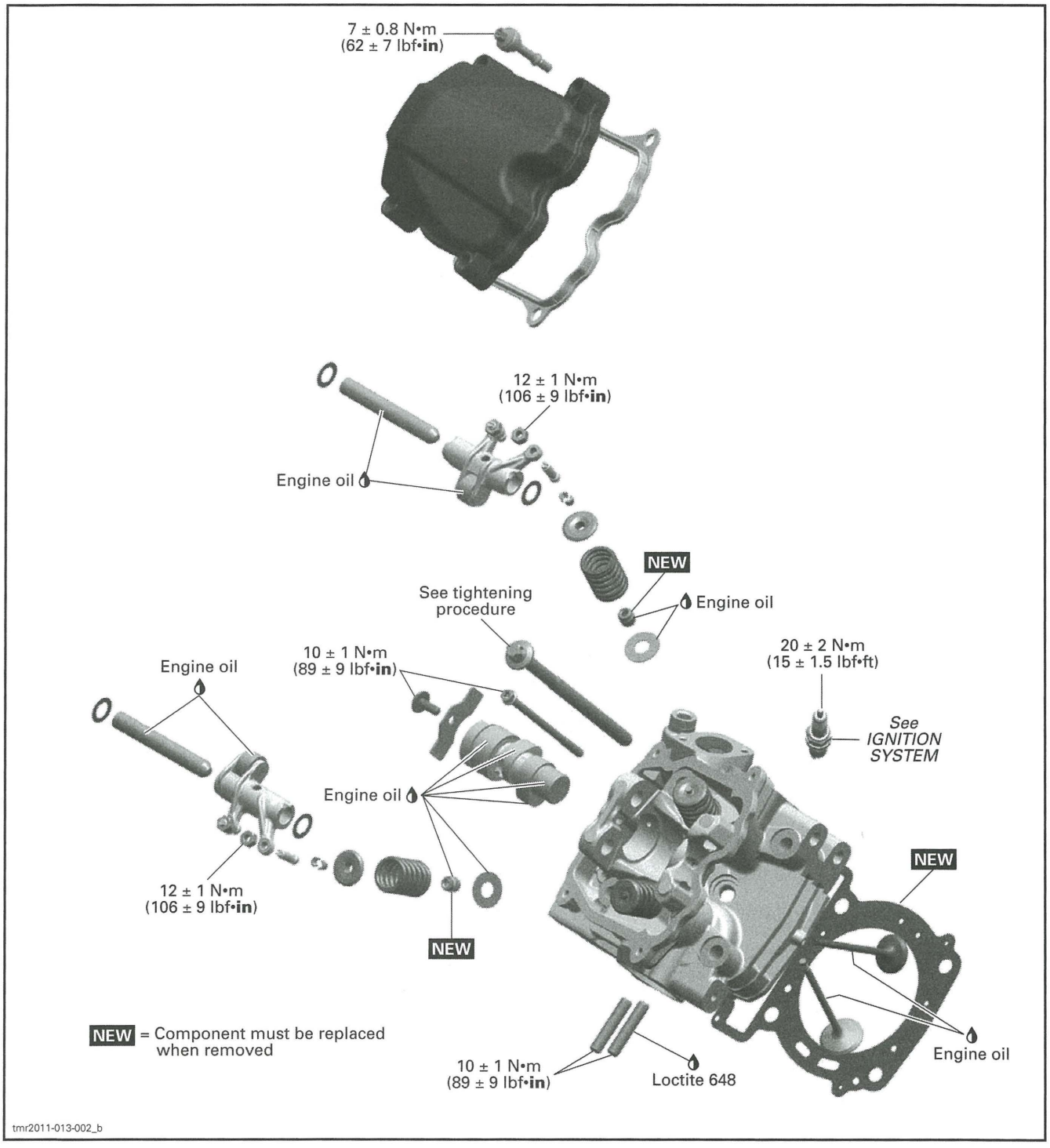

CYLINDER HEAD NO. 2

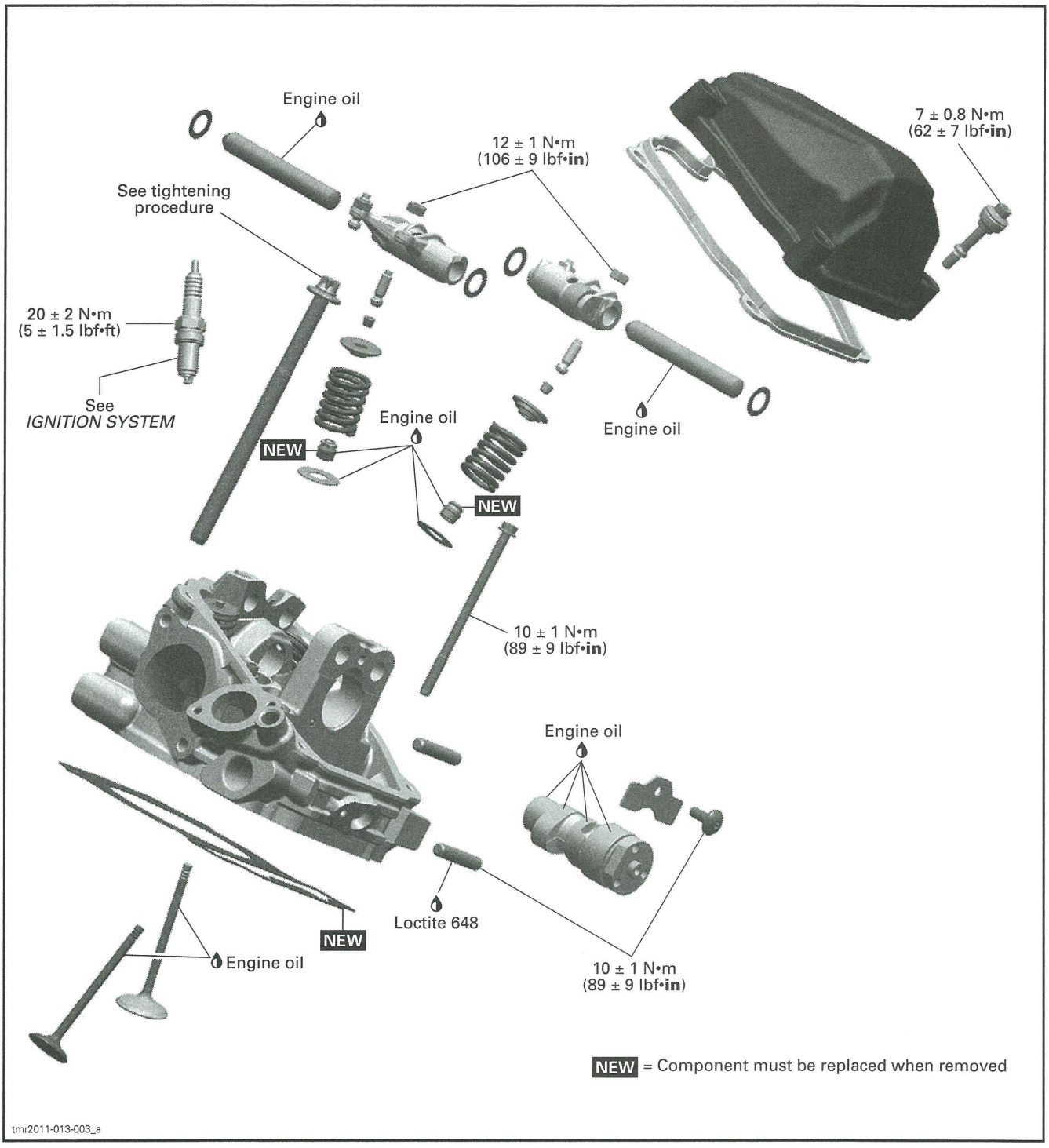

CYLINDERS AND PISTONS

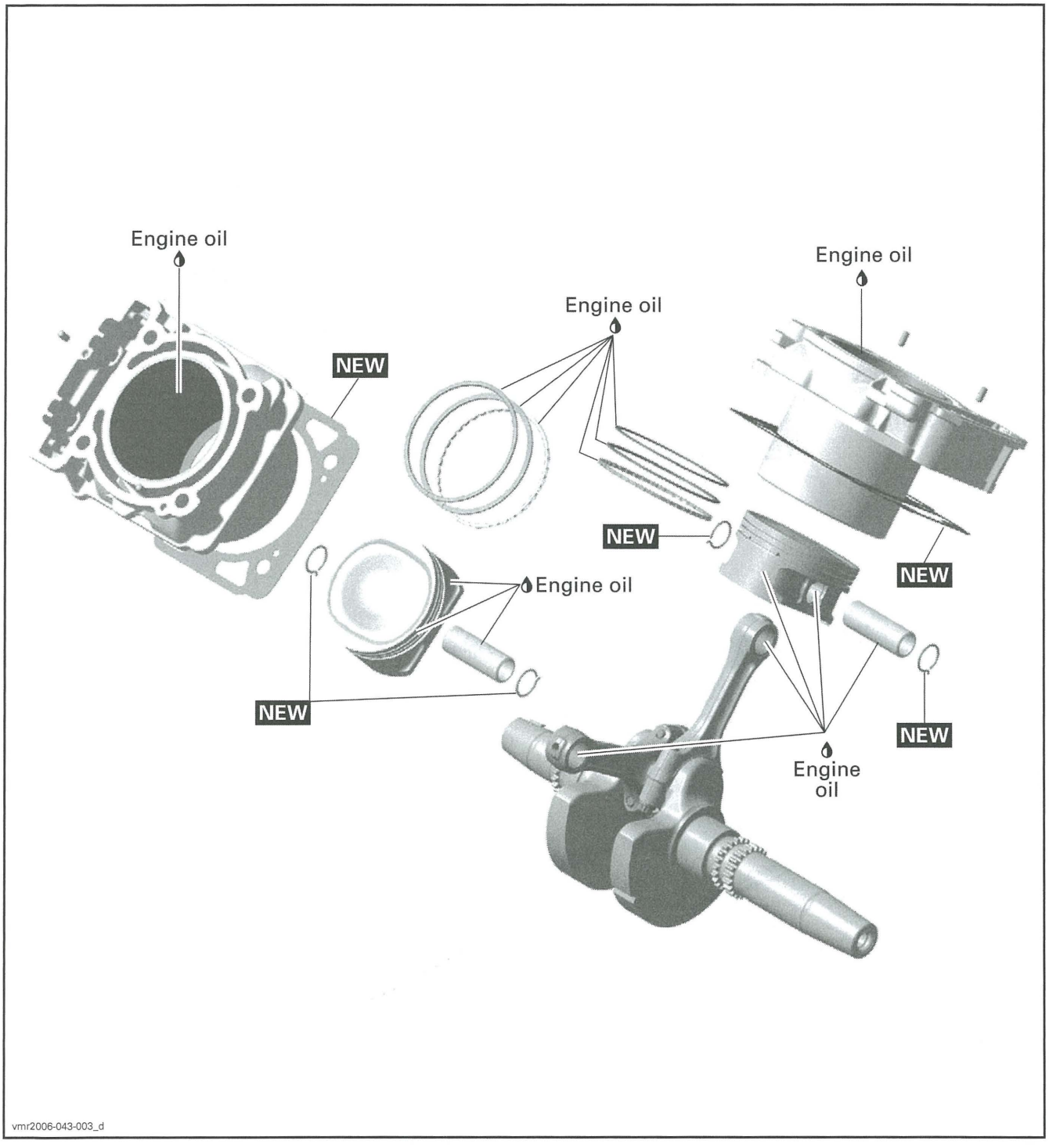

GENERAL

Special reference are made in the text for procedures which are different for cylinder no. 1 and cylinder no. 2.

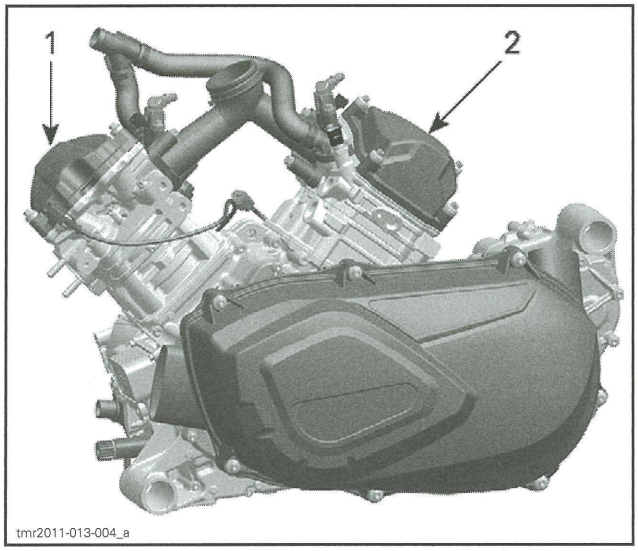

1. *Cylinder 1 (front)*
2. *Cylinder 2 (rear)*

When diagnosing an engine problem, always perform a cylinder leak test.

NOTE: Even though the following procedures do not require the engine removal, many illustrations show the engine out of the vehicle for more clarity.

IMPORTANT: Note position of parts on disassembly. This may help to find the root cause of a problem. A component that is not replaced should be reinstalled in the same position as originally mounted.

INSPECTION

LEAK TEST

Before performing the cylinder leak test, verify the following:

- Clamp(s) tightness
- Radiator and hoses.

NOTE: For best accuracy, the leak test should be done with the engine at normal operating temperature.

⚠ WARNING

Prevent burning yourself on hot engine parts.

Preparation

Disconnect battery.

⚠ WARNING

Always respect this order for disassembly; disconnect BLACK (-) cable first.

Remove radiator cap.

⚠ WARNING

To prevent burning yourself only remove the radiator cap by wearing the appropriate safety equipment.

Unplug spark plug cable.

Clean spark plug area and remove spark plug from cylinder head.

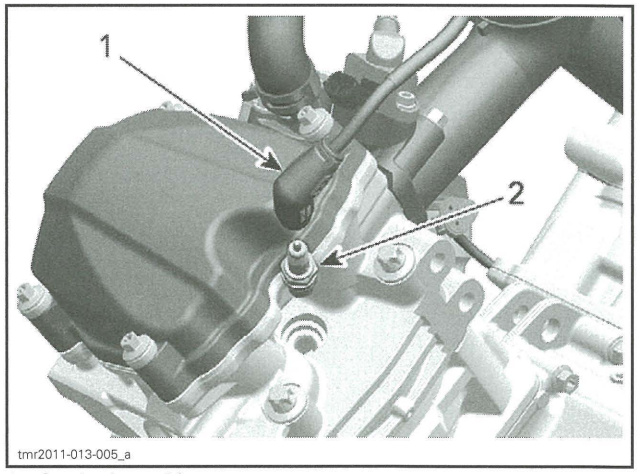

1. *Spark plug cable*
2. *Spark plug*

Remove valve cover.

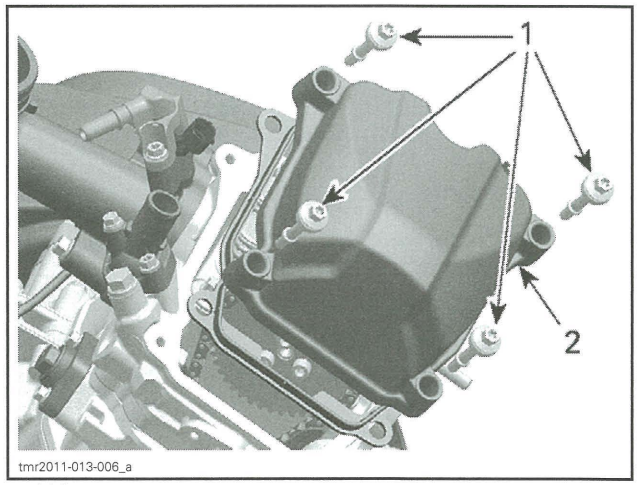

1. *Valve cover screws*
2. *Valve cover*

Rotate crankshaft until piston is at ignition TDC.

To turn crankshaft, there are two possible procedures.

First Procedure

Turn the drive pulley.

Second Procedure

1. Remove plug screw with O-ring from magneto cover.
2. Use a 14 mm Allen key and turn crankshaft.

NOTICE **Turn only clockwise to avoid loosening of magneto flywheel Allen screw.**

Set the piston to precisely ignition TDC.

REQUIRED TOOL	
TDC DIAL INDICATOR (P/N 414 104 700)	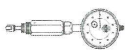

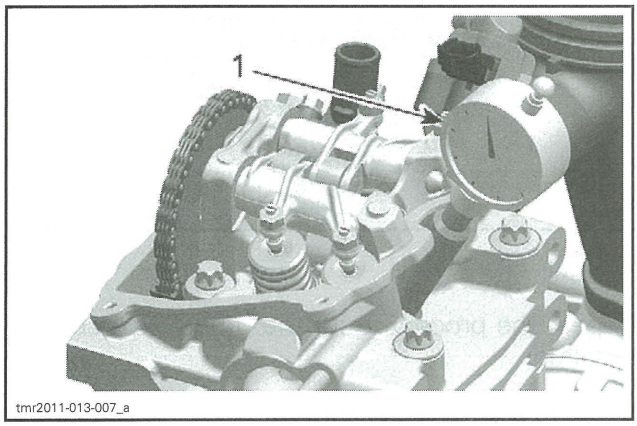

1. Dial gauge

NOTE: If a dial gauge is not available, use a screwdriver or another similarly suitable tool.

NOTICE Do not scratch or damage piston/cylinder surface.

NOTE: At ignition TDC the marks on the camshaft timing gear have to be parallel to cylinder head base as per following illustration.

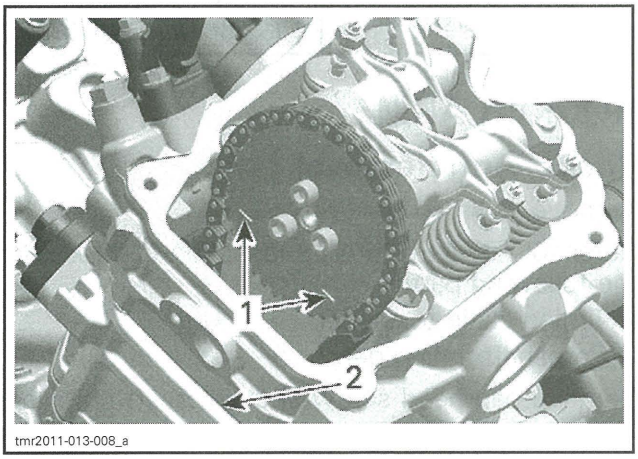

1. Marks on camshaft timing gear
2. Cylinder head base

Leak Test

REQUIRED TOOL	
ENGINE LEAK DOWN TEST KIT (P/N 529 035 661)	

Connect leak tester to adequate air supply.

Set needle of measuring gauge to zero.

NOTE: All testers have specific instructions on gauge operation and required pressure.

Install gauge adapter into previously cleaned spark plug hole.

Supply combustion chamber with air pressure.

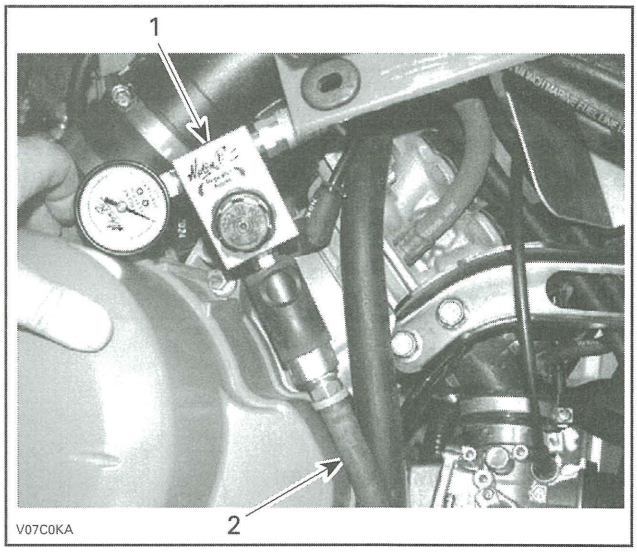

TYPICAL
1. Leak tester
2. Air supply hose

Note the amount or percentage of leakage (depending on tester).

LEAKAGE PERCENTAGE	ENGINE CONDITION
0% to 15%	Excellent condition
16% to 25%	Good condition
26% to 40%	Fair condition; reduced engine performance
41% and higher	Poor condition, diagnose and repair engine

NOTE: To make sure there is no false reading due to a valves not perfectly seated, tap each valve adjustment screw (on the rocker) using a soft hammer.

Diagnosis

Listen for air leaks.

- Air escaping in intake port/throttle body means leaking intake valve(s).
- Air escaping in exhaust port means leaking exhaust valve(s).
- Air bubbles in the coolant (radiator) means leaking cylinder head gasket.
- Air/coolant escaping from cylinder/head means damaged gasket(s) and/or loosened screws.

- Air escaping into crankcase area means excessively worn cylinder and/or broken piston rings.
- Air/oil escaping from crankcase means damaged gasket and/or loosened screws (refer to *BOTTOM END* subsection).

NOTE: For all the checkpoints mentioned above, see the appropriate engine section to diagnose and repair the engine.

Reassembly

Reverse the preparation procedure. Ensure to respect torque values and use of appropriate products/lubricants. Refer to exploded views in other subsections of this manual as required.

PROCEDURES

VALVE COVER

Valve Cover Access

Refer to *BODY* and remove:
- Upper console
- Lower console
- LH and RH lateral console panels.

Valve Cover Removal

Remove valve cover screws of valve cover.

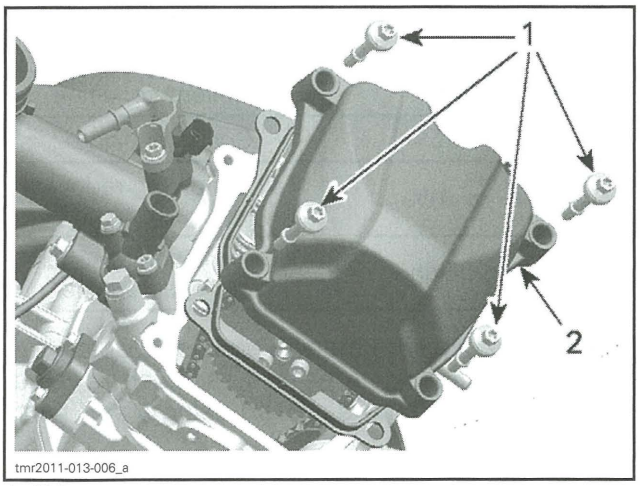

1. Valve cover screws
2. Valve cover

Remove valve cover and gasket.

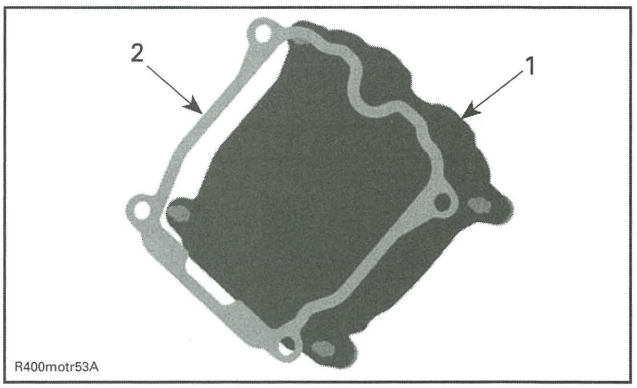

1. Valve cover
2. Gasket

Repeat the procedure for the other valve cover if required.

Valve Cover Inspection

Check the gasket on the valve cover if it is brittle, cracked or hard. If so, replace the gasket.

Valve Cover Installation

For installation, reverse the removal procedure.

Tighten valve cover retaining screws to specified torque in a criss-cross sequence.

VALVE COVER RETAINING SCREWS	
Tightening torque	7 N•m ± 0.8 N•m (62 lbf•**in** ± 7 lbf•**in**)

ROCKER ARM

Rocker Arm Removal

Remove valve cover.

Refer to *TIMING CHAIN* subsection and remove the following parts:
- Timing chain tensioner
- Camshaft timing gear.

Remove pan head screw and camshaft retaining plate.

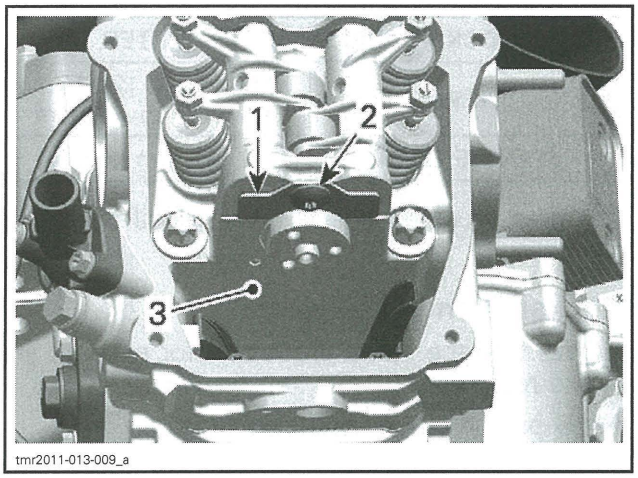

1. *Camshaft retaining plate*
2. *Pan head screw*
3. *Cylinder head*

Remove rocker arm shafts.

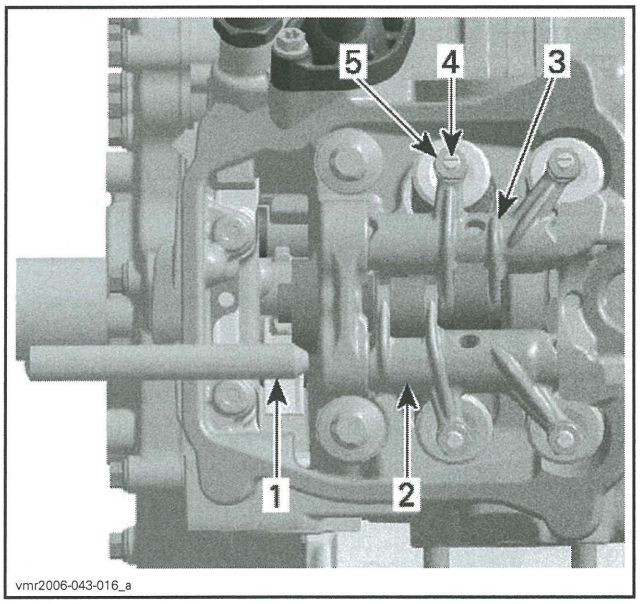

1. *Rocker arm shaft*
2. *Rocker arm (exhaust side)*
3. *Rocker arm (intake side)*
4. *Adjustment screw*
5. *Lock nut*

Remove rocker arm assembly (exhaust side and intake side) with adjustment screws and lock nuts.

Remove thrust washers.

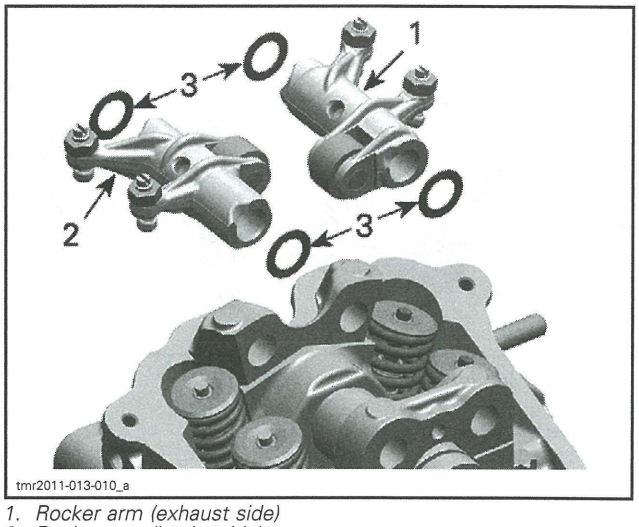

1. *Rocker arm (exhaust side)*
2. *Rocker arm (intake side)*
3. *Thrust washers*

NOTICE **Pay attention not to lose thrust washers or drop them into the timing chain compartment.**

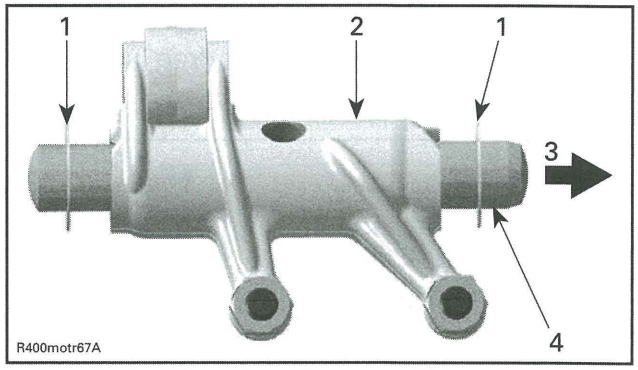

1. *2 thrust washers*
2. *Rocker arm (exhaust side)*
3. *Cylinder head (spark plug side)*
4. *Big taper to spark plug side*

Rocker Arm Inspection

Inspect each rocker arm for cracks and scored friction surfaces. If so, replace rocker arm assembly.

Check the rocker arm rollers for free movement, wear and excessive radial play. Replace rocker arm assembly if necessary.

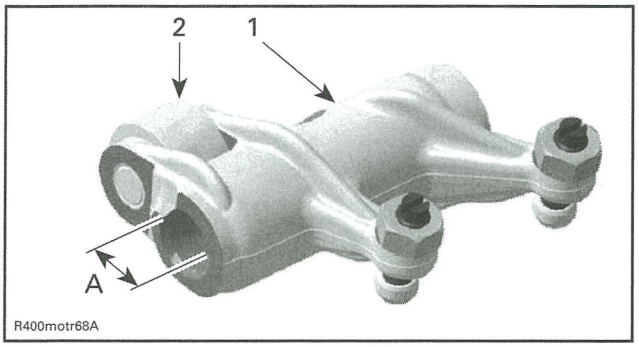

1. *Rocker arm (exhaust side)*
2. *Roller*

A. *Bore for rocker arm shaft*

Measure rocker arm bore diameter. If diameter is out of specification, change the rocker arm assembly.

ROCKER ARM BORE DIAMETER	
NEW	12.036 mm to 12.050 mm (.4739 in to .4744 in)
SERVICE LIMIT	12.060 mm (.4748 in)

Check adjustment screws for free movement, cracks and/or excessive play.

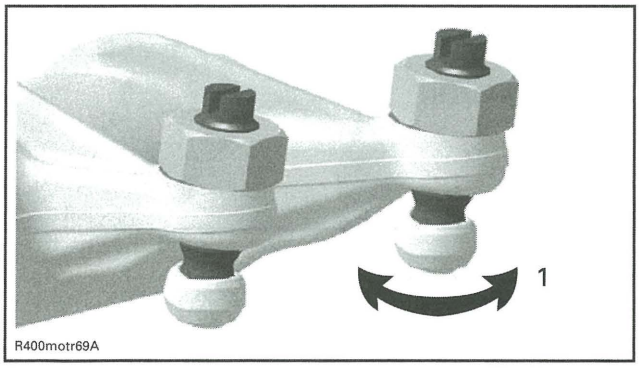

1. *Free movement of adjustment screw top*

Rocker Arm Shaft Inspection

Check for scored friction surfaces; if so, replace parts.

Measure rocker arm shaft diameter.

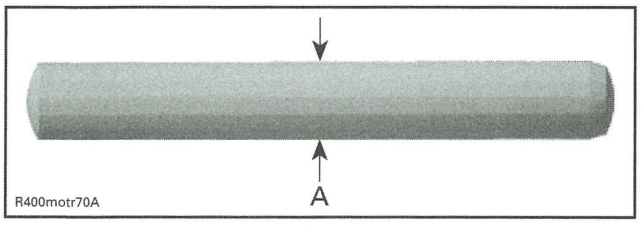

A. *Measure rocker arm shaft diameter here*

ROCKER ARM SHAFT DIAMETER	
NEW	12.00 mm to 12.018 mm (.4724 in to .4731 in)
SERVICE LIMIT	11.990 mm (.472 in)

Any area worn excessively will require parts replacement.

Rocker Arm Installation

NOTE: Use the same procedure for exhaust and intake rocker arm.

Apply engine oil on rocker arm shaft.

Install the rocker arm shafts with the chamfered edge first and use following procedure.

Insert a rocker arm pin through rocker arm pin bore.

Install a thrust washer at timing chain side, then the proper rocker arm (exhaust side or intake side).

Push in rocker arm shaft until its chamfer reaches the end of rocker arm bore.

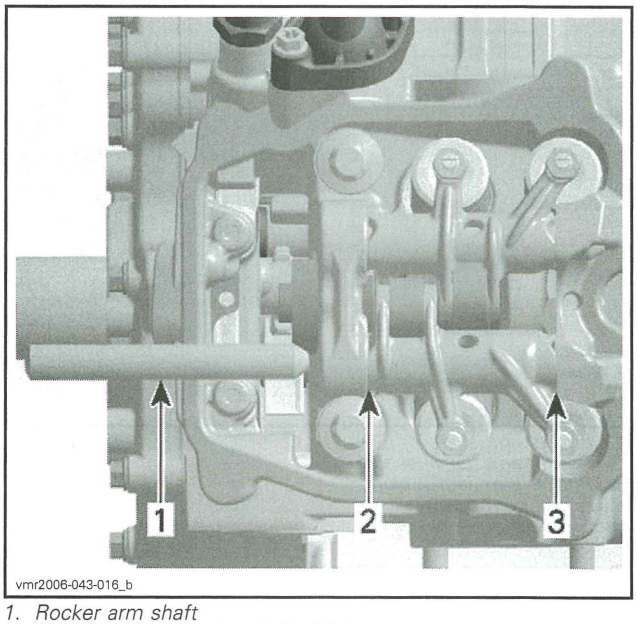

1. *Rocker arm shaft*
2. *Thrust washer (timing chain side)*
3. *Thrust washer (spark plug side)*

Place the other thrust washer and push rocker arm shaft to end position.

Install the camshaft retaining plate.

Adjust valve clearance, refer to *PERIODIC MAINTENANCE PROCEDURE*.

CAMSHAFT

NOTE: The engine is equipped with two different camshafts.

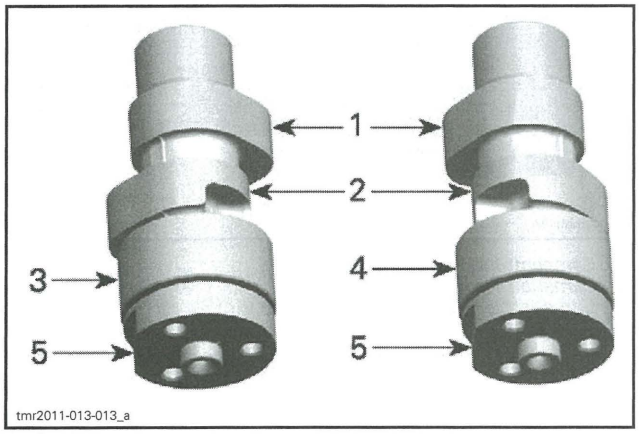

1. *Intake cam*
2. *Exhaust cam*
3. *Camshaft of cylinder 1*
4. *Camshaft of cylinder 2*
5. *Flat spot*

Camshaft Removal

The removal procedure is the same for both camshafts.

NOTICE Each camshaft is different in design. Thus, it is important not to mix up any parts of the camshaft assembly with that of the other cylinder. Keep parts as a group.

Remove valve cover (see *VALVE COVER* in this subsection).

Refer to *TIMING CHAIN* subsection and remove the following parts:

- Timing chain tensioner
- Camshaft timing gear.

Remove the camshaft retaining plate.

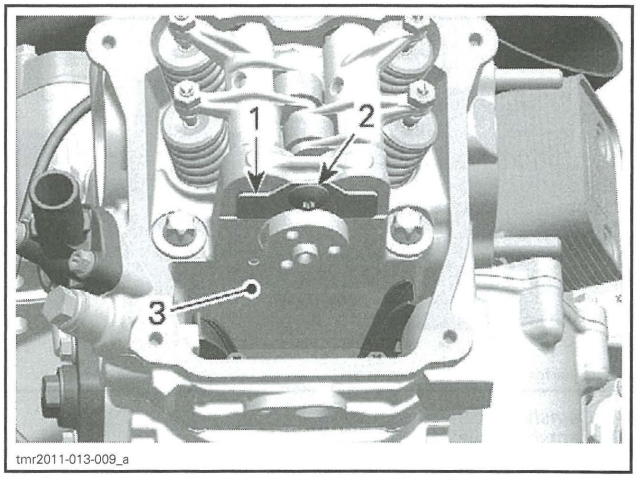

1. *Camshaft retaining plate*
2. *Pan head screw*
3. *Cylinder head*

Remove rocker arms (see *ROCKER ARM* in this subsection).

Remove the camshaft.

NOTE: For removal rotate camshaft so that intake/exhaust lobe shows to upper side of cylinder head.

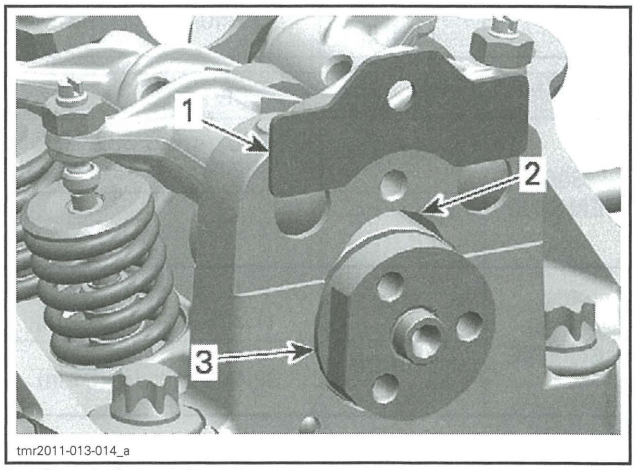

1. *Camshaft retaining plate*
2. *Area for camshaft lobes*
3. *Camshaft*

Camshaft Inspection

Camshaft Lobe Inspection

Check each lobe for scoring, scuffing, cracks or other signs of wear.

Measure camshaft lobe height using a micrometer.

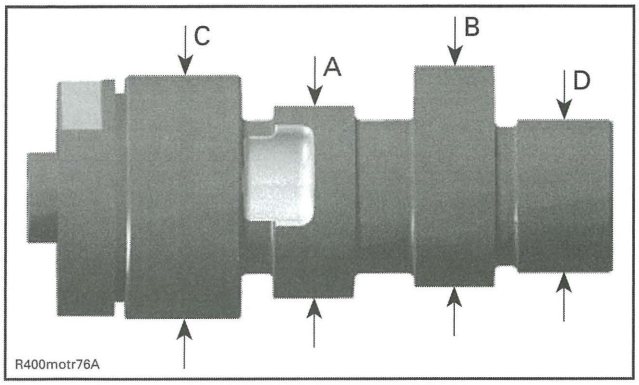

A. Camshaft lobe (exhaust valves)
B. Camshaft lobe (intake valves)
C. Camshaft journal (timing chain side)
D. Camshaft journal (spark plug side)

CAMSHAFT LOBE (EXHAUST)		
800R ENGINE	NEW	32.950 mm to 33.150 mm (1.2972 in to 1.3051 in)
	SERVICE LIMIT	32.930 mm (1.2965 in)
1000 ENGINE	NEW	32.860 mm to 33.060 mm (1.294 in to 1.302 in)
	SERVICE LIMIT	32.840 mm (1.293 in)

CAMSHAFT LOBE (INTAKE)		
800R ENGINE	NEW	32.890 mm to 33.090 mm (1.2949 in to 1.3028 in)
	SERVICE LIMIT	32.870 mm (1.2941 in)
1000 ENGINE	NEW	32.960 mm to 33.160 mm (1.298 in to 1.306 in)
	SERVICE LIMIT	32.940 mm (1.297 in)

Measure camshaft bearing in cylinder head. Refer to *CYLINDER HEAD INSPECTION* in this subsection.

Camshaft Journal Inspection

Check each journal for scoring, scuffing, cracks or other signs of wear.

Measure camshaft journal using a micrometer.

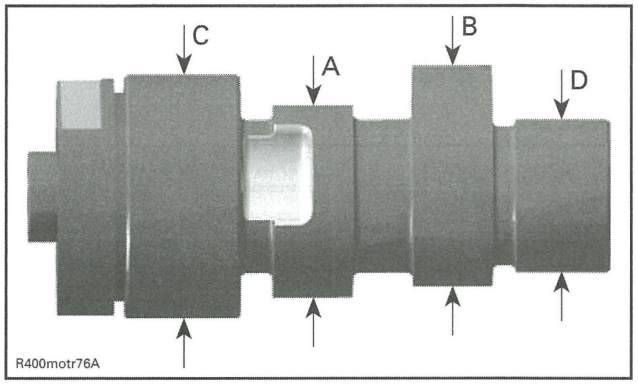

A. Camshaft lobe (exhaust valves)
B. Camshaft lobe (intake valves)
C. Camshaft journal (timing chain side)
D. Camshaft journal (spark plug side)

CAMSHAFT JOURNAL (TIMING CHAIN SIDE)	
NEW	34.959 mm to 34.975 mm (1.3763 in to 1.377 in)
SERVICE LIMIT	34.950 mm (1.376 in)

CAMSHAFT JOURNAL (SPARK PLUG SIDE)	
NEW	21.959 mm to 21.980 mm (.8645 in to .8654 in)
SERVICE LIMIT	21.950 mm (.8642 in)

Camshaft Installation

For installation, reverse the removal procedure. Pay attention to the following details.

NOTICE **The camshafts are not identical in design. Do not invert the camshafts during assembly. Any mix-up of the components will lead to engine damage.**

Place the camshaft retaining plate in the slot of the camshaft.

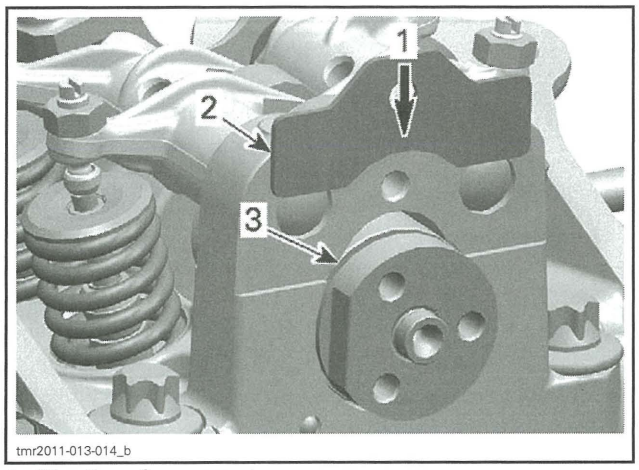

1. Direction of movement
2. Camshaft retaining plate
3. Slot retaining camshaft

For other parts, refer to proper installation procedure.

CYLINDER HEAD

Cylinder Head Access

Refer to *BODY* and remove:
- Lower console
- LH and RH lateral console panels.

Remove LH passenger handhold bar.

LH PASSENGER HANDHOLD BAR

On cylinder 2, remove the shift cable bracket.

Refer to *INTAKE MANIFOLD* subsection to remove following parts:
- Plenum, for cylinder 1
- Intake manifold.

Cylinder Head Removal

The removal procedure is the same for both cylinder heads.

Drain coolant. Refer to *ENGINE COOLANT REPLACEMENT* in the *PERIODIC MAINTENANCE PROCEDURES* subsection.

NOTE: Before removing cylinder head, blow out remaining coolant by air pressure. During cylinder head removal, the remaining coolant in cylinder head could overflow into the engine and a little quantity of coolant could drop into the engine. In this case, the engine oil will be contaminated.

Disconnect spark plug wire.

Disconnect temperature sensor connector, located at rear cylinder head.

Remove the valve cover and its gasket (see *VALVE COVER* in this subsection).

Refer to *TIMING CHAIN* subsection and remove the following parts:
- Timing chain tensioner
- Camshaft timing gear.

First remove the M6 cylinder head screws, then the M10 cylinder head screws.

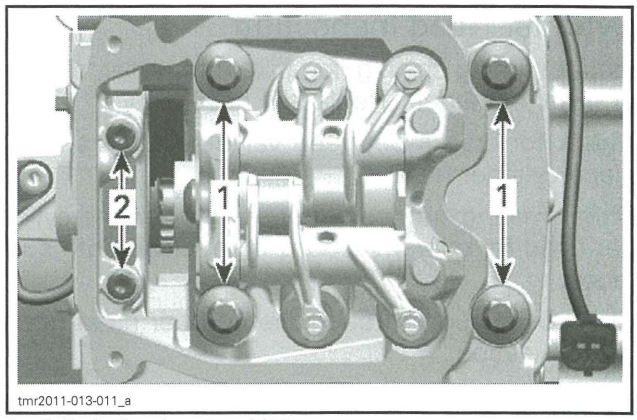

1. Cylinder head screws M10
2. Cylinder head screws M6

Pull up cylinder head.

Remove timing chain guide (fixed).

Remove and discard the cylinder head gasket.

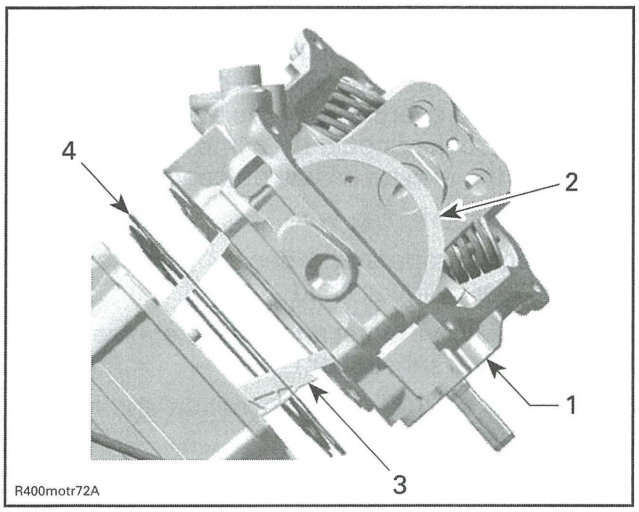

1. *Cylinder head*
2. *Timing chain*
3. *Chain guide (fixed)*
4. *Cylinder head gasket*

Cylinder Head Inspection

Inspect timing chain guide (fixed) for wear, cracks or other damages. Replace if necessary.

Check for cracks between valve seats, if so, replace cylinder head.

Check mating surface between cylinder and cylinder head for contamination. If so, clean both surfaces.

Clean oil support through the cylinder head from contamination.

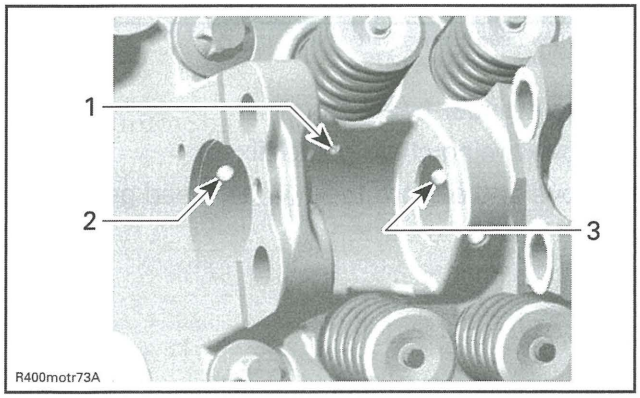

1. *Oil port to lubricate camshaft lobes intake/exhaust*
2. *Oil supply to camshaft bearing journal (timing chain side)*
3. *Oil supply to camshaft bearing journal (spark plug side)*

Cylinder Head Camshaft Bearing Inspection

Measure camshaft bearing in cylinder head.

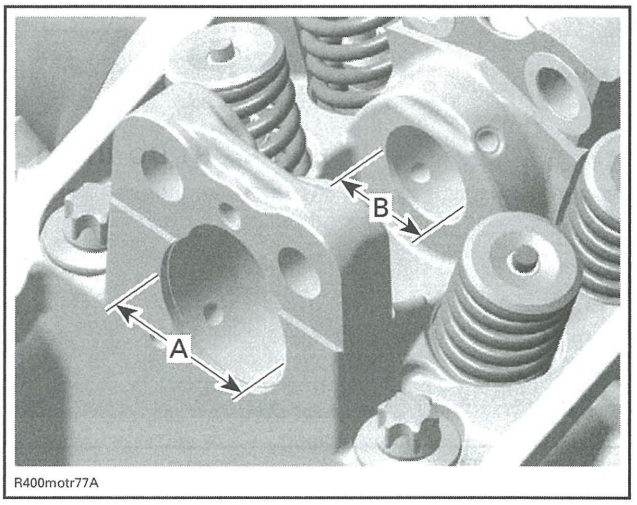

A. Camshaft bearing (timing chain side)
B. Camshaft bearing (spark plug side)

CAMSHAFT BEARING (TIMING CHAIN SIDE)	
NEW	35.000 mm to 35.025 mm (1.378 in to 1.3789 in)
SERVICE LIMIT	35.040 mm (1.3795 in)
CAMSHAFT BEARING (SPARK PLUG SIDE)	
NEW	22.000 mm to 22.021 mm (.8661 in to .867 in)
SERVICE LIMIT	22.040 mm (.8677 in)

Cylinder Head Installation

NOTE: Never invert front and rear cylinder heads. On the 800R, cylinder heads are not identical.

For installation, reverse the removal procedure. Pay attention to the following details.

Ensure dowel pins are in place.

NOTICE **Timing chain guide (fixed) has to be fixed between cylinder and cylinder head.**

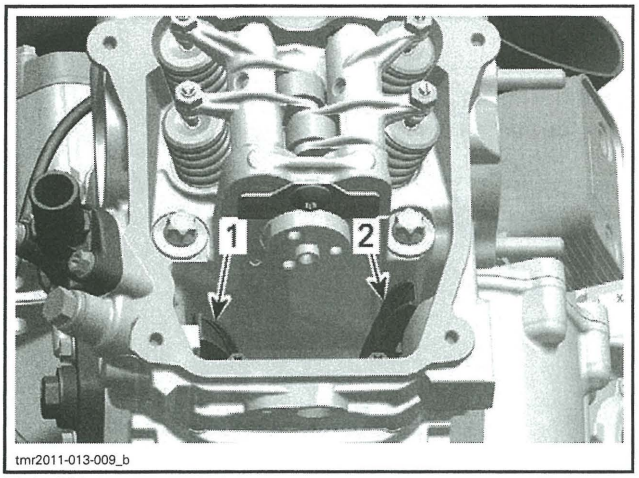

TYPICAL
1. *Timing chain guide (tensioner side) mounted in crankcase*
2. *Timing chain guide (fixed) between cylinder and cylinder head*

Install a NEW cylinder head gasket.

Install cylinder head screws in correct position.

NOTICE Cylinder head screws have different sizes and lengths.

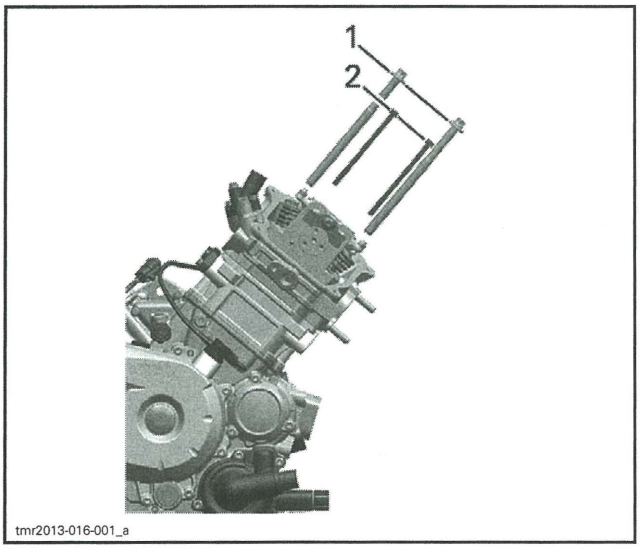

1. *Location no. 1*
2. *Location no. 2*

CYLINDER HEAD SCREW IDENTIFICATION		
800R engine	Location no. 1	M10 x 140
	Location no. 2	M6 x 85
1000 engine	Location no. 1	M10 x 159
	Location no. 2	M6 x 105

Tighten M10 cylinder head screws FIRST as per following specifications.

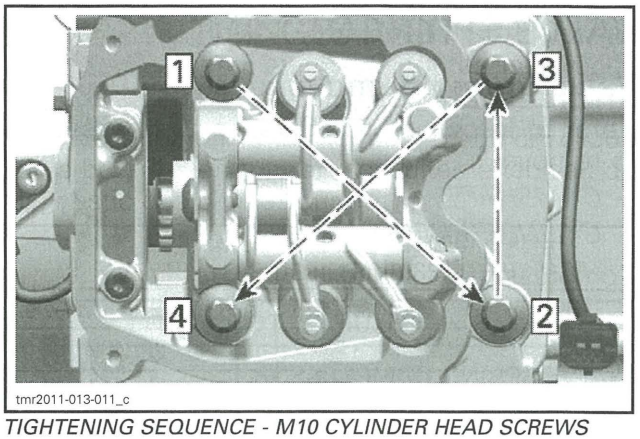

TIGHTENING SEQUENCE - M10 CYLINDER HEAD SCREWS

M10 CYLINDER HEAD SCREWS	
Tightening torque (step 1)	20 N•m ± 1 N•m (15 lbf•ft ± 1 lbf•ft)

M10 CYLINDER HEAD SCREWS	
Tightening torque (step 2)	180° +/- 5°

Tighten M6 cylinder head screws as per following specification.

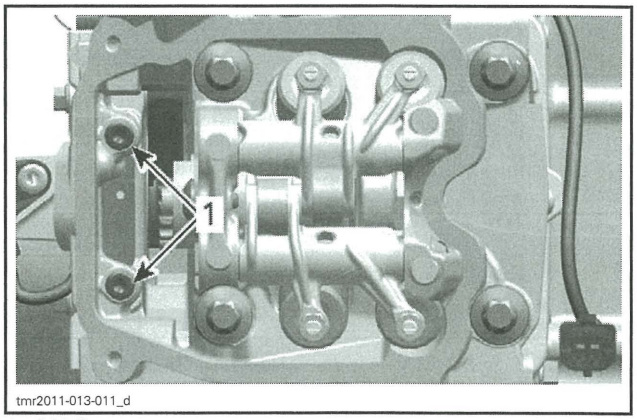

1. *M6 Screws*

M6 CYLINDER HEAD SCREWS	
Tightening torque	10 N•m ± 1 N•m (89 lbf•**in** ± 9 lbf•**in**)

Check timing chain guide (tensioner side) for movement.

On cylinder 1, install the plenum bracket, refer to *INTAKE MANIFOLD* subsection.

VALVE SPRINGS

Valve Spring Removal

Refer to following procedures in this subsection to remove:

- *CAMSHAFT*
- *CYLINDER HEAD.*

Compress valve spring.

REQUIRED TOOL	
VALVE SPRING COMPRESSOR (P/N 529 035 724)	
VALVE SPRING COMPRESSOR CUP (P/N 529 035 764)	

⚠ WARNING

Always wear safety glasses when disassembling valve springs. Be careful when unlocking valves. Components could fly away because of the strong spring preload.

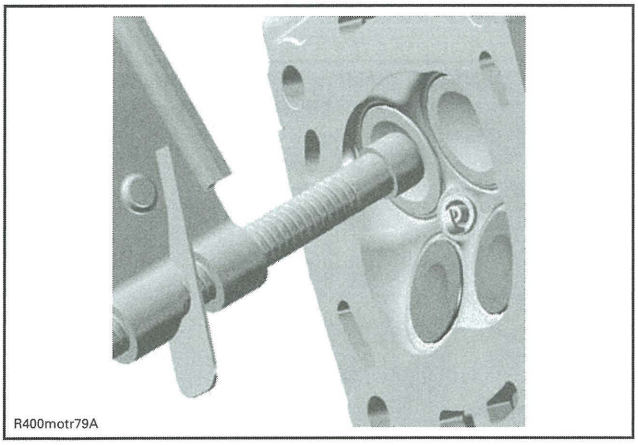

LOCATE VALVE SPRING COMPRESSOR CLAMP IN CENTER OF THE VALVE

Remove valve cotters.

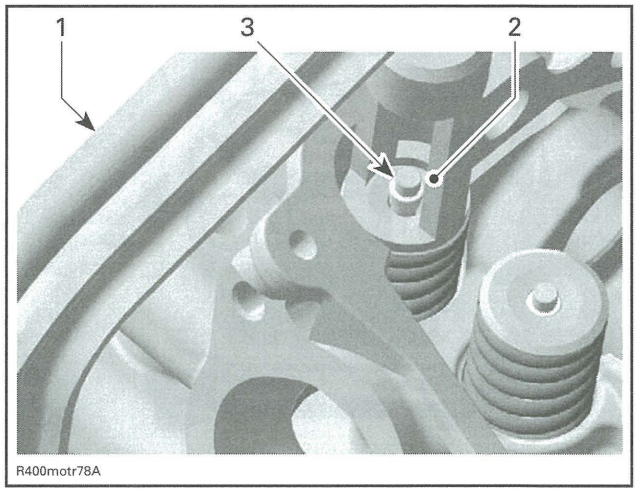

1. *Valve spring compressor clamp*
2. *Valve spring compressor cup*
3. *Valve cotter*

Remove tools and withdraw valve spring retainer and valve spring.

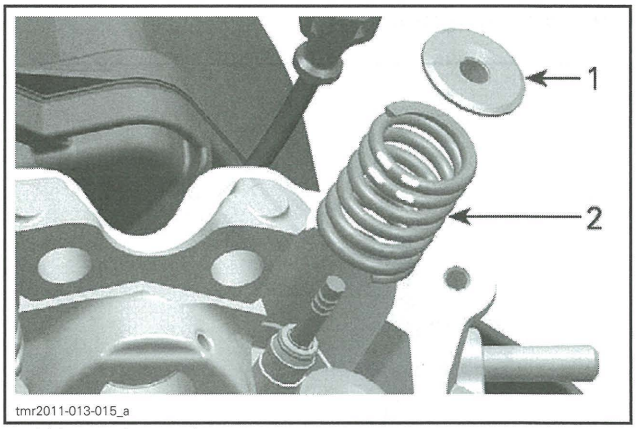

1. *Valve spring retainer*
2. *Valve spring*

Valve Spring Inspection

Check valve spring for visible damage. If so, replace valve spring.

Check valve spring for free length and straightness.

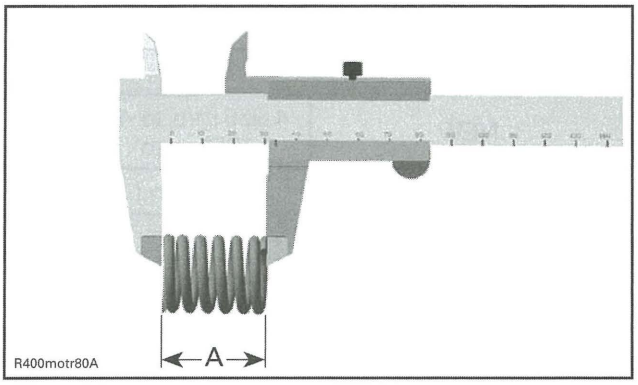

A. Valve spring length

VALVE SPRING FREE LENGTH	
NEW	40.81 mm (1.607 in)
SERVICE LIMIT	39.00 mm (1.535 in)

Replace valve springs if not within specifications.

Valve Spring Installation

For installation, reverse the removal procedure. Pay attention to the following details.

Colored area of the valve spring must be placed on top.

To ease installation of cotters, apply oil or grease on them so that they remain in place while releasing the spring.

NOTE: Valve cotter must be properly engaged in valve stem grooves.

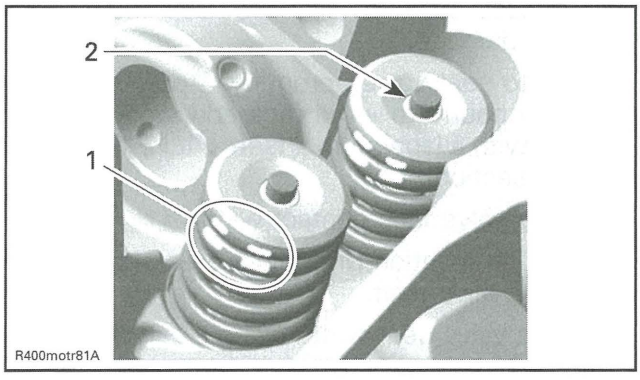

1. Position of the valve spring
2. Valve cotter

After spring is installed, ensure it is properly locked by tapping on valve stem end with a soft hammer so that valve opens and closes a few times.

NOTICE **An improperly locked valve spring will cause engine damage.**

VALVES

Valve Removal

Remove valve spring, see *VALVE SPRING* in this subsection.

Push valve stem, then pull valves (intake and exhaust) out of valve guide.

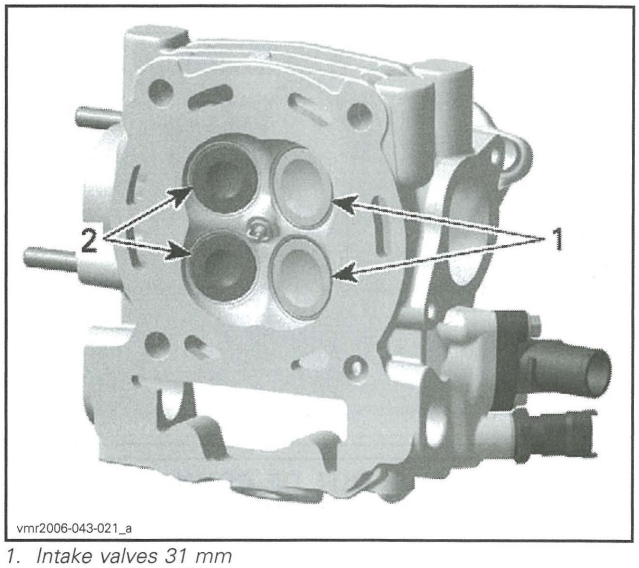

1. Intake valves 31 mm
2. Exhaust valves 27 mm

Remove valve stem seal and discard it.

REQUIRED TOOL	
SNAP-ON PLIERS (P/N YA 8230)	

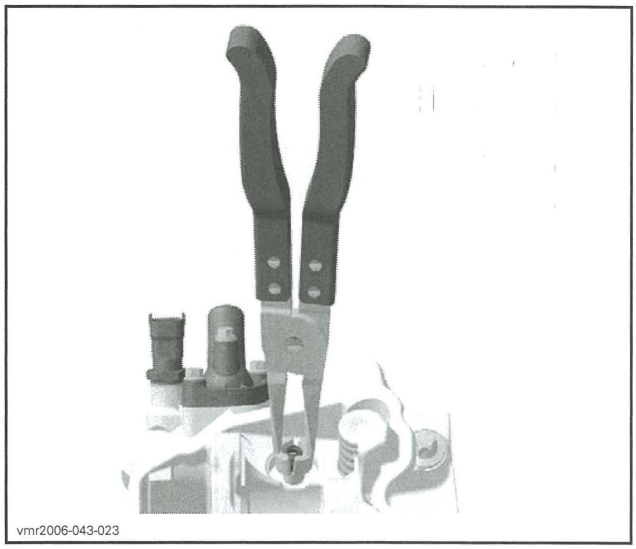

Valve Inspection

Whenever valves are removed always inspect valve guides. Refer to *VALVE GUIDES* in this subsection.

Valve Stem Seal

Always install **NEW** seals whenever valves are removed.

Valve

Inspect valve surface, check for abnormal stem wear and bending. If out of specification, replace by a new one.

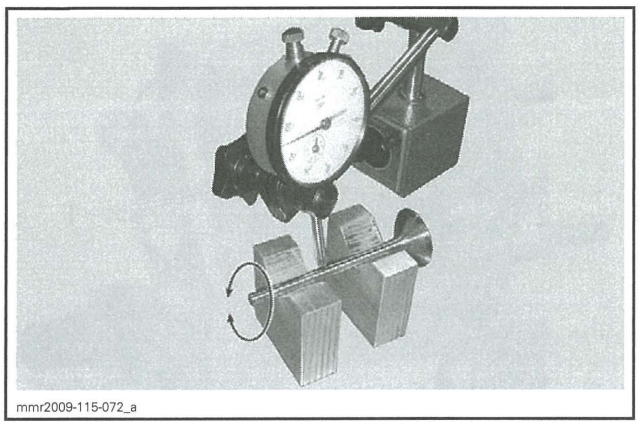
mmr2009-115-072_a

VALVE OUT OF ROUND (INTAKE AND EXHAUST VALVES)	
NEW	0.005 mm (.0002 in)
SERVICE LIMIT	0.06 mm (.0024 in)

Valve Stem

Measure valve stem in three places using a micrometer.

Replace valve if valve stem is out of specification or has other damages such as wear or friction surface.

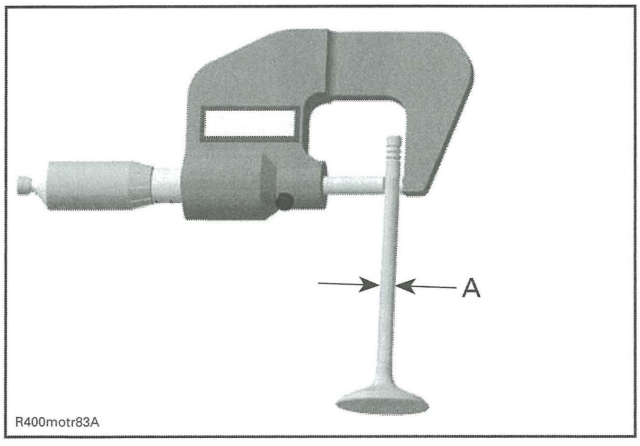

A. Valve stem diameter

VALVE STEM DIAMETER	
EXHAUST VALVE	
NEW	4.956 mm to 4.970 mm (.1951 in to .1957 in)
SERVICE LIMIT	4.930 mm (.1941 in)
INTAKE VALVE	
NEW	4.966 mm to 4.980 mm (.1955 in to .1961 in)
SERVICE LIMIT	4.930 mm (.1941 in)

Valve Face and Seat

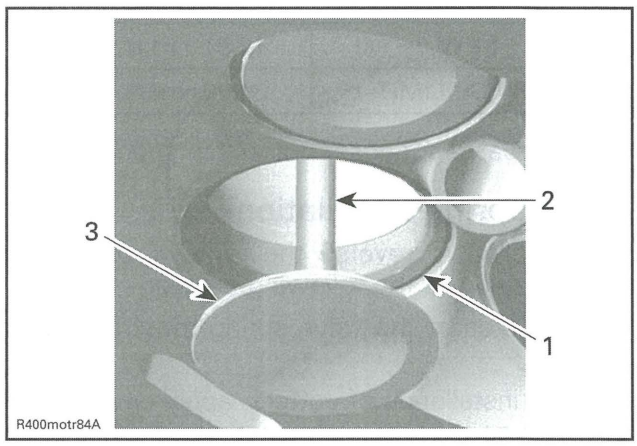

1. Valve seat
2. Exhaust valve contaminated area
3. Valve face (contact surface to valve seat)

Check valve face and seat for burning or pittings and replace valve or cylinder head if there are signs of damage.

Ensure to seat valves properly. Apply some lapping compound to valve face and work valve on its seat with a lapping tool (see *VALVE GUIDES* in this subsection).

Measure valve face contact width.

NOTE: The location of contact area should be in center of valve seat.

Measure valve seat width using a caliper.

VALVE SEAT CONTACT WIDTH	
EXHAUST VALVE	
NEW	1.25 mm to 1.55 mm (.049 in to .061 in)
SERVICE LIMIT	2.00 mm (.079 in)
INTAKE VALVE	
NEW	1.05 mm to 1.35 mm (.041 in to .053 in)
SERVICE LIMIT	1.80 mm (.071 in)

If valve seat contact width is too wide or has dark spots, replace the cylinder head.

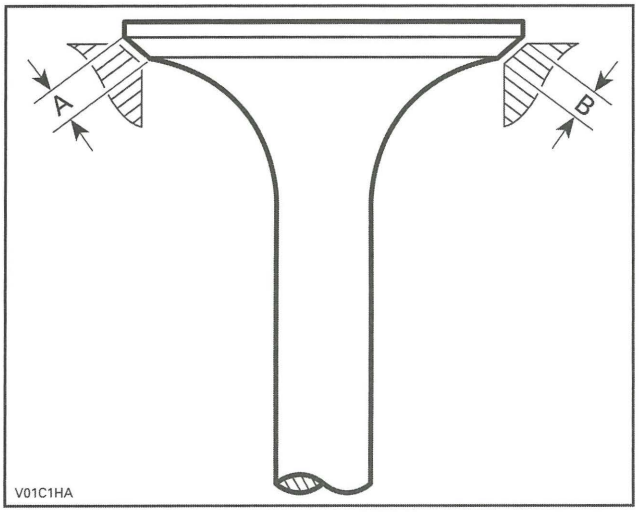

A. Valve face contact width
B. Valve seat contact width

Valve Installation

For installation, reverse the removal procedure. Pay attention to the following details.

Install a NEW valve stem seal. Make sure thrust washer is installed before installing seal.

Apply engine oil on valve stem and install it.

NOTICE Be careful when valve stem is passed through sealing lips of valve stem seal.

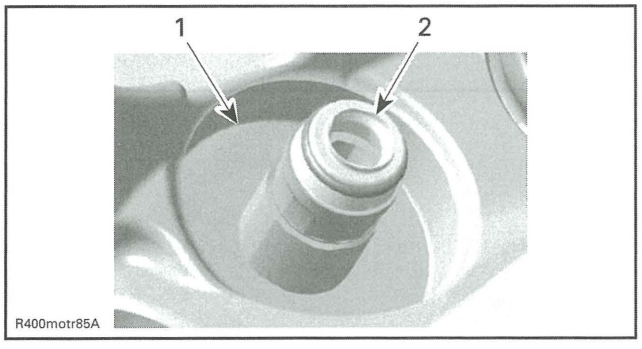

1. Thrust washer
2. Sealing lips of valve stem seal

To ease installation of cotters, apply oil or grease on them so that they remain in place while releasing the spring.

After spring is installed, ensure it is properly locked by tapping on valve stem end with a soft hammer so that valve opens and closes a few times.

NOTICE An improperly locked valve spring will cause engine damage.

VALVE GUIDES

Valve Guide Inspection

Always replace valve stem seals whenever valve guides are removed.

Measure valve guide in three places using a small bore gauge.

NOTE: Clean valve guide to remove carbon deposits before measuring.

Replace valve guide if it is out of specification or has other damages such as wear or friction surface.

VALVE GUIDE DIAMETER (INTAKE AND EXHAUST VALVES)	
NEW	4.998 mm to 5.018 mm (.1968 in to .1976 in)
SERVICE LIMIT	5.050 mm (.1988 in)

Valve Guide Removal

Refer to following procedures in this subsection to remove:
- Cylinder head
- Valves.

NOTE: Clean valve guide area from contamination before removal.

Drive the valve guide out of cylinder head.

REQUIRED TOOL	
Hammer	
VALVE GUIDE REMOVER 5 MM (P/N 529 035 924)	

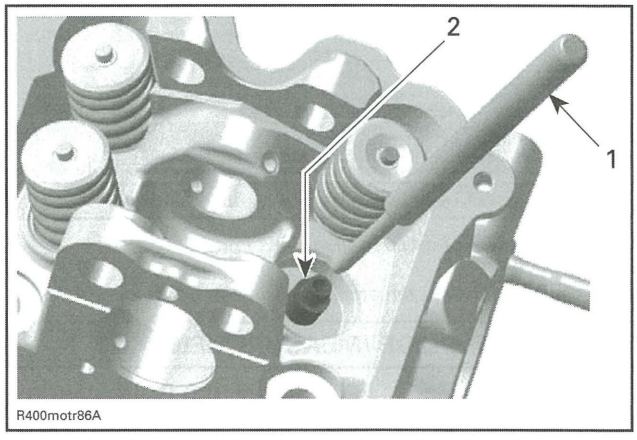

1. Valve guide remover
2. Valve guide

Valve Guide Installation

For installation, reverse the removal procedure. Pay attention to the following details.

Clean the valve guide bore before reinstalling the valve guide into cylinder head.

Install valve guide.

REQUIRED TOOL	
VALVE GUIDE INSTALLER (P/N 529 036 140)	

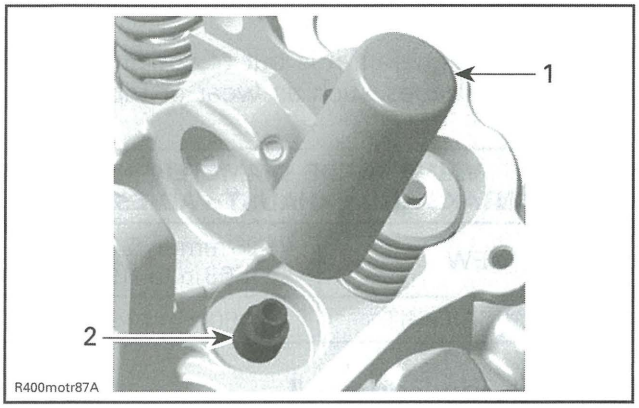

1. Valve guide installer
2. Valve guide

NOTE: Apply LOCTITE 767 (ANTISEIZE LUBRICANT) (P/N 293 800 070) on valve guide prior to install it into the cylinder head.

NOTICE **Push valve guide in the cold cylinder head as per following illustration.**

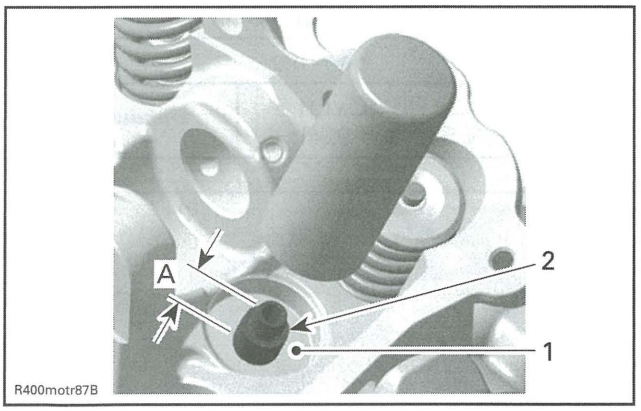

1. Thrust surface of cylinder head
2. Valve guide
A. Measurement from thrust surface to valve guide top

VALVE GUIDE (MEASUREMENT "A")	
NEW	14.00 mm to 14.40 mm (.5512 in to .5669 in)

Apply some lapping compound to valve face and work valve on its seat with a lapping tool.

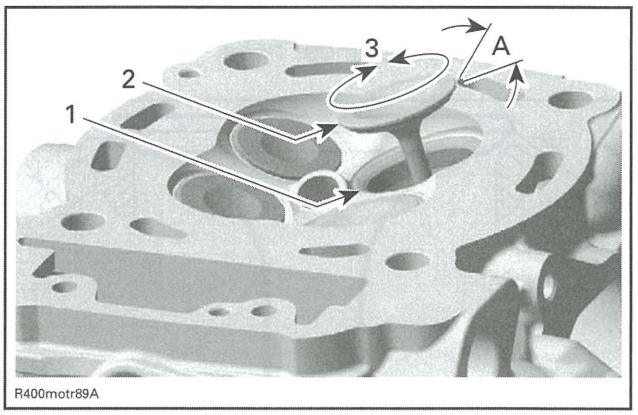

1. Valve seat
2. Valve face (contact surface to valve seat)
3. Turn valve while pushing against cylinder head
A. Valve seat angle 45°

NOTE: Ensure to seat valves properly. Apply marking paste to ease checking contact pattern.

Repeat procedure until valve seat/valve face fits together.

CYLINDER

Cylinder Removal

Refer to *TIMING CHAIN* subsection and remove the following parts:

- Timing chain tensioner
- Camshaft timing gear.

Remove the cylinder head (see *CYLINDER HEAD* in this subsection).

Pull cylinder.

Discard cylinder base gaskets.

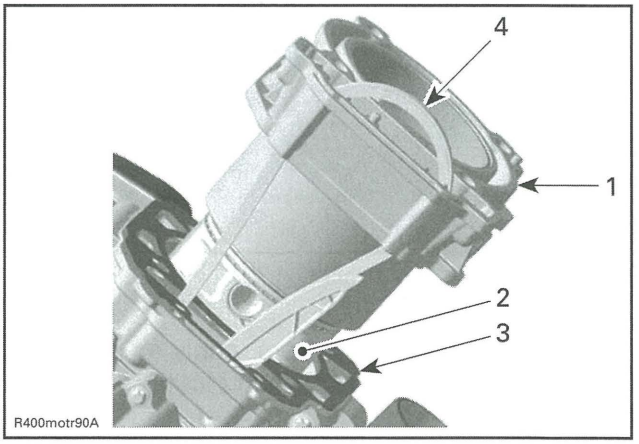

1. Cylinder
2. Piston assembly
3. Cylinder base gasket
4. Camshaft timing chain

Cylinder Inspection

Check cylinder for cracks, scoring and wear ridges on the top and bottom of the cylinder. If so, replace cylinder.

Cylinder Taper

Measure cylinder bore at 3 recommended positions.

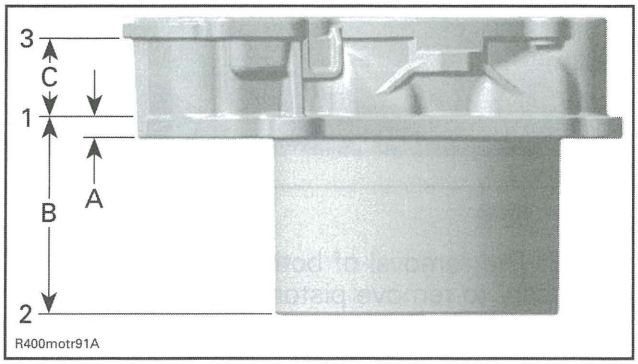

A. First measurement (from cylinder bottom)
B. Second measurement
C. Third measurement

CYLINDER TAPER MEASUREMENTS		
ENGINE	MEASUREMENT	SPECIFICATION
800R engine	A	5 mm (.197 in)
	B	63 mm (2.48 in)
	C	32 mm (1.26 in)
1000 engine	A	5 mm (.197 in)
	B	58 mm (2.283 in)
	C	52 mm (2.047 in)

CYLINDER TAPER SPECIFICATION	
NEW (MAXIMUM)	0.038 mm (.0015 in)
SERVICE LIMIT	0.090 mm (.0035 in)

Distance between measurements should not exceed the service limit mentioned above. Otherwise, replace cylinder and piston rings.

Cylinder Out of Round

Measure cylinder diameter in piston axis direction from top of cylinder. Take another measurement 90° from first one and compare.

NOTE: Take the same measuring points like described in *CYLINDER TAPER* above.

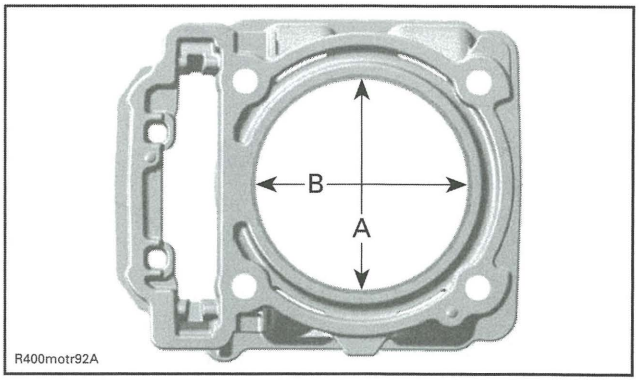

A. Perpendicular to crankshaft axis
B. Parallel to crankshaft axis

CYLINDER OUT OF ROUND	
NEW (MAXIMUM)	0.015 mm (.0006 in)
SERVICE LIMIT	0.020 mm (.0008 in)

Cylinder Installation

For installation, reverse the removal procedure. Pay attention to the following details.

NOTICE Always replace cylinder base gasket before installing the cylinder.

NOTE: Make sure piston rings are properly spaced, refer to *PISTON RINGS* in this subsection.

Apply engine oil:
- In the bottom area of the cylinder bore
- On the piston rings
- On the compressor tool.

Compress piston rings.

REQUIRED TOOL	
PISTON RING COMPRESSOR (P/N 529 035 919)	

First mount cylinder 2.

NOTE: The cylinder can not be pushed fully over the piston unless the piston is located at TDC.

Then remove the CRANKSHAFT LOCKING BOLT (P/N 529 035 617).

Crank the engine further and position piston 1 at TDC.

Mount cylinder 1.

Put timing chain through the chain pit then put the cylinder in place.

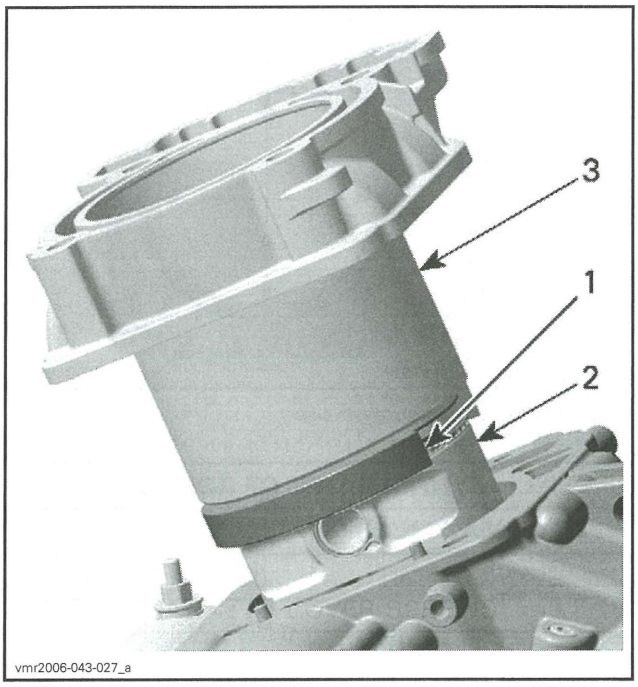

1. Piston ring compressor tool
2. Piston
3. Cylinder

NOTICE Chain guide has to be fixed between cylinder and cylinder head.

NOTE: After both cylinders are installed, turn crankshaft until piston of cylinder 2 is at TDC and lock crankshaft. Refer to *CRANKSHAFT* in the *BOTTOM END* subsection.

Install cylinder head and the other parts in accordance with the proper installation procedures.

PISTON

Piston Removal

Refer to following procedures in this subsection to remove:
- Cylinder head
- Cylinder.

Place a rag under piston and in the area of timing chain compartment.

⚠ WARNING
Piston circlips are spring loaded.

Remove one piston circlip and discard it.

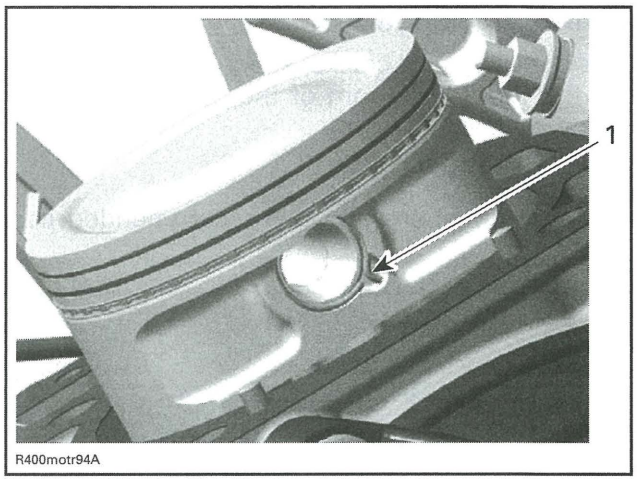

1. Piston circlip

NOTE: The removal of both piston circlips is not necessary to remove piston pin.

Push piston pin out of piston.

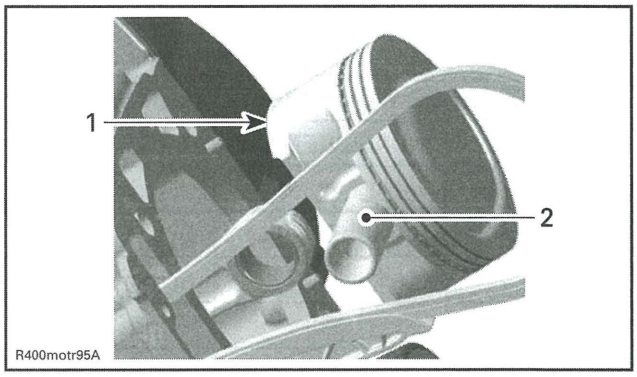

1. Piston
2. Piston pin

Detach piston from connecting rod.

Piston Inspection

Inspect piston for scoring, cracking or other damages. Replace piston and piston rings if necessary.

Using a micrometer, measure piston at 8 mm (.315 in) perpendicularly (90°) to piston pin.

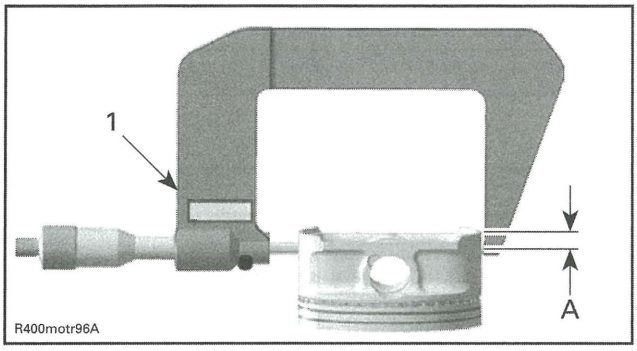

1. Measuring perpendicularly (90°) to piston pin
A. 8 mm (.315 in)

The measured dimension should be as described in the following tables. If not, replace piston.

PISTON MEASUREMENT	
NEW	90.950 mm to 90.966 mm (3.5807 in to 3.5813 in)
SERVICE LIMIT	90.850 mm (3.577 in)

Piston/Cylinder Clearance

Adjust and lock a micrometer to the piston dimension.

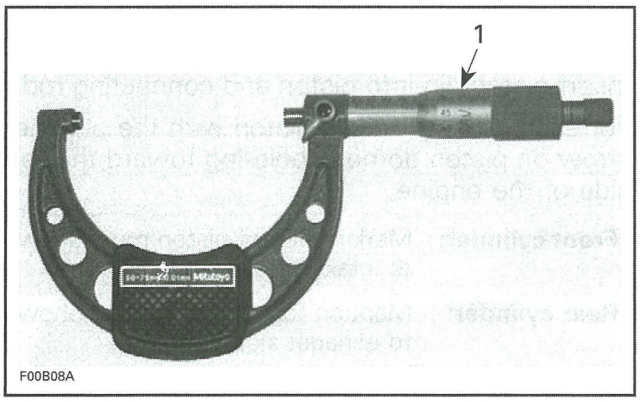

1. Micrometer set to the piston dimension

With the micrometer set to the dimension, adjust a cylinder bore gauge to the micrometer dimension and set the indicator to 0 (zero).

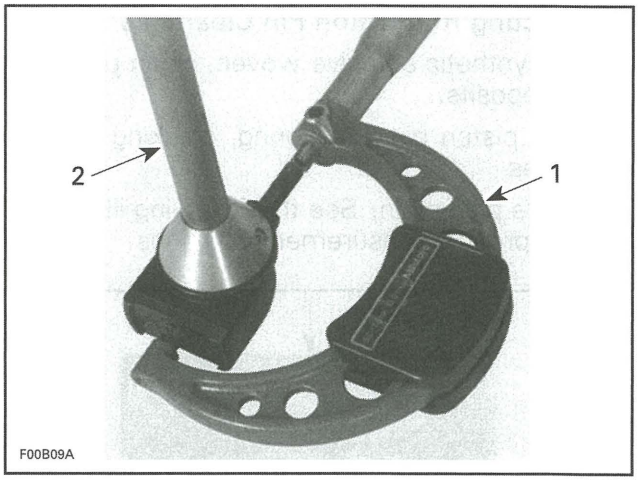

1. Use the micrometer to set the cylinder bore gauge
2. Dial bore gauge

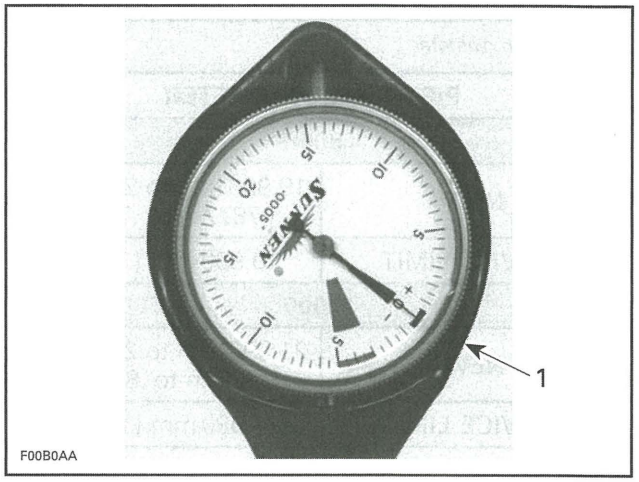

TYPICAL
1. Indicator set to 0 (zero)

Position the dial bore gauge 20 mm (.787 in) above cylinder base, measuring perpendicularly (90°) to piston pin axis.

Read the measurement on the cylinder bore gauge. The result is the exact piston/cylinder wall clearance.

PISTON/CYLINDER CLEARANCE	
NEW	0.027 mm to 0.057 mm (.0011 in to .0022 in)
SERVICE LIMIT	0.100 mm (.0039 in)

NOTE: Make sure used piston is not worn.

If clearance exceeds specified tolerance, replace piston by a new one and measure piston/cylinder clearance again.

NOTE: Make sure the cylinder bore gauge indicator is set exactly at the same position as with the micrometer, otherwise the reading will be false.

Connecting Rod/Piston Pin Clearance

Using synthetic abrasive woven, clean piston pin from deposits.

Inspect piston pin for scoring, cracking or other damages.

Measure piston pin. See the following illustration for the proper measurement positions.

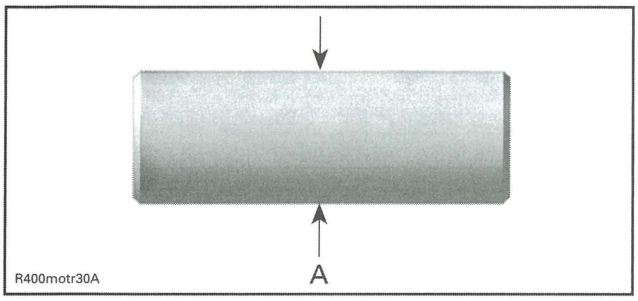

A. Piston pin diameter

PISTON PIN DIAMETER	
800R	
NEW	19.996 mm to 20.000 mm (.7872 in to .7874 in)
SERVICE LIMIT	19.980 mm (.7866 in)
1000	
NEW	21.996 mm to 22.000 mm (.866 in to .8661 in)
SERVICE LIMIT	21.980 mm (.8654 in)

Replace piston pin if diameter is out of specifications.

Measure inside diameter of connecting rod small end bushing.

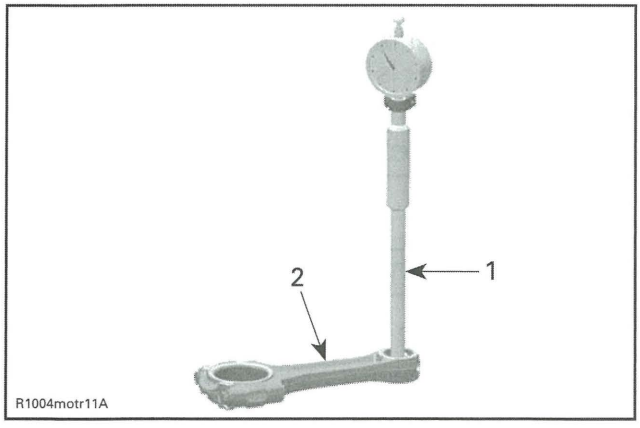

1. Bore gauge
2. Connecting rod

CONNECTING ROD SMALL END DIAMETER	
800R	
NEW	20.010 mm to 20.020 mm (.7878 in to .7882 in)
SERVICE LIMIT	20.060 mm (.7898 in)
1000	
NEW	20.010 mm to 20.020 mm (.7878 in to .7882 in)
SERVICE LIMIT	20.050 mm (.7894 in)

Replace connecting rod if diameter of connecting rod small end is out of specifications. Refer to *BOTTOM END* subsection for removal procedure.

Compare measurements to obtain the connecting rod/piston pin clearance.

CONNECTING ROD/ PISTON PIN CLEARANCE	
SERVICE LIMIT	0.080 mm (.0031 in)

Piston Installation

For installation, reverse the removal procedure. Pay attention to the following details.

Apply engine oil on the piston pin.

Insert piston pin into piston and connecting rod.

For each cylinder, install piston with the punched arrow on piston dome is pointing toward the rear side of the engine.

Front cylinder: Mark on top of piston must show to intake side.

Rear cylinder: Mark on top of piston must show to exhaust side.

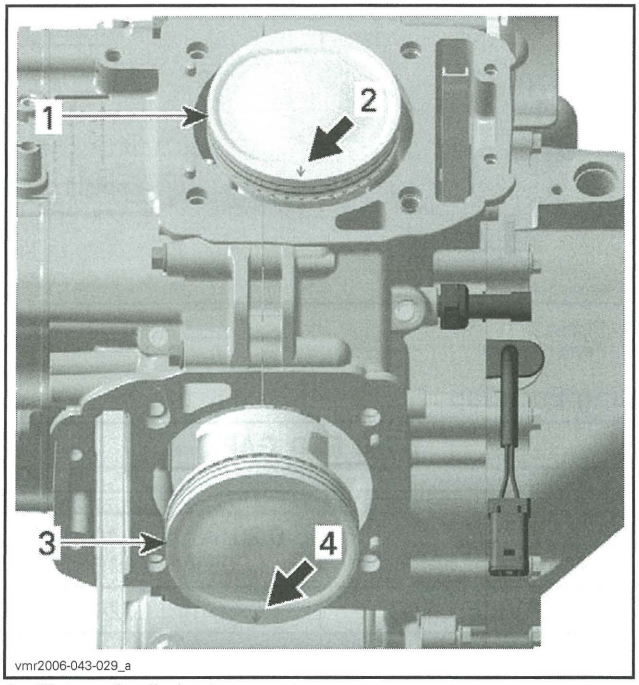

1. *Piston of cylinder 1*
2. *Mark on piston must show to intake side of cylinder 1*
3. *Piston of cylinder 2*
4. *Mark on piston must show to exhaust side of cylinder 2*

Use the piston appropriate circlip installer to assemble the NEW piston circlip as per following procedure:

ENGINE TYPE	TOOL
800R	PISTON CIRCLIP INSTALLER (P/N 529 035 921)
1000	PISTON CIRCLIP INSTALLER (P/N 529 036 153)

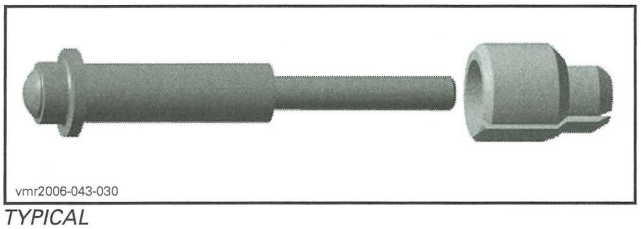

TYPICAL

NOTICE Always replace disassembled piston circlip(s) by NEW ones. Place a rag on cylinder base to avoid dropping the circlip inside the engine.

Place circlip in sleeve as per following illustration.

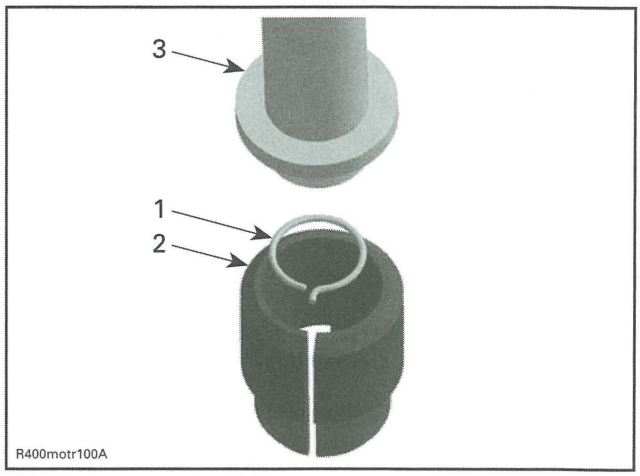

1. *Circlip*
2. *Sleeve*
3. *Assembly jig from piston clip installer*

Push taper side of assembly jig until circlip reaches middle of sleeve.

Align sleeve with piston pin axis and push assembly jig until circlip engages in piston.

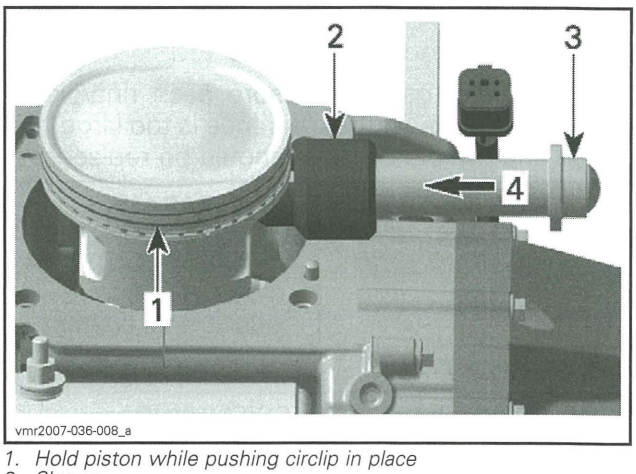

1. *Hold piston while pushing circlip in place*
2. *Sleeve*
3. *Assembly jig*
4. *Direction to push circlip*

NOTE: Take care that the hook of the piston circlip is positioned properly.

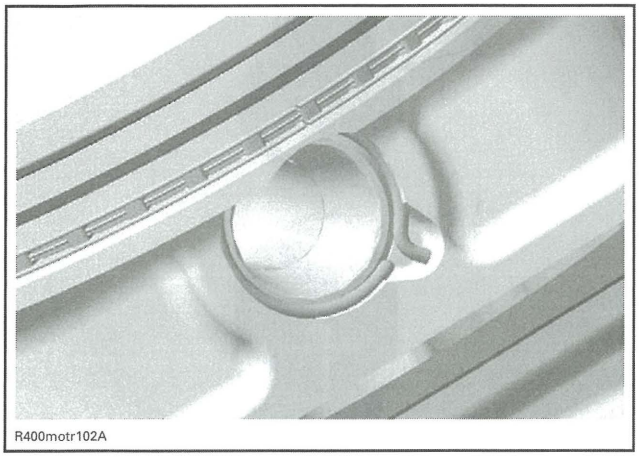
R400motr102A

CORRECT POSITION OF THE PISTON CIRCLIP

PISTON RINGS

Ring Removal

Remove the piston (see *PISTON* in this subsection).

Ring Inspection

Ring/Piston Groove Clearance

Using a feeler gauge measure each ring/piston groove clearance. If the clearance is too large, the piston and the piston rings should be replaced.

RING/PISTON GROOVE CLEARANCE	
UPPER COMPRESSION RING	
NEW	0.03 mm to 0.07 mm (.0012 in to .0028 in)
SERVICE LIMIT	0.150 mm (.0059 in)
LOWER COMPRESSION RING	
NEW	0.02 mm to 0.06 mm (.0008 in to .0024 in)
SERVICE LIMIT	0.150 mm (.0059 in)
OIL SCRAPER RING	
NEW	0.01 mm to 0.18 mm (.0004 in to .0071 in)
SERVICE LIMIT	0.250 mm (.0098 in)

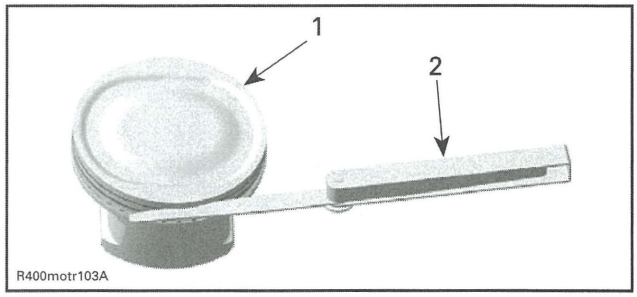

R400motr103A

1. Piston
2. Feeler gauge

Ring End Gap

RING END GAP	
UPPER COMPRESSION RING	
NEW	0.20 mm to 0.40 mm (.008 in to .016 in)
SERVICE LIMIT	0.60 mm (.024 in)
LOWER COMPRESSION RING	
NEW	0.20 mm to 0.40 mm (.008 in to .016 in)
SERVICE LIMIT	0.70 mm (.028 in)
OIL SCRAPER RING	
NEW	0.20 mm to 0.70 mm (.008 in to .028 in)
SERVICE LIMIT	1.00 mm (.039 in)

To measure the ring end gap place the ring in the cylinder in the area of 8 mm to 16 mm (5/16 in to 5/8 in) from top of cylinder.

NOTE: In order to correctly position the ring in the cylinder, use piston as a pusher.

Using a feeler gauge, check ring end gap. Replace ring if gap exceeds above described specified tolerance.

Ring Installation

For installation, reverse the removal procedure. Pay attention to the following details.

NOTE: Use a ring expander to prevent breakage during installation. The oil ring must be installed by hand.

NOTE: First install spring and then rings of oil scraper ring.

Install the oil scraper ring first, then the lower compression ring with the word "N and TOP " facing up, then the upper compression ring with the word "N and TOP" facing up.

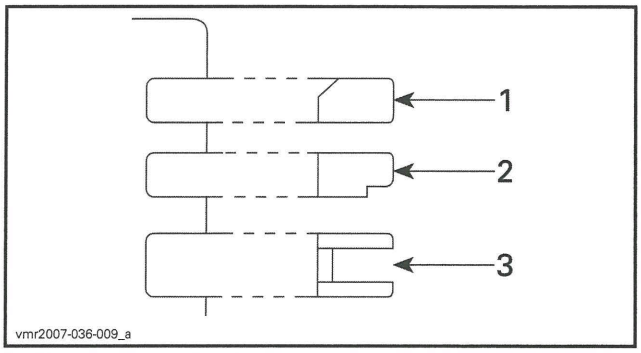

1. Upper compression ring
2. Lower compression ring
3. Oil scraper ring

NOTICE Ensure that top and second rings are not interchanged.

Check that rings rotate smoothly after installation.

Space the piston ring end gaps 120° apart and do not align the gaps with the piston pin bore or the thrust side axis.

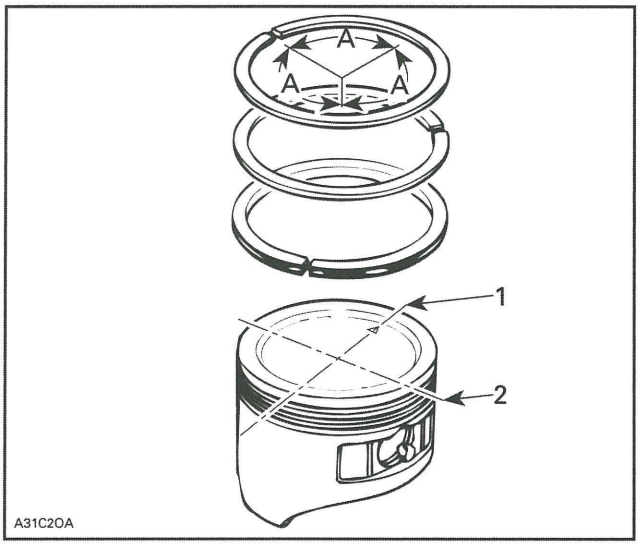

1. DO NOT align ring gap with piston thrust side axis
2. DO NOT align ring gap with piston pin bore axis
A. 120°

TIMING CHAIN

SERVICE TOOLS

Description	Part Number	Page
CAMSHAFT TIMING TOOL	529 036 231	129–130
CRANKSHAFT TDC POSITION TOOL	529 036 201	133

SERVICE PRODUCTS

Description	Part Number	Page
LOCTITE 243 (BLUE)	293 800 060	130, 135

TIMING CHAIN

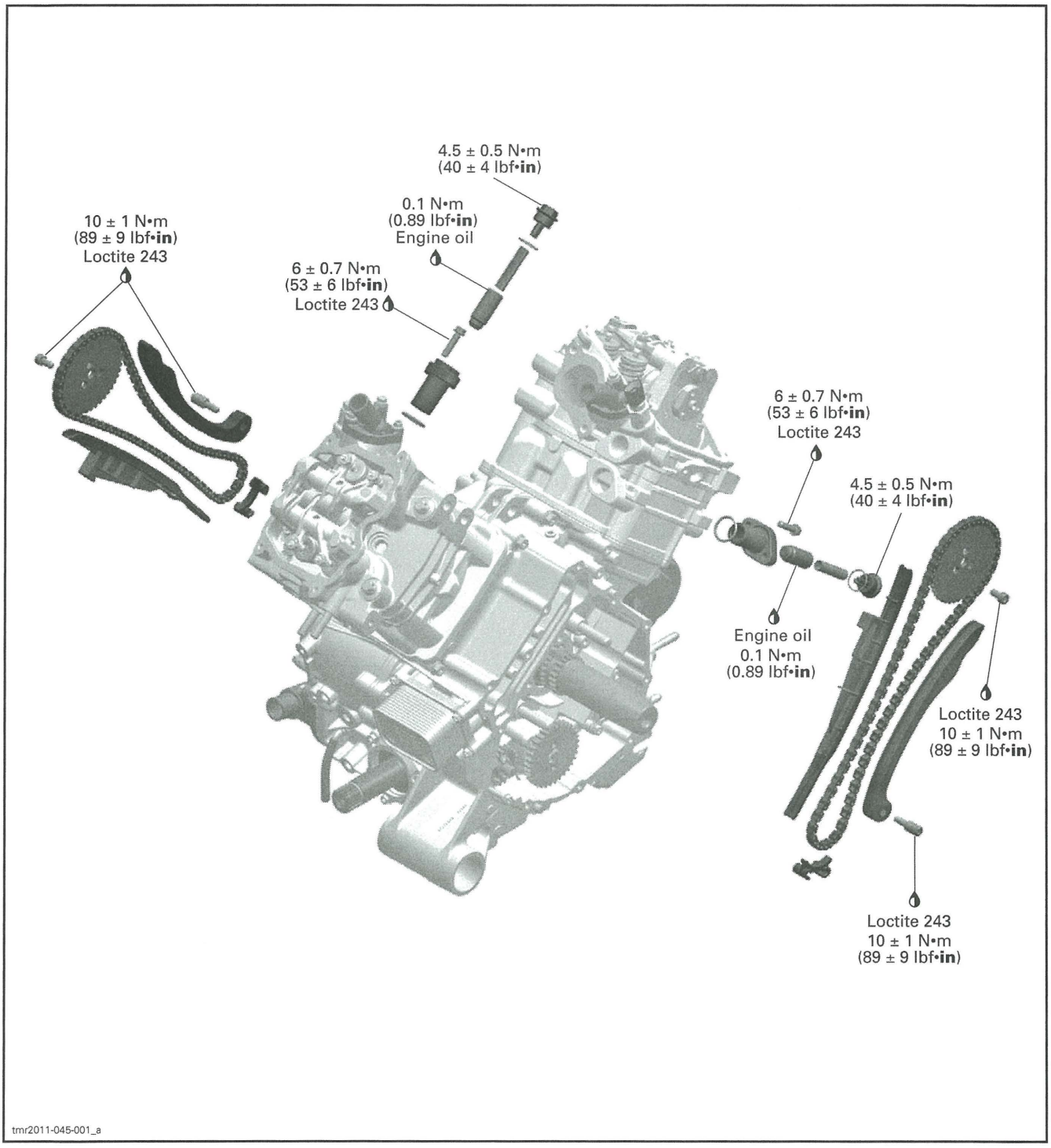

GENERAL

IMPORTANT: Note position of parts on disassembly. This may help to find the root cause of a problem. A component that is not replaced should be reinstalled in the same position as originally mounted.

TROUBLESHOOTING

UNUSUAL ENGINE NOISE OR VIBRATION

1. IMPROPER VALVE CLEARANCE ADJUSTMENT AND/OR WORN OUT ROCKER ARM(S)
   - *Readjust valve clearance and/or replace defective part(s), refer to TOP END subsection.*
2. DEFECTIVE CHAIN TENSIONER
   - *Replace chain tensioner.*
3. WORN OUT TIMING CHAIN GUIDE(S)
   - *Replace timing chain guide(s).*
4. STRETCHED TIMING CHAIN OR WORN OUT TIMING GEARS
   - *Replace timing chain and timing gears.*
5. LOOSE TIMING GEAR RETAINING SCREWS
   - *Retighten screws to recommended torque.*
6. INCORRECT CAMSHAFT TIMING
   - *Replace damaged components and readjust camshaft timing.*

ENGINE LACKS ACCELERATION OR POWER

1. INCORRECT CAMSHAFT TIMING
   - *Replace damaged components and readjust camshaft timing.*

PROCEDURES

TIMING CHAIN TENSIONERS

Timing Chain Tensioner Location

800R Engine

The timing chain tensioner is located in the cylinder head.

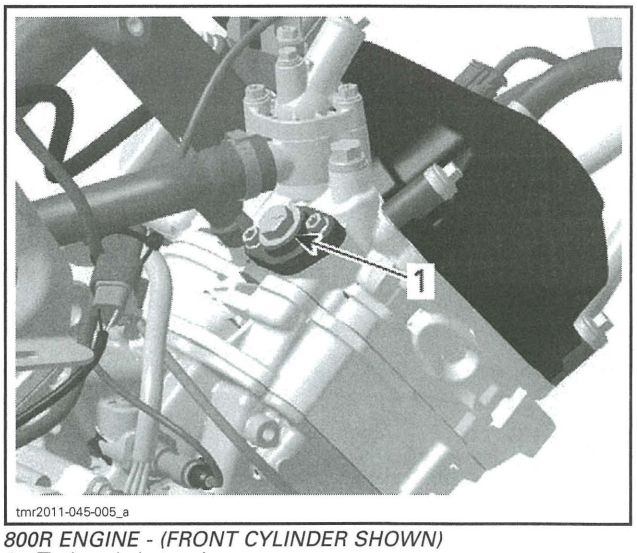

800R ENGINE - (FRONT CYLINDER SHOWN)
1. Timing chain tensioner

1000 Engine

The timing chain tensioner is located in the cylinder.

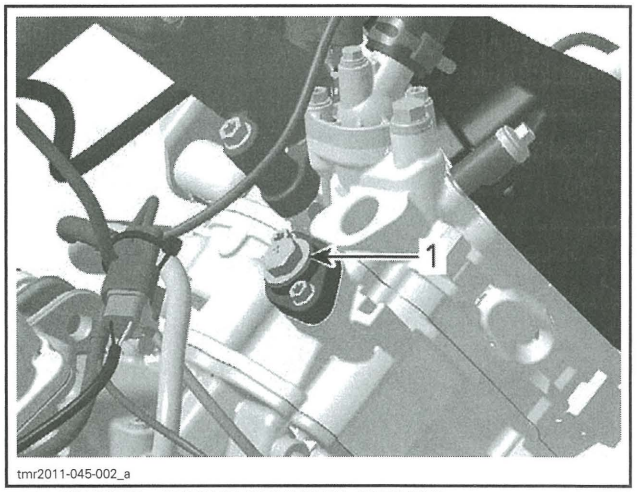

1000 ENGINE - (FRONT CYLINDER SHOWN)
1. Timing chain tensioner

Timing Chain Tensioner Removal

1. Make sure the respective cylinder is set to TDC ignition. Refer to *CAMSHAFT TIMING GEARS* in this subsection.
2. Carefully unscrew chain tensioner plug and release spring tension.

⚠ CAUTION Tensioner is spring loaded.

3. Remove:
   - O-ring
   - Spring
   - Chain tensioner plunger.

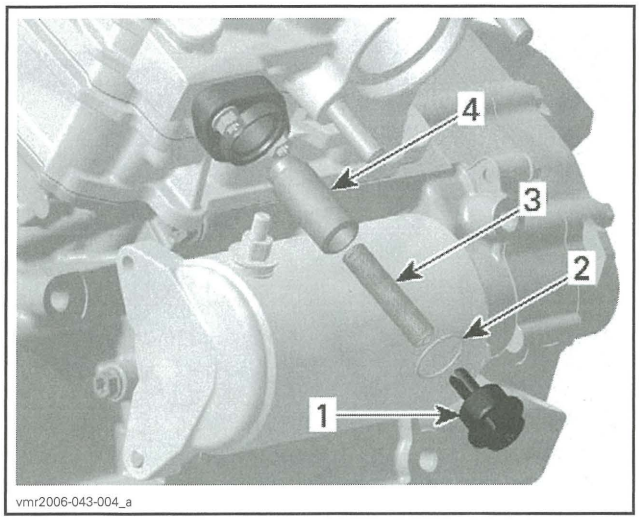

1. *Chain tensioner plug*
2. *O-ring*
3. *Spring*
4. *Chain tensioner plunger*

4. Remove:
   - Chain tensioner housing retaining screws
   - Chain tensioner housing
   - O-ring.

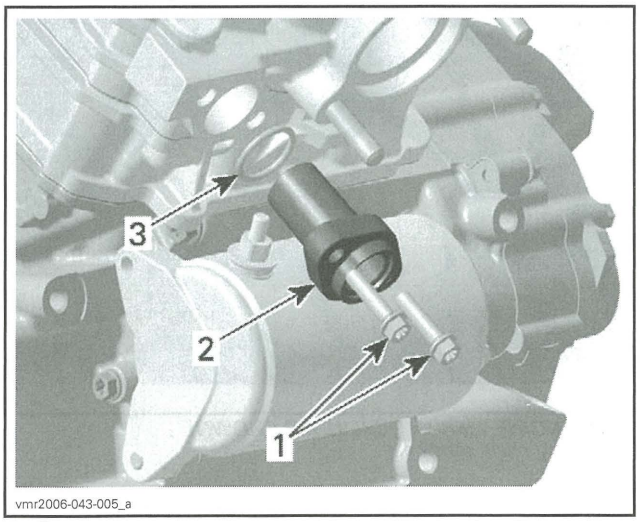

1. *Screws*
2. *Chain tensioner housing*
3. *O-ring*

Timing Chain Tensioner Inspection

Check the chain tensioner housing and plug for cracks or other damages. Replace if necessary.

Check chain tensioner plunger for free movement and/or scoring.

Check if O-rings are brittle, cracked or hard. Replace if necessary.

Check spring condition. Replace if bent, broken or worn.

Timing Chain Tensioner Installation

1. For installation, reverse the removal procedure. However, pay attention to the following.

NOTE: Before installing the chain tensioner make sure, that the camshaft timing gear can be moved back and forth.

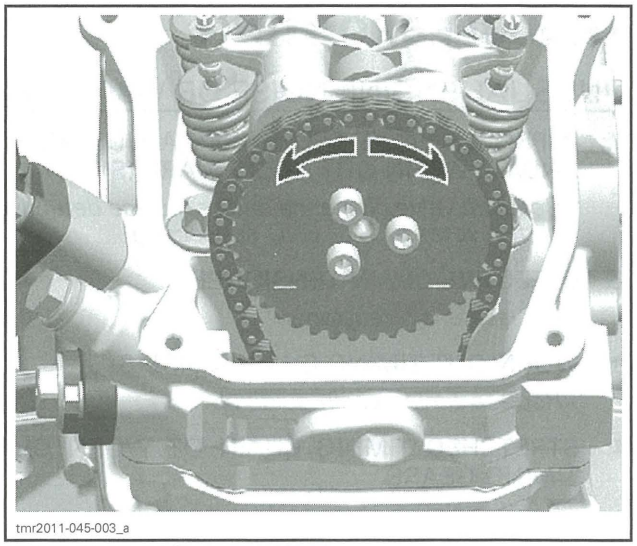

MOVE GEAR BACK AND FORTH

2. Apply engine oil on the plunger before installation.
3. Slightly turn the camshaft timing gear in order to get the timing chain play on the tensioner side.
4. Slightly screw the plunger in until the timing chain allows no more back and forth movement of the camshaft timing gear.
5. Screw the plunger in an additional 1/8 turn to reach the required specified torque.

TIMING CHAIN TENSIONER ADJUSTMENT (TORQUE)
0.1 N•m (.9 lbf•**in**)

NOTICE **Improper adjustment of the timing chain will lead to severe engine damage.**

6. Fit the spring on one side into the slot of the plug and on the other side into the plunger.

NOTE: Turn spring only clockwise in order to fit the spring end into the notch of the plunger to avoid loosening the plunger during spring installation. Do not preload the spring.

NOTE: Do not forget to place the O-ring on chain tensioner plug.

7. Then compress the spring and screw the plug in.

NOTE: To avoid overstressed timing chain, the plug must engage into threads within the first full turn.

8. Remove locking tool and install all other removed parts.
9. Finally, tighten the plug.

CAMSHAFT TIMING GEARS

Camshaft Timing Gear Removal

Remove the valve cover, refer to *TOP END* subsection.

Turn crankshaft to TDC ignition of the respective cylinder and lock magneto flywheel, see *CAMSHAFT TIMING* in this subsection.

Unscrew timing chain tensioner. Refer to *TIMING CHAIN TENSIONERS* in this subsection.

Remove camshaft timing gear retaining screws.

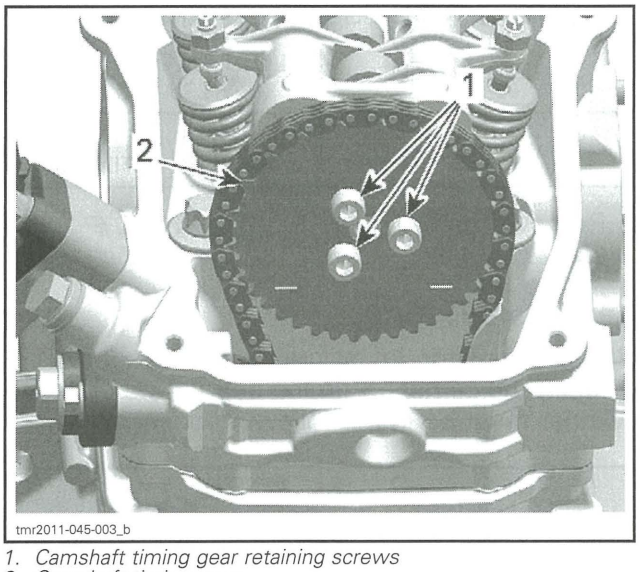

1. Camshaft timing gear retaining screws
2. Camshaft timing gear

Remove the camshaft timing gear.

NOTE: Secure timing chain with a piece of wire.

Camshaft Timing Gear Inspection

Check camshaft timing gear for wear or deterioration.

If gear is worn or damaged, replace it as a set with the timing chain.

For crankshaft gear, refer to *BOTTOM END* subsection, see *CRANKSHAFT*.

Camshaft Timing Gear Installation

For installation, reverse the removal procedure. Pay attention to the following details.

1. Clean mating surface and threads of camshaft prior installing camshaft timing gear.

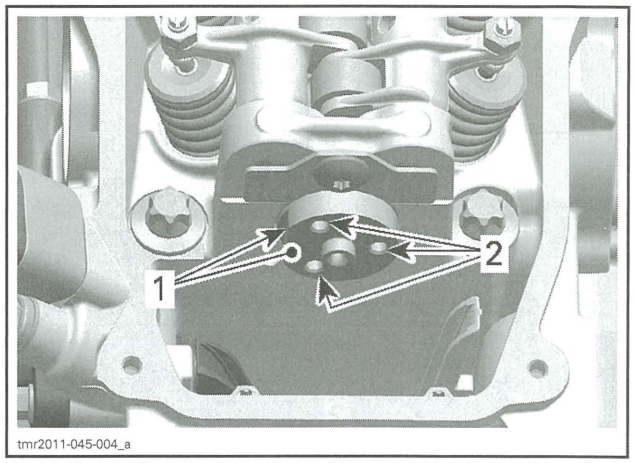

1. Mating surface on camshaft
2. Threads for camshaft screws

2. Crankshaft must be set to TDC ignition position before installing the timing chain, refer to *CAMSHAFT TIMING* in this subsection.
3. Install the camshaft timing tool on the cylinder head.

REQUIRED TOOL	
CAMSHAFT TIMING TOOL (P/N 529 036 231)	

NOTE: Align tube of camshaft adjustment tool properly with machined radius on cylinder head.

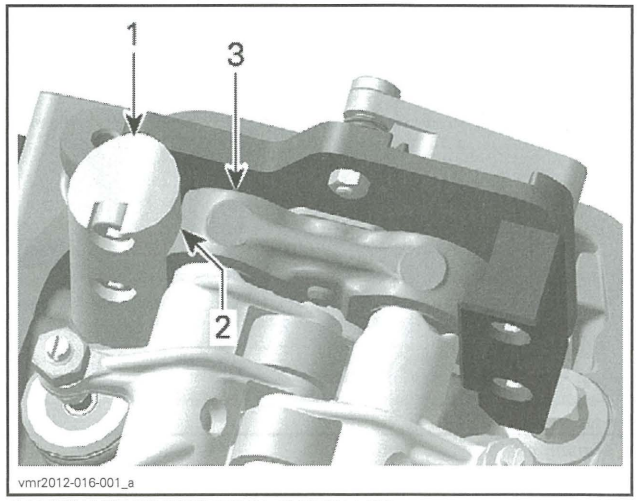

CAMSHAFT TIMING TOOL INSTALLED
1. Tube (camshaft adjustment tool)
2. Machined radius (camshaft adjustment tool)
3. Cylinder head

4. Set camshaft to TDC ignition position by aligning the camshaft flange flat spot with the tool lever.

NOTE: In addition, to ensure proper camshaft timing, press camshaft adjustment tool lever downwards.

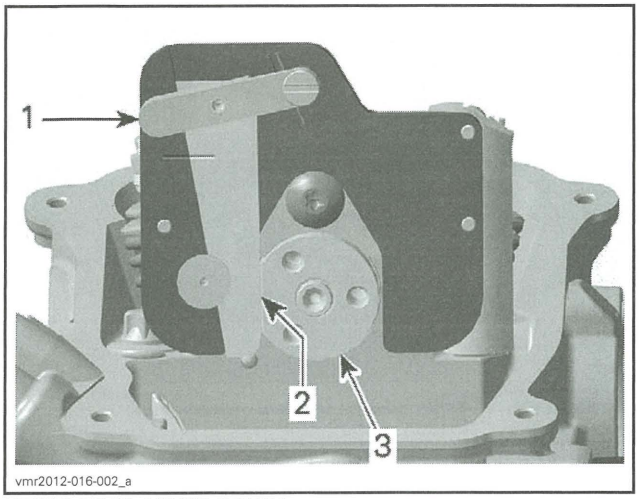

PRESS TOOL LEVER DOWN
1. *Lever*
2. *Flat spot*
3. *Camshaft*

NOTICE **Crankshaft and camshaft must be locked at TDC ignition position to place camshaft timing gear and timing chain in the proper position.**

5. Place camshaft timing gear along with the timing chain on the camshaft.

NOTE: The printed marks on the camshaft timing gear must be parallel to the cylinder head base.

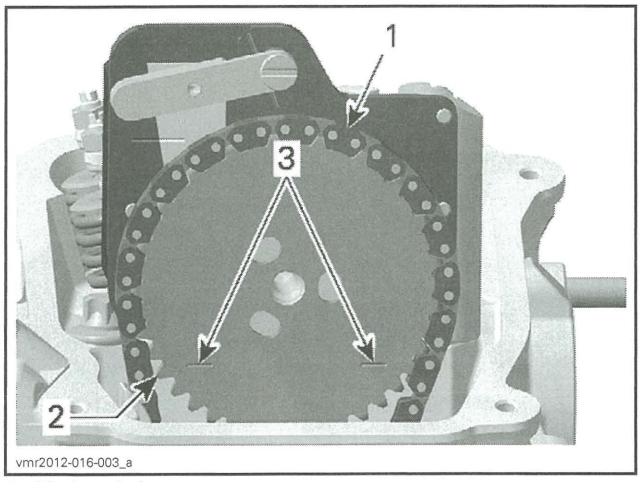

1. *Timing chain*
2. *Camshaft timing gear*
3. *Printed marks on camshaft timing gear*

6. Install and adjust timing chain tensioner, refer to *TIMING CHAIN TENSIONER* in this subsection.

7. Install and tighten camshaft timing gear retaining screws to specified torque.

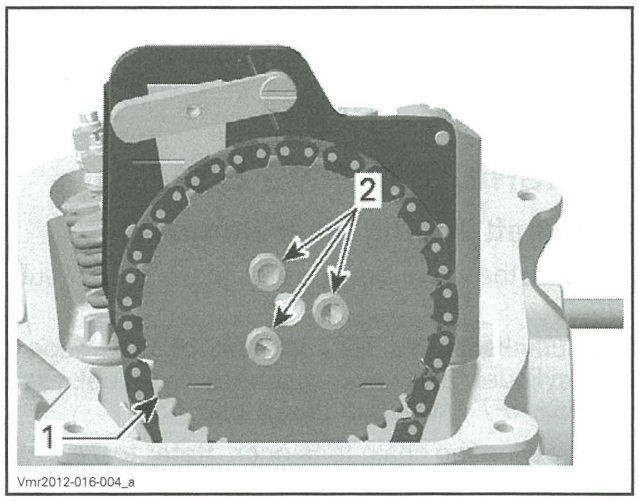

1. *Camshaft timing gear*
2. *Timing gear retaining screws*

CAMSHAFT TIMING GEAR RETAINING SCREWS	
Service product	LOCTITE 243 (BLUE) (P/N 293 800 060)
Tightening torque	10 N•m ± 1 N•m (89 lbf•**in** ± 9 lbf•**in**)

8. Remove the CAMSHAFT TIMING TOOL (P/N 529 036 231).

Camshaft Timing

NOTE: If a piston (of cylinder 1 or 2) is set to TDC ignition, the camshaft timing gear of the opposite cylinder must be in the following position.

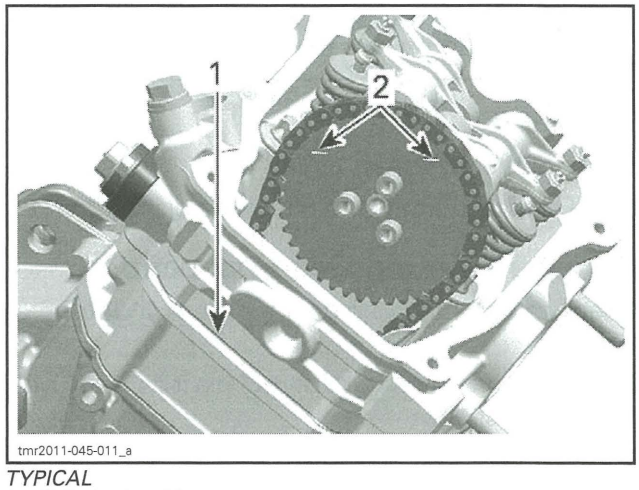

TYPICAL
1. *Cylinder head base*
2. *Marks on timing gear of the opposite cylinder*

Camshaft Timing Piston No. 2 (rear)

1. Remove spark plugs of both cylinders.

2. Remove valve covers of both cylinders.
3. Remove the plug and O-ring of magneto cover.

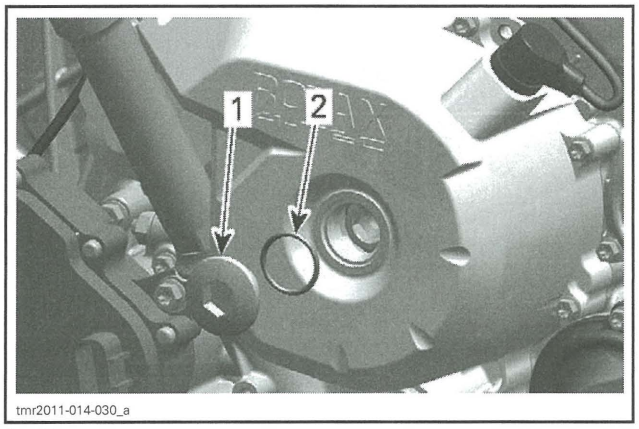

1. Plug
2. O-ring

4. Remove the crankshaft position sensor (CPS).

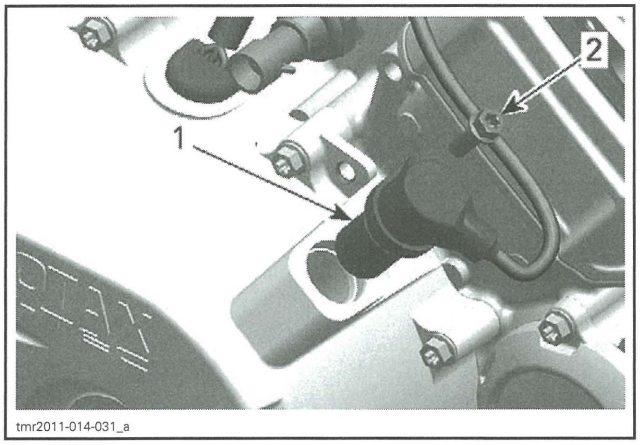

1. CPS
2. Screw

5. Set piston no. 2 to TDC ignition by turning the crankshaft.

REQUIRED TOOL
Allen key 14 mm

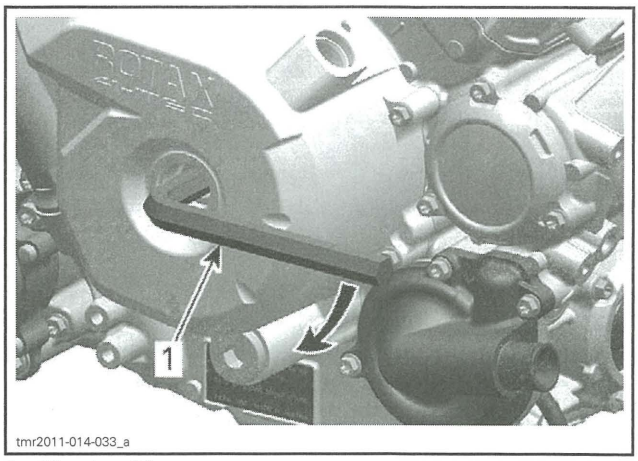

1. Allen key 14 mm

5.1 The rear piston is at TDC when it's index mark on the magneto flywheel is aligned with notch in the magneto cover.

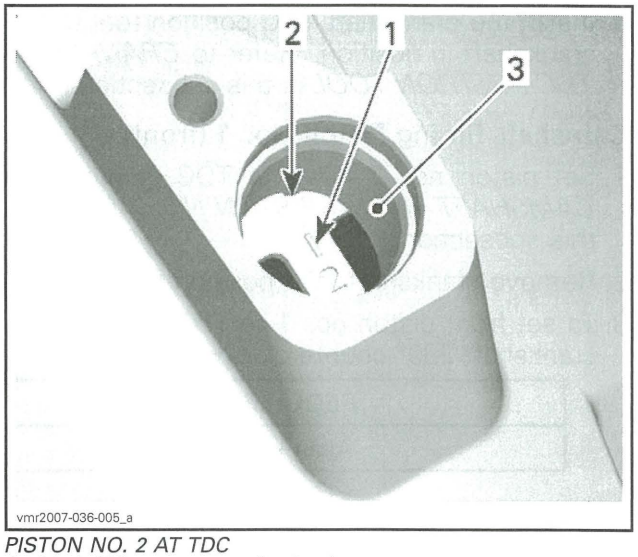

PISTON NO. 2 AT TDC
1. Mark "2" on magneto flywheel
2. Notch on magneto cover
3. Crankshaft position sensor location

5.2 Confirm printed marks on the camshaft timing gear are parallel to cylinder head base, in the lower position.

NOTE: If printed marks on camshaft timing gear are not as specified, turn crankshaft 360°.

NOTE: In this position the piston is set to TDC ignition.

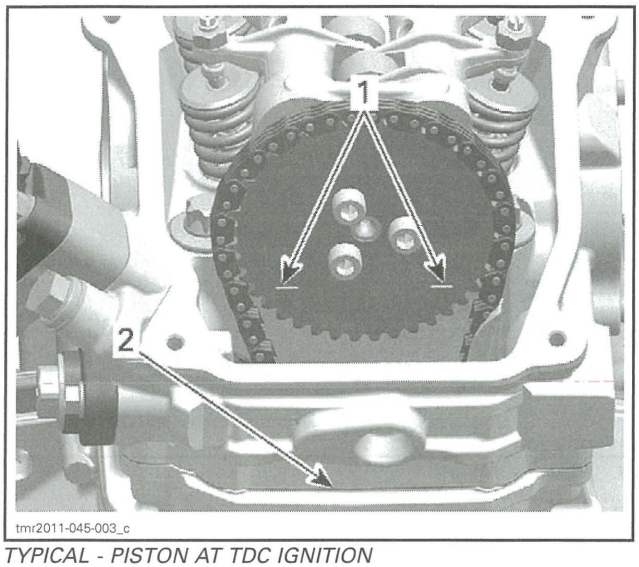

TYPICAL - PISTON AT TDC IGNITION
1. *Printed marks on camshaft timing gear*
2. *Cylinder head base*

6. Install the crankshaft TDC position tool to lock crankshaft in position. Refer to *CRANKSHAFT TDC POSITION TOOL* in this subsection.

Camshaft Timing Piston No. 1 (front)

1. Set piston no. 2 (rear) to TDC ignition, see *CAMSHAFT TIMING PISTON NO. 2 (REAR)* in this subsection.
2. Remove crankshaft TDC position tool.
3. To set front piston no. 1 to **TDC ignition** turn crankshaft 280° counterclockwise.

REQUIRED TOOL
Allen key 14 mm

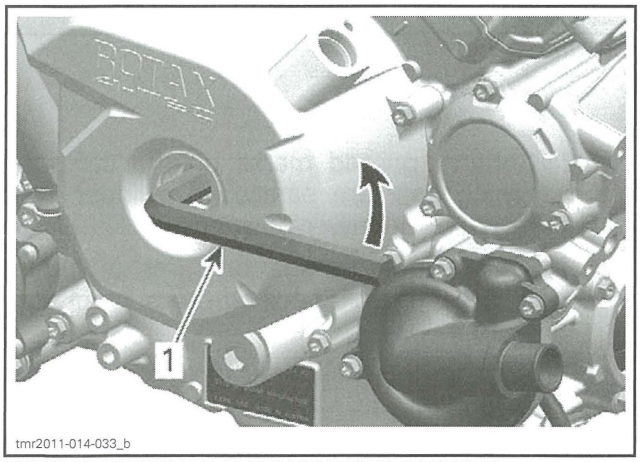

TURN CRANKSHAFT 280° COUNTERCLOCKWISE
1. *Allen key 14 mm*

3.1 The front piston is at TDC when it's index mark on the magneto flywheel is aligned with the notch in the magneto cover.

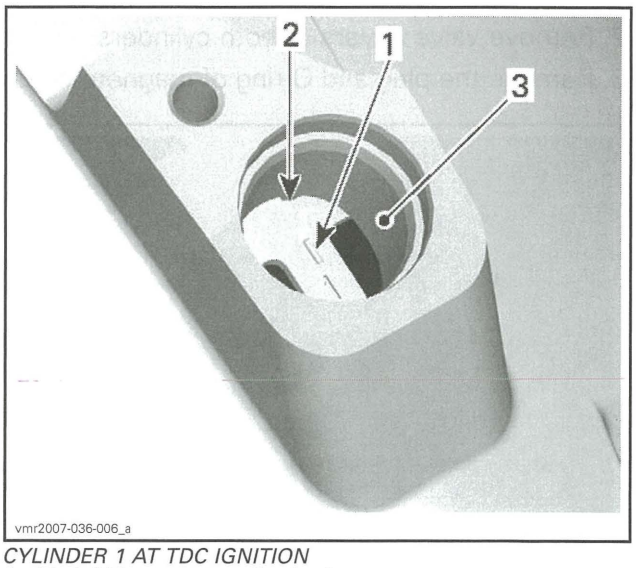

CYLINDER 1 AT TDC IGNITION
1. *Mark "1" on magneto flywheel*
2. *Notch on magneto cover*
3. *Location of crankshaft position sensor*

3.2 Confirm printed marks on the camshaft timing gear are parallel with cylinder head base, in the lowest position.

NOTE: In this position the piston is set to TDC ignition.

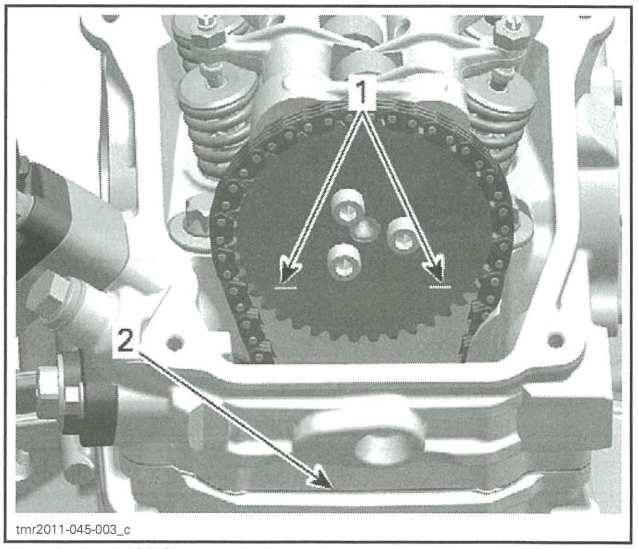

TYPICAL - PISTON AT TDC IGNITION
1. *Printed marks on camshaft timing gear*
2. *Cylinder head base*

Crankshaft TDC Position Tool Installation

Install tool in magneto cover CPS bore.

REQUIRED TOOL	
CRANKSHAFT TDC POSITION TOOL (P/N 529 036 201)	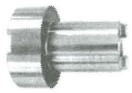

NOTE: Make sure to match the teeth on the crankshaft TDC position tool with the magneto rotor.

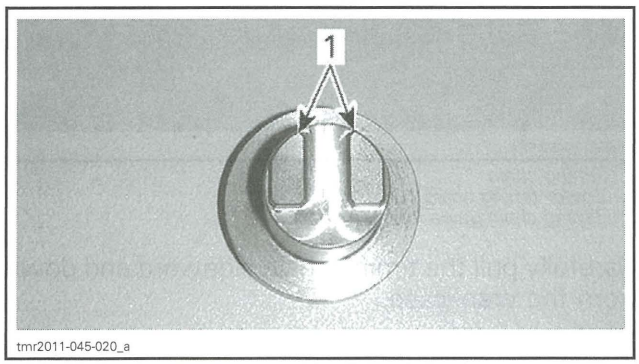

1. Crankshaft TDC position tool teeth (end view)

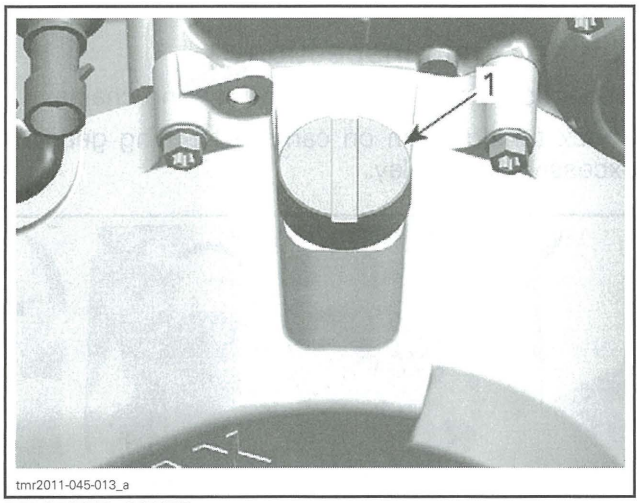

MAGNETO COVER
1. Crankshaft TDC position tool installed in CPS bore

NOTICE **Tool must be fully inserted.**

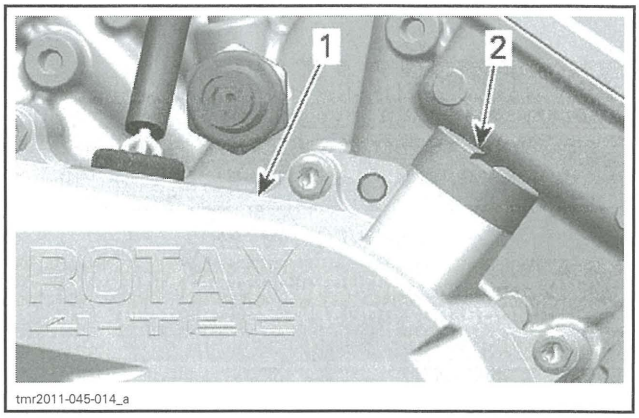

1. Magneto cover
2. TDC position tool

TIMING CHAIN

The engine is equipped with two timing chains.
- MAG side timing chain is located behind the magneto cover.
- PTO side timing chain is located behind the PTO cover.

Timing Chain Removal (MAG Side)

Refer to *MAGNETO SYSTEM* subsection and remove following parts:
- Magneto cover
- Rotor
- Sprag clutch gear.

Refer to *TOP END* subsection and remove following parts:
- Valve cover.

Refer to following procedures in this subsection and remove following parts:
- Chain tensioner
- Camshaft timing gear.

Remove timing chain guide (tensioner side) and lower timing chain guide.

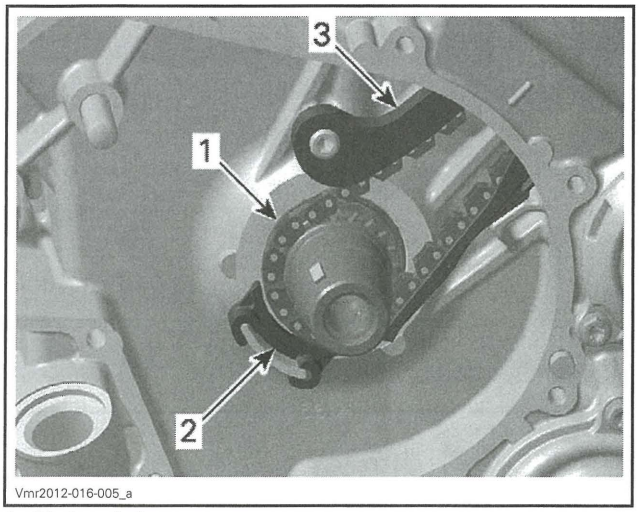

1. Timing chain
2. Lower timing chain guide
3. Timing chain guide (tensioner side)

NOTE: Mark the operating direction of the timing chain and check for excessive radial play before removal. Refer to *TIMING CHAIN INSPECTION*.

Carefully pull the timing chain downwards and sideways, then out of the crankcase.

Timing Chain Removal (PTO Side)

Refer to *BOTTOM END* subsection and remove following parts:
- PTO cover
- Breather gear
- Intermediate gear.

Refer to *TOP END* subsection and remove following parts:
- Valve cover.

Refer to following procedures in this subsection and remove following parts:
- Chain tensioner
- Camshaft timing gear.

Remove timing chain guide (tensioner side) and lower timing chain guide.

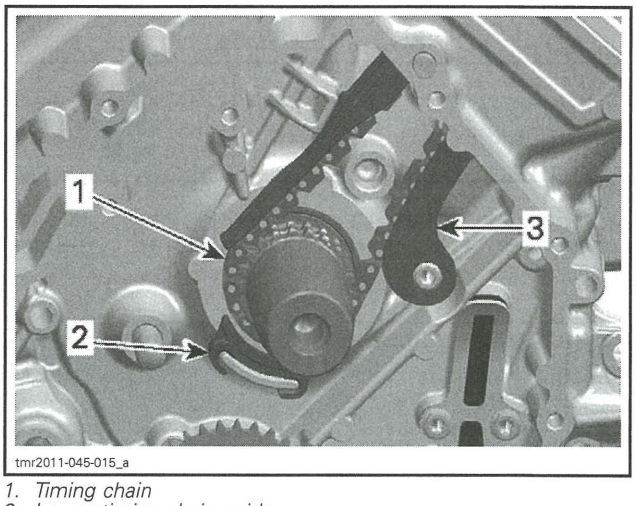

1. Timing chain
2. Lower timing chain guide
3. Timing chain guide (tensioner side)

Carefully pull the timing chain sideward and down from the crankcase.

NOTE: Mark the operating direction of the timing chain and check for excessive radial play before removal. Refer to *TIMING CHAIN INSPECTION*.

Timing Chain Inspection

Inspection is the same for both timing chains.

Check timing chain on camshaft timing gear for excessive radial play.

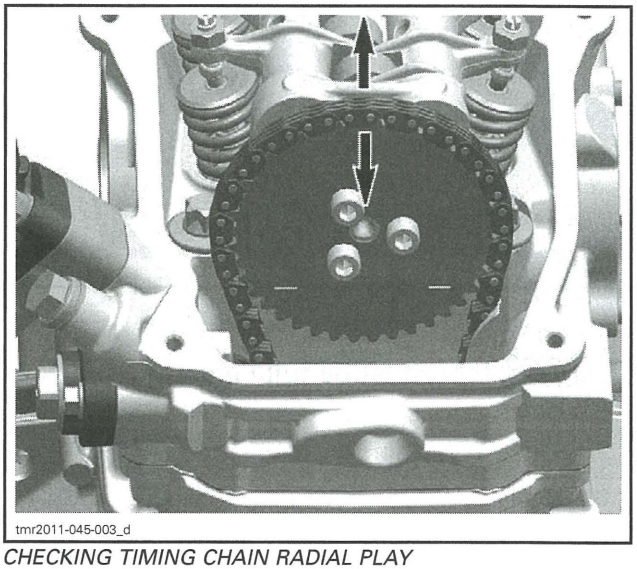

CHECKING TIMING CHAIN RADIAL PLAY

Check chain condition for wear and teeth condition.

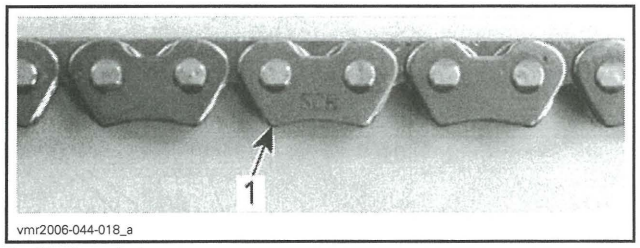

1. Timing chain

If chain is excessively worn or damaged, replace it as a set (camshaft timing gear and timing chain).

Check timing chain guides for wear, cracks or deforming. Replace as required.

NOTE: Check also the timing chain guide (tensioner side).

Timing Chain Installation

The installation is essentially the reverse of the removal procedure, but pay attention to the following details.

NOTE: Installation is the same for both timing chains.

Install timing chain with camshaft timing gear.

NOTE: Ensure to carry out proper valve timing, refer to *CAMSHAFT TIMING GEARS* in this subsection.

NOTICE **Improper valve timing will damage engine components.**

TIMING CHAIN GUIDE (TENSIONER SIDE)

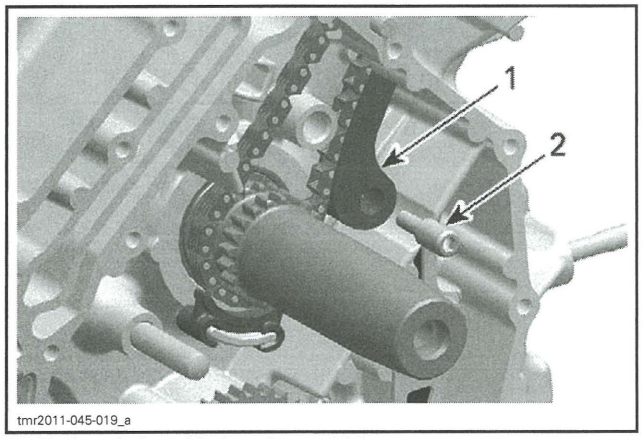

1. Timing chain guide (tensioner side)
2. Bearing screw

Timing Chain Guide Removal (Tensioner Side)

Refer to *TIMING CHAIN* in this subsection.

Timing Chain Guide Inspection (Tensioner Side)

Check timing chain guide for wear, cracks or deforming. Replace if necessary.

Timing Chain Guide Installation (Tensioner Side)

The installation is the reverse of the removal procedure.

TIMING CHAIN GUIDE BEARING SCREW	
Service product	LOCTITE 243 (BLUE) (P/N 293 800 060)
Tightening torque	10 N•m ± 1 N•m (89 lbf•**in** ± 9 lbf•**in**)

BOTTOM END

SERVICE TOOLS

Description	Part Number	Page
CRANKCASE SUPPORT MAG/PTO	529 036 031	151
CRANKSHAFT LOCKING BOLT	529 035 617	154
DRIVE SHAFT OIL SEAL INSTALLER	529 036 028	143–144
DRIVE SHAFT OIL SEAL PROTECTOR	529 036 029	142
PLAIN BEARING REMOVER/INSTALLER	529 035 917	151
PLAIN BEARING REMOVER/INSTALLER	529 036 032	146
PTO COVER OIL SEAL INSTALLER	529 036 033	145

SERVICE PRODUCTS

Description	Part Number	Page
LOCTITE 243 (BLUE)	293 800 060	143
LOCTITE 5910	293 800 081	142
LOCTITE CHISEL (GASKET REMOVER)	413 708 500	142

ENGINE DRIVE SHAFT

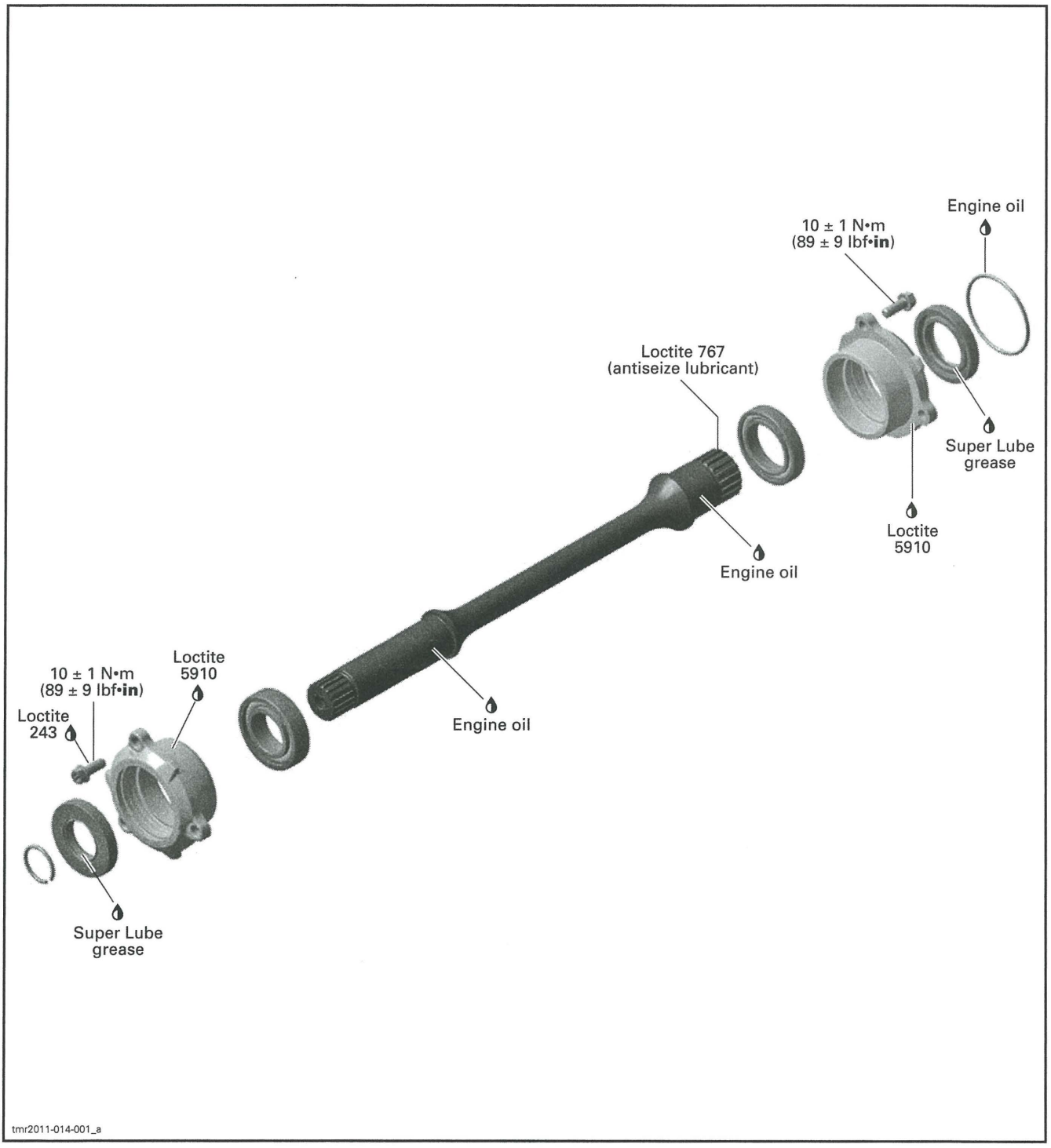

CRANKCASE AND PTO COVER

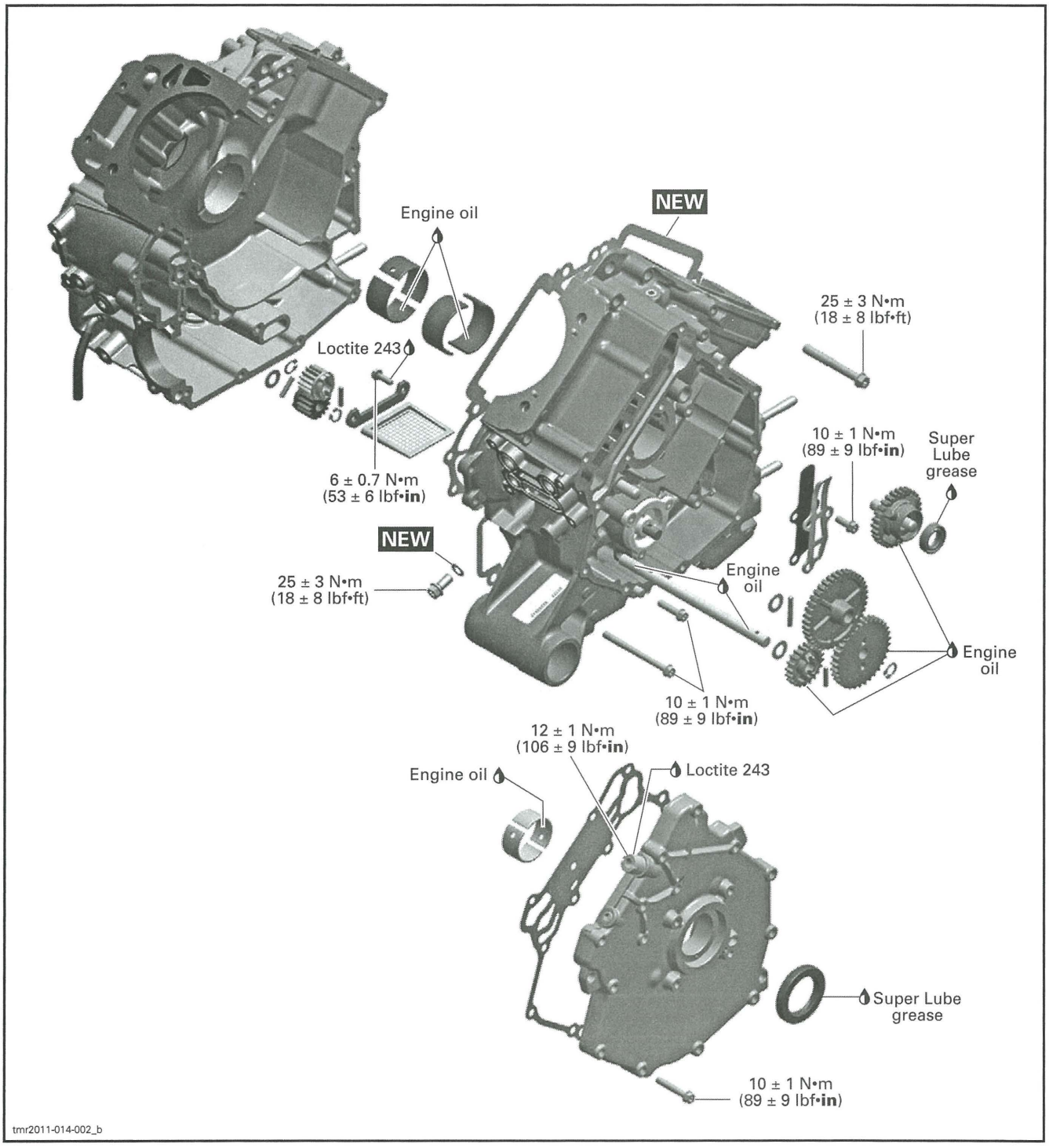

CRANKSHAFT

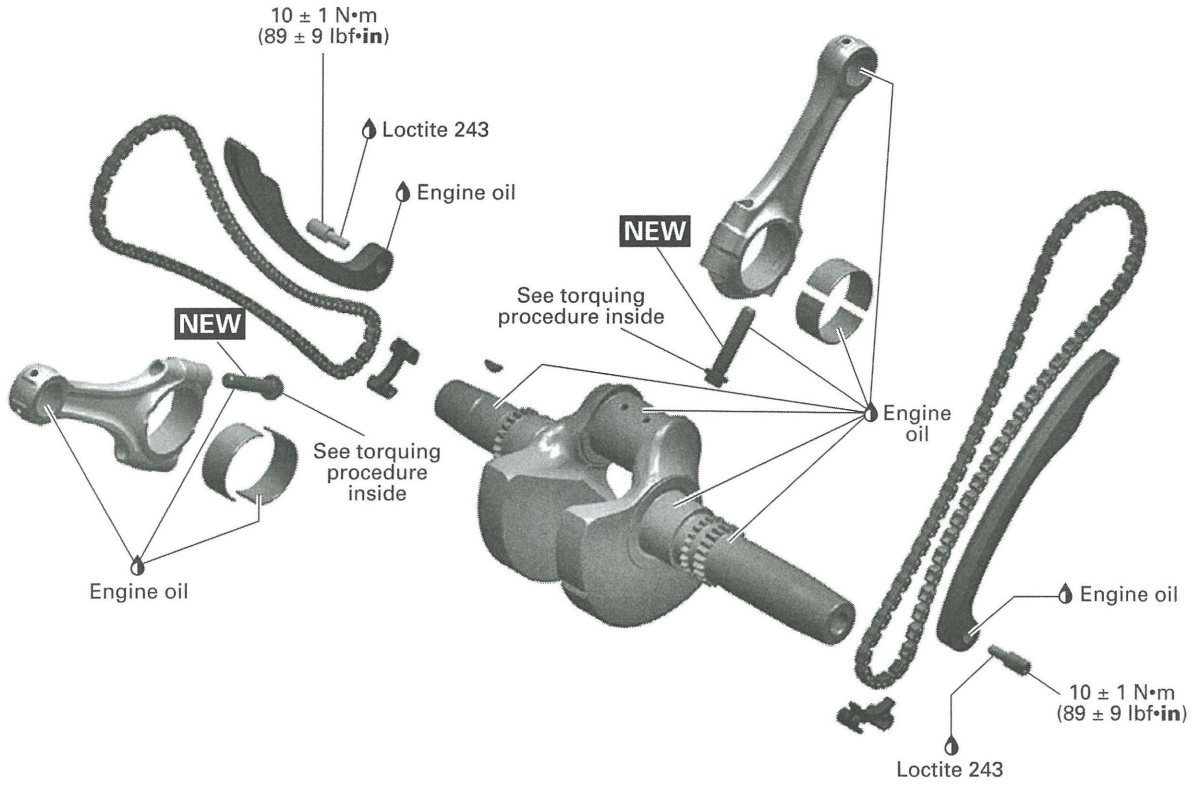

tmr2011-014-003_b

GENERAL

IMPORTANT: Note position of parts on disassembly. This may help to find the root cause of a problem. A component that is not replaced should be reinstalled in the same position as originally mounted.

PROCEDURES

ENGINE DRIVE SHAFT

NOTE: The engine drive shaft transmits the power from the gearbox to the front differential and is located inside the crankcase.

Engine Drive Shaft Removal

Remove the engine. Refer to *ENGINE REMOVAL AND INSTALLATION* subsection.

Rear Bearing Cover Removal

Detach gearbox from engine, refer to *GEARBOX AND 4X4 COUPLING UNIT* subsection.

At rear of engine, remove the bearing cover and its O-ring.

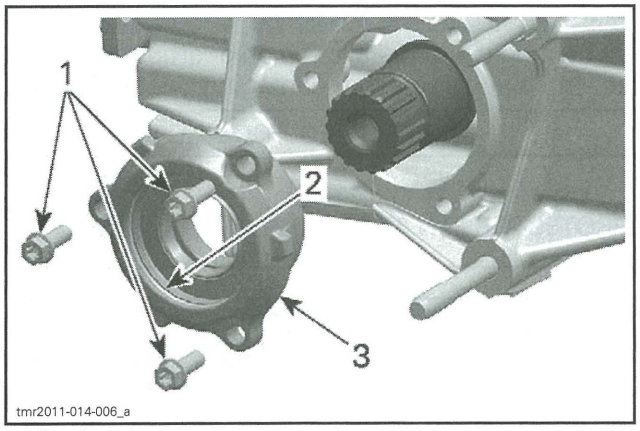

1. *Bearing cover screws*
2. *O-ring*
3. *Bearing cover gearbox side*

Front Bearing Cover Removal

Remove the bearing cover at the front of the engine.

NOTICE **Check ends of the circlip for sharp edges or burr before removing the drive shaft, to avoid damaging the oil seal.**

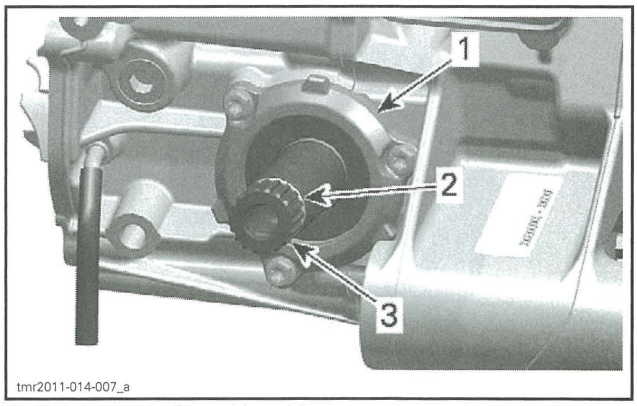

1. *Bearing cover front drive side*
2. *Circlip*
3. *Drive shaft*

Engine Drive Shaft Removal

Split crankcase, refer to *CRANKCASE* in this subsection.

Remove engine drive shaft from the crankcase.

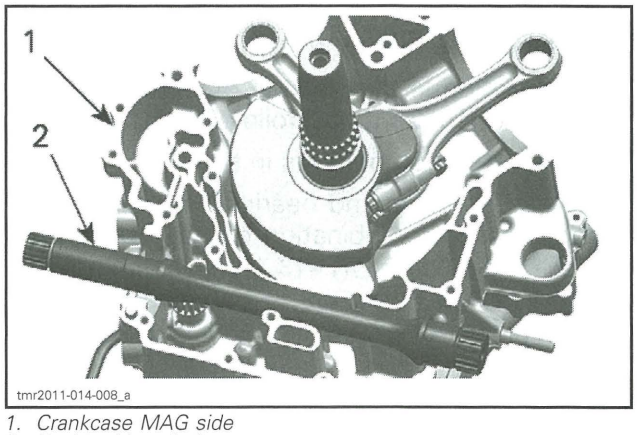

1. *Crankcase MAG side*
2. *Engine drive shaft*

Engine Drive Shaft Inspection

Replace oil seals and/or O-ring (bearing cover gearbox side) if they are brittle, hard or damaged.

Check drive shaft bearings for contamination and/or metal shavings. Check if bearings turn freely and smoothly. Replace if necessary.

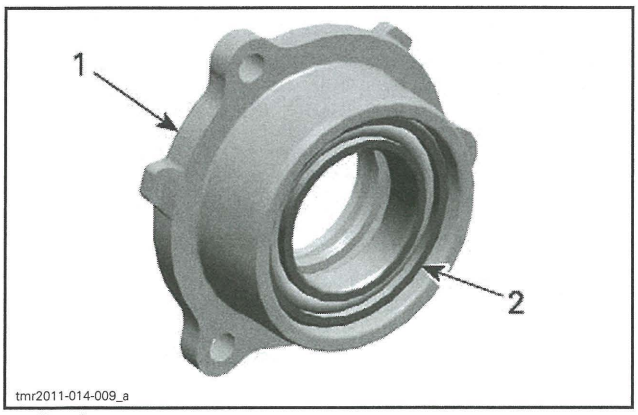

1. *Bearing cover*
2. *Drive shaft bearing*

Check drive shaft for cracks, bend, pitting or other visible damages.

Check drive shaft splines for wear or damages.

Check oil seal running surface of the drive shaft for scratches. Replace if necessary.

Engine Drive Shaft Installation

The installation is the reverse of removal procedure. Pay attention to the following details.

Clean all metal components in solvent.

Crankcase surfaces and bearing covers are best cleaned using a combination of LOCTITE CHISEL (GASKET REMOVER) (P/N 413 708 500) and a brass brush. Brush a first pass in one direction then make the final brushing perpendicularly (90°) to the first pass.

NOTICE **Do not wipe with rags. Use a new clean hand towel only.**

Use a suitable installer for installing bearings.

Use LOCTITE 5910 (P/N 293 800 081) on mating surfaces.

IMPORTANT: When beginning the application of the bearing cover sealant, the assembly and the first torquing should be done within 10 minutes. It is suggested to have all you need on hand to save time.

Use a plexiglass plate and apply some sealant on it. Use a soft rubber roller 50 mm - 75 mm (2 in - 3 in), available in arts products suppliers for printing, and roll the sealant to get a thin uniform coat on the plate (spread as necessary). When ready, apply the sealant on bearing cover surfaces.

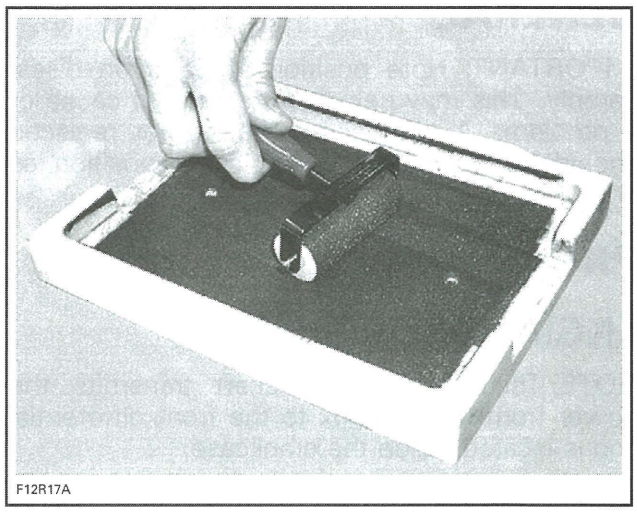

Do not apply in excess as it will spread out inside crankcase.

NOTE: It is recommended to apply this specific sealant as described here to get a uniform application without lumps. If you do not use the roller method, you may use your finger to uniformly distribute the sealant (using a finger will not affect the adhesion).

Rear Bearing Cover Installation

For bearing cover installation on gearbox side, protect the oil seal to avoid damaging the sealing lip.

REQUIRED TOOL	
DRIVE SHAFT OIL SEAL PROTECTOR (P/N 529 036 029)	

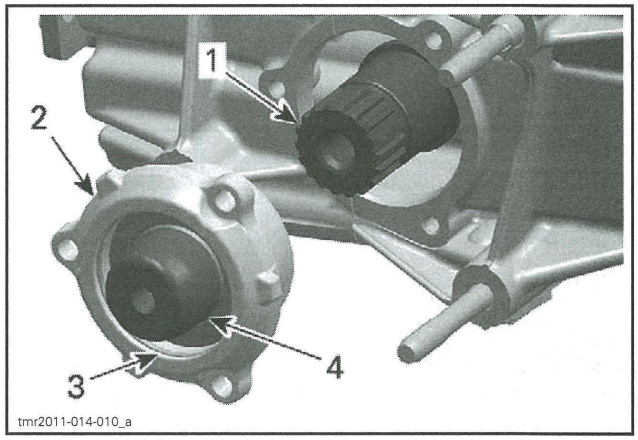

1. *Drive shaft*
2. *Bearing cover gearbox side*
3. *O-ring*
4. *Protection sleeve*

REAR BEARING COVER SCREWS	
Tightening torque	10 N•m ± 1 N•m (89 lbf•**in** ± 9 lbf•**in**)

Front Bearing Cover Installation

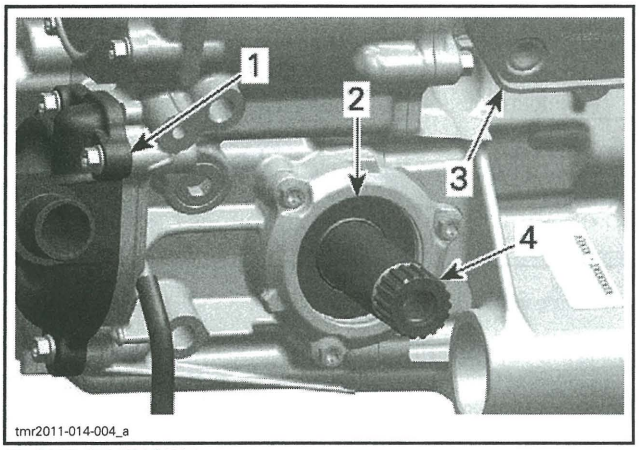

FRONT OF ENGINE
1. *Water pump cover*
2. *Oil seal front side*
3. *Oil cooler*
4. *Drive shaft*

FRONT BEARING COVER SCREWS	
Service product	LOCTITE 243 (BLUE) (P/N 293 800 060)
Tightening torque	10 N•m ± 1 N•m (89 lbf•**in** ± 9 lbf•**in**)

Engine Drive Shaft Installation

Finally check for axial play of the drive shaft.

FRONT OIL SEAL (ENGINE DRIVE SHAFT)

Front Oil Seal Replacement (Engine Drive Shaft)

NOTE: The front oil seal can be replaced with the engine installed.

1. Remove front propeller shaft.
2. Remove adapter sleeve between propeller shaft and front engine drive shaft.
3. Remove the front bearing cover, refer to *ENGINE DRIVE SHAFT REMOVAL/INSTALLATION* in this subsection.
4. Remove drive shaft seal from bearing cover.

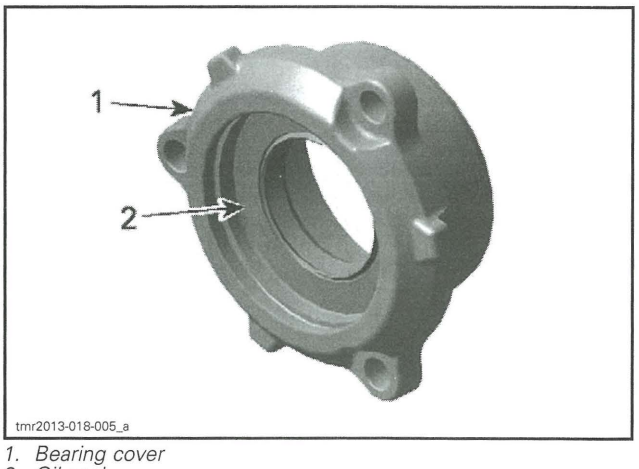

1. *Bearing cover*
2. *Oil seal*

5. Install drive shaft oil seal using the following tool.

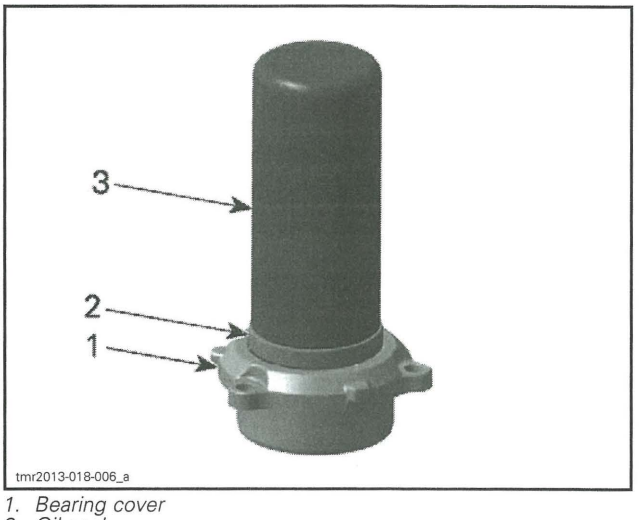

1. *Bearing cover*
2. *Oil seal*
3. *Oil seal installer*

REQUIRED TOOL	
DRIVE SHAFT OIL SEAL INSTALLER (P/N 529 036 028)	

6. Reinstall remaining parts in the reverse order of removal.

REAR OIL SEAL (ENGINE DRIVE SHAFT)

Rear Oil Seal Replacement (Engine Drive Shaft)

1. Remove rear bearing cover, refer to *ENGINE DRIVE SHAFT REMOVAL/INSTALLATION* in this subsection.
2. Remove drive shaft seal from bearing cover.
3. Remove O-ring from bearing cover.

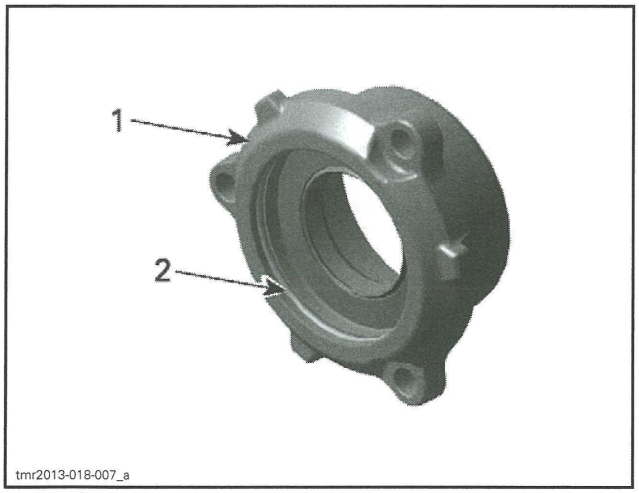

1. Bearing cover
2. O-ring

4. Install drive shaft oil seal using the following tool.

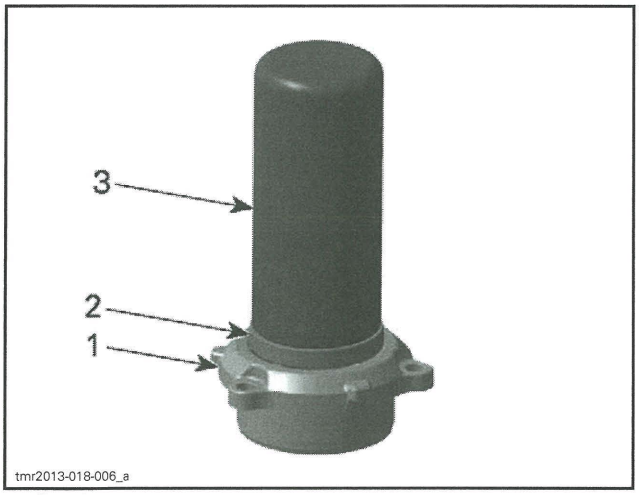

1. Bearing cover
2. Oil seal
3. Oil seal installer

REQUIRED TOOL	
DRIVE SHAFT OIL SEAL INSTALLER (P/N 529 036 028)	

5. Install O-ring in rear bearing cover.

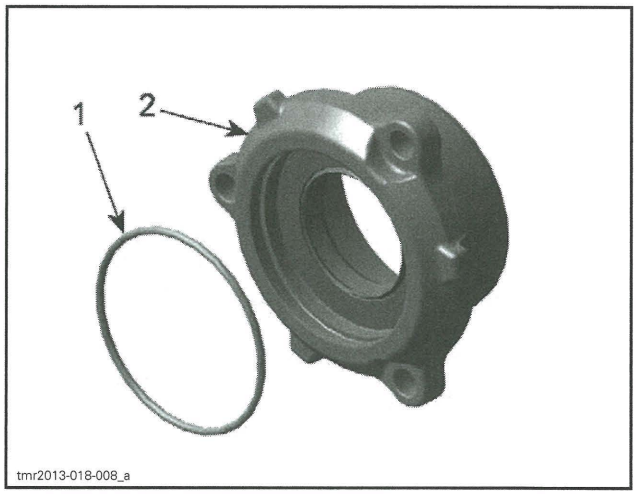

1. O-ring
2. Bearing cover

6. Reinstall remaining parts in the reverse order of removal.

PTO COVER OIL SEAL

To replace oil seal it is not necessary to remove engine from vehicle.

PTO Oil Seal Removal

Refer to *CONTINUOUSLY VARIABLE TRANSMISSION (CVT)* subsection to remove the following parts:

- CVT cover
- Drive pulley
- Driven pulley
- CVT air guide.

Remove oil seal with a small flat screwdriver.

NOTICE **Avoid scoring surfaces with tool.**

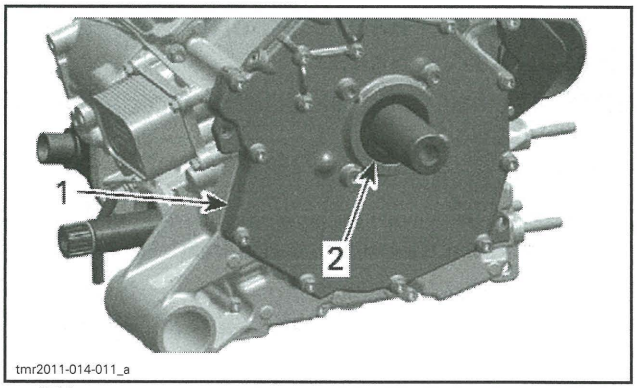

1. PTO cover
2. Oil seal

PTO Oil Seal Inspection

Check oil seal running surface of crankshaft PTO side for grooves. Replace if necessary.

PTO Oil Seal Installation

The installation is the reverse of the removal procedure.

Pay attention to the following details.

NOTICE Oil seal must be installed with sealing lip toward the engine.

Push oil seal in place.

REQUIRED TOOL	
PTO COVER OIL SEAL INSTALLER (P/N 529 036 033)	

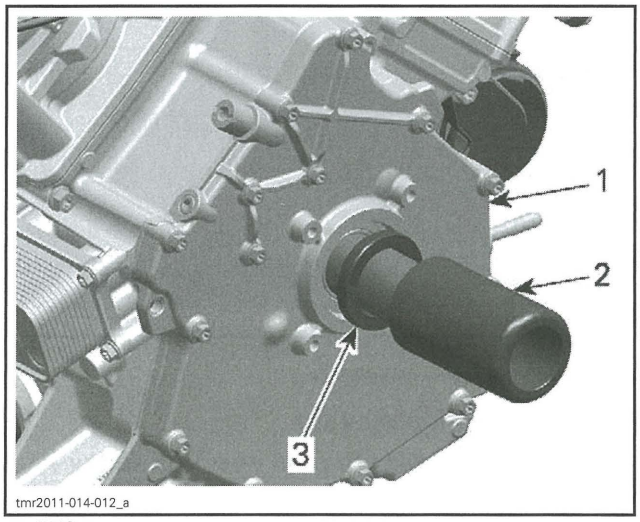

1. PTO cover
2. Oil seal installer
3. Oil seal

PTO COVER

PTO Cover Removal

Refer to *CONTINUOUSLY VARIABLE TRANSMISSION (CVT)* subsection to remove the following parts:

- CVT cover
- Drive pulley
- Driven pulley
- CVT air guide.

Disconnect vent hose.

Remove PTO cover screws and pull PTO cover.

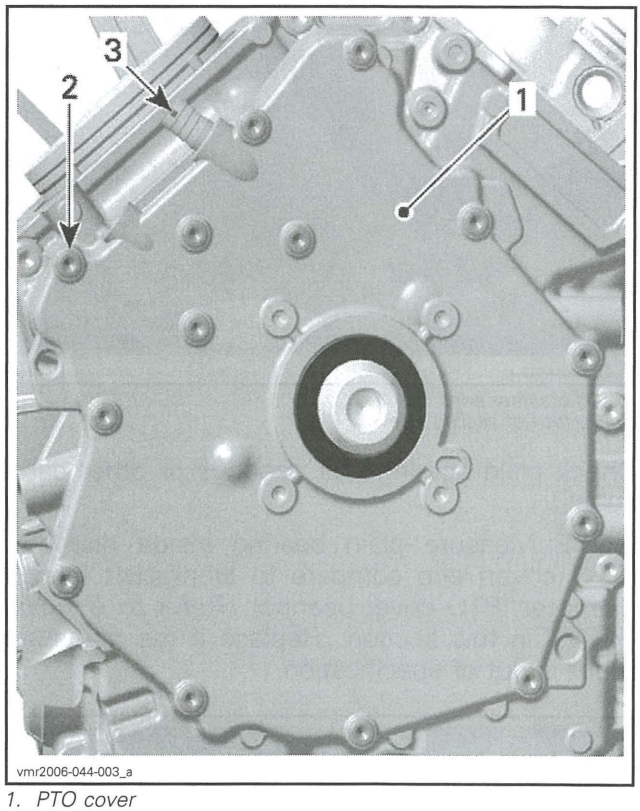

1. PTO cover
2. PTO cover screws
3. Vent hose nipple

PTO Cover Inspection

Check the PTO cover for cracks or other damage.

Replace PTO cover if damaged.

Clean oil breather bore in PTO cover from contaminations with part cleaner then use pressurized air to dry it.

⚠ WARNING

Always wear skin and eye protection. Chemicals can cause skin rash, skin burns and severe eye injury.

Check surface of sealing sleeve for wear or other damages. Replace PTO cover if damaged.

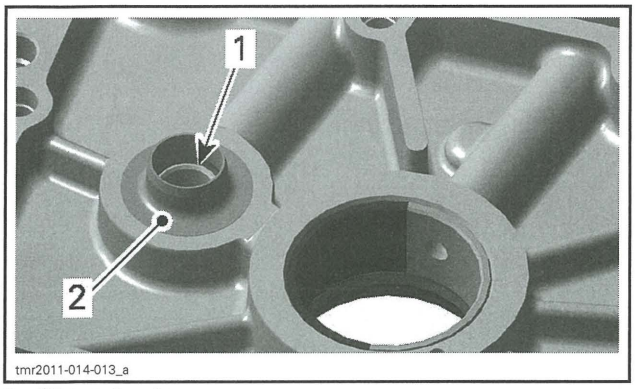

1. Oil breather bore
2. Surface of sealing sleeve

Check plain bearings for scorings or other damages.

NOTE: Measure plain bearing inside diameter (PTO cover) and compare to crankshaft journal diameter (PTO cover bearing). Refer to *CRANKSHAFT* in this section. Replace if the measurement is out of specification.

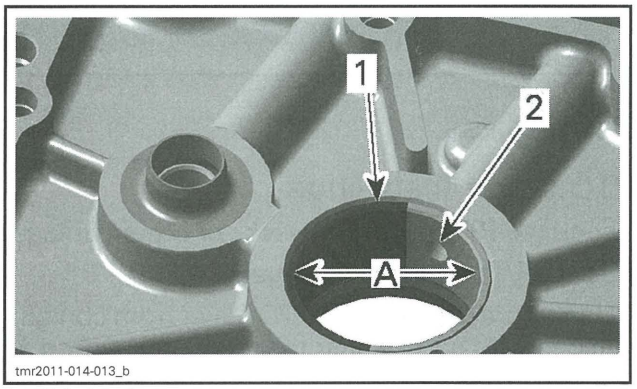

1. Plain bearing
2. Oil bore
A. Measure plain bearing inside diameter

PLAIN BEARING INSIDE DIAMETER (PTO COVER)	
SERVICE LIMIT	34.120 mm (1.3433 in)

Plain Bearing Replacement (PTO Cover)

Plain Bearing Removal

NOTICE **Unless otherwise instructed, never use a hammer to install plain bearings. Use a press only.**

Carefully remove the PTO oil seal with a screwdriver, without damaging the PTO cover.

Press out the plain bearings from the outside towards the inside.

REQUIRED TOOL	
PLAIN BEARING REMOVER/INSTALLER (P/N 529 036 032)	

The PTO cover has to be supported from below with suitable support with straight surface, in order to prevent damage of the sealing surface.

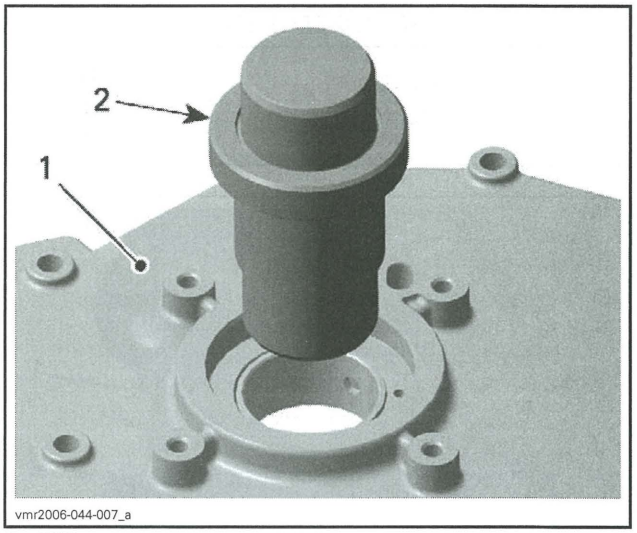

1. PTO cover
2. Plain bearing remover/installer

Plain Bearing Installation

NOTE: Do not lubricate plain bearings and/or PTO cover for installation.

Install plain bearings in a cool PTO cover.

REQUIRED TOOL	
PLAIN BEARING REMOVER/INSTALLER (P/N 529 036 032)	

NOTICE **Mark position of oil bore on PTO cover and on plain bearing remover/installer. Align mark on plain bearing remover/installer with mark on PTO cover.**

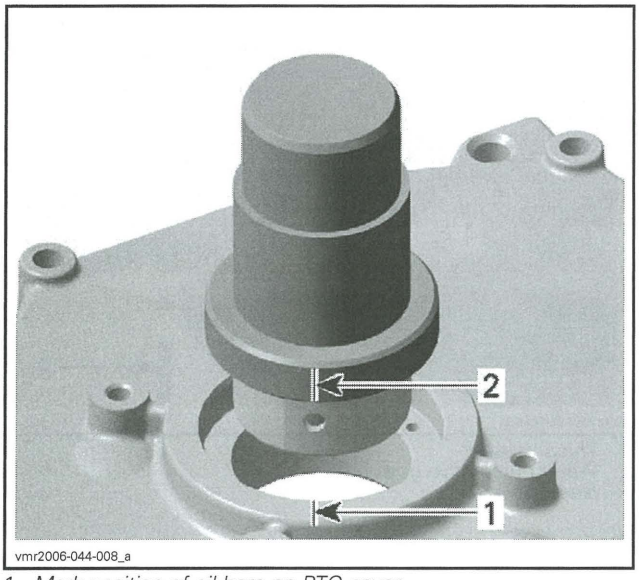

1. *Mark position of oil bore on PTO cover*
2. *Mark position of oil bore on plain bearing remover/installer*

Carefully press-in the plain bearings in the same direction as during disassembly, from the outside towards the inside. Support PTO cover with suitable support with straight surface, in order to prevent damage of the sealing surface.

NOTE: Wrong oil bore position will stop oil supply to plain bearings and will damage the engine.

NOTICE **The partition of the plain bearings must be positioned near to oil bore in counterclockwise direction.**

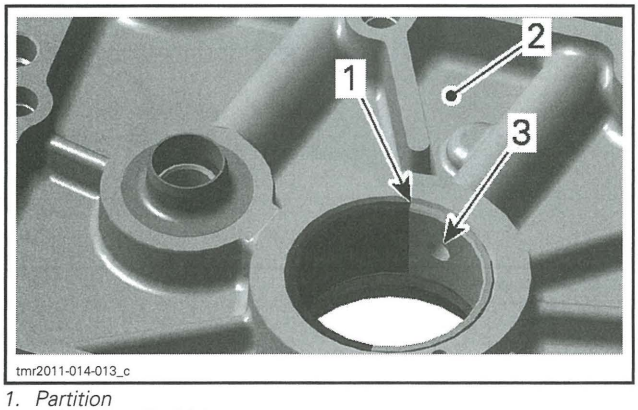

1. *Partition*
2. *PTO cover (inside)*
3. *Oil bore*

PTO Cover Installation

For installation, reverse the removal procedure.

Pay attention to the following details.

NOTE: At installation, replace PTO cover gasket and oil seal.

Tighten PTO cover screws following the illustrated sequence.

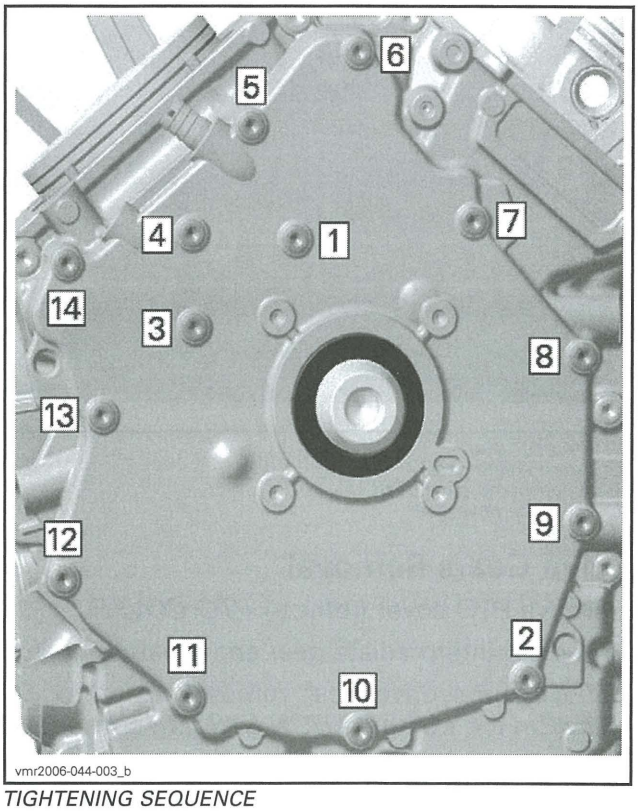

TIGHTENING SEQUENCE

PTO COVER SCREWS	
Tightening torque	10 N•m ± 1 N•m (89 lbf•**in** ± 9 lbf•**in**)

DRIVE GEARS

Drive Gears Location

The engine is equipped with a breather gear which prevents engine oil coming out through the breathing system into the air intake system.

The drive gears are located on the engine PTO side behind the PTO cover.

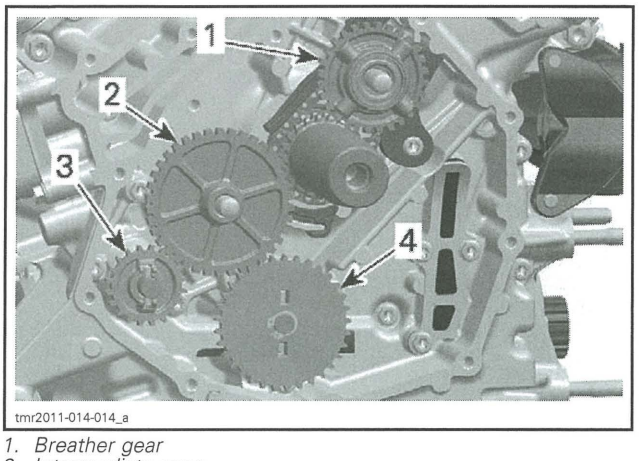

1. *Breather gear*
2. *Intermediate gear*
3. *Water pump drive gear*
4. *Oil pump drive gear*

Drive Gears Removal

Remove PTO cover (refer to *PTO COVER*).

Withdraw intermediate gear and breather gear.

For oil pump drive gear removal, refer to *OIL PUMP* in the *LUBRICATION SYSTEM* subsection.

To remove water pump drive gear, pull the shaft assembly a bit out and turn it about one teeth until it stays out.

Then push water pump drive gear in.

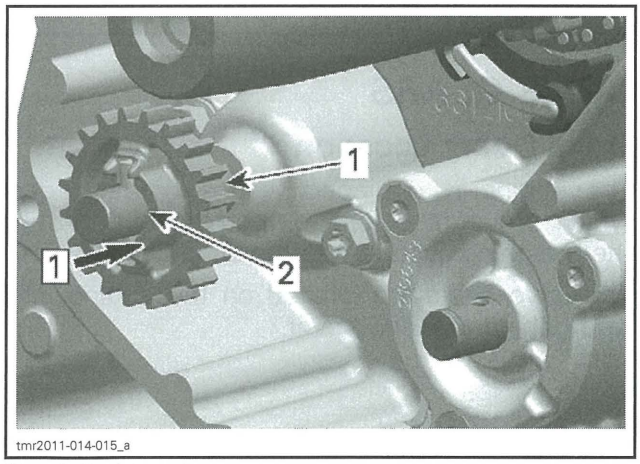

Step 1: Push gear in

1. *Water pump drive gear*
2. *Intermediate shaft*

Remove needle pin and pull water pump drive gear out.

Remove thrust washer from intermediate shaft.

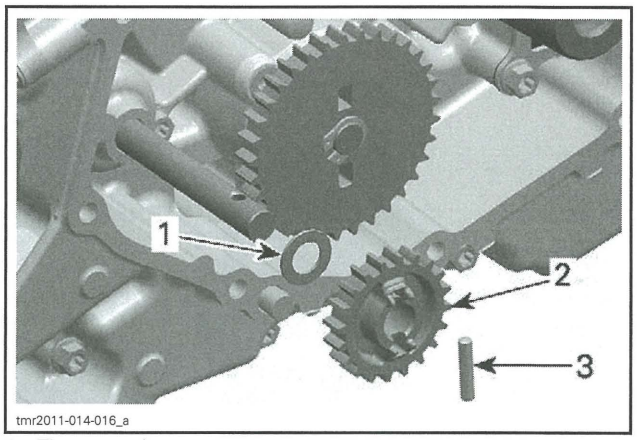

1. *Thrust washer*
2. *Water pump drive gear*
3. *Needle pin*

Drive Gears Inspection

Intermediate Gear/Oil Pump Drive Gear/Water Pump Drive Gear

Inspect gears for wear or other damage. Replace if damaged.

Breather Gear

Check if oil seal is brittle, hard or damaged. Replace if necessary.

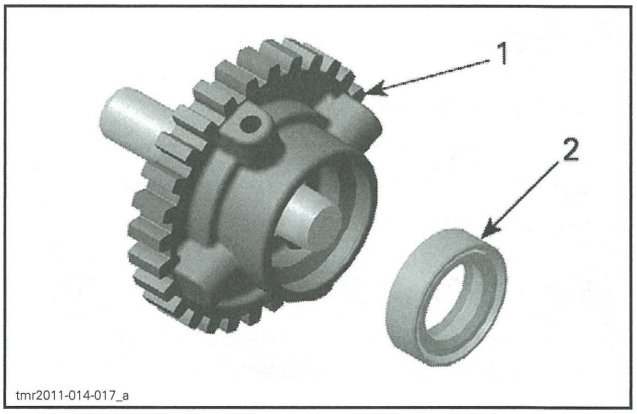

1. *Breather gear*
2. *Oil seal*

Inspect gear for wear or other damage.

Check ball bearing for excessive play and smooth operation. Replace breather gear assembly if necessary.

Drive Gears Installation

The installation is essentially the reverse of the removal procedure.

Adequately oil the ball bearing of the breather gear.

CRANKCASE

Crankcase Disassembly

1. Refer to *PERIODIC MAINTENANCE PROCEDURES* subsection and:
   1.1 Drain cooling system.
   1.2 Drain engine oil.
   1.3 Drain gearbox oil.
2. Lock crankshaft. Refer to *CRANKSHAFT LOCKING PROCEDURE* in the this subsection.
3. Refer to *CONTINUOUSLY VARIABLE TRANSMISSION (CVT)* subsection to remove following parts:
   - CVT cover
   - Drive pulley
   - Driven pulley
   - CVT air guide.
4. Remove engine from vehicle. Refer to *ENGINE REMOVAL AND INSTALLATION* subsection.
5. Detach gearbox from engine. Refer to *GEARBOX AND 4X4 COUPLING UNIT*.
6. Refer to *MAGNETO SYSTEM* subsection to remove the following parts:
   - Magneto cover
   - Rotor with sprag clutch gear
   - Starter drive gears.
7. Refer to following procedures in this subsection to remove the following parts:
   - PTO cover
   - Drive gears
   - Bearing covers of engine drive shaft.
8. Refer to *TIMING CHAIN* subsection to remove following parts:
   - Chain tensioners
   - Camshaft timing gears
   - Timing chains
   - Timing chain guides.
9. Refer to *TOP END* subsection to remove following parts:
   - Front cylinder head
   - Rear cylinder head
   - Cylinders.
10. Refer to *COOLING SYSTEM* subsection to remove following parts:
    - Water pump housing.
11. Refer to *LUBRICATION SYSTEM* subsection to remove following parts:
    - Oil filter
    - Oil cooler
    - Oil pump drive gear.

NOTE: Oil pump removal from crankcase is not necessary, but recommended to see condition of oil pump (refer to *LUBRICATION SYSTEM* subsection).

12. Remove electric starter.

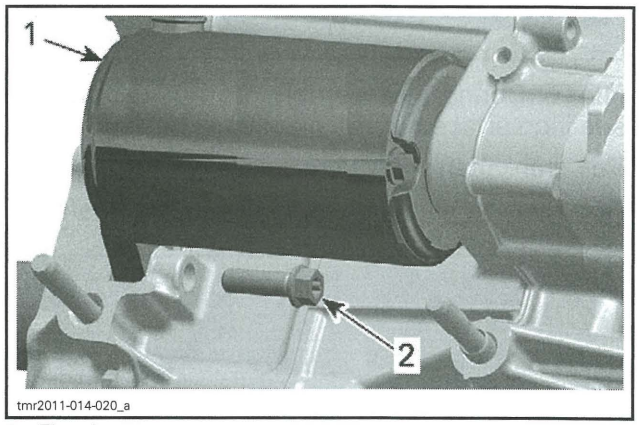

1. Electric starter
2. Screw

NOTE: Before splitting the crankcase, measure crankshaft axial play. Refer to *CRANKSHAFT*.

Remove retaining screws of crankcase.

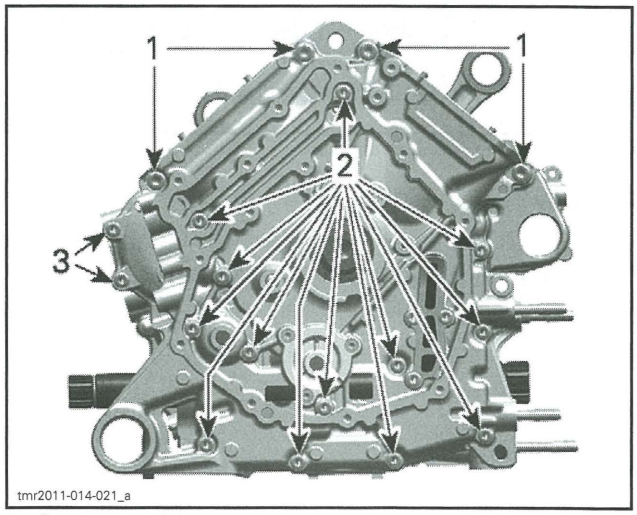

1. Four screws M8 x 65
2. 13 screws M6 x 75
3. Two screws M6 x 25

Carefully split crankcase halves by using a screwdriver and a soft hammer.

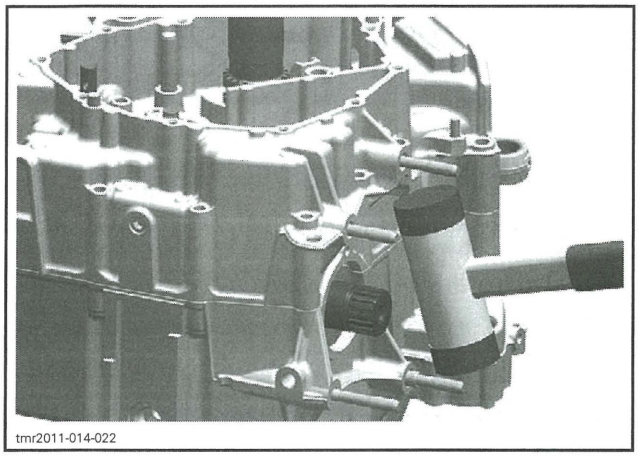
tmr2011-014-022

NOTE: During disassembly, do not damage the sealing surfaces of the crankcase halves.

Pull crankshaft out of crankcase.

Remove the water pump intermediate shaft.

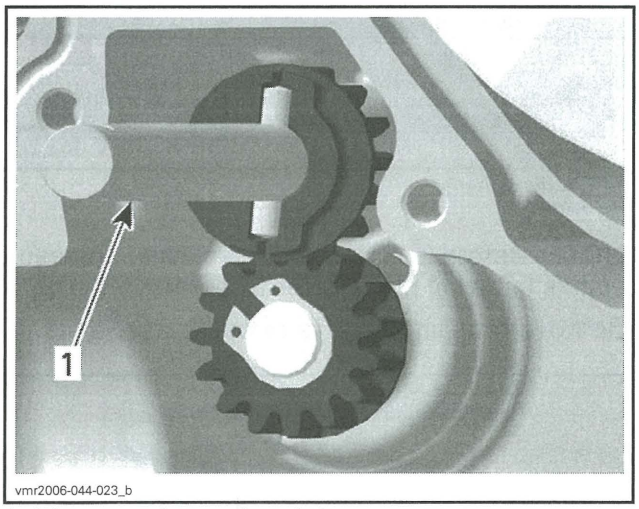

vmr2006-044-023_b

1. Water pump intermediate shaft

Remove engine oil strainer.

NOTE: Oil strainer removal for inspection and cleaning is recommended. Refer to *LUBRICATION SYSTEM* subsection.

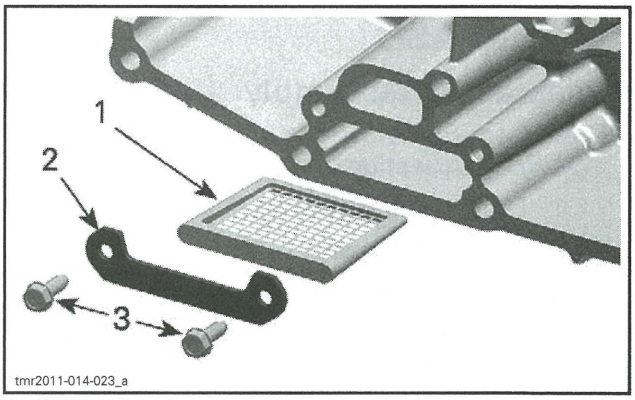

tmr2011-014-023_a

1. Engine oil strainer
2. Retaining plate
3. Screws

Crankcase Cleaning

⚠ WARNING

Use safety goggles to avoid eye injuries.

Clean crankcase using a part cleaner.

Dry crankcase using compressed air.

Blow the oil supply lines.

Crankcase Inspection

Check crankcase halves for cracks or other damage. Replace if damaged.

Check MAG and PTO plain bearings in for scoring or other damages.

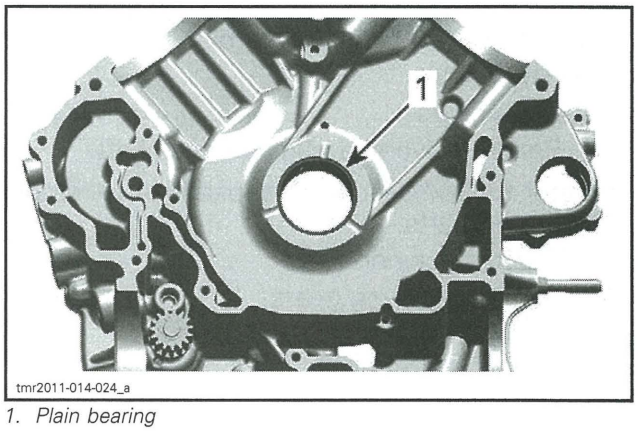

tmr2011-014-024_a

1. Plain bearing

NOTE: Measure plain bearing inside diameter and compare to PTO/MAG main journal diameters of crankshaft (refer to *CRANKSHAFT*). Replace if the measurements are out of specification.

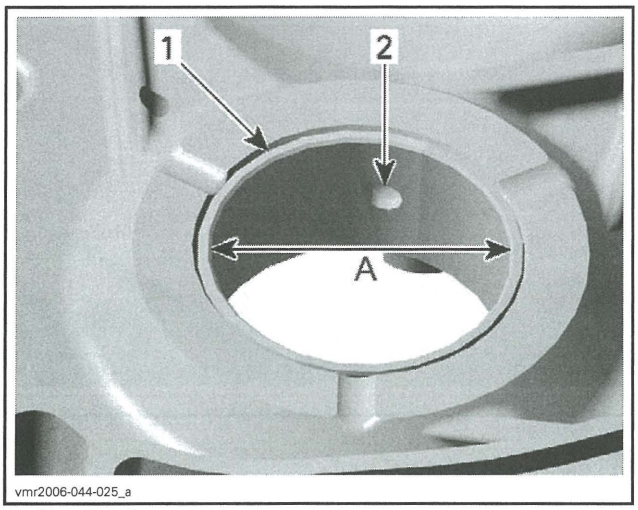

1. Plain bearing
2. Oil bore
A. Measure plain bearing inside diameter

MAIN BEARING INSIDE DIAMETER (PTO/MAG)	
SERVICE LIMIT	42.100 mm (1.6575 in)

Plain Bearing Replacement (Main)

Plain Bearing Removal

NOTICE Always support crankcase halves properly when plain bearings are removed. Damages to crankcase halves may occur if this procedure is not performed correctly.

NOTE: Always use a press for removal of plain bearings.

Carefully press the plain bearings out, from the crankcase half inside towards the outside.

REQUIRED TOOLS	
CRANKCASE SUPPORT MAG/PTO (P/N 529 036 031)	
PLAIN BEARING REMOVER/INSTALLER (P/N 529 035 917)	

NOTE: During disassembly, make sure not to damage the sealing surfaces of the crankcase halves.

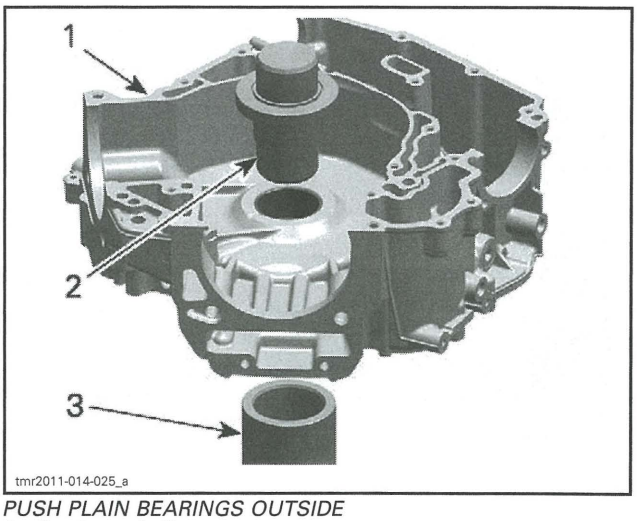

PUSH PLAIN BEARINGS OUTSIDE
1. Crankcase half
2. Plain bearing remover/installer
3. Crankcase support sleeve (P/N 529 036 031)

Plain Bearing Installation (Main)

NOTICE Unless otherwise instructed, never use hammer to install plain bearings. Use press only.

NOTE: Place the proper crankcase support sleeve under crankcase halves before installing the plain bearings (refer to *BEARING REMOVAL PROCEDURE*).

Carefully press in the plain bearings in the same direction as during disassembly, from the crankcase inside towards the outside.

During reassembly, make sure not to damage the sealing surfaces of the crankcase halves.

Install plain bearings in a cold crankcase.

NOTE: Do not lubricate plain bearings and/or crankcase for installation.

REQUIRED TOOL	
PLAIN BEARING REMOVER/INSTALLER (P/N 529 035 917)	

Use an O-ring (Ø 42 x 1 mm to 1.5 mm (.04 in to .06 in) thickness) to hold plain bearings in place during installation. The O-ring will disappear in the groove of the plain bearing remover/installer.

Mark position of plain bearing oil bore on plain bearing remover/installer.

Mark position of oil bore on crankcase half.

Align mark on plain bearing remover/installer with mark on crankcase half.

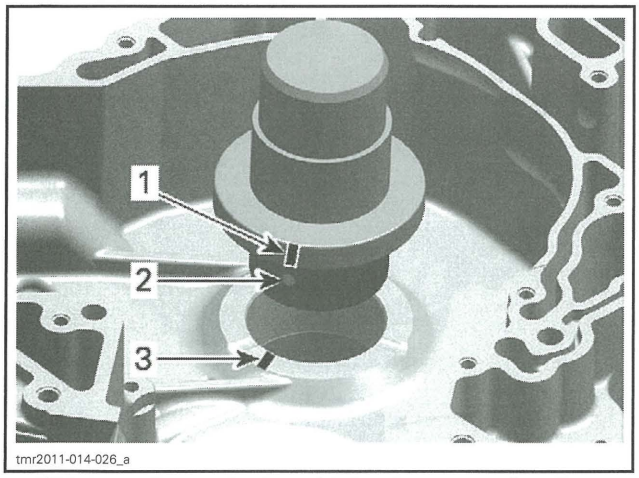

1. *Oil bore position marked on plain bearing remover/installer*
2. *Plain bearing oil bore*
3. *Oil bore position marked on crankcase*

NOTICE **Misalignment of the plain bearing and crankcase oil bores will prevent proper oil supply to plain bearings.**

Carefully press in the plain bearings from inside the crankcase towards the outside.

NOTICE **The partition of the plain bearings in crankcase half MAG side must be positioned near to oil bore in clockwise direction.**

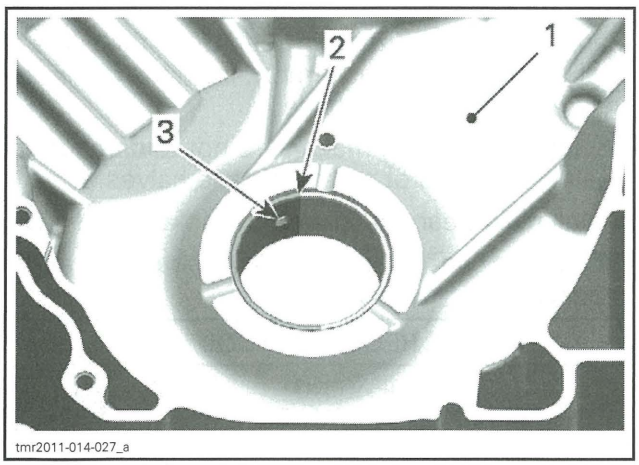

1. *Crankcase half MAG (inside surface)*
2. *Partition*
3. *Oil bore*

NOTICE **The partition of the plain bearings in crankcase half PTO side must be positioned near to oil bore in counterclockwise direction.**

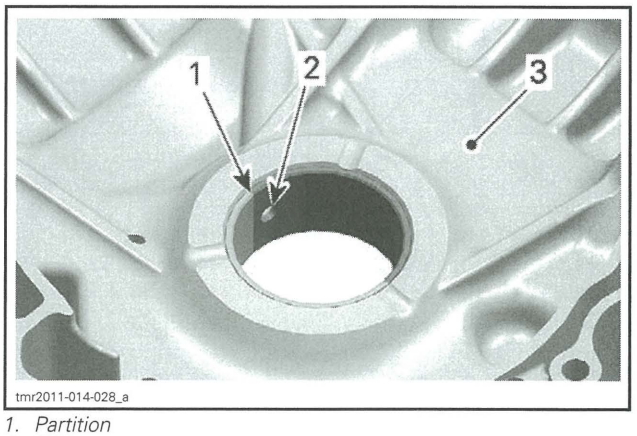

1. *Partition*
2. *Oil bore*
3. *Crankcase half PTO (inside)*

Crankcase Assembly

The assembly of crankcase is essentially the reverse of removal procedure. However, pay attention to the following details.

Install a **NEW** crankcase gasket.

Oil the plain bearings before mounting the crankshaft.

NOTICE **Correctly reinstall crankshaft (refer to *CRANKSHAFT*).**

Properly reinstall engine oil strainer and screws. Refer to *LUBRICATION SYSTEM* subsection.

Reinstall water pump intermediate shaft and gears. Refer to *WATER PUMP GEARS* in the *COOLING SYSTEM* subsection.

Tightening sequence for screws on crankcase is as per following illustration.

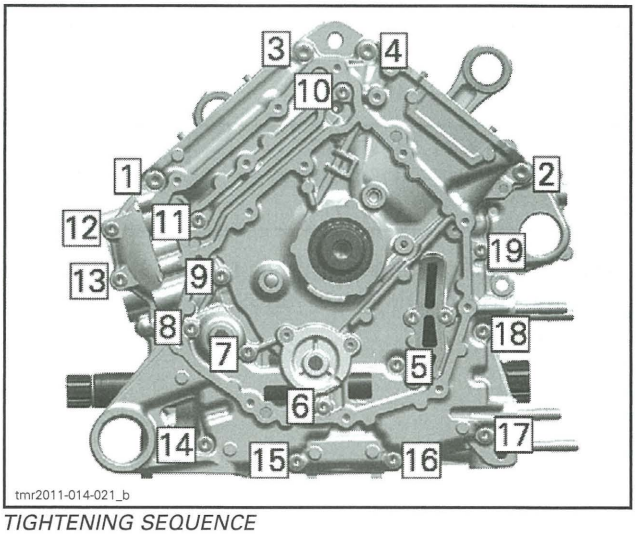

TIGHTENING SEQUENCE

CRANKCASE SCREWS	
Tightening torque - M6	10 N•m ± 1 N•m (89 lbf•**in** ± 9 lbf•**in**)
Tightening torque - M8	25 N•m ± 3 N•m (18 lbf•ft ± 2 lbf•ft)

CRANKSHAFT

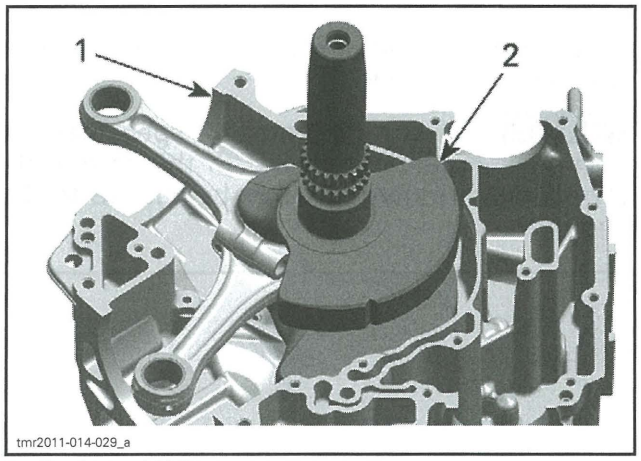

1. Crankcase MAG
2. Crankshaft

Crankshaft Locking Procedure

NOTE: When crankshaft is locked, the rear piston no. 2 is at TDC. Crankshaft can not be locked at piston no.1 TDC.

NOTICE **To see if the rear piston no. 2 is at TDC ignition refer to *CAMSHAFT TIMING GEAR* in the *TIMING CHAIN* subsection.**

Remove:

1. Spark plug cables and spark plugs of both cylinders.
2. Plug screw and O-ring of magneto cover.

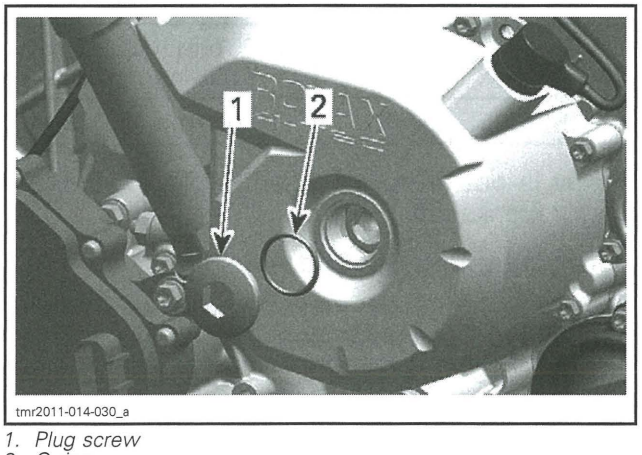

1. Plug screw
2. O-ring

3. Crankshaft position sensor.

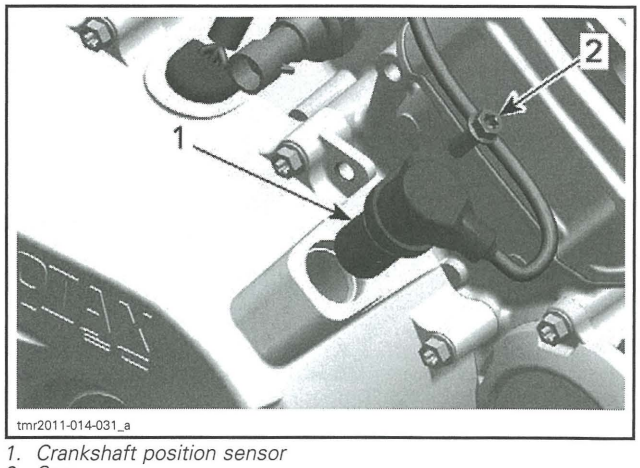

1. Crankshaft position sensor
2. Screw

4. Plug screw and discard sealing ring.

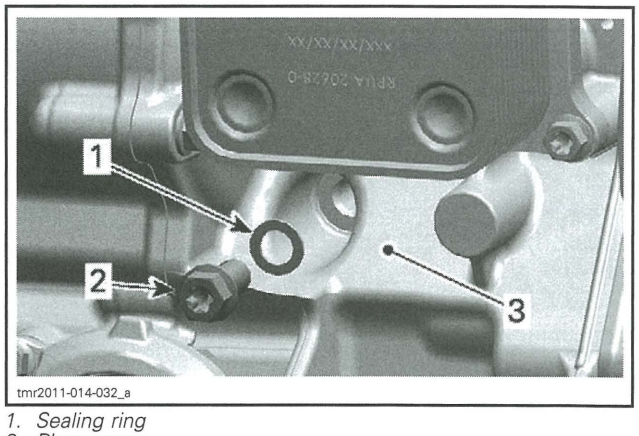

1. Sealing ring
2. Plug screw
3. Crankcase PTO side, front side

Use a 14 mm Allen key to turn crankshaft until piston no. 2 is at TDC.

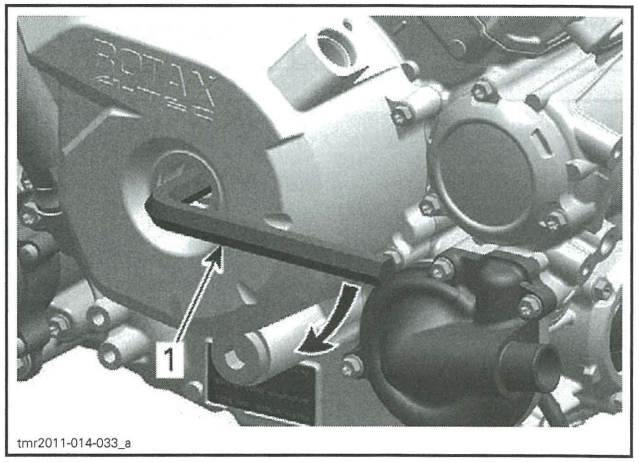

1. Allen key 14 mm

When rear piston is at TDC marks on magneto flywheel "2" and on the magneto cover are aligned.

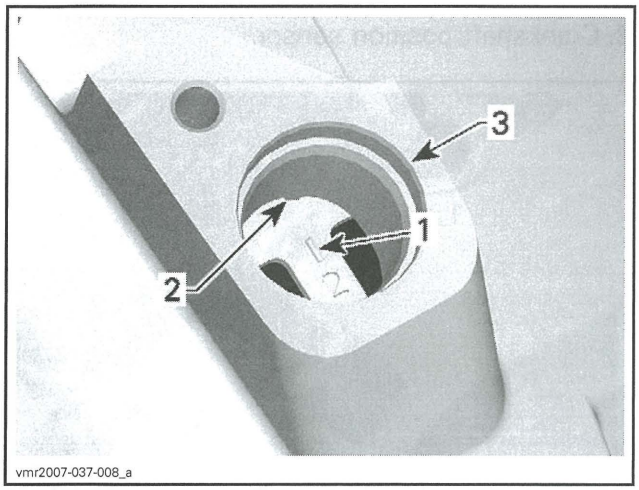

1. *Mark "2" on magneto flywheel*
2. *Notch on magneto cover*
3. *Crankshaft position sensor location*

Use a screwdriver to check if the groove in the crankshaft is aligned with the hole.

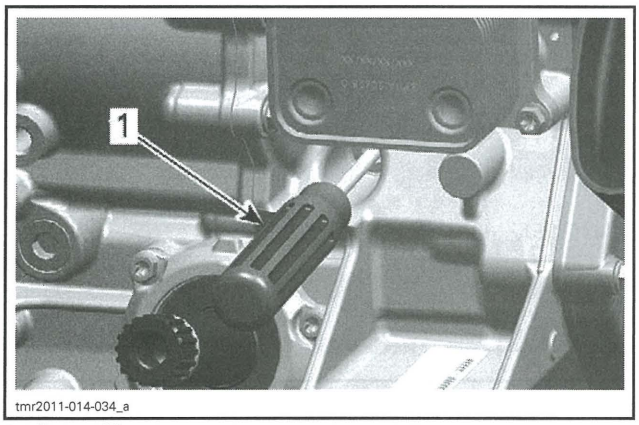

1. *Screwdriver*

Lock crankshaft.

REQUIRED TOOL	
CRANKSHAFT LOCKING BOLT (P/N 529 035 617)	

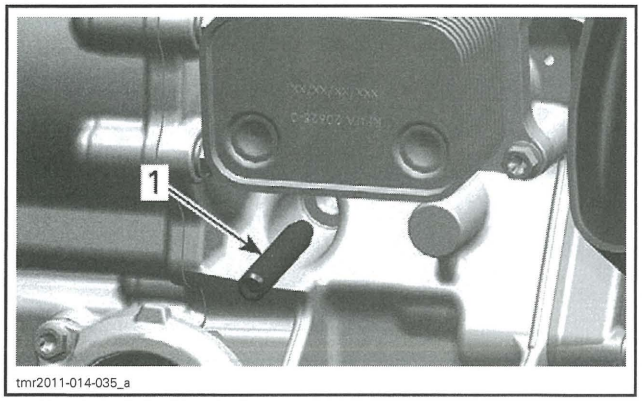

1. *Crankshaft locking bolt*

Gradually insert the tool in the crankshaft groove. Make sure that the tool tip enters the groove and does not jam on the crankshaft balancer surface.

Crankshaft Removal

Refer to *CRANKCASE*.

Crankshaft Inspection

NOTE: Check each bearing journal of crankshaft for scoring, scuffing, cracks or other signs of wear.

NOTE: Replace crankshaft if the gears are worn or otherwise damaged.

NOTICE **Components out of specifications always have to be replaced. If this is not observed, severe damage may be caused to the engine.**

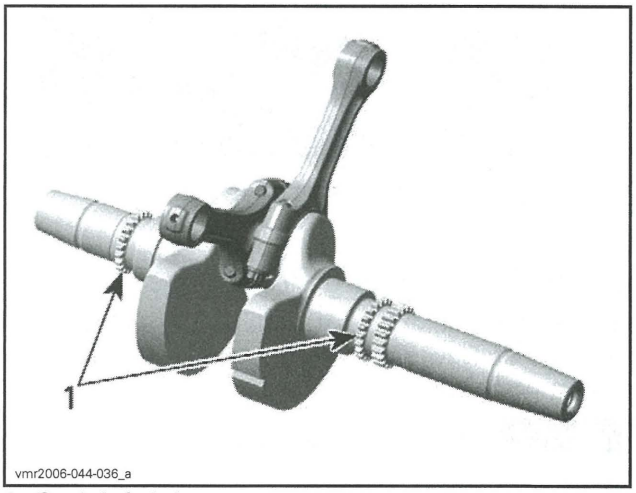

1. *Crankshaft timing gears*

Crankshaft Axial Play

NOTE: Axial play needs to be measured before splitting the crankcase.

Measure play on PTO end, using a dial indicator.

CRANKSHAFT AXIAL PLAY	
NEW	0.200 mm to 0.500 mm (.008 in to .02 in)
SERVICE LIMIT	0.600 mm (.024 in)

If play is out of specification, replace crankcase and/or crankshaft.

Connecting Rod Big End Axial Play

Using a feeler gauge, measure distance between butting face of connecting rods and crankshaft counterweight. If the distance exceeds specified tolerance, replace the crankshaft.

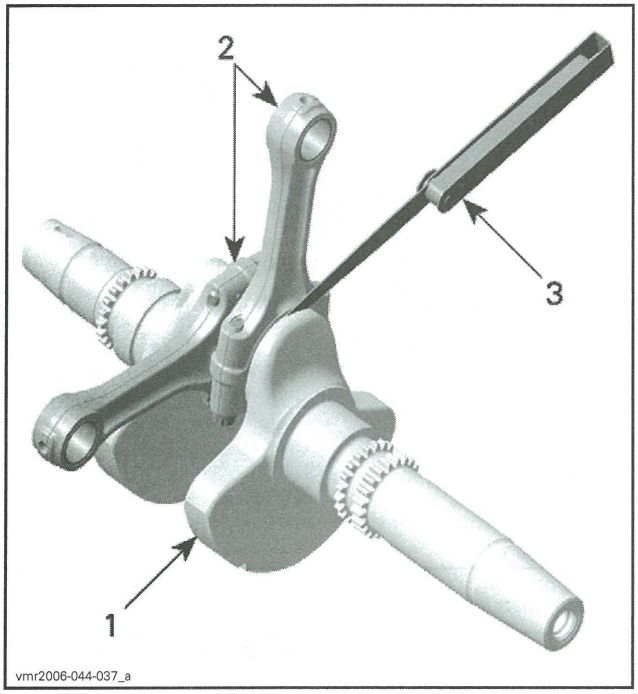

1. *Crankshaft*
2. *Connecting rods*
3. *Feeler gauge*

CONNECTING ROD BIG END AXIAL PLAY		
800R ENGINE	NEW	0.200 mm to 0.500 mm (.008 in to .02 in)
	SERVICE LIMIT	0.600 mm (.024 in)
1000 ENGINE	NEW	0.250 mm to 0.550 mm (.01 in to .022 in)
	SERVICE LIMIT	0.600 mm (.024 in)

Connecting Rod/Piston Pin Clearance

Refer to *TOP END* section.

Connecting Rod Big End Radial Play

NOTE: Prior to remove connecting rod from the crankshaft, mark big end halves together to ensure a correct reinstallation (cracked surface fits in only one position).

Remove connecting rods from crankshaft.

NOTICE **Connecting rod screws are not reusable. Always discard screws and replace by NEW ones. It is recommended to install new plain bearings when reinstalling connecting rods.**

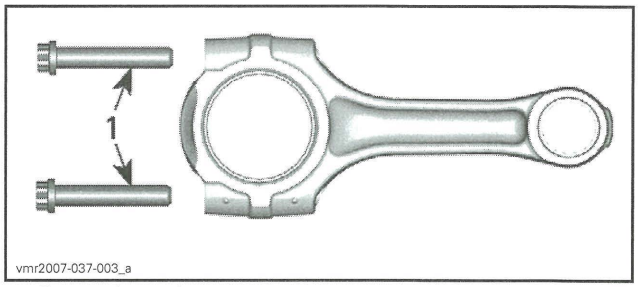

1. *Connecting rod screws*

Measure crankpin. Compare to inside diameter of connecting rod big end.

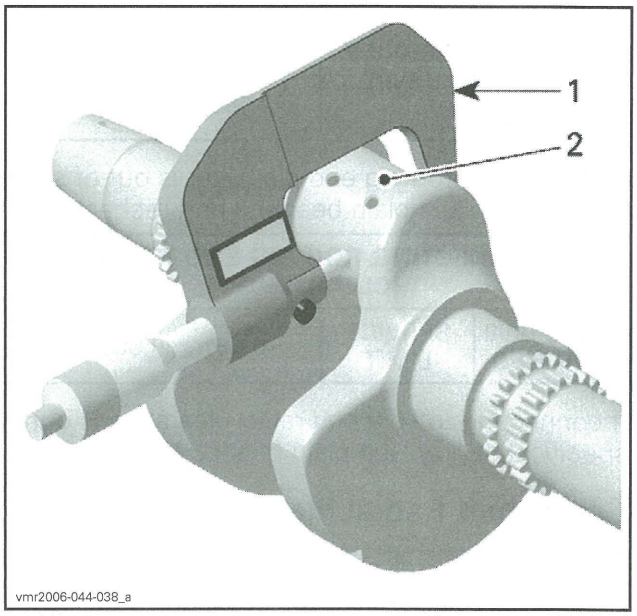

1. *Micrometer*
2. *Crankpin area for plain bearing*

CRANK PIN DIAMETER		
800R ENGINE	NEW	40.009 mm to 40.025 mm (1.5752 in to 1.5758 in)
	SERVICE LIMIT	39.990 mm (1.5744 in)
1000 ENGINE	NEW	41.986 mm to 42.010 mm (1.653 in to 1.6539 in)
	SERVICE LIMIT	41.967 mm (1.6522 in)

If the crank pin diameter is out of specification, replace crankshaft.

To measure the connecting rod big end diameter, use the OLD connecting rod screws.

Install the OLD plain bearings as they were mounted initially.

Carry out the tightening procedure described in *CRANKSHAFT ASSEMBLY* in this subsection.

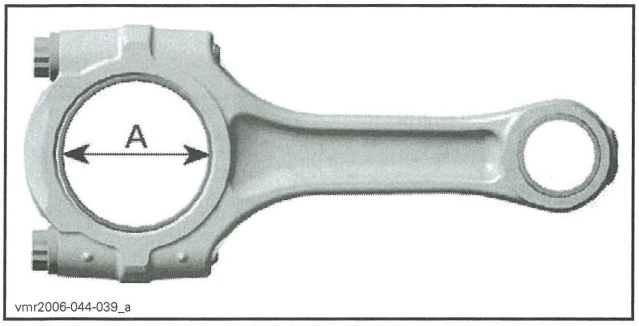

A. Connecting rod big end plain bearing

CONNECTING ROD BIG END DIAMETER		
800R ENGINE	SERVICE LIMIT	40.100 mm (1.5787 in)
1000 ENGINE		42.100 mm (1.6575 in)

If connecting rod big end diameter is out of specification, replace plain bearings and recheck.

CONNECTING ROD BIG END RADIAL CLEARANCE		
800R/1000 ENGINES	SERVICE LIMIT	0.09 mm (.0035 in)

If connecting rod big end radial clearance is out of specification, replace plain bearings and recheck.

Crankshaft Radial Play MAG/PTO Side

Measure crankshaft on MAG/PTO side. Compare to inside diameter of MAG/PTO plain bearing (refer to *CRANKCASE*).

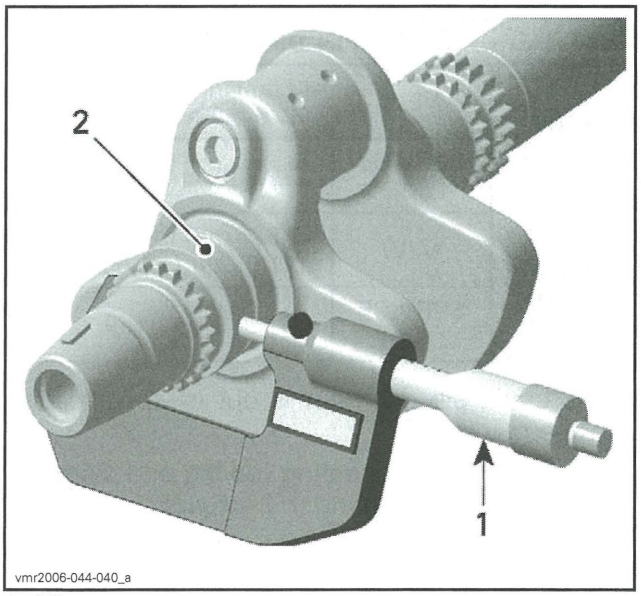

1. *Micrometer*
2. *Crankshaft area for MAG plain bearing*

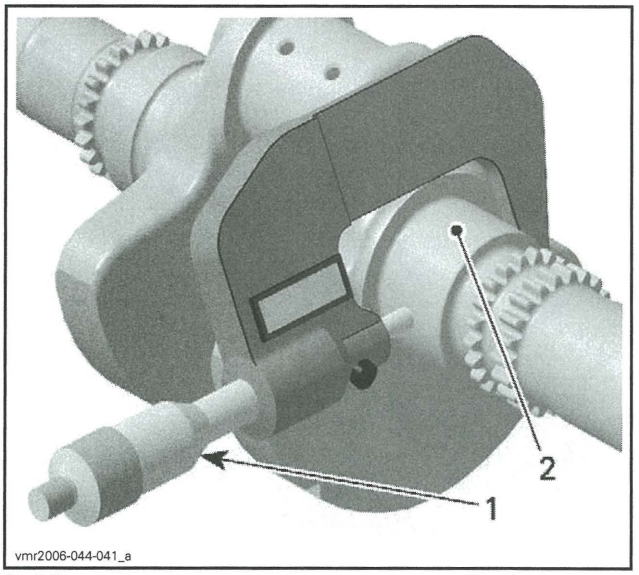

1. *Micrometer*
2. *Crankshaft area for PTO plain bearing*

CRANKSHAFT MAIN BEARING JOURNAL DIAMETER (MAG/PTO SIDE)	
NEW	42.016 mm to 42.040 mm (1.6542 in to 1.6551 in)
SERVICE LIMIT	42.000 mm (1.6535 in)

CRANKSHAFT RADIAL PLAY (MAG/PTO SIDE)	
SERVICE LIMIT	0.07 mm (.0028 in)

Crankshaft Radial Play (PTO Cover Bearing)

Measure crankshaft journal diameter (PTO cover bearing). Compare to plain bearing inside diameter (PTO cover). Refer to *PTO COVER* in this subsection.

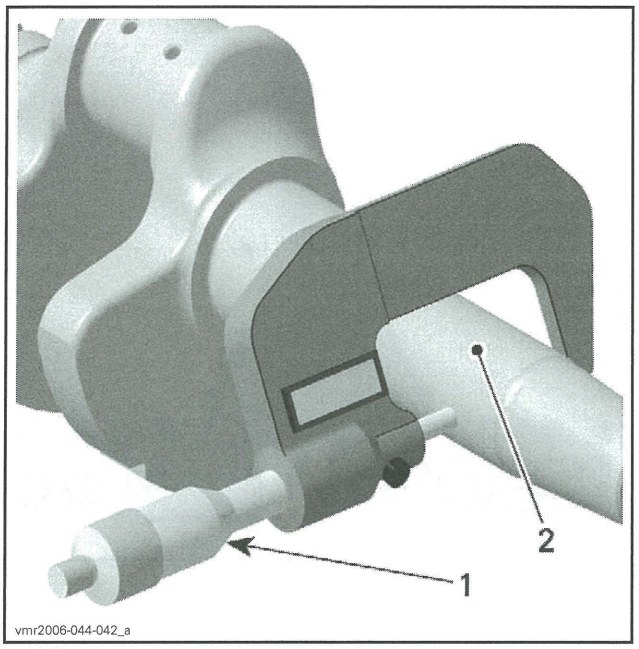

1. *Micrometer*
2. *Crankshaft journal (PTO support bearing)*

CRANKSHAFT JOURNAL DIAMETER (PTO COVER BEARING)	
NEW	34.004 mm to 34.020 mm (1.3387 in to 1.3394 in)
SERVICE LIMIT	33.998 mm (1.3385 in)

CRANKSHAFT RADIAL PLAY (PTO COVER BEARING)	
SERVICE LIMIT	0.10 mm (.0039 in)

If crankshaft journal diameter is out of specification, replace crankshaft.

If crankshaft radial play (PTO cover bearing) out of specification, replace plain bearings and recheck.

Crankshaft Assembly

For assembly, reverse the disassembly procedure. Pay attention to following details.

Clean the split surface on both sides (cracked area) carefully with compressed air.

Put plain bearings correctly in place.

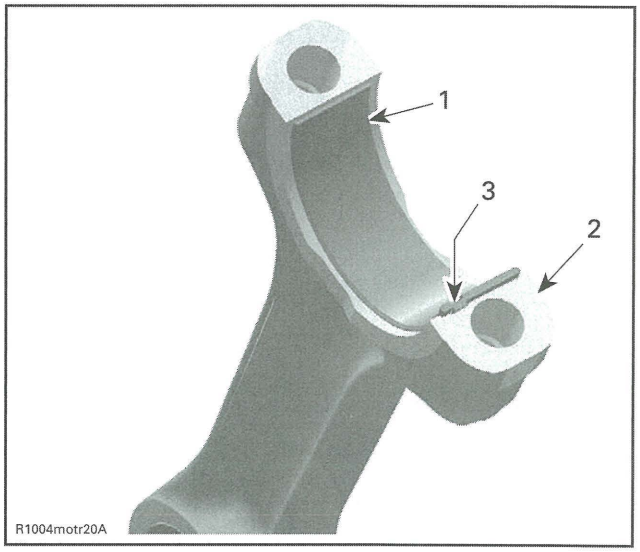

1. *Half plain bearing of connecting rod big end*
2. *Split surface of the connecting rod*
3. *Nose of plain bearing in line with connecting rod groove*

Oil the plain bearing surface of the connecting rod and crank pin before installation.

NOTICE **Lower cap and rod must match together since there is a cracked surface.**

Oil NEW connecting rod screws.

NOTICE **Always use NEW connecting rod screws at final assembly. They are not reusable.**

Thread screws in the connecting rods, then tighten as per following procedure.

NOTICE **Strictly adhere following instructions:**

- Do not apply any thread locker.
- The running direction of the big end bearings and of the piston pins must not change.
- Always perform each step on both connecting rod screws before going to the next step.
- Failure to strictly follow procedure may cause connecting rod screws to loosen and lead to severe engine damage.

REQUIRED TOOLS
Torque wrench
Angle torque wrench

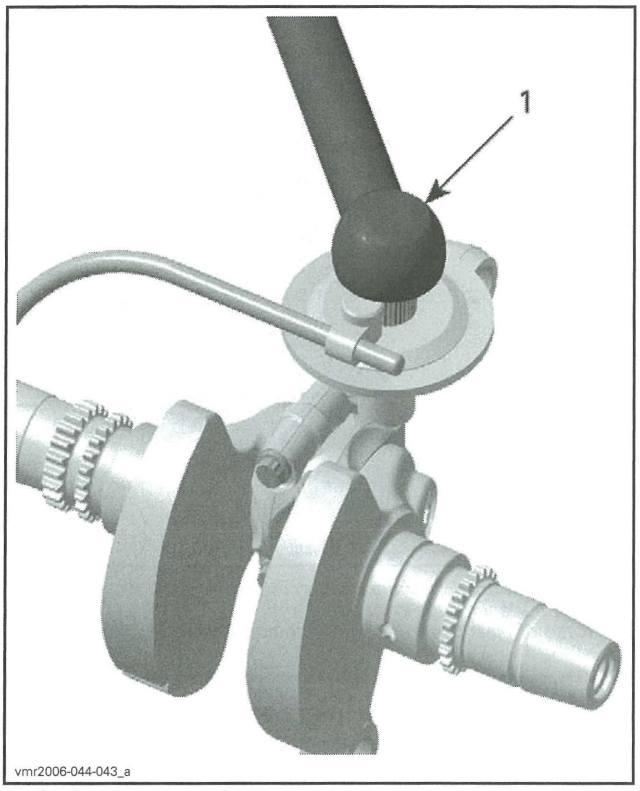

1. Angle torque wrench

800R Engine:

NOTE: NEW connecting rods can be installed either way.

CONNECTING RODS SCREWS TIGHTENING SEQUENCE	
1.	Tighten to 1/2 of specified torque
2.	Tighten to 20 N•m ± 2 N•m (15 lbf•ft ± 1 lbf•ft)
3.	Torque by an additional 60 ± 5° turn using an angle torque wrench

1000 Engine:

NOTICE **Connecting rods are asymmetric. There must be no gap between the small ends when they face each other.**

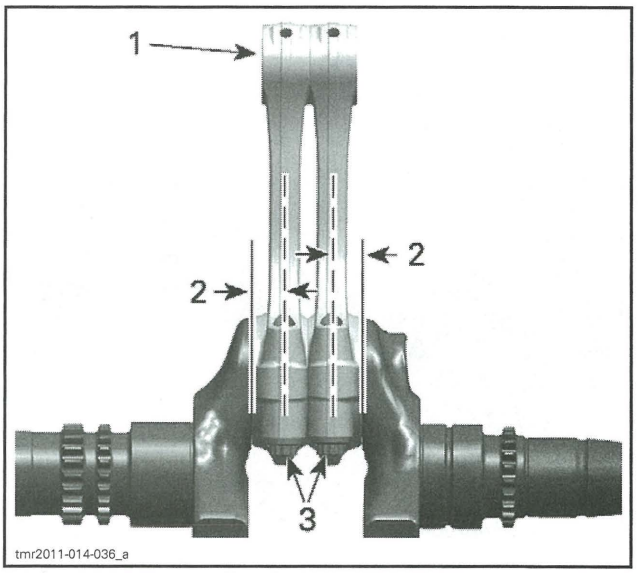

1. Connecting rod small ends
2. Connecting rod offset
3. Connecting rod screws

CONNECTING RODS SCREWS TIGHTENING SEQUENCE	
1.	Tighten to 1/2 of specified torque
2.	Tighten to 30 N•m ± 2 N•m (22 lbf•ft ± 1 lbf•ft)
3.	Torque by an additional 90 ± 5° turn using an angle torque wrench

Crankshaft Installation

For installation of crankshaft in crankcase reverse the removal procedure. Pay attention to the following details.

Do not mix up the connecting rods of cylinders 1 and 2 during installation.

NOTICE **Observe the correct installation position when fitting the crankshaft with the connecting rods. The connecting rod MAG side has to face cylinder no. 1.**

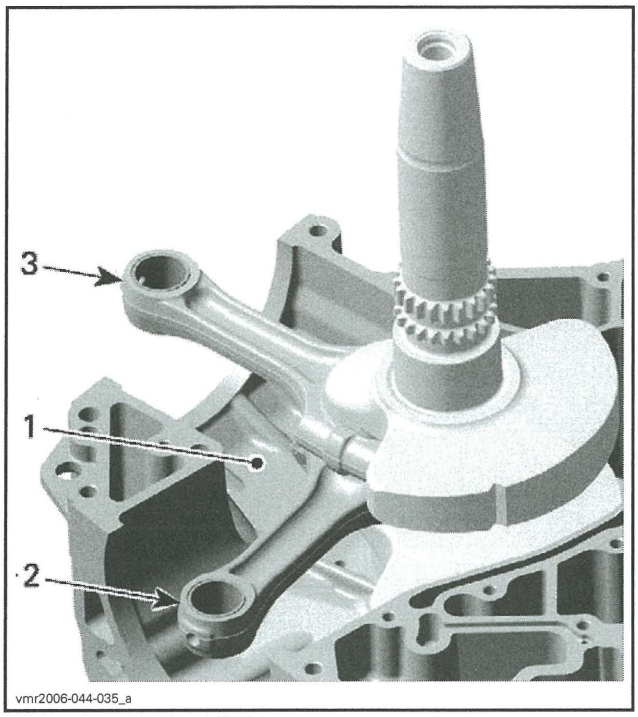

1. *Crankcase half MAG side*
2. *Connecting rod cylinder 1*
3. *Connecting rod cylinder 2*

CONTINUOUSLY VARIABLE TRANSMISSION (CVT)

SERVICE TOOLS

Description	Part Number	Page
CLUTCH HOLDER	529 036 238	166, 173, 179
CLUTCH PULLER	529 035 746	166
PULLER/LOCKING TOOL	529 036 098	165, 180

SERVICE PRODUCTS

Description	Part Number	Page
ISOFLEX GREASE TOPAS NB 52	293 550 021	172
PULLEY FLANGE CLEANER	413 711 809	168, 175, 178

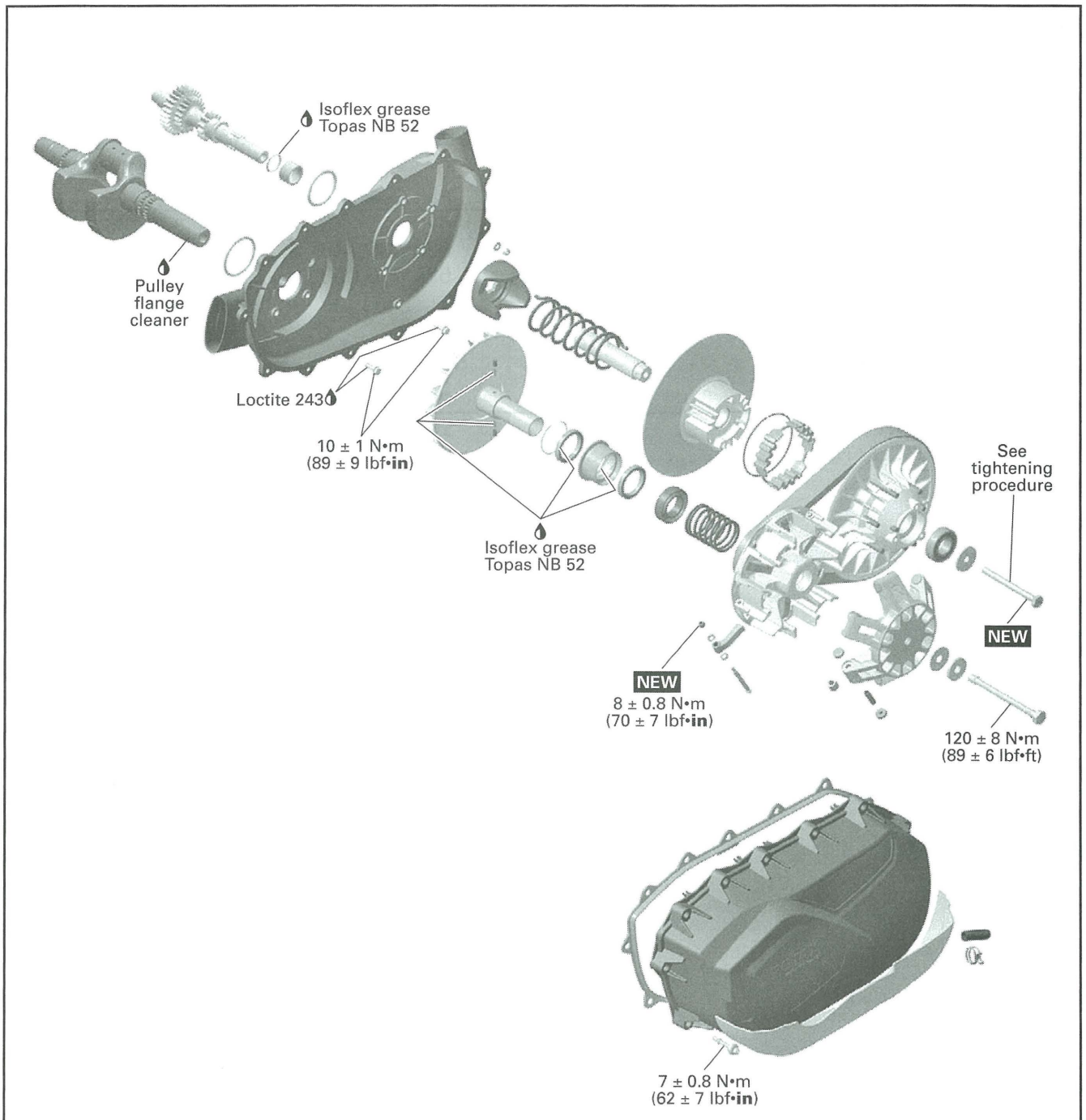

NEW = Component must be replaced when removed.

tmr2013-019-001_a

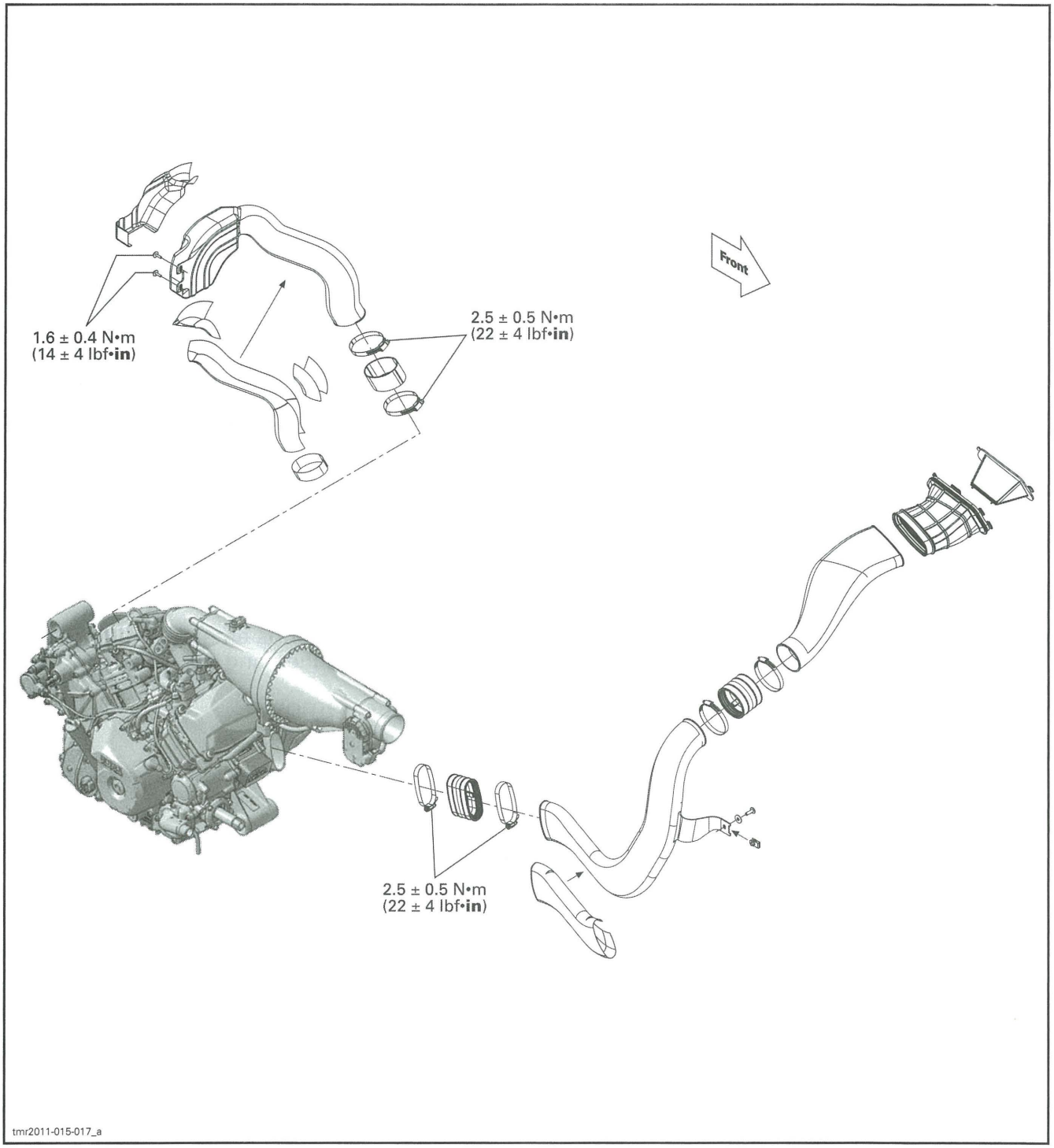
1.6 ± 0.4 N•m
(14 ± 4 lbf•in)
2.5 ± 0.5 N•m
(22 ± 4 lbf•in)
Front
2.5 ± 0.5 N•m
(22 ± 4 lbf•in)
tmr2011-015-017_a

GENERAL

NOTE: For a better understanding, the following illustrations are taken with engine out of vehicle. To perform the following instructions, it is not necessary to remove engine.

This CVT is lubrication free. Never lubricate any components except drive pulley one-way clutch.

⚠ WARNING

Never touch CVT while engine is running. Never drive vehicle when CVT cover is removed.

⚠ WARNING

Any drive pulley repairs must be performed by an authorized Can-Am dealer. Subcomponent installation and assembly tolerances require strict adherence to procedures detailed.

⚠ WARNING

The clutch assembly is a precisely balanced unit. Never replace parts with used parts from another clutch assembly.

PROCEDURES

CVT COVER

CVT Cover Access

1. Refer to *BODY* and remove:
   - LH seat
   - LH lateral console panel.
2. Remove under seat storage compartment.

NOTE: The CVT cover lower screws are accessible through the square holes in the central skid plate.

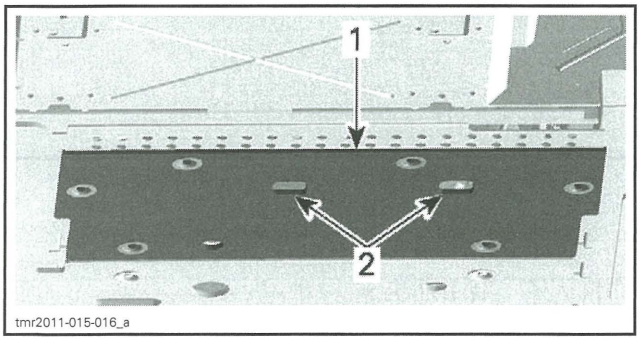

1. Central skid plate
2. Access holes

CVT Cover Draining

If water is present in CVT cover, it can be drained as follows:

1. Remove drain reservoir from CVT cover.

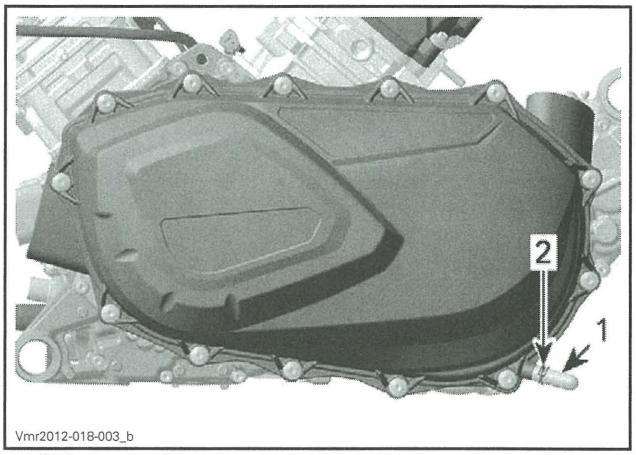

1. Drain reservoir
2. Spring clip

2. Let water drain from CVT cover.
3. Reinstall drain reservoir.

NOTICE **If any debris entered the CVT cover, CVT must be cleaned and inspected.**

CVT Cover Removal

Remove CVT cover screws.

NOTE: Remove the center top screw last to support the cover during removal.

NOTE: Do not use and impact tool to remove CVT cover screws.

Remove the CVT cover and its gasket.

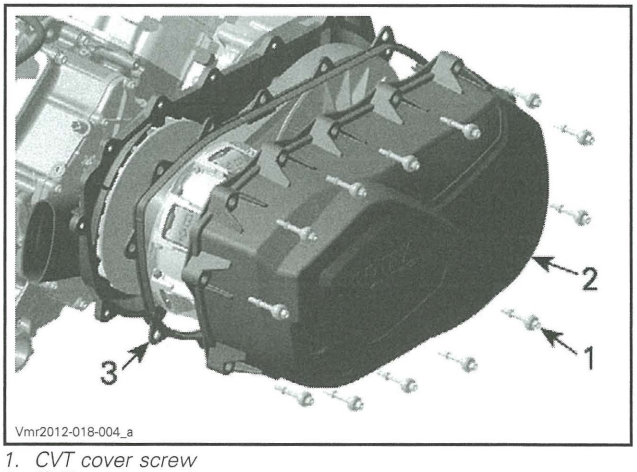

1. CVT cover screw
2. CVT cover
3. Gasket

CVT Cover Installation

Install the center top screw of first.

Tighten the CVT cover screws as per following sequence.

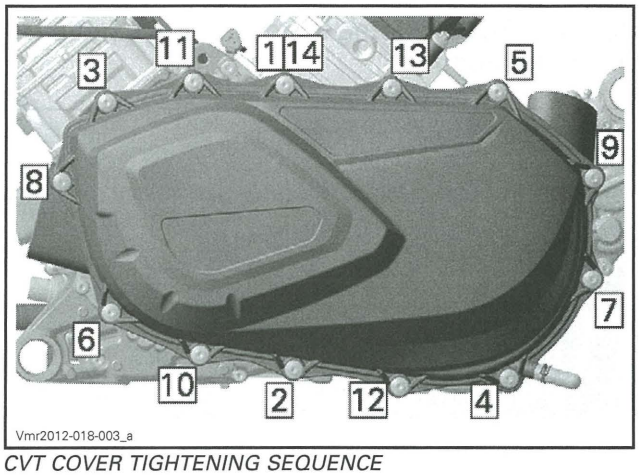

CVT COVER TIGHTENING SEQUENCE

CVT COVER SCREWS	
Tightening torque	7 N•m ± 0.8 N•m (62 lbf•**in** ± 7 lbf•**in**)

DRIVE BELT

Drive Belt Removal

NOTICE In case of a drive belt failure, the CVT, cover and air outlet must be cleaned.

Remove *CVT COVER*.

Open driven pulley.

REQUIRED TOOL	
PULLER/LOCKING TOOL (P/N 529 036 098)	

Screw tool in the threaded hole of driven pulley and tighten to open the pulley.

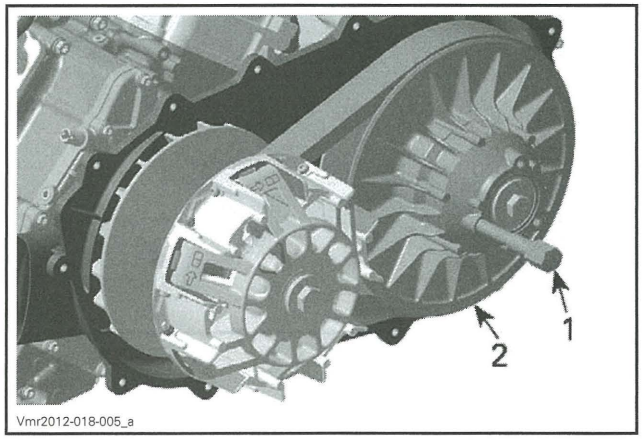

TYPICAL
1. *Puller/locking tool*
2. *Fixed sheave of driven pulley*

To remove belt, slip the belt over the top edge of fixed sheave, as shown.

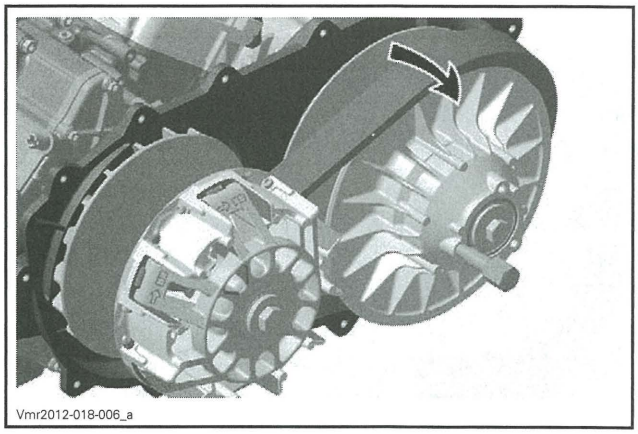

Drive Belt Inspection

For drive belt inspection refer to *DRIVE BELT INSPECTION* in the *PERIODIC MAINTENANCE PROCEDURES* subsection.

Drive Belt Installation

For installation, reverse the removal procedure. Pay attention to following details.

The maximum drive belt life span is obtained when the drive belt has the proper rotation direction. Install it so that the arrow printed on belt is pointing towards front of the vehicle, viewed from top.

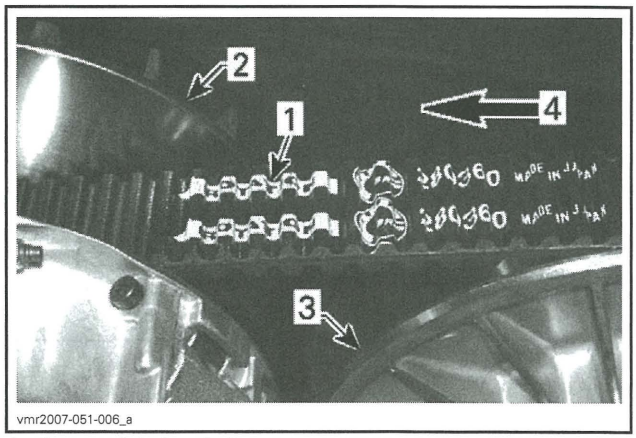

1. *Arrow printed on belt*
2. *Drive pulley (front)*
3. *Driven pulley (rear)*
4. *Rotation direction*

DRIVE PULLEY

Drive Pulley Removal

1. Remove *DRIVE BELT*, see procedure in this subsection.

2. Prior to removing the drive pulley, mark sliding sheave and governor cup to ensure correct indexation at reinstallation.

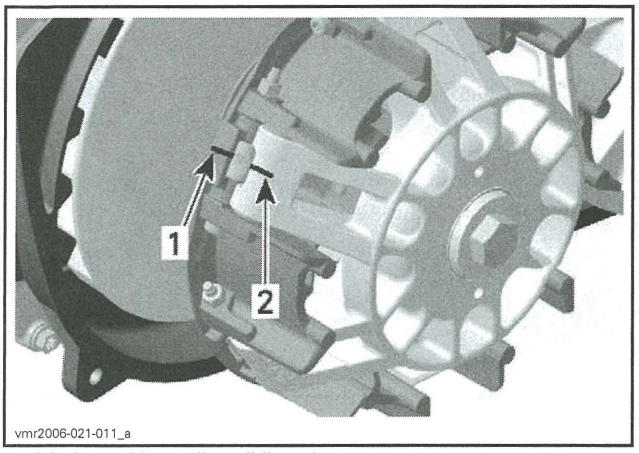

1. Mark on drive pulley sliding sheave
2. Mark on governor cup

3. Lock the drive pulley.

REQUIRED TOOL	
CLUTCH HOLDER (P/N 529 036 238)	

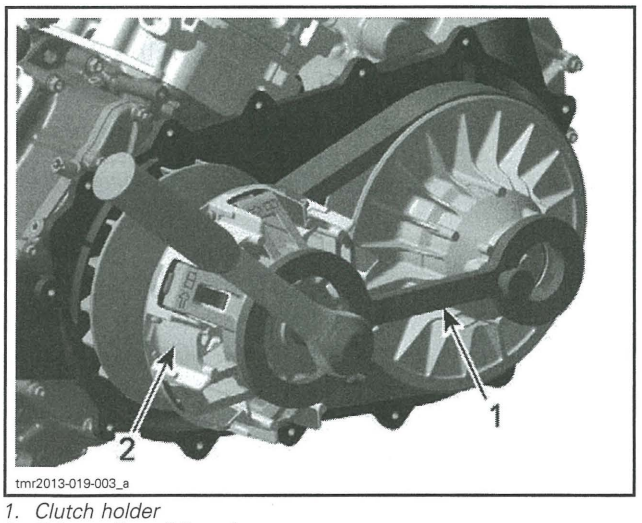

1. Clutch holder
2. Drive pulley sliding sheave

4. Loosen the drive pulley screw.

NOTICE **Never use any type of impact wrench for drive pulley removal.**

NOTE: Do not unscrew the drive pulley screw completely. If governor cup is stuck, hit it using a soft hammer.

5. Remove service tool.
6. Apply axial pressure with your hand on the sliding sheave and governor cup.
7. Remove drive pulley screw with its conical spring washer and thrust washer.

⚠ CAUTION **Sliding sheave of drive pulley is spring loaded.**

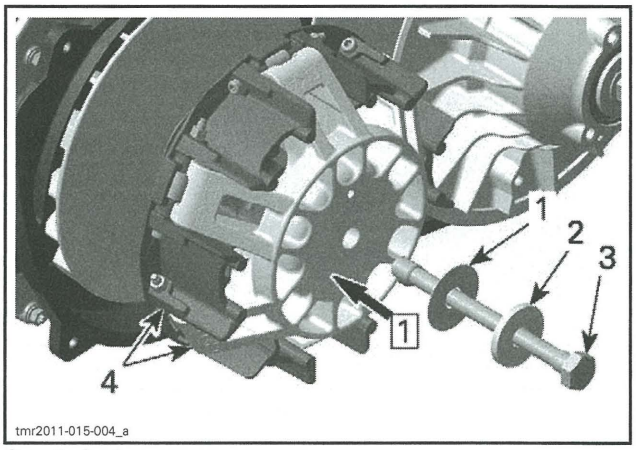

Step 1: Push

1. Thrust washer
2. Conical spring washer
3. Drive pulley screw
4. Sliding sheave with governor cup

8. Slowly release and remove sliding sheave.
9. Screw clutch puller in fixed sheave to remove fixed pulley.

NOTICE **Use only recommended tool.**

REQUIRED TOOL	
CLUTCH PULLER (P/N 529 035 746)	

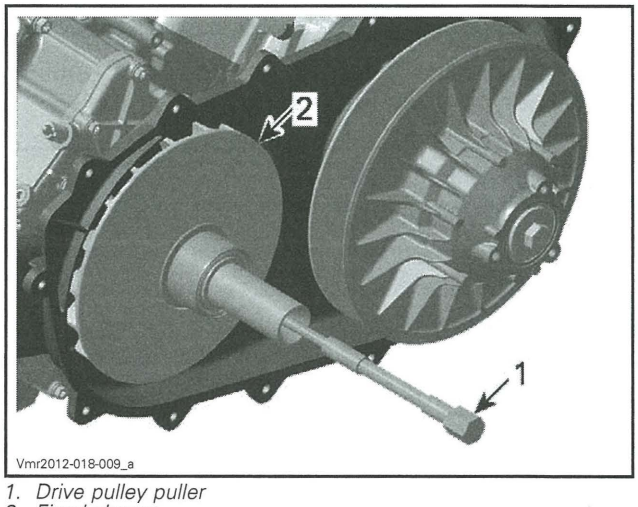

1. Drive pulley puller
2. Fixed sheave

Drive Pulley Disassembly

Governor Cup

Carefully lift governor cup until slider shoes come at their highest position into guides.

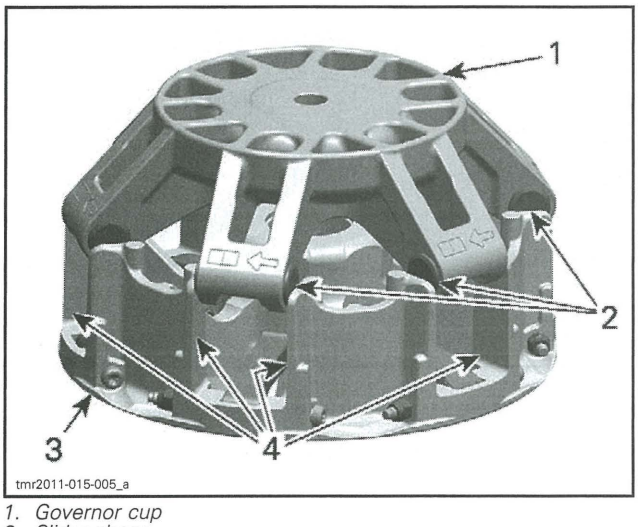

1. *Governor cup*
2. *Slider shoes*
3. *Sliding shave*
4. *Guides*

NOTE: The following procedure is not necessary except if roller must be removed. Refer to *INSPECTION* before proceeding.

Remove slider shoes out of each bearing sleeve. Use a flat screwdriver if necessary.

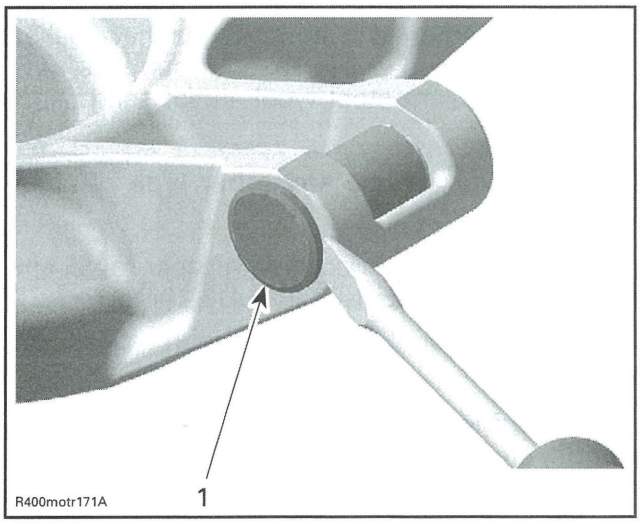

1. *Slider shoe*

Put governor cup on a vice to push out bearing sleeve of roller in the foreseen direction (against arrow). Use an appropriate punch (diameter of punch must be smaller than the bearing sleeve diameter).

NOTICE Do not clamp the governor cup in the vice to push out bearing sleeve. Governor cup will be damaged.

NOTE: Use protection plates to avoid marks and/or damages to the governor cup.

NOTICE Always replace all rollers at the same time. Partly worn rollers may cause damage to the CVT system.

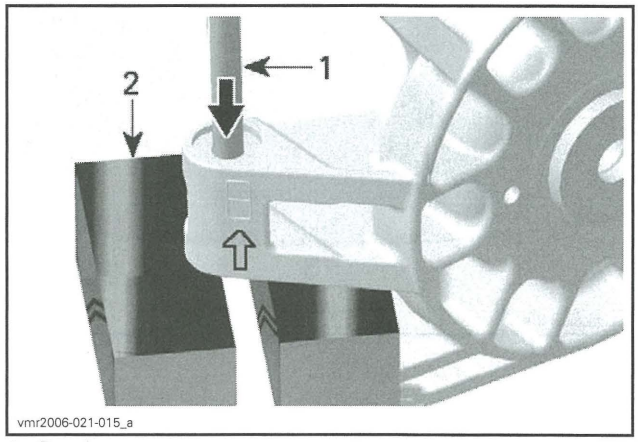

1. *Punch*
2. *Vice*

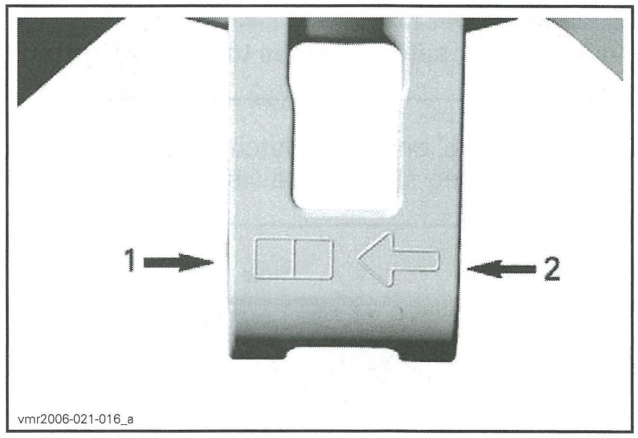

1. *Removal direction*
2. *Assembly direction*

NOTE: Whenever removing a governor cup with already two marked boxes replace it by a new one.

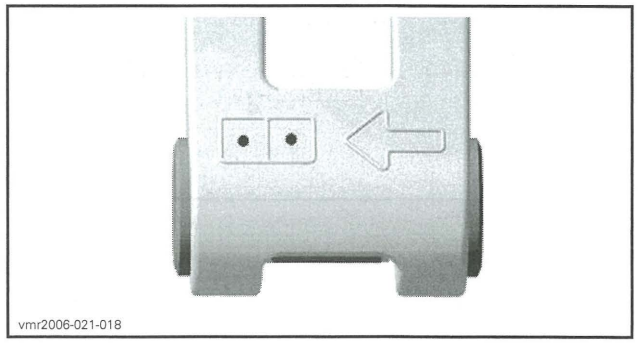

Sliding Sheave

Unscrew lock nut and remove centrifugal lever pivot bolt. This drive pulley is equipped with 6 levers.

Remove centrifugal lever and both thrust washers.

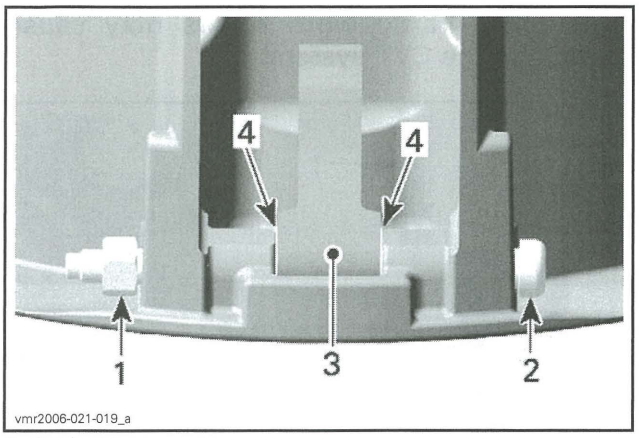

1. *Lock nut*
2. *Centrifugal lever pivot bolt*
3. *Centrifugal lever*
4. *Thrust washers*

Fixed Sheave

⚠ WARNING

Always wear safety glasses to remove spring sleeves.

Pull and rotate one-way clutch slowly until the sheave of spring sleeves are visible.

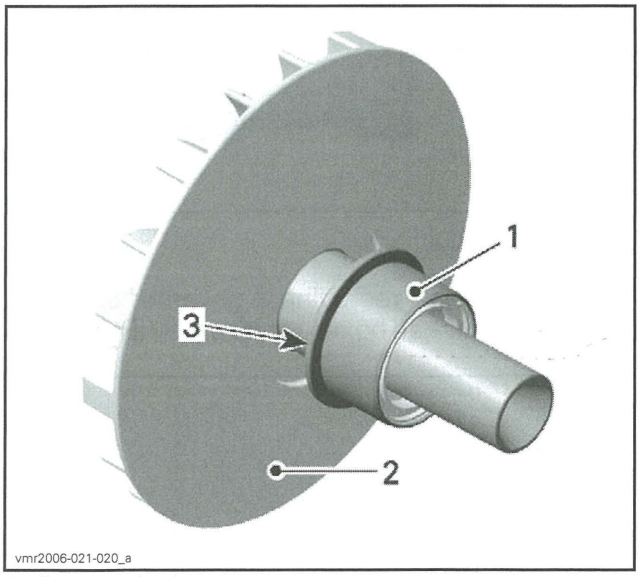

1. *One-way clutch*
2. *Fixed sheave*
3. *Spring sleeve area*

Hold both spring sleeves with fingers and release when one-way clutch is disengaged.

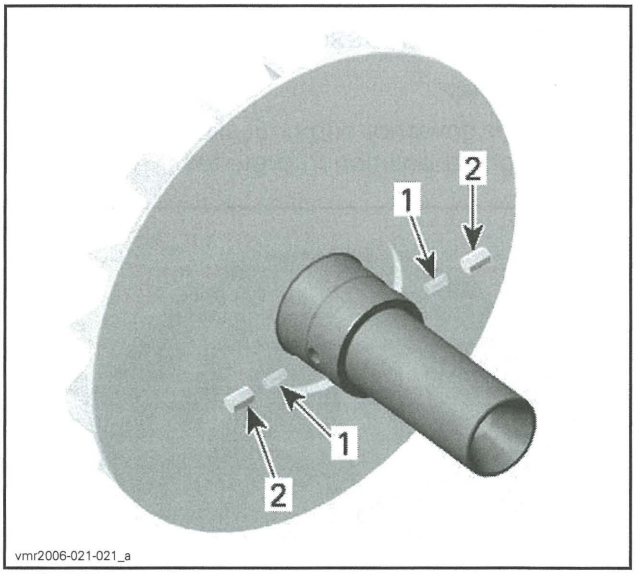

1. *Springs*
2. *Spring sleeves*

Drive Pulley Cleaning

Clean pulley faces and shaft with fine steel wool and dry cloth.

Using a paper towel with PULLEY FLANGE CLEANER (P/N 413 711 809) cleaning solvent, clean crankshaft tapered end and the taper inside the fixed sheave of the drive pulley, crankshaft threads and threads of drive pulley screw.

NOTICE Avoid contact between cleaner and crankshaft seal because damage may occur.

Remove all hardened oil deposits that have baked on crankshaft and pulley tapered surfaces with coarse or medium steel wool and/or sand paper no. 600.

NOTICE Do not use any other type of abrasive.

Reclean mounting surfaces with paper towel and PULLEY FLANGE CLEANER (P/N 413 711 809).

Wipe off the mounting surfaces with a clean, dry paper towel.

NOTICE Mounting surfaces must be free of any oil, cleaner or towel residue.

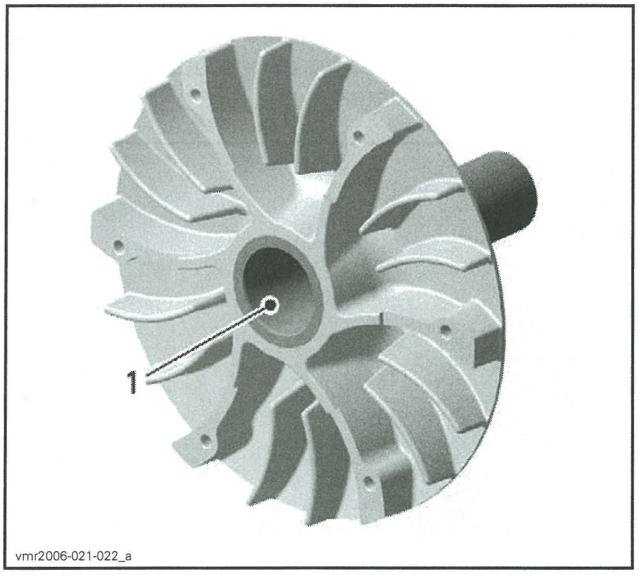

1. Taper of fixed sheave

Only use petrol base cleaner when cleaning bushings of sliding sheave.

NOTICE **Do not use acetone to clean bushing.**

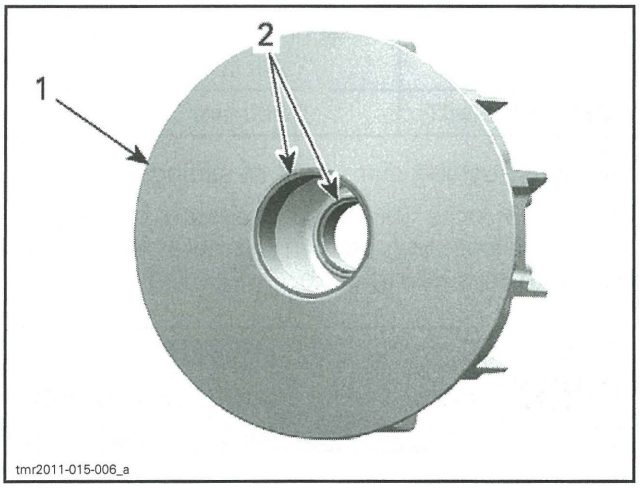

1. Sliding sheave
2. Bushings

Drive Pulley Inspection

Bushings

For bushing inspection, refer to *SLIDING SHEAVE* in this subsection.

Governor Cup

Check governor cup for cracks or other visible damage. Replace if necessary.

Roller and Slider Shoe

Check each roller for roundness of external diameter.

Check if rollers move freely.

NOTICE **Whenever replacing rollers and slider shoes, always replace all rollers and slider shoes at the same time.**

Check slider shoes for visible wear and replace if damaged.

NOTE: If necessary, use a screwdriver to remove slider shoes.

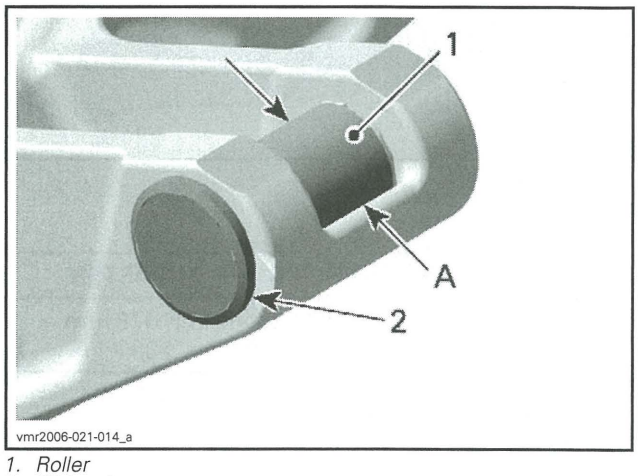

1. Roller
2. Slider shoe
A. Roller outer diameter

ROLLER OUTER DIAMETER	
NEW	13.70 mm to 13.80 mm (.539 in to .543 in)
SERVICE LIMIT	13.20 mm (.519 in)
ROLLER INNER DIAMETER	
NEW	8.05 to 8.15 mm (.317 to .321 in)
SERVICE LIMIT	9 mm (.354 in)

Centrifugal Lever Pivot Bolt

Measure diameter of centrifugal lever pivot bolt, replace if it is out of specification.

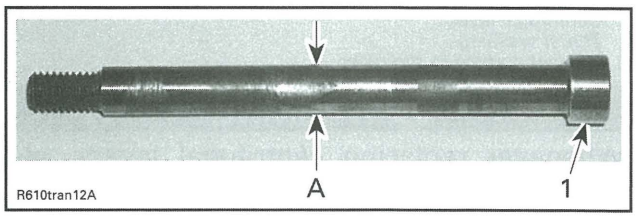

1. Centrifugal lever pivot bolt
A. Measure diameter here

CENTRIFUGAL LEVER PIVOT BOLT DIAMETER	
NEW	6.078 mm to 6.100 mm (.239 in to .24 in)
SERVICE LIMIT	6.00 mm (.236 in)

Centrifugal Lever

Check bushing diameter in the centrifugal lever for wear. Replace centrifugal lever if necessary.

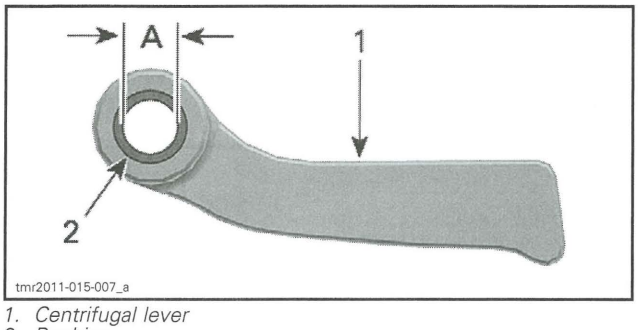

1. Centrifugal lever
2. Bushing
A. Bushing inner diameter

CENTRIFUGAL LEVER BORE DIAMETER	
NEW	6.035 mm to 6.078 mm (.238 in to .239 in)
SERVICE LIMIT	6.200 mm (.244 in)

Replace centrifugal lever, thrust washers, centrifugal lever pivot bolts and lock nuts if the contact surfaces show heavy visible wear.

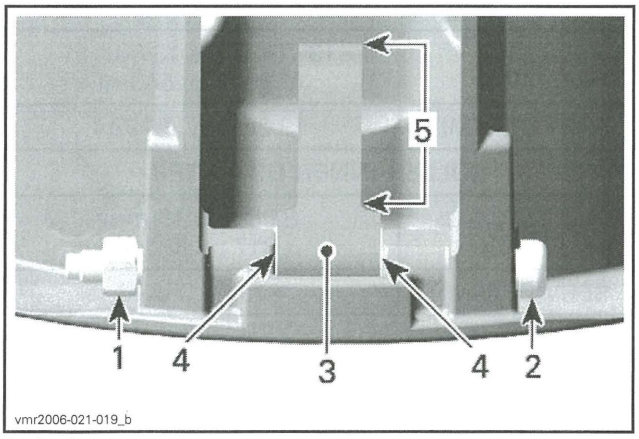

1. Lock nut
2. Centrifugal lever pivot bolt
3. Centrifugal lever
4. Thrust washers
5. Contact surface to the roller

⚠ WARNING

Whenever replacing centrifugal levers, always replace all lever at the same time. Otherwise, unbalanced drive pulley will occur because of levers difference.

Sliding Sheave

Check sliding sheave for cracks and sliding contact surface for excessive wear. Replace sliding sheave if necessary.

Measure centrifugal lever pivot bolt bores. Replace sliding sheave if bores are out of specification or otherwise damaged.

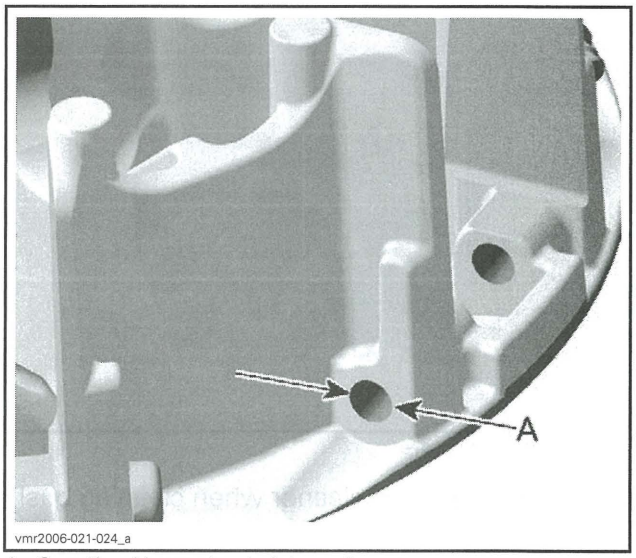

A. Centrifugal lever pivot bolt bore diameter

CENTRIFUGAL LEVER PIVOT BOLT BORE DIAMETER	
NEW	6.113 mm to 6.171 mm (.241 in to .243 in)
SERVICE LIMIT	6.300 mm (.248 in)

Measure bushing diameters of sliding sheave.

Use a dial bore gauge to measure bushing diameter. Measuring point must be at least 5 mm (1/4 in) from bushing edge.

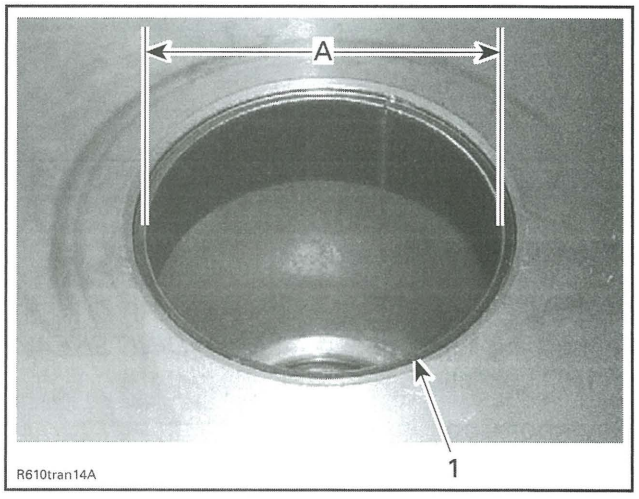

1. Bushing on fixed sheave side
A. Bore diameter of bushing

SLIDING SHEAVE LARGE BUSHING	
NEW	55.000 mm to 55.040 mm (2.165 in to 2.167 in)
SERVICE LIMIT	55.200 mm (2.173 in)

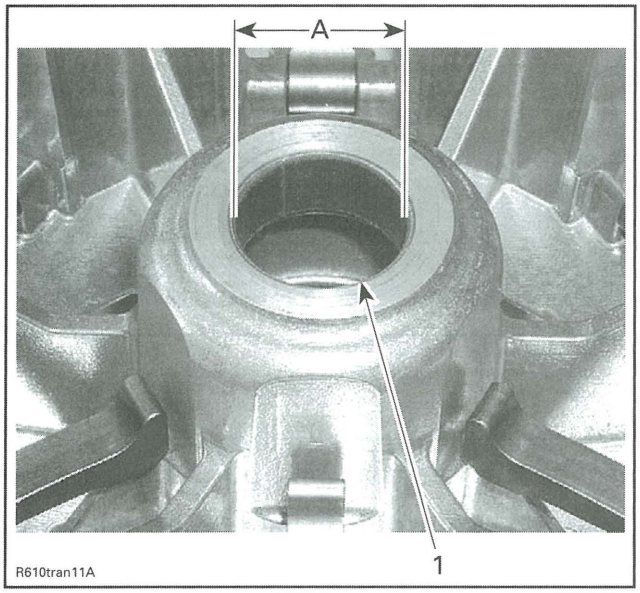

1. Bushing on governor cup side
A. Bore diameter of bushing

SLIDING SHEAVE SMALL BUSHING	
NEW	32.000 mm to 32.040 mm (1.26 in to 1.261 in)
SERVICE LIMIT	32.200 mm (1.268 in)

Replace sliding sheave if one of the bushings is out of specification. Visually inspect coatings.

Fixed Sheave

Check fixed sheave contact surface to the governor cup for scratches or other damages. If so, replace fixed sheave.

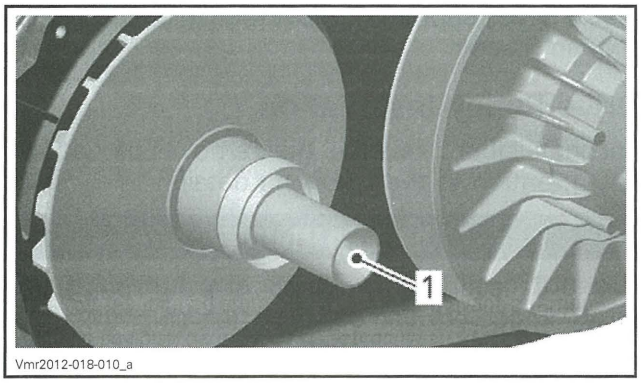

1. Visually check here

Check for any marks on fixed sheave plate. Replace if necessary.

Spring

Measure spring free length and squareness. If spring is out of specification, replace by a new one.

CLUTCH SPRING SQUARENESS	
SERVICE LIMIT	4 mm (.157 in)

One-Way Clutch

Check bearings for excessive play and smooth operation. Replace one-way clutch bearings if necessary.

NOTICE Be careful not to damage the inside of one-way clutch during bearing removal.

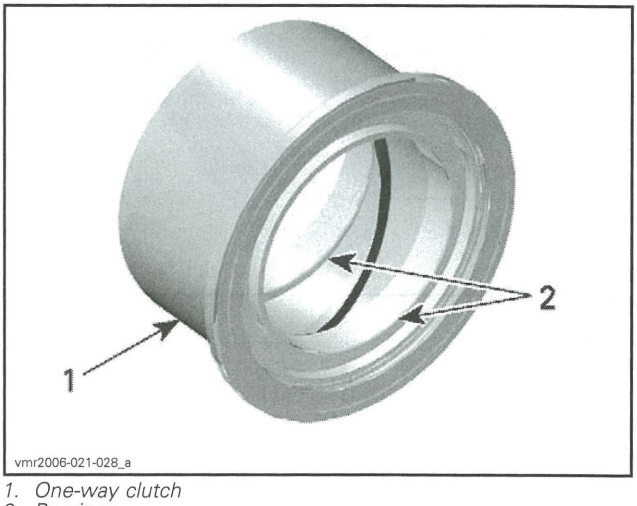

1. One-way clutch
2. Bearings

Measure length of spring sleeves and check if edges on top of the spring sleeve are excessively worn. If they out of specifications, replace both spring sleeves at the same time.

SPRING SLEEVE LENGTH	
NEW	9.2 mm to 9.4 mm (.362 in to .37 in)
SERVICE LIMIT	9 mm (.354 in)

Drive Pulley Assembly

For assembly, reverse the disassembly procedure. Pay attention to following details.

One-Way Clutch

Clean parts.

Lubricate springs, spring sleeves and between one way clutch bearings using ISOFLEX GREASE TOPAS NB 52 (P/N 293 550 021). Push grease inside bearings to ensure adequate lubrication.

NOTE: Ball bearings have a seal on one side only. Install bearings with the seal towards the outside of the one-way clutch.

NOTE: Apply ISOFLEX GREASE TOPAS NB 52 (P/N 293 550 021) inside ball bearings to ensure adequate lubrication.

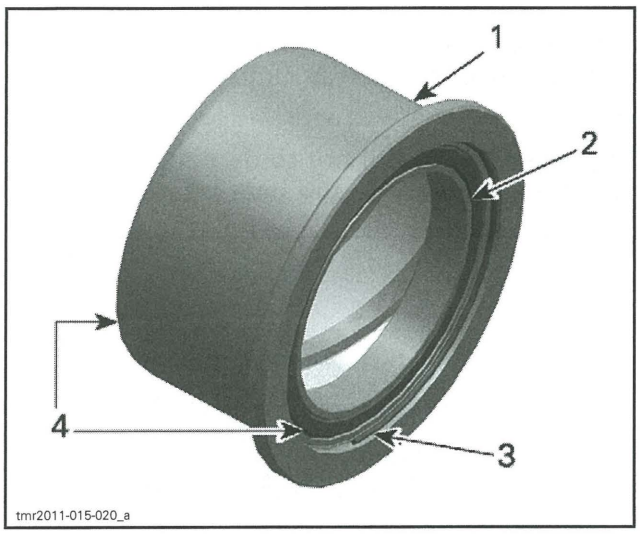

1. *One-way clutch*
2. *Bearing*
3. *Retaining ring*
4. *Seal*

Sliding Sheave

Install centrifugal levers with their thrust washers.

NOTICE **Centrifugal levers must move easily after installation.**

Governor Cup

Rebuild governor cup with new bearing sleeves, thrust washers, rollers and slider shoes.

NOTICE **Final position has to be aligned with the contact surface of the slider shoes (no protrusion).**

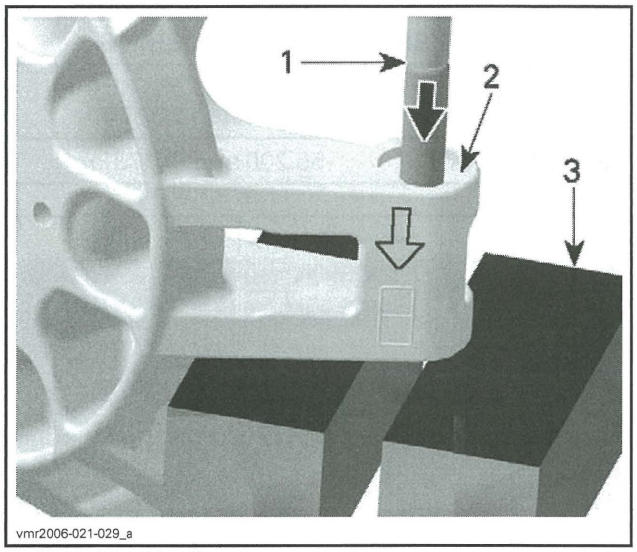

1. *Top edge of bearing sleeve*
2. *Mating surface of slider shoes*
3. *Vice*

Each time when replacing the bearing sleeves sign the foreseen box with a punch.

NOTICE **Do not tap too hard. Violent damage of the governor cup may appear.**

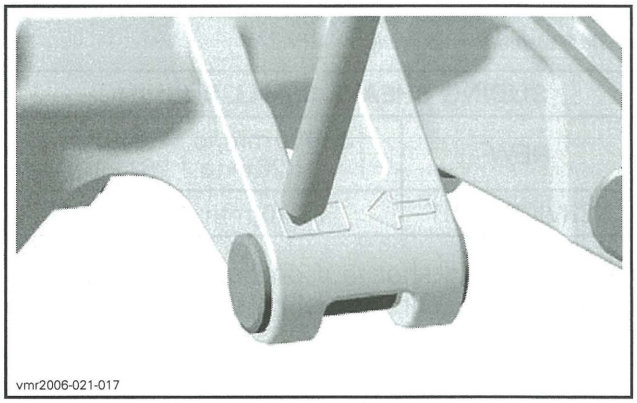

NOTICE **Rollers must move easily after installation.**

Insert slider shoes into governor cup to properly slide in guides.

Drive Pulley Installation

For installation, reverse the removal procedure. Pay attention to the following details.

⚠ WARNING

Do not apply antiseize or any lubricant on crankshaft and drive pulley tapers.

NOTICE **Never use any type of impact wrench at drive pulley removal and installation.**

Clean mounting surfaces as described in *CLEANING* above.

Install drive pulley on crankshaft extension.

NOTICE **Do not forget to place thrust washer prior to install conical spring washer.**

Install conical spring washer with its concave side towards drive pulley then install drive pulley screw.

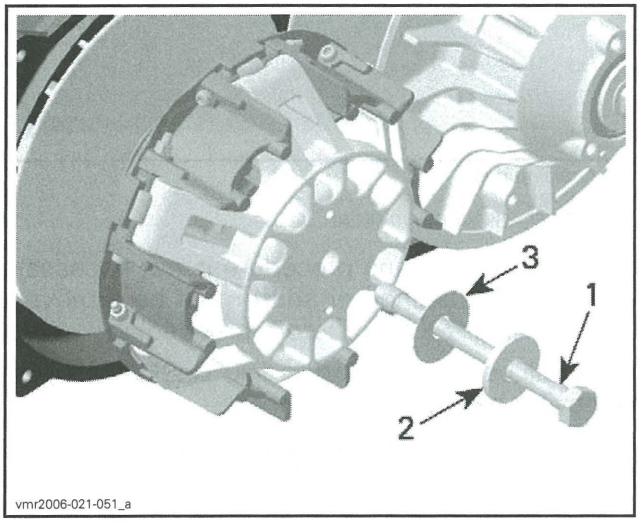

1. *Drive pulley screw*
2. *Conical spring washer*
3. *Thrust washer*

⚠ WARNING

Never substitute conical spring washer and/or screw with jobber ones. Always use BRP genuine parts for this particular case.

Lock the drive pulley as per removal procedure.

Tighten drive pulley screw to specified torque.

NOTICE **Never use any type of impact wrench for drive pulley installation.**

DRIVE PULLEY SCREW	
Tightening torque	120 N•m ± 8 N•m (89 lbf•ft ± 6 lbf•ft)

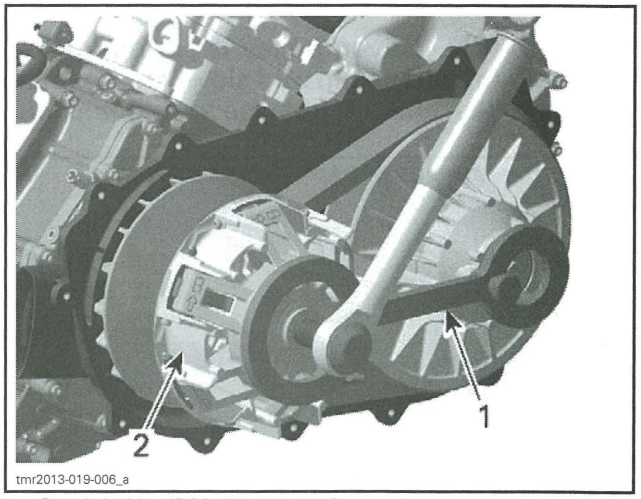

1. *Clutch holder (P/N 529 036 238)*
2. *Drive pulley*

DRIVEN PULLEY

Driven Pulley Removal

Remove *DRIVE BELT*.

Hold the driven pulley and loosen the driven pulley screw.

NOTE: Do not unscrew the driven pulley screw completely.

REQUIRED TOOL	
CLUTCH HOLDER (P/N 529 036 238)	

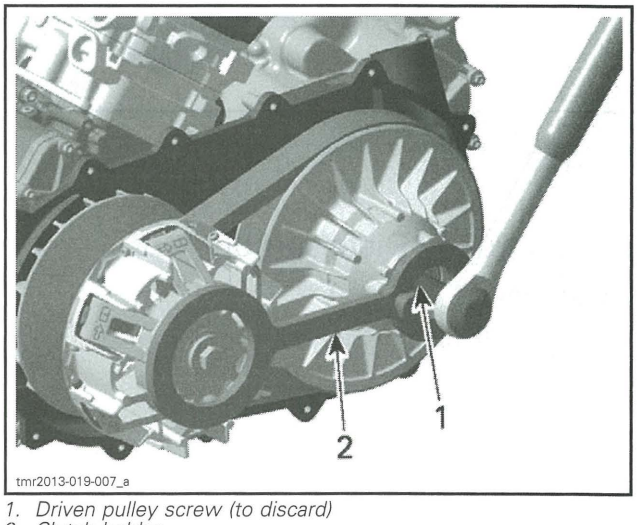

1. *Driven pulley screw (to discard)*
2. *Clutch holder*

Remove service tool.

Apply axial pressure with your hand on driven pulley and maintain during screw removal.

Remove driven pulley screw and washer.

Discard screw.

⚠ CAUTION Driven pulley is spring loaded. Hold driven pulley tight and slowly remove the driven pulley screw to release spring tension.

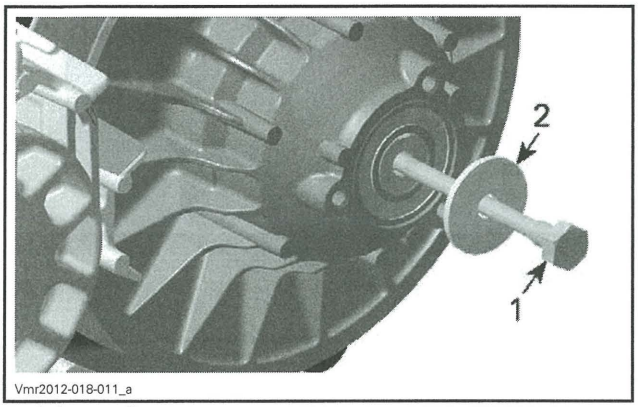

1. *Driven pulley screw*
2. *Thrust washer*

Remove the driven pulley with the spring and the cam.

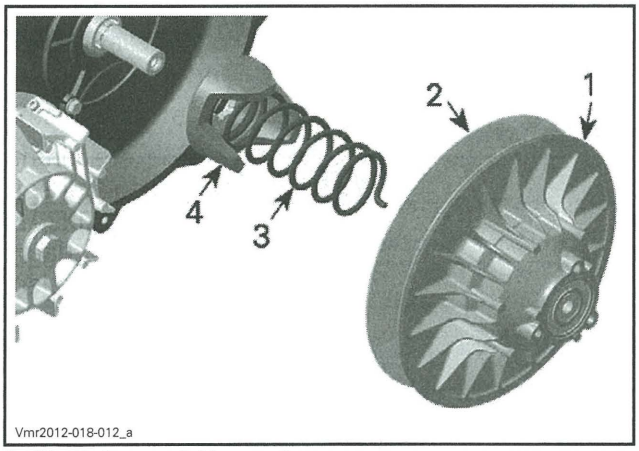

1. *Fixed sheave of driven pulley*
2. *Sliding sheave of driven pulley*
3. *Spring*
4. *Cam*

Driven Pulley Disassembly

Fixed Sheave

Remove retaining ring and lift torque gear.

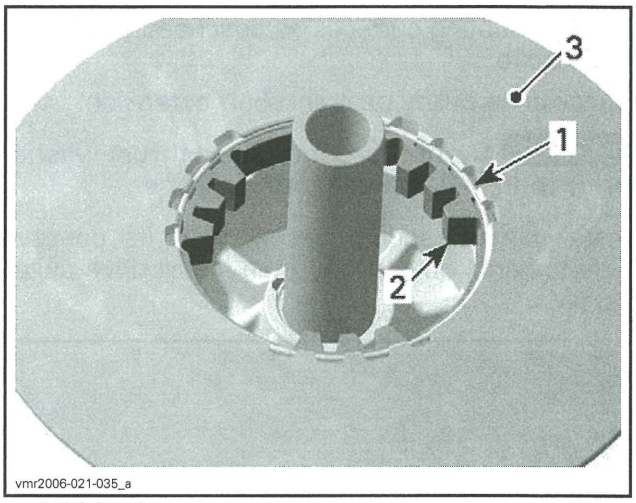

1. *Retaining ring*
2. *Torque gear*
3. *Fixed sheave of driven pulley*

NOTE: The following procedure is not necessary except if ball bearing or shaft must be removed. Refer to *INSPECTION* before proceeding.

Heat ball bearing area up to 100°C (212°F) before removing ball bearing.

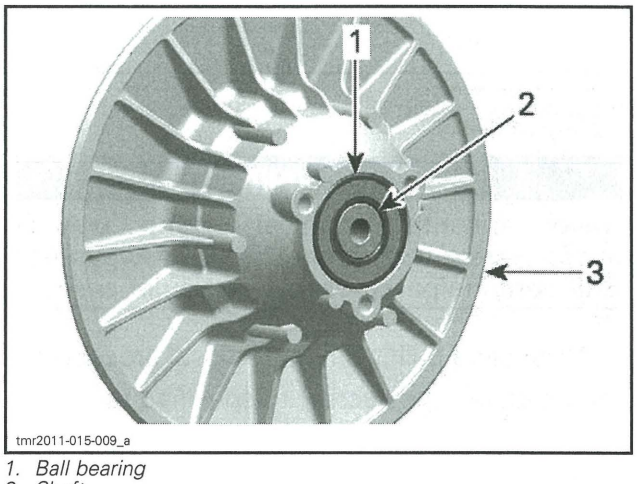

1. *Ball bearing*
2. *Shaft*
3. *Fixed sheave of driven pulley*

Use a soft hammer to push shaft with bearing out of fixed sheave.

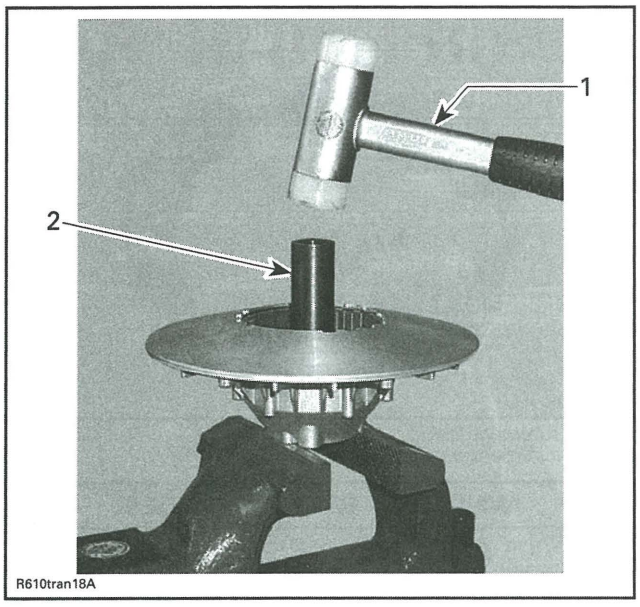

1. *Soft hammer*
2. *Shaft*

Remove shaft from ball bearing.

Remove distance sleeve and O-ring from countershaft.

Replace O-ring if brittle, hard or damaged.

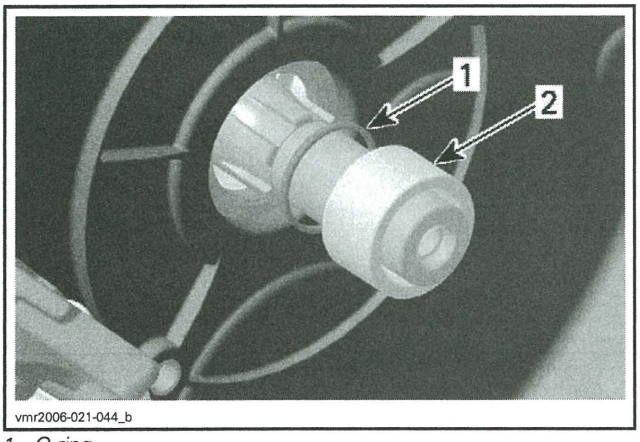

1. *O-ring*
2. *Distance sleeve*

Driven Pulley Cleaning

When a dust deposit has to be removed from the cam or the shaft, use dry cloth.

Clean pulley faces and shaft with fine steel wool and dry cloth.

Use PULLEY FLANGE CLEANER (P/N 413 711 809) to clean driven pulley.

Clean the CVT air guide area from contamination.

Using a paper towel with PULLEY FLANGE CLEANER (P/N 413 711 809) to clean countershaft end and the inside of the shaft.

NOTICE To avoid damage, make sure cleaner does not contact the countershaft oil seal.

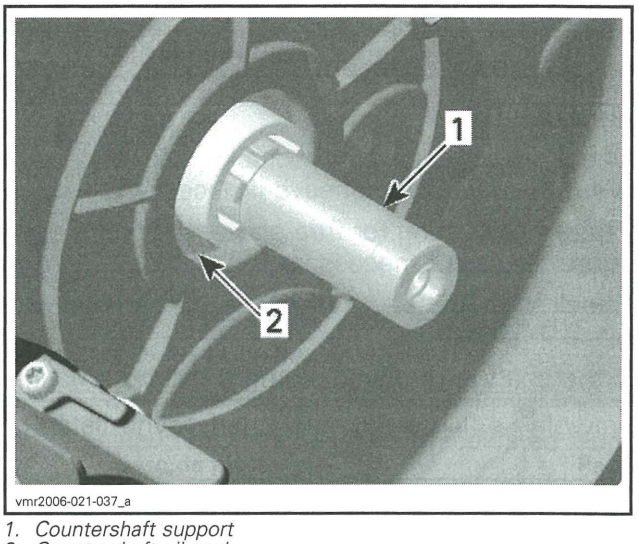

1. *Countershaft support*
2. *Countershaft oil seal*

Driven Pulley Inspection

Sliding Sheave

Check sliding sheave for cracks and sliding contact surface for excessive wear. Replace sliding sheave if necessary.

Check bushings for cracks, scratch and for free movement when assembled to sliding sheave.

Using a dial bore gauge measure bushing diameter. Measuring point must be at least 5 mm (1/4 in) from bushing edge.

This bushing can not be replaced. Replace sliding sheave if bushings are out of specification. Visually inspect coatings.

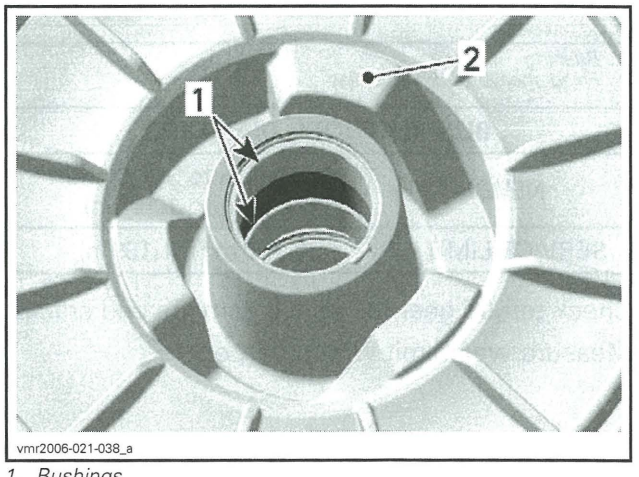

1. *Bushings*
2. *Backside of sliding sheave of driven pulley*

BUSHINGS BORE DIAMETER	
NEW	30.060 mm to 30.100 mm (1.183 in to 1.185 in)
SERVICE LIMIT	30.200 mm (1.189 in)

Fixed Sheave

Check fixed sheave for cracks and excessive wear. Replace fixed sheave if necessary.

Check ball bearing for free play and smooth operation. Replace if necessary.

Check shaft for heavy wear or visible damage. Replace if necessary.

If the shaft is removed, using a dial bore gauge, measure bushing diameter. Measuring point must be at least 5 mm (1/4 in) from bushing edge.

This bushing can not be replaced. Replace fixed sheave if bushing is out of specification. Visually inspect coatings.

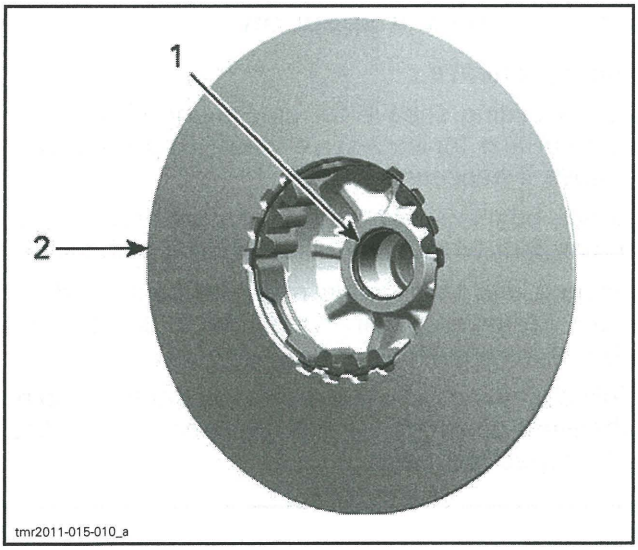

1. Bushing
2. Fixed sheave of driven pulley

BUSHING BORE DIAMETER	
NEW	30.060 mm to 30.100 mm (1.183 in to 1.185 in)
SERVICE LIMIT	30.200 mm (1.189 in)

Check torque gear for visible damage and cracks.

Measure wear limit with a caliper.

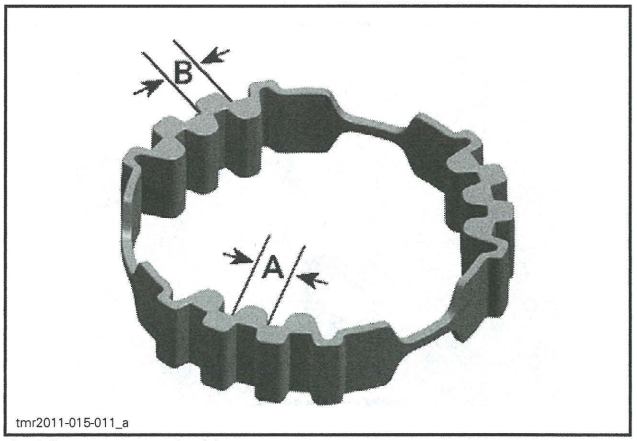

A. Measurement inside
B. Measurement outside

WEAR ON TEETH BOTH SIDES	
SERVICE LIMIT	7.500 mm (.295 in)

Cam

Check cam for visible damage and wear limit with a caliper.

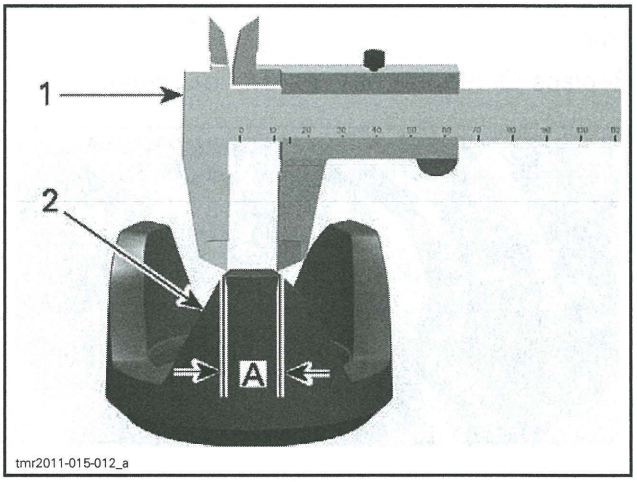

1. Caliper
2. Contact surface
A. Width to be measured due to wear on contact surface

WIDTH ON TOP SURFACE	
SERVICE LIMIT	9.00 mm (.354 in)

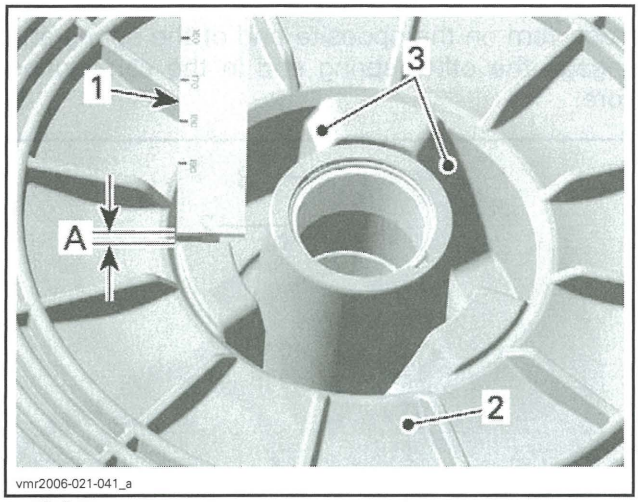

1. Caliper
2. Sliding sheave
3. Contact surface
A. Wear to be measured

WEAR ON CONTACT SURFACE	
SERVICE LIMIT	1.00 mm (.039 in)

Spring

Measure spring free length and squareness. If spring is out of specification, replace by a new.

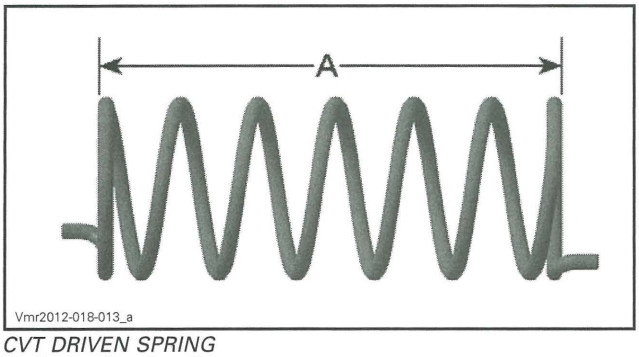

CVT DRIVEN SPRING
A. Spring free length

SPRING FREE LENGTH	
SERVICE LIMIT	125 mm (4.921 in)
CLUTCH SPRING SQUARENESS	
SERVICE LIMIT	3.8 mm (.15 in)

Driven Pulley Assembly

For installation, reverse the removal procedure. Pay attention to following details.

Heat ball bearing area up to 100°C (212°F) before ball bearing installation.

NOTE: Place new ball bearing in a freezer for 10 minutes before installation.

Install ball bearing with the writing on top and push only on the outer ring.

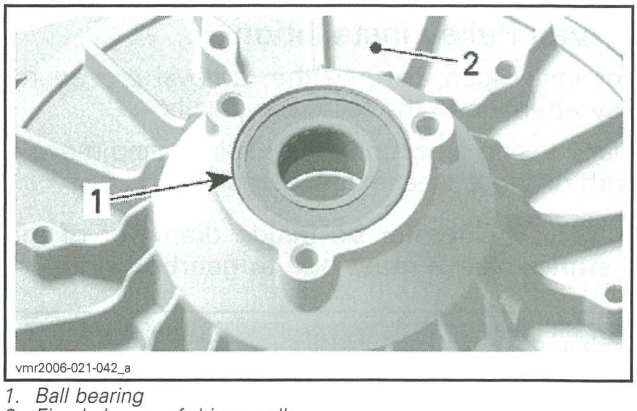

1. Ball bearing
2. Fixed sheave of driven pulley

NOTICE Do not use hammer, use press machine only.

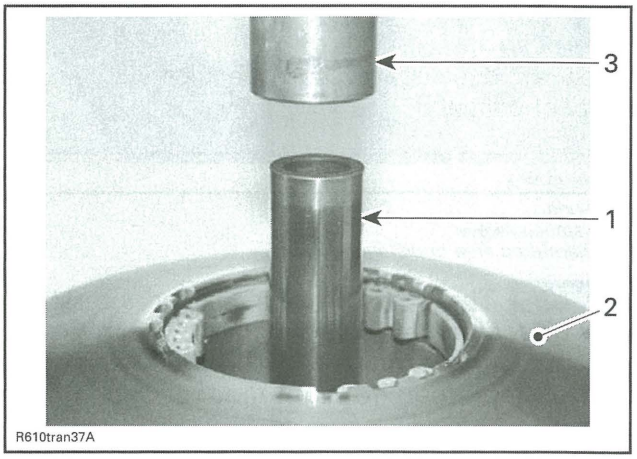

1. Shaft
2. Fixed sheave
3. Press machine

Install torque gear then secure it with retaining ring.

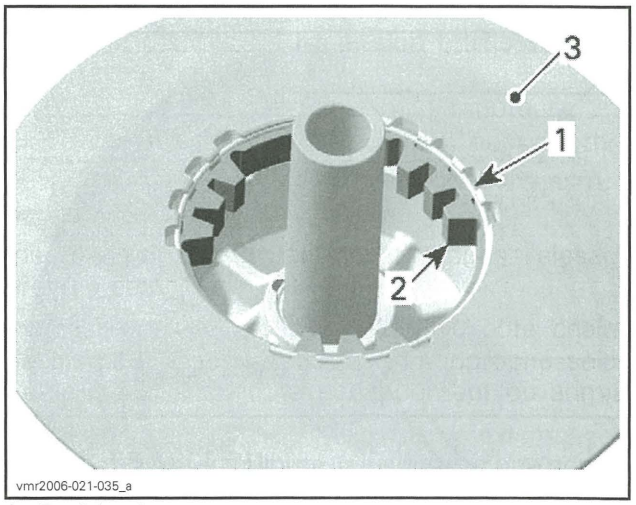

1. Retaining ring
2. Torque gear
3. Fixed sheave of driven pulley

Driven Pulley Installation

For installation, reverse the removal procedure. Pay attention to the following details.

Place O-ring on countershaft splines and move it with distance sleeve in end position.

NOTICE **Chamfer on inside diameter of the distance sleeve must face to gearbox side.**

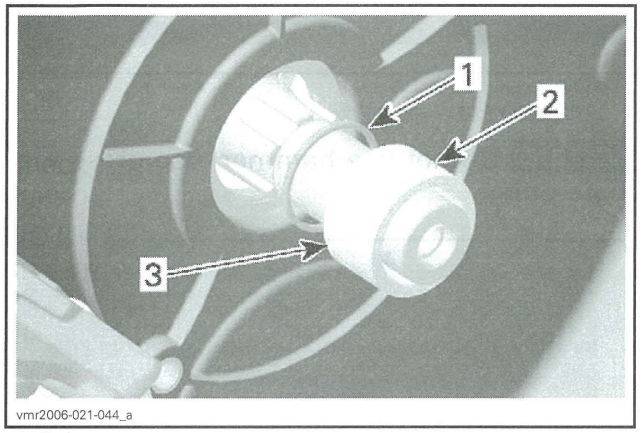

1. *O-ring*
2. *Distance sleeve*
3. *Chamfered area of distance sleeve*

NOTICE **Threads of gearbox countershaft and driven pulley screw must be free of oil and grease. Lubricants in threads will create too high preload to tightened driven pulley screw.**

Clean threads using PULLEY FLANGE CLEANER (P/N 413 711 809).

Insert the sliding sheave in the fixed sheave.

Place spring behind sliding sheave and engage spring end in the sliding sheave spring bore.

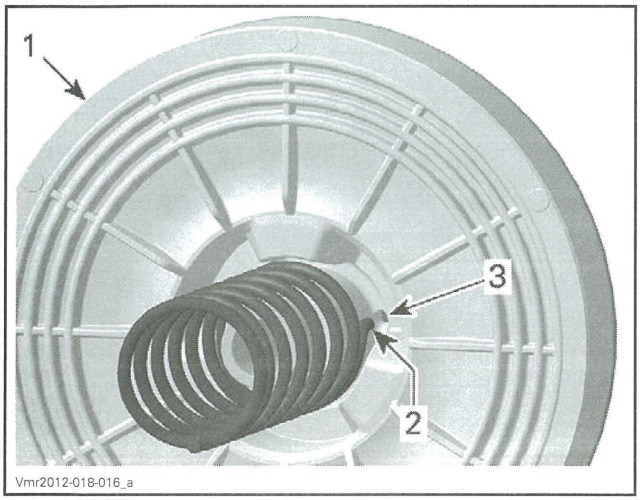

1000 ENGINE
1. *Sliding sheave*
2. *Spring end*
3. *Spring bore*

Place cam on the opposite end of the spring and engage the other spring end in the cam spring bore.

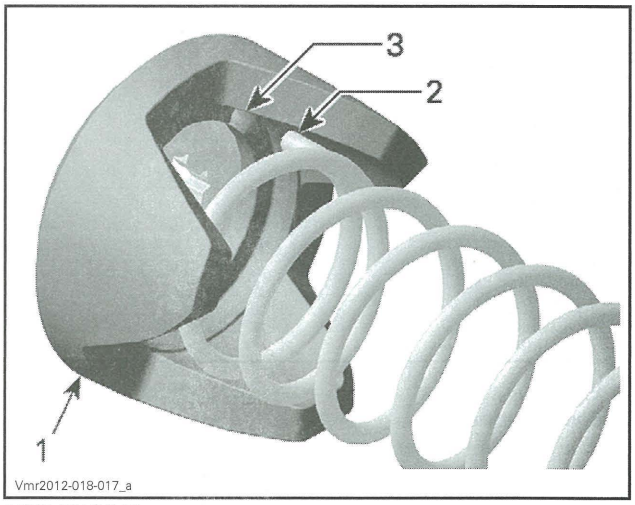

1000 ENGINE
1. *Cam*
2. *Spring end*
3. *Spring bore*

Install pre-assembled cam with spring and driven pulley on countershaft end.

NOTICE **Cam must engage on countershaft splines.**

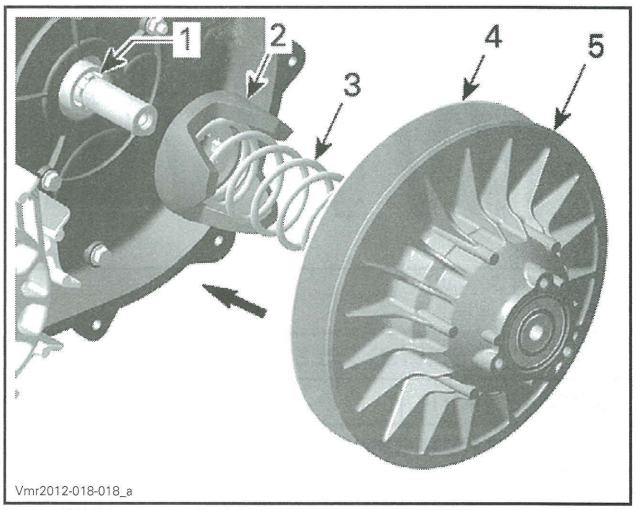

1000 ENGINE
1. *Countershaft splines*
2. *Cam*
3. *Spring*
4. *Sliding sheave*
5. *Fixed sheave*

With your hand, push the driven pulley onto the shaft to compress the spring.

As you hold the pulley in, install a **NEW** driven pulley screw and thrust washer.

NOTICE **This assembly uses a stretch screw. Always install a NEW screw.**

NOTE: Tighten the screw with your hand approximately 3 to 4 turns.

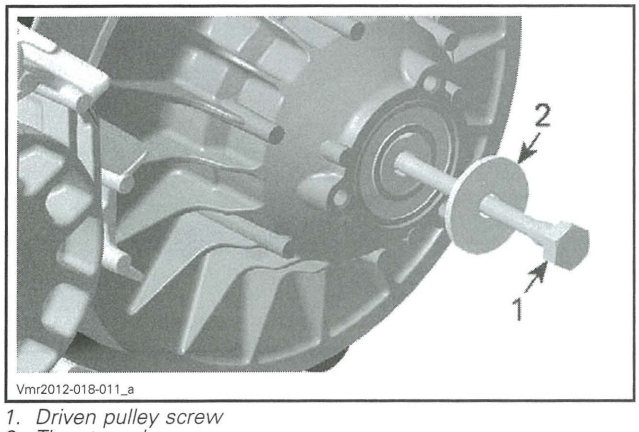

1. *Driven pulley screw*
2. *Thrust washer*

Insert a screwdriver of approximately 5 mm (.197 in) diameter in the cam.

NOTE: For clarity of understanding, some parts not shown in the following illustration.

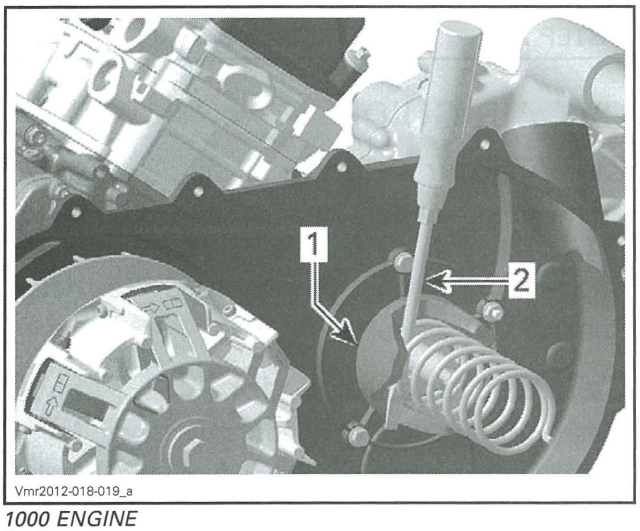

1000 ENGINE
1. *Cam*
2. *Screwdriver, diameter 5 mm (.197 in)*

Hold the driven pulley in a fix position.

REQUIRED TOOL	
CLUTCH HOLDER (P/N 529 036 238)	

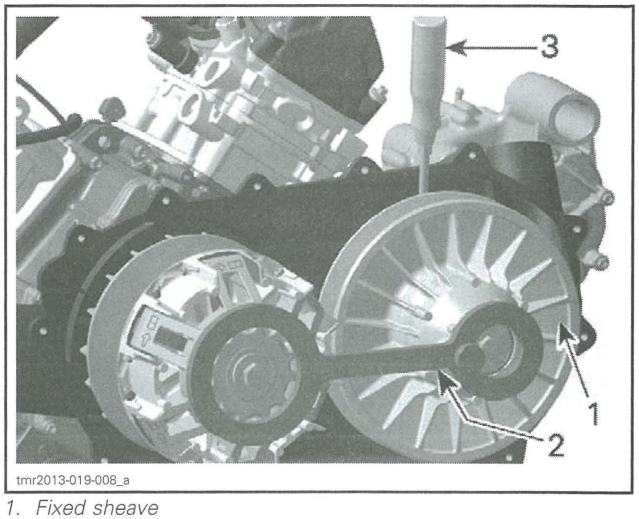

1. *Fixed sheave*
2. *Clutch holder*
3. *Screwdriver*

Turn the screwdriver approximately 20° counterclockwise until cam engages in the driven pulley sliding sheave and hold it in this position (spring preload).

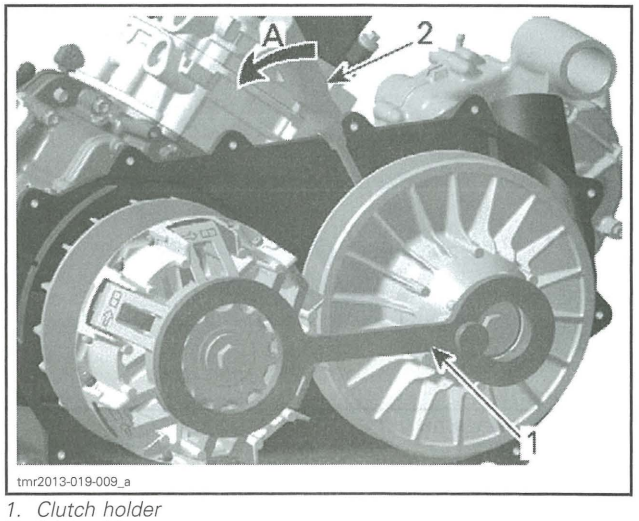

1. *Clutch holder*
2. *Screwdriver*

A. 20° turn

Using a socket and extension, hand tighten the driven pulley screw.

NOTE: **Do not** apply specified torque at this time.

Move the screwdriver back and forth to check cam for free movement.

NOTICE **A cam not correctly engaged will cause damage to the driven pulley and cam.**

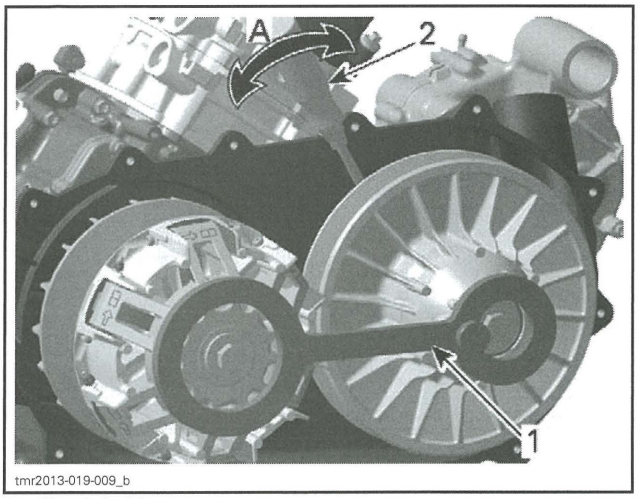

1. *Clutch holder*
2. *Screwdriver*

A. Cam freedom of movement

Tighten driven pulley screw as specified.

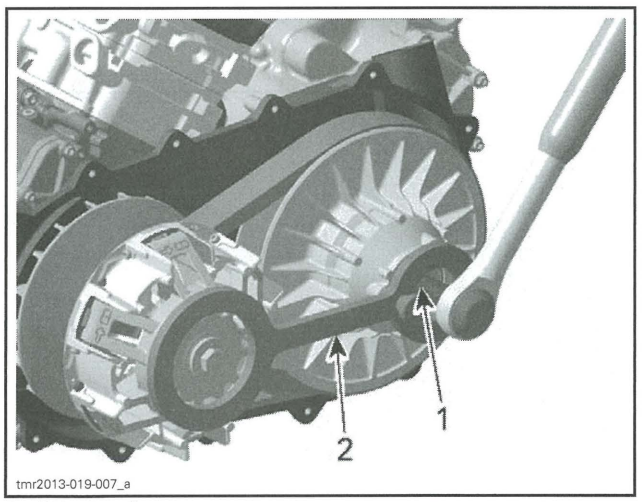

1. *Driven pulley screw*
2. *Clutch holder*

Remove service tool.

Install drive belt. Refer to *DRIVE BELT* in this subsection.

REQUIRED TOOL	
PULLER/LOCKING TOOL (P/N 529 036 098)	

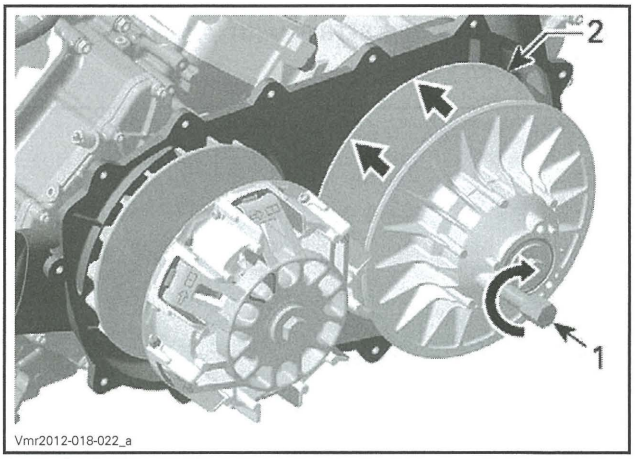

1. *Puller/locking tool*
2. *Sliding sheave*

NOTE: If driven pulley sheaves can to be opened when the service tool is screwed in, the cam is not correctly engaged in the sliding sheave.

TIGHTENING SEQUENCE (DRIVEN PULLEY SCREW)	
STEP 1	20 N•m ± 1 N•m (15 lbf•ft ± 1 lbf•ft)
STEP 2	180° ± 5°

CVT AIR GUIDE

CVT Air Guide Removal

Remove the *DRIVE PULLEY* and the *DRIVEN PULLEY*.

Unscrew the clamps retaining the CVT air hoses.

Remove CVT air guide.

CVT Air Guide Inspection

Clean CVT air guide from contamination

Check O-rings if brittle, hard or damaged. Replace if necessary.

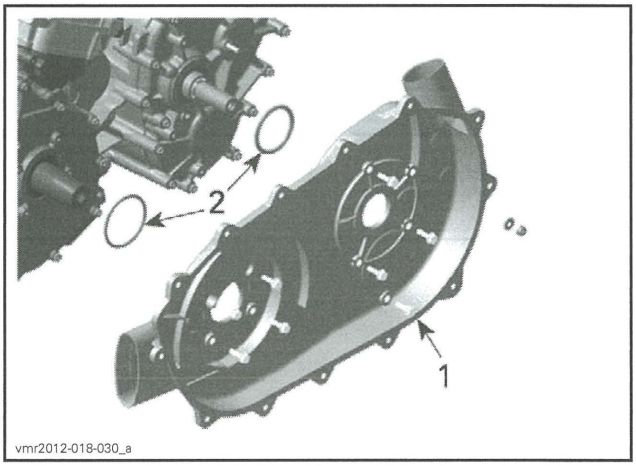

1. *CVT air guide*
2. *O-rings*

CVT Air Guide Installation

For installation reverse the removal procedure.

GEARBOX AND 4X4 COUPLING UNIT

SERVICE TOOLS

Description	Part Number	Page
BLIND HOLE BEARING PULLER SET	529 036 117	199
COUNTERSHAFT OIL SEAL PUSHER	529 036 222	192
ECM ADAPTER TOOL	529 036 166	188
FLUKE 115 MULTIMETER	529 035 868	186, 190
HANDLE	420 877 650	192
OIL SEAL INSTALLER (GEARBOX)	529 035 758	192
OIL SEAL INSTALLER	529 036 204	193

SERVICE TOOLS – OTHER SUPPLIER

Description	Part Number	Page
BACK PROBE TEST WIRES	529 036 063	186, 188

SERVICE PRODUCTS

Description	Part Number	Page
LOCTITE 5910	293 800 081	189, 205
LOCTITE CHISEL (GASKET REMOVER)	413 708 500	205
SUPER LUBE GREASE	293 550 030	187, 190, 193

GEARBOX COMPONENTS AND 4X4 COUPLING MECHANISM

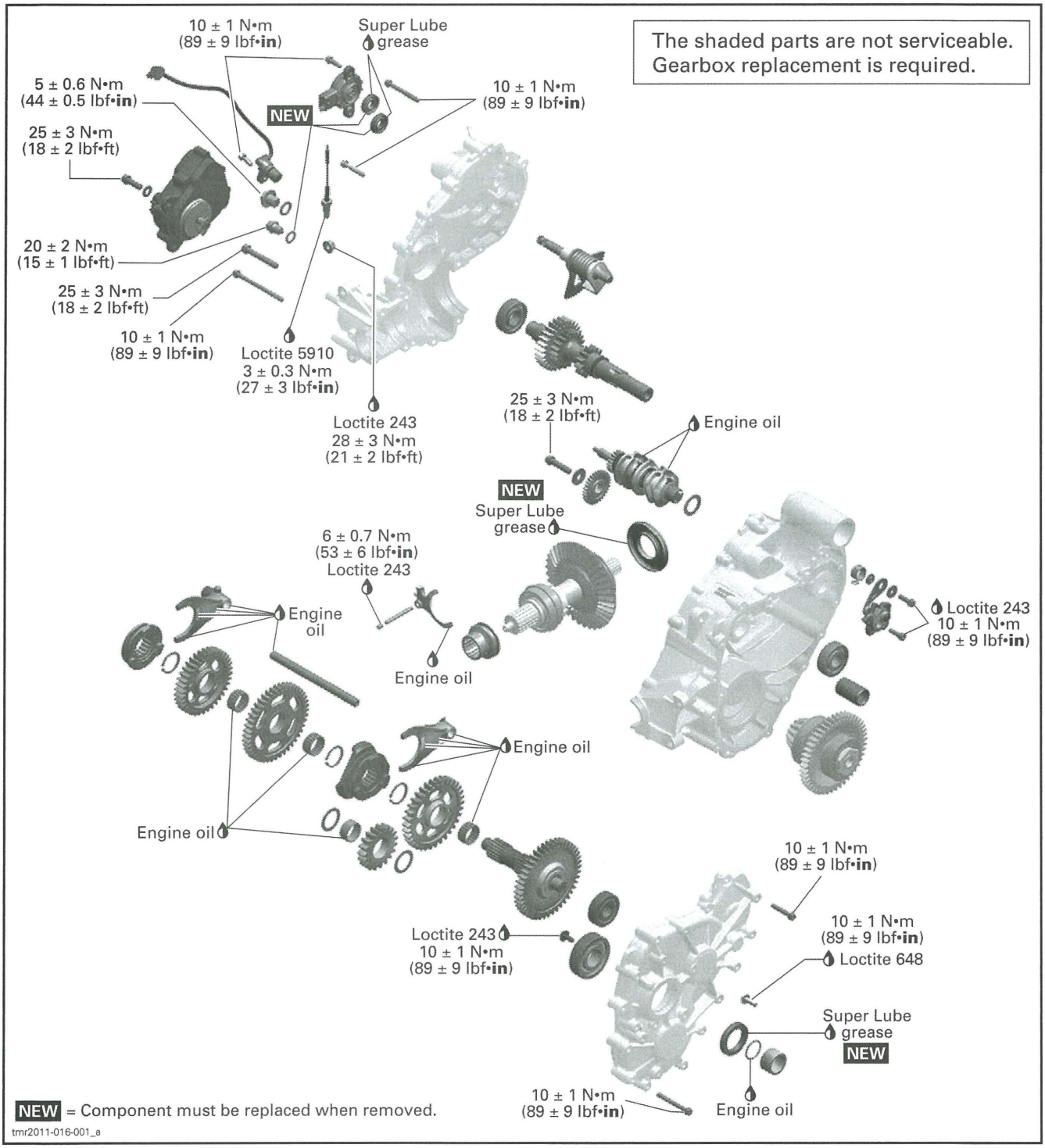

GENERAL

GEARBOX OVERVIEW

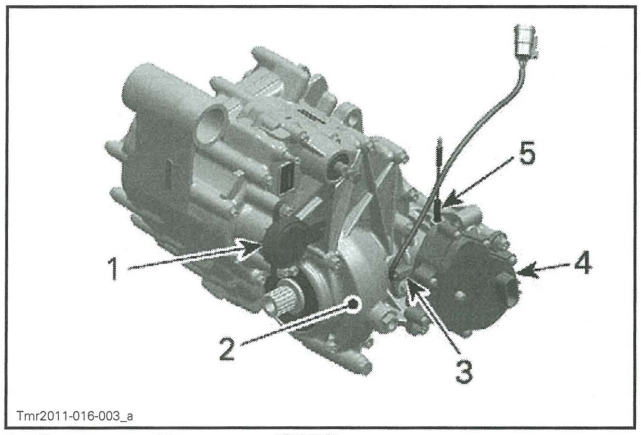

1. *Gearbox position sensor (GBPS)*
2. *Right cover*
3. *Vehicle speed sensor (VSS)*
4. *Actuator*
5. *4WD indicator switch*

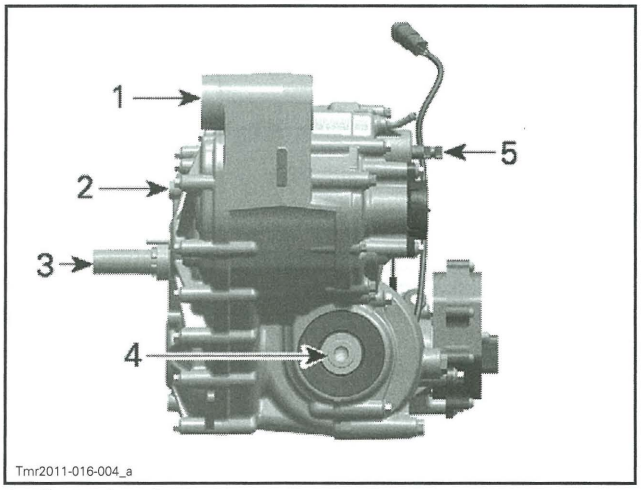

1. *Center housing*
2. *Left cover*
3. *Countershaft*
4. *Output shaft*
5. *Shift shaft*

TROUBLESHOOTING

UNUSUAL GEARBOX NOISE AND/OR VIBRATIONS

1. Low oil level in gearbox.
   - *Oil leakage from gearbox. Replace damaged gasket(s) and/or oil seal(s).*
2. Defective bearings.
   - *Bearing(s) do(es) not turn smoothly. Replace bearing(s).*
3. Damaged or worn gears.
   - *Inspect gears for damages or missing teeth. Replace respective gears.*

GEAR INDICATION FAILS

1. Defective gearbox position sensor (GBPS).
   - *Perform a gearbox position sensor test.*
   - *Damaged wires. Repair as required.*

GEAR(S) IS (ARE) HARD TO SHIFT

1. Incorrect shifter cable adjustment.
   - *Adjust shifter cable (refer to SHIFTER CABLE in SHIFTER subsection.*

4 WHEEL DRIVE INDICATION FAILS

1. 4WD indicator switch failure.
   - *Test 4WD indicator switch. Replace as required.*
   - *Bad contact. Check for corrosion or loose connector.*
   - *Damaged wires. Repair as required.*

4 WHEEL DRIVE DOES NOT ENGAGE OR DISENGAGE

1. Defective 4WD switch.
   - *Check 4WD switch operation.*
2. Defective actuator.
   - *Test actuator.*
3. Damaged or worn shifting fork or sleeve.
   - *Remove actuator and inspect shifting fork and sleeve.*

PROCEDURES

VSS (VEHICLE SPEED SENSOR)

VSS Location

The vehicle speed sensor is located on the right housing of the gearbox behind the actuator.

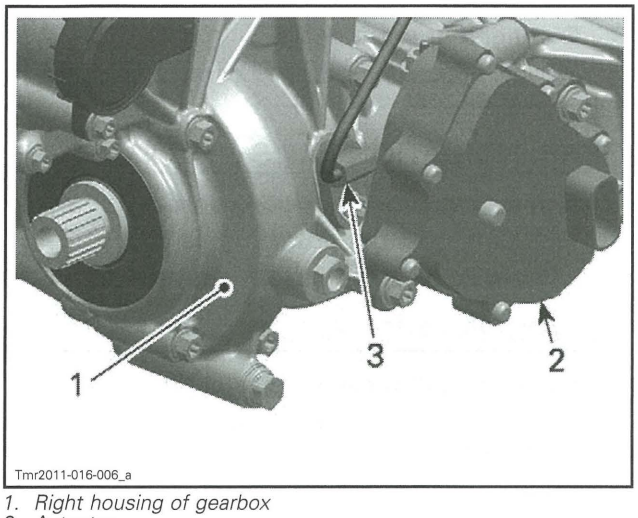

1. Right housing of gearbox
2. Actuator
3. VSS (Vehicle Speed Sensor)

VSS Access

To reach the VSS, remove the following parts:
- Passenger seat
- RH lateral console panel
- Fuel tank cowl.

VSS Wire Identification

FUNCTION	PIN	COLOR
12-volt input from fuse F5	A	RED
Speed signal (to ECM-A E1)	B	WHITE
Ground (to ECM-A D4)	C	BLACK/GREEN

VSS Circuit Protection

CONDITION	CIRCUIT PROTECTION
Supplied with main relay activated	Fuse 5 of fuse block 1 (from main relay R2)

VSS Input Voltage Test

1. Turn ignition switch ON.
2. Back-probe the VSS connector and measure voltage.

REQUIRED TOOLS	
BACK PROBE TEST WIRES (P/N 529 036 063)	
FLUKE 115 MULTIMETER (P/N 529 035 868)	

VSS INPUT VOLTAGE TEST		
TEST PROBES		RESULT (KEY ON)
PIN A (RED wire)	PIN C (BLACK/GREEN wire)	Battery voltage

If voltage is not as specified, test positive and ground separately.

VSS Signal Test

1. Lift rear of vehicle so that rear wheels are off the ground.
2. Set transmission to 2WD and to Neutral.
3. Turn ignition switch ON.
4. Back-probe the VSS connector and measure voltage while slowly rotating rear wheels by hand.

REQUIRED TOOLS	
BACK PROBE TEST WIRES (P/N 529 036 063)	
FLUKE 115 MULTIMETER (P/N 529 035 868)	

VSS SIGNAL TEST		
TEST PROBES		RESULT (WHILE ROTATING WHEELS)
PIN B (WHITE wire)	PIN C (BLACK/GREEN wire)	Alternate reading between battery voltage and 0 Vdc

NOTE: Since we measure pulsating voltage, the numeric display will continuously change. The analog display may be easier to follow.

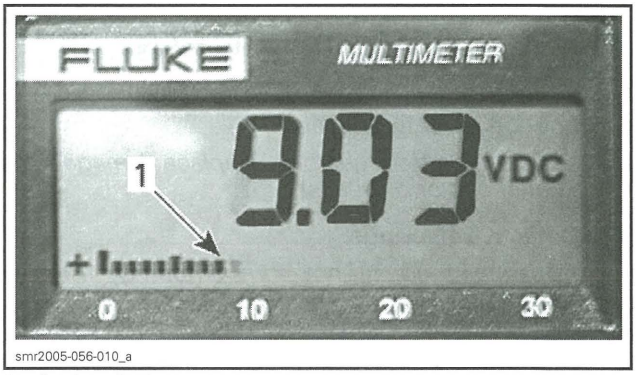

1. Analog display

VSS Removal

Remove screw retaining the VSS.

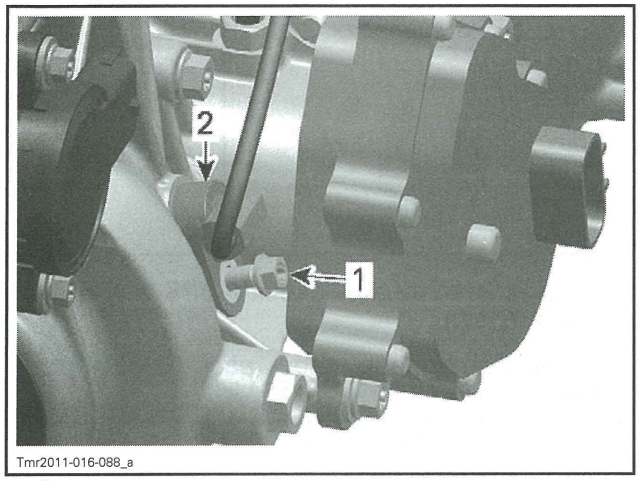

1. Screw
2. VSS

Turn sensor and weave it out of the gearbox right cover.

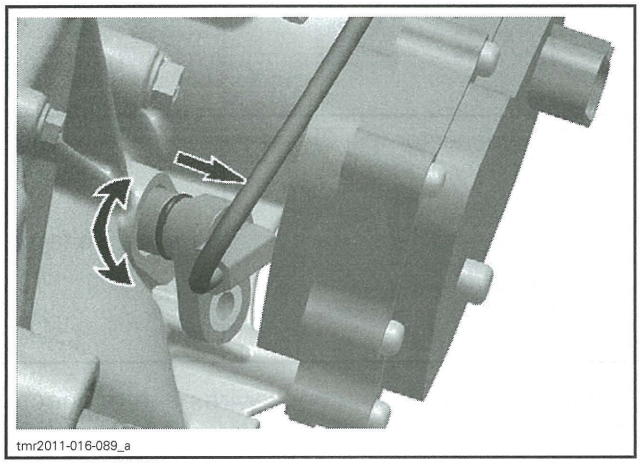

VSS Installation

For installation, reverse the removal procedure. Pay attention to the following.

Apply SUPER LUBE GREASE (P/N 293 550 030) on VSS O-ring.

GBPS (GEARBOX POSITION SENSOR)

GBPS Reset

When replacing the gearbox position sensor (GBPS), it is required to reset (re-zero) its values for proper operation.

A reset must be carried out each time any of the following parts has been replaced:

- Gearbox assembly
- Shift drum
- GBPS
- ECM.

1. Connect vehicle to the latest applicable version of B.U.D.S. software, refer to *COMMUNICATION TOOLS AND B.U.D.S.* subsection.

NOTE: Ignition key must stay ON during the reset procedure. If the key is turned off, the procedure must be carried out again.

2. In B.U.D.S., select the following:
   - **Read Data** button
   - **Setting** page tab
   - **ECM** tab.

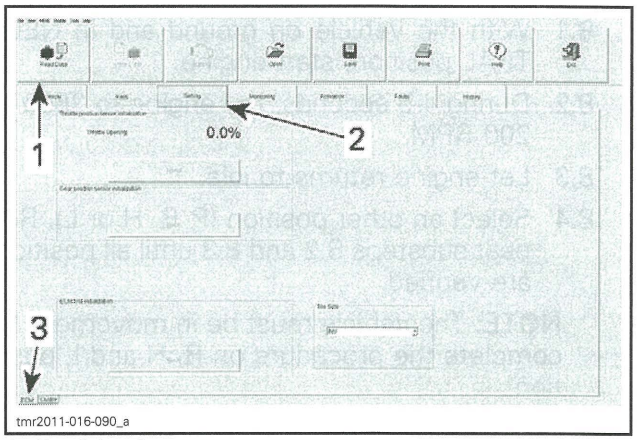

1. Read data button
2. Setting page tab
3. ECM tab

3. Make sure that gearbox is set to NEUTRAL position.
4. In the **Gear Position Sensor Initialization** field, click on the **Reset** button.

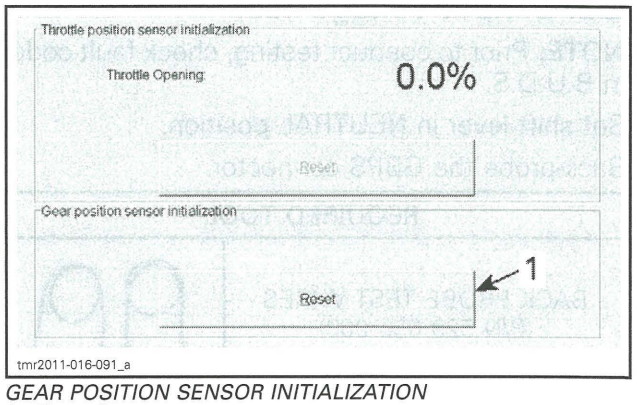

GEAR POSITION SENSOR INITIALIZATION
1. Reset button

A message will be displayed if the operation is successful.

If an error occurred or the GBPS is not within the allowed range while resetting, the ECM will generate a fault code and will not accept the setting.

5. If a fault message is displayed, follow the instructions in the message(s).
6. Check for fault codes.

If a fault code is generated:

- Carry out the service action.
- Reset the fault code.
- Repeat the reset procedure.

7. Close and disconnect B.U.D.S.

NOTE: Do not turn ignition key OFF.

8. Verify gears engagement.
   - 8.1 With the vehicle on ground and in NEUTRAL position, start engine.
   - 8.2 During 4-5 seconds, rev engine to 2500 ± 200 RPM.
   - 8.3 Let engine returns to idle.
   - 8.4 Select an other position (P, R, H or L). Repeat substeps 8.2 and 8.3 until all position are verified.

   NOTE: The vehicle must be in movement to complete the procedure on R, H and L position.

GBPS Access

To reach the GBPS sensor, remove the following parts:

- Passenger seat
- RH lateral console panel
- Fuel tank cowl.

GBPS Input Voltage Test

NOTE: Prior to conduct testing, check fault codes in B.U.D.S.

Set shift lever in NEUTRAL position.

Back-probe the GBPS connector.

REQUIRED TOOL	
BACK PROBE TEST WIRES (P/N 529 036 063)	

Test as follow:

MULTIMETER PROBE POSITIONS	VOLTAGE
PIN 1 and PIN 3 of the GBPS connector 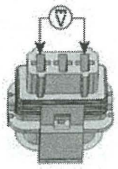	5 volts

If voltage is adequate, check GBPS communication link (CAN).

If there is no voltage, check each GBPS input as follows.

MULTIMETER PROBE POSITIONS	VOLTAGE
GBPS connector (pin 1) and battery ground 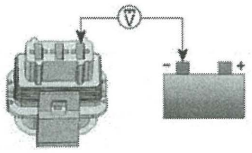	5 volts
GBPS connector (pin 3) and battery + terminal 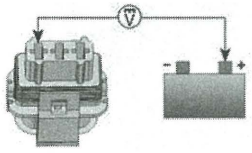	Battery voltage

If there is no voltage, check wires and connector pins. Replace or repair defective parts and reset fault codes.

GBPS Communication Link Continuity Test

Unplug connector "A" from ECM and connect it to the ECM ADAPTER TOOL (P/N 529 036 166).

MULTIMETER PROBE POSITIONS	RESISTANCE @ 20°C (68°F)
GBPS connector (pin 2) and ECM adapter tool (pin F4) 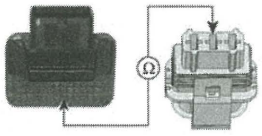	Below 1 Ω

If resistance is out of specification, check wires and connectors. Repair and reset fault codes.

If resistance is good and the other tests succeeded, replace the GBPS and reset fault codes.

NOTE: The GBPS must be reset.

GBPS Removal

Set shift lever in NEUTRAL position.

Unplug GBPS connector.

Remove screws and withdraw GBPS.

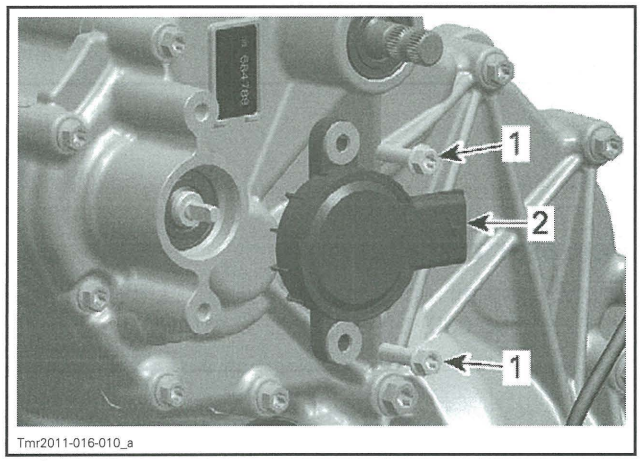

1. Screws
2. Gearbox Position Sensor (GBPS)

GBPS Installation

For installation, reverse the removal procedure. Pay attention to the following details.

Shift lever must be in the NEUTRAL position.

Align GBPS with the flat on the shift drum shaft.

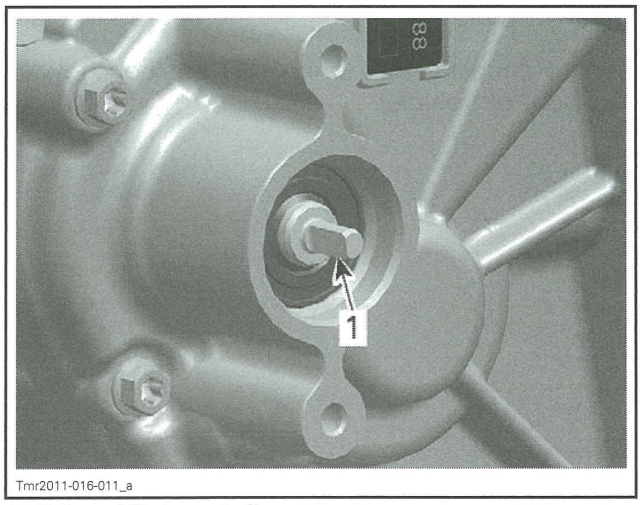

1. Flat on shift drum shaft

Reset the GBPS. Refer to *GBPS RESET* in this subsection.

4WD INDICATOR SWITCH

4WD Indicator Switch Access

To reach the 4WD indicator switch, remove the following parts:

- Passenger seat
- RH lateral console panel
- Fuel tank cowl.

4WD Indicator Switch Removal

Disconnect 4WD indicator switch connector.

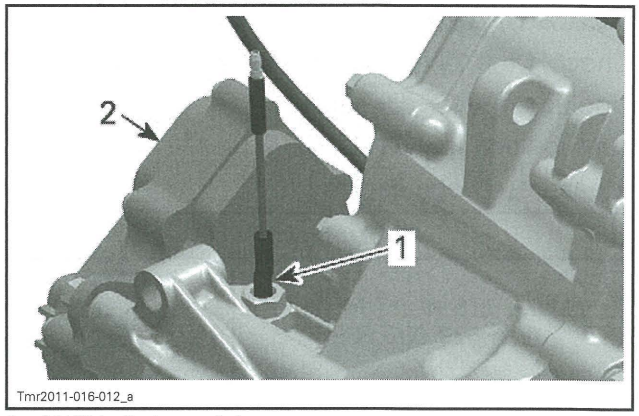

1. 4 WD indicator switch
2. Actuator

4WD Indicator Switch Test

Measure switch resistance as follows.

SWITCH POSITION	SWITCH WIRE		RESISTANCE
2WD	BLACK/ BEIGE	Engine ground	Infinite (OL)

If the resistance is out of specification, replace the 4WD indicator switch.

4WD Indicator Switch Installation

For installation, reverse the removal procedure. Pay attention to the following details.

Take care do not damage indicator switch threads during installation.

Apply carefully some LOCTITE 5910 (P/N 293 800 081) on threads of indicator switch.

NOTICE Do not apply Loctite 5910 on switch plunger, as it will lead to switch malfunction.

ACTUATOR

Actuator Access

To access the actuator, remove the following parts:

- Passenger seat
- RH lateral console panel
- Fuel tank cowl.

Remove screws securing fuel tank and move tank on passenger's floor without disconnecting hoses and connector from fuel pump.

Actuator Test

Check if the 2WD/4WD selector works properly.

Unplug actuator connector.

Turn ignition key ON.

Measure voltage as follows.

REQUIRED TOOL	
FLUKE 115 MULTIMETER (P/N 529 035 868)	

SWITCH POSITION	SWITCH WIRE		VOLTAGE
2WD	WHITE/BLUE	WHITE	Battery voltage
4WD	WHITE/BLACK		

If the selector is out of specifications, check wires, connectors and replace the selector if necessary.

If the selector is good, check the vehicle harness.

If the vehicle harness is good, replace the actuator.

Actuator Removal

NOTE: Before beginning any servicing on the actuator, make sure the vehicle is in 4WD position. No need to remove engine from vehicle.

Place a drain pan under actuator.

Remove actuator screws.

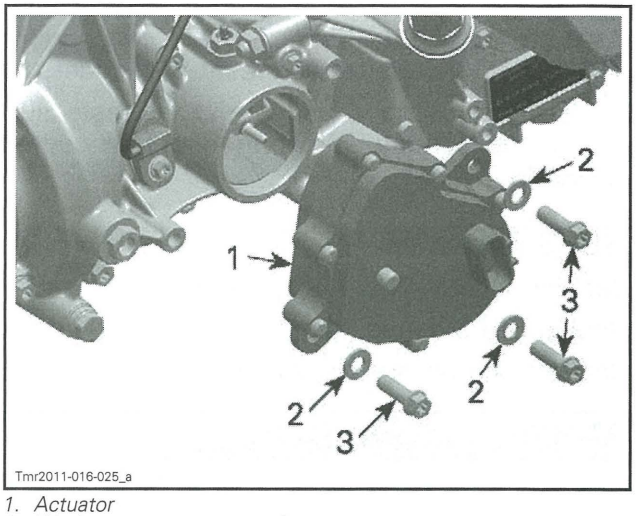

1. *Actuator*
2. *Washer*
3. *Screw*

Pull the actuator out of housing.

Actuator Installation

Apply a small amount of SUPER LUBE GREASE (P/N 293 550 030) on actuator O-ring.

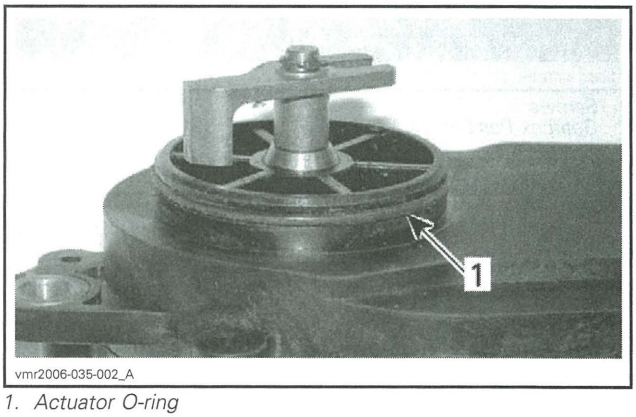

1. *Actuator O-ring*

Ensure coupling fork is in 4WD position (toward the front of vehicle).

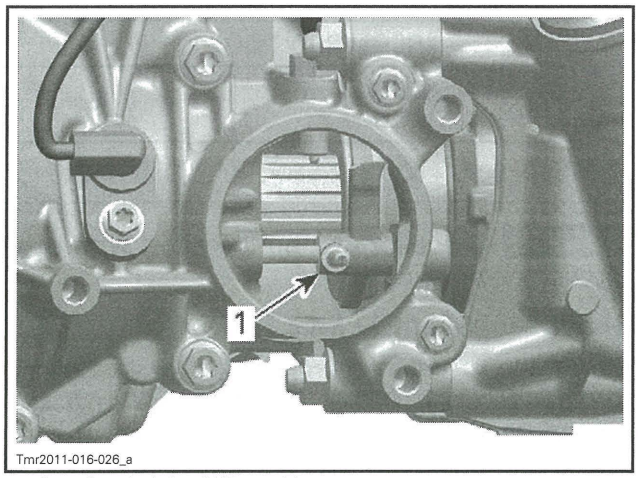

1. Coupling fork in 4WD position

Align the actuator fork with the pin on coupling fork then push the actuator in the housing. See the following illustration to position the actuator correctly.

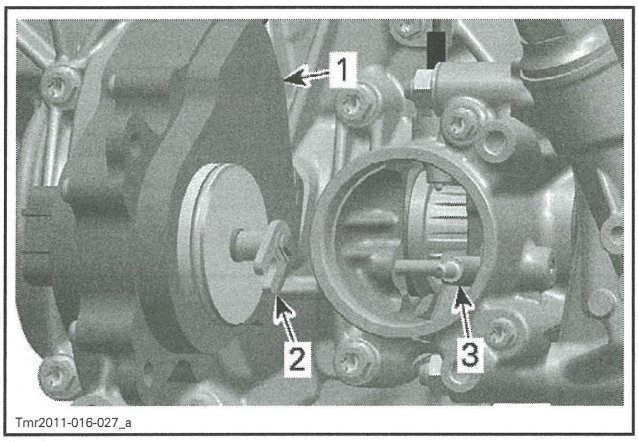

1. Actuator
2. Actuator fork
3. Coupling fork

Rotate the actuator counterclockwise until it orients itself to mounting position.

NOTICE Do not cut or break the actuator O-ring.

Install all actuator screws and tighten them.

ACTUATOR SCREWS	
Tightening torque	25 N•m ± 3 N•m (18 lbf•ft ± 2 lbf•ft)

Connect actuator.

Lift the front of vehicle.

Turn front wheels. The front propeller shaft should not turn (the PARK position must be selected).

If the front propeller shaft turns, the actuator is not installed correctly. Remove actuator and reinstall it.

Place ignition switch to ON position and select the 2WD position.

Turn front wheel again. The front propeller shaft should turn easily.

If the front propeller shaft does not turn, the actuator is not installed correctly. Remove actuator and reinstall it.

NOTICE Refill missing gearbox oil, refer to *GEARBOX OIL REPLACEMENT* in *PERIODIC MAINTENANCE PROCEDURES* subsection.

Install all other removed parts.

GEARBOX OIL SEALS

Gearbox Oil Seal Replacement

Replace oil seals if they are brittle, hard or damaged.

A small flat screwdriver can be used to remove most of these oil seals.

NOTICE Avoid scoring parts during oil seal removal.

When replacing an oil seal, take this opportunity to inspect the following:
- Check bearings behind each oil seal for contamination and/or metal shavings.
- Check oil seal running surfaces for scratches.

Countershaft Oil Seal

To replace the countershaft oil seal, remove:
- Drive and driven pulleys
- CVT air guide.

NOTE: When oil seal is removed also inspect O-ring behind distance sleeve.

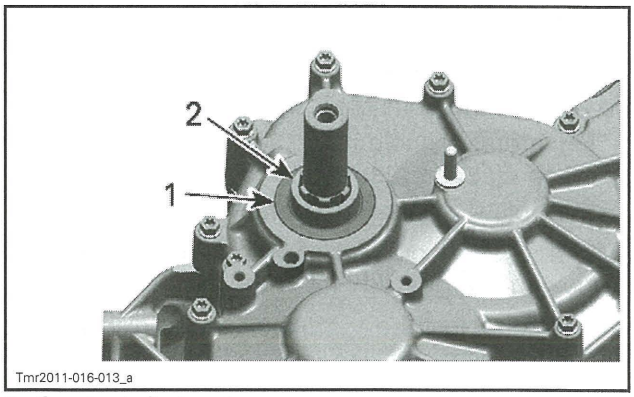

1. Countershaft oil seal
2. Distance sleeve

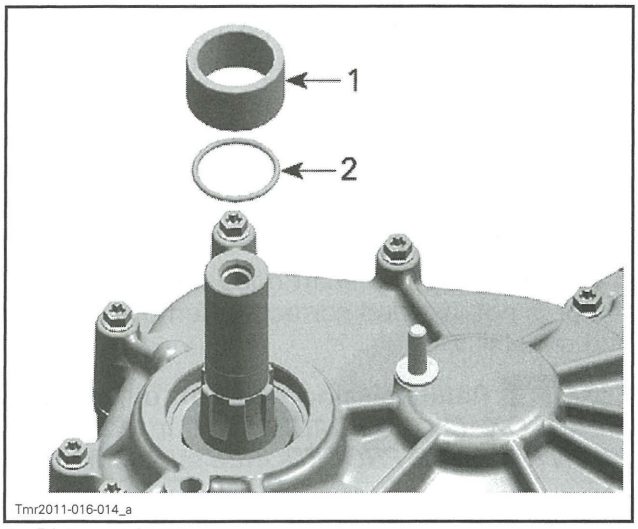

1. *Distance sleeve*
2. *O-ring*

Install countershaft oil seal.

REQUIRED TOOL	
COUNTERSHAFT OIL SEAL PUSHER (P/N 529 036 222)	

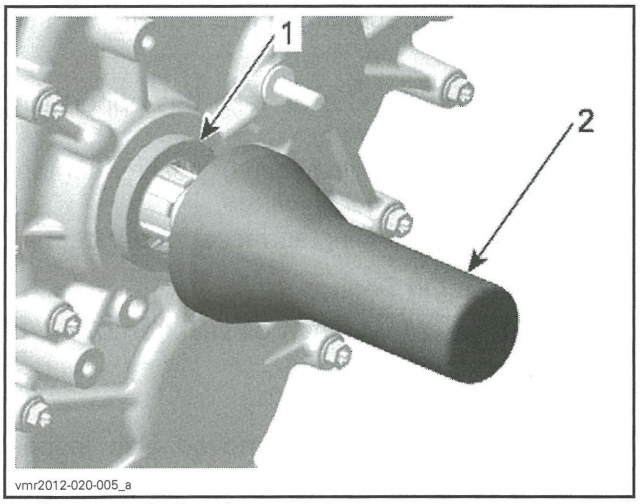

1. *Countershaft oil seal*
2. *Oil seal installer*

Shift Shaft Oil Seal

To replace the shift shaft oil seal, remove:

- RH lateral console panel and fuel tank cowl, refer to *BODY* subsection.
- Shift plate from shift shaft.

The shift shaft oil seal can be removed without removing the gearbox from the vehicle.

Use a suitable tube with the proper diameter to install the oil seal.

If gearbox housing is apart, use following tools for shift shaft oil seal installation.

REQUIRED TOOL	
OIL SEAL INSTALLER (GEARBOX) (P/N 529 035 758)	
HANDLE (P/N 420 877 650)	

NOTICE **Oil seal must be installed with sealing lip toward gearbox.**

Shift Drum Shaft Oil Seal

To replace the shift drum shaft oil seal, remove the *GBPS (GEARBOX POSITION SENSOR)*. See procedure in this subsection.

Use a suitable tube with the proper diameter to install the oil seal.

NOTICE **Oil seal must be installed with sealing lip toward gearbox.**

Output Shaft Oil Seal

To replace the output shaft oil seal, proceed as follows:

Remove propeller shaft screw from gearbox output shaft.

Remove rear final drive bolts.

Move the rear final drive rearward to dislodge the propeller shaft from the gearbox output shaft.

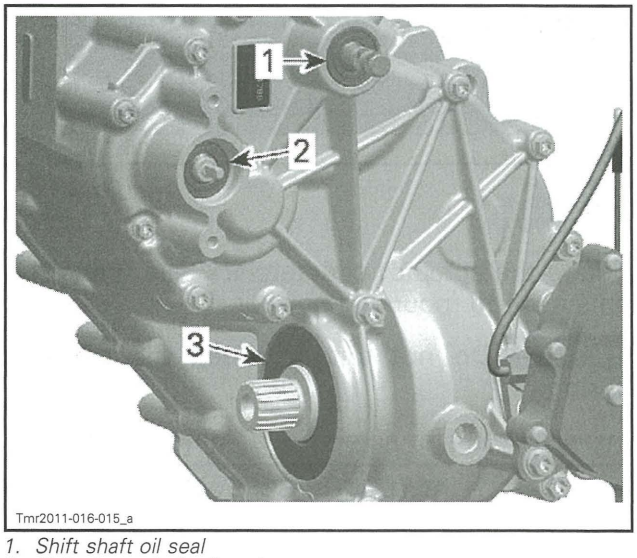

1. *Shift shaft oil seal*
2. *Shift drum shaft oil seal*
3. *Output shaft oil seal*

Punch a sharp screwdriver through oil seal for removal.

NOTE: Position screwdriver only in marked areas to avoid damaging the ball bearing underneath oil seal during removal.

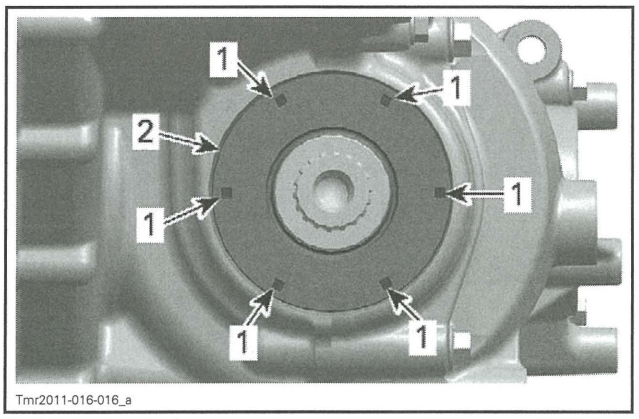

1. *Marked areas for removal*
2. *Output shaft oil seal*

Before beginning the installation ensure gearbox is set to PARK position.

Apply SUPER LUBE GREASE (P/N 293 550 030) on sealing lips.

Apply engine oil on outer diameter of oil seal to avoid damaging it during installation.

Place oil seal on output shaft and install it using the following tools.

REQUIRED TOOLS AND PARTS	
OIL SEAL INSTALLER (P/N 529 036 204)	
Flat washer (P/N 250 200 102)	
M12 x 1.25 x 35 hexagonal screw	

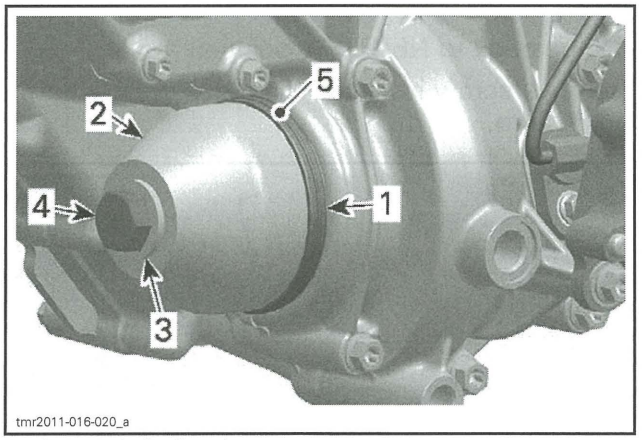

1. *Output shaft oil seal*
2. *Oil seal installer*
3. *Flat washer (P/N 250 200 102)*
4. *M12 x 1.25 x 35 hexagonal screw (P/N 207 683 544)*
5. *Apply engine oil on outer diameter of oil seal*

GEARBOX

Gearbox Removal

Remove engine from vehicle. Refer to *ENGINE REMOVAL AND INSTALLATION* for the procedure.

Refer to *CONTINUOUSLY VARIABLE TRANSMISSION (CVT)* subsection to remove following parts:
- CVT cover
- Drive and driven pulleys
- CVT air guide.

Drain gearbox. Refer to *GEARBOX OIL REPLACEMENT* in *PERIODIC MAINTENANCE PROCEDURES* subsection.

Remove *ACTUATOR*, see procedure in this subsection.

Unscrew the four (4) nuts that attach the gearbox to the engine.

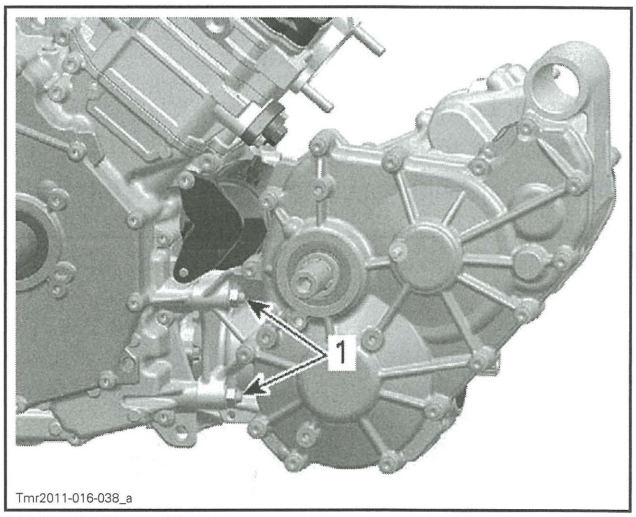

LH SIDE OF ENGINE
1. *Nut M8*

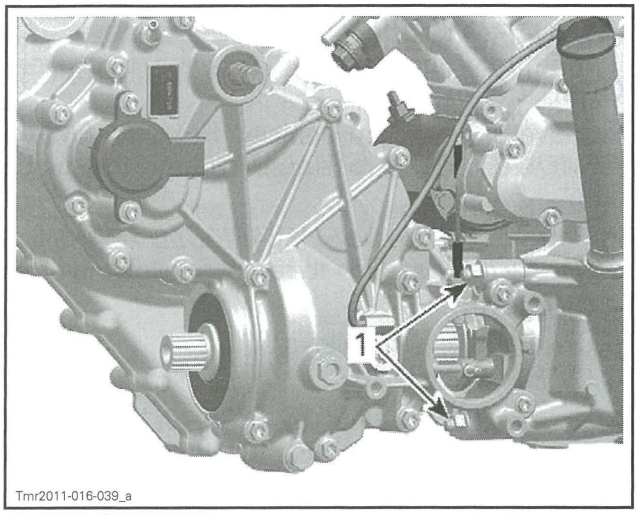

RH SIDE OF ENGINE
1. Nut M8

Pull gearbox to separate it from engine.

Gearbox Disassembly

NOTE: During gearbox disassembly, inspect the condition of each part closely.

Gearbox Left Cover

Set gearbox to NEUTRAL position.

Unscrew all bolts retaining the gearbox left cover.

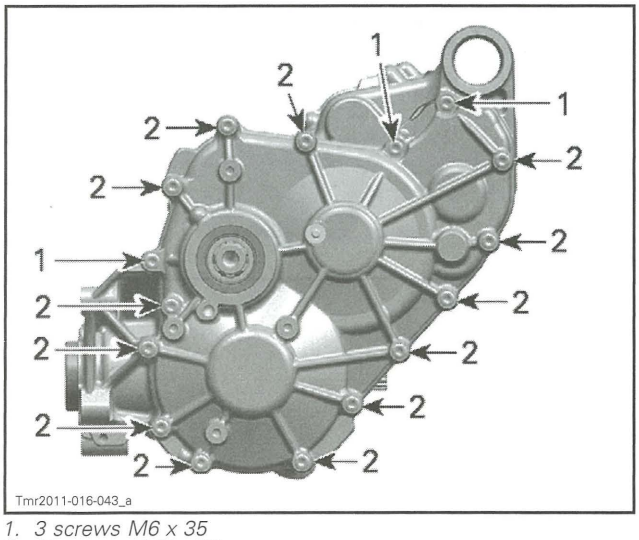

1. 3 screws M6 x 35
2. 13 screws M6 x 55

Place the center housing on a wood stand, left cover pointing upwards.

Using a big flat screwdriver and a soft hammer to lift the left cover.

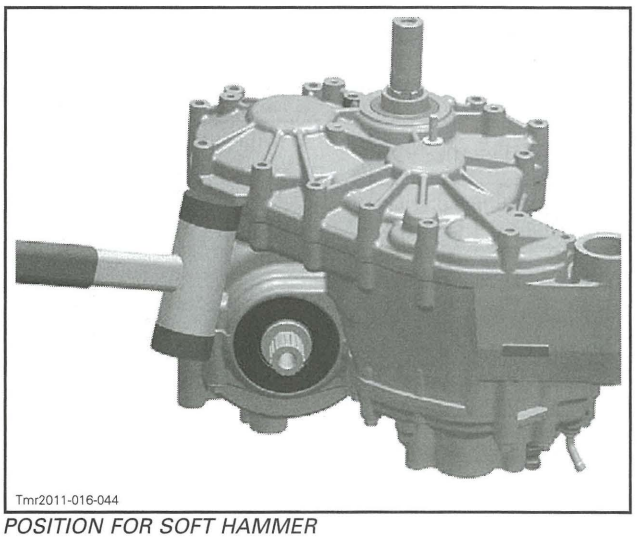

POSITION FOR SOFT HAMMER

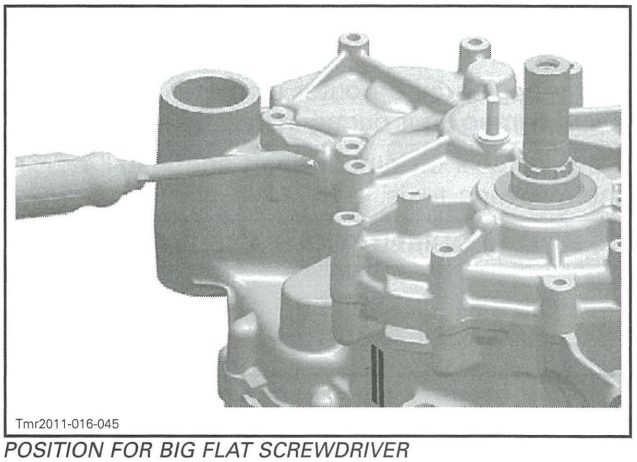

POSITION FOR BIG FLAT SCREWDRIVER

Index Lever and Index Washer

Set gearbox to NEUTRAL position.

Remove screw retaining the index washer to the shift drum.

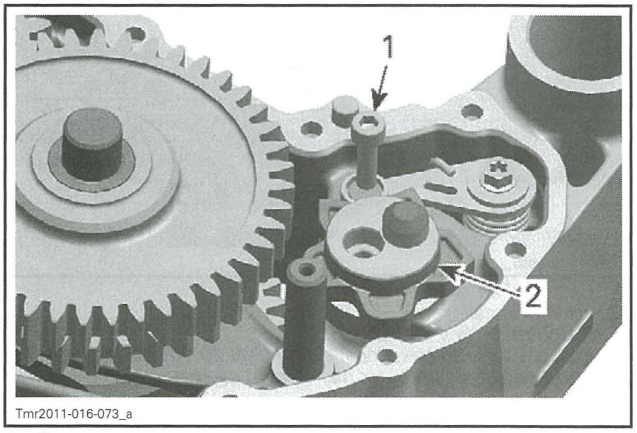

1. Screw
2. Index washer

Insert a flat screwdriver in the slot of index lever. Turn screwdriver clockwise and remove index washer.

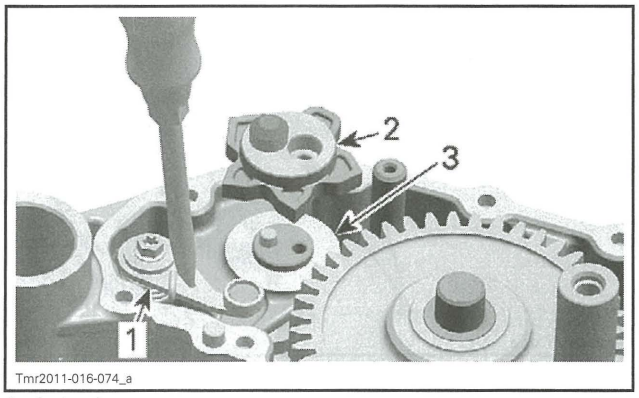

Tmr2011-016-074_a

1. Index lever
2. Index washer
3. Shift drum

Remove the index lever with washer, step ring and spring.

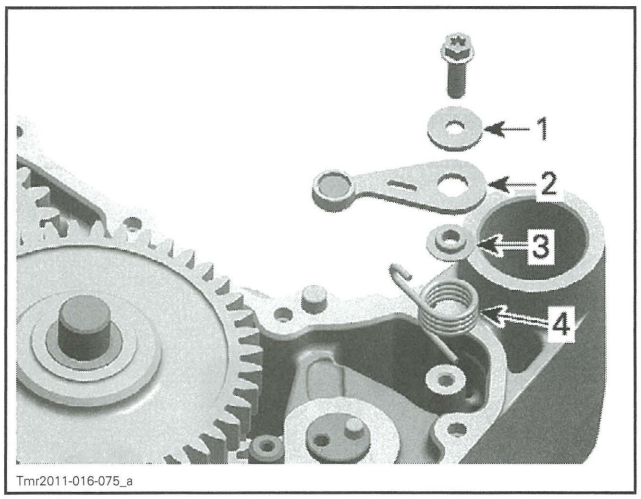

Tmr2011-016-075_a

1. Washer
2. Index lever
3. Step ring
4. Index spring

Main Shaft and Shift Forks

Remove bearing pin, reverse intermediate gear and thrust washers.

NOTE: Take care not to lose lower thrust washer during removal.

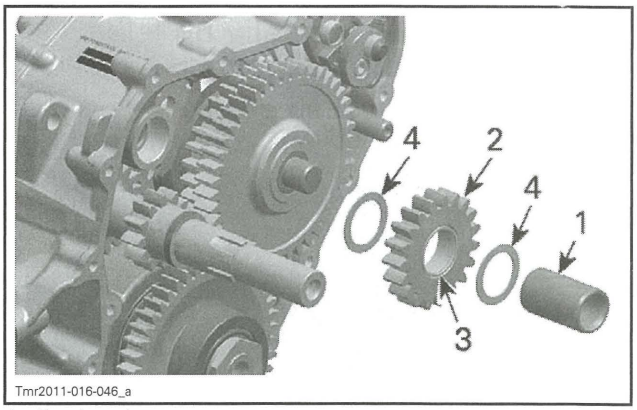

Tmr2011-016-046_a

1. Bearing pin
2. Reverse intermediate gear
3. Needle bearing
4. Thrust washers

Remove shift fork shaft.

Disengage shift forks from shift drum.

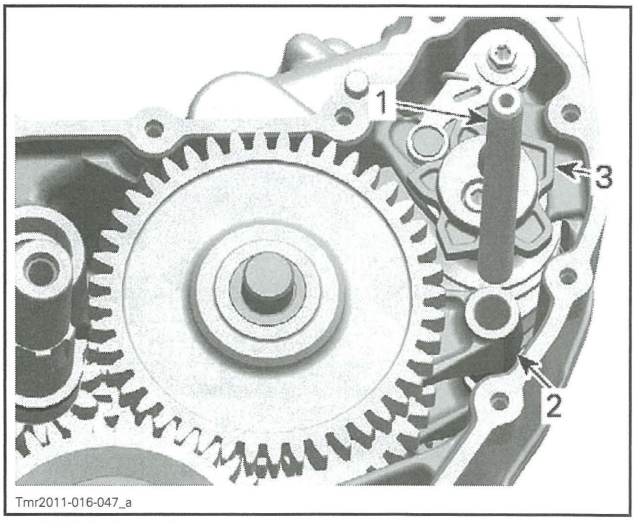

Tmr2011-016-047_a

1. Shift fork shaft
2. Shift fork
3. Shift drum

Remove main shaft assembly with shift fork.

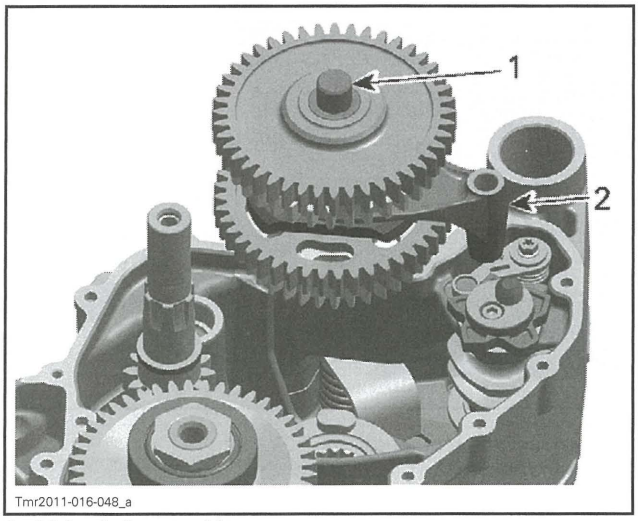

1. *Main shaft assembly*
2. *Shift fork*

Remove shifting sleeve (HIGH range gear) and shift fork.

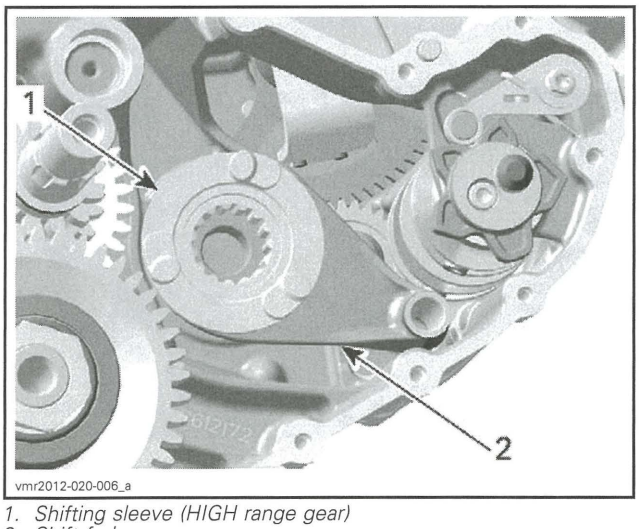

1. *Shifting sleeve (HIGH range gear)*
2. *Shift fork*

When required, remove from main shaft assembly:
- Snap ring (discard)
- HIGH range gear
- LOW range gear
- Needle bearings.

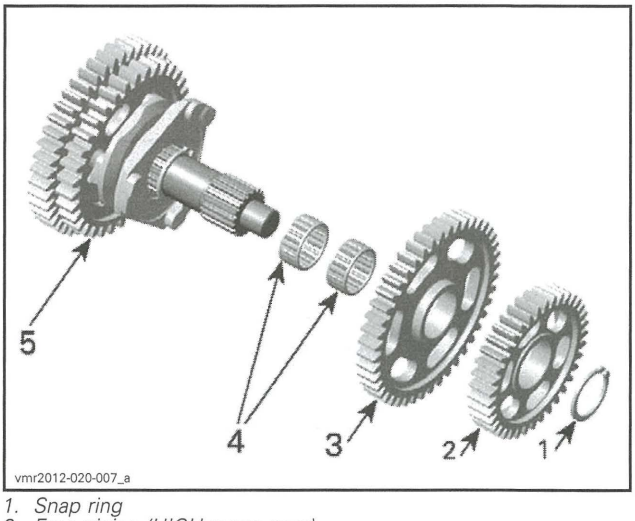

1. *Snap ring*
2. *Free pinion (HIGH range gear)*
3. *Free pinion (LOW range gear)*
4. *Needle bearing*
5. *Main shaft assembly*

Remove from main shaft assembly:
- Snap ring (discard)
- Shifting sleeve (LOW/REVERSE range gear)
- Snap ring (discard)
- REVERSE range gear
- Needle bearing.

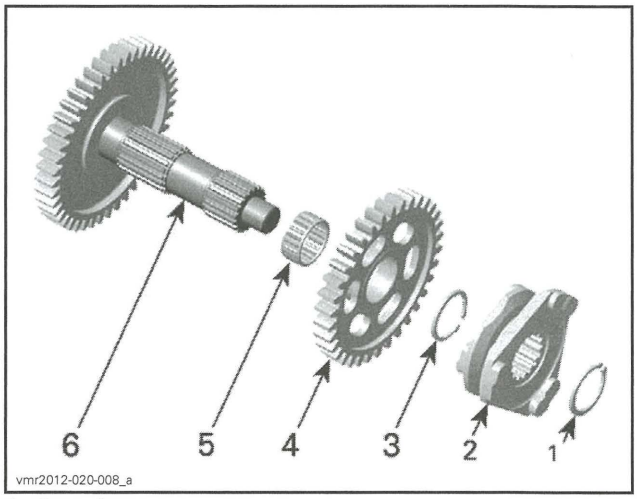

1. *Snap ring*
2. *Shifting sleeve (LOW/REVERSE range gear)*
3. *Snap ring*
4. *Free pinion (REVERSE range gear)*
5. *Needle bearing*
6. *Main shaft assembly*

Gearbox Right Cover

Remove *ACTUATOR* and *GBPS (GEARBOX POSITION SENSOR)*, see procedures in this subsection.

Unscrew all bolts retaining the gearbox right cover.

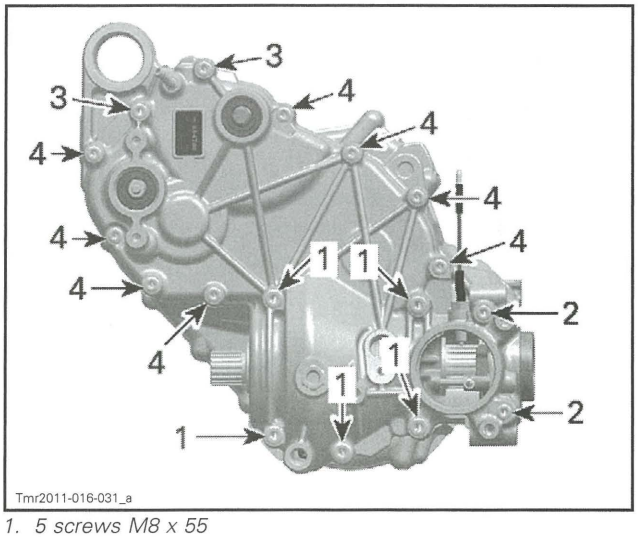

1. *5 screws M8 x 55*
2. *2 screws M6 x 85*
3. *2 screws M6 x 55*
4. *8 screws M6 x 35*

To remove cover, use 2 big screwdrivers.

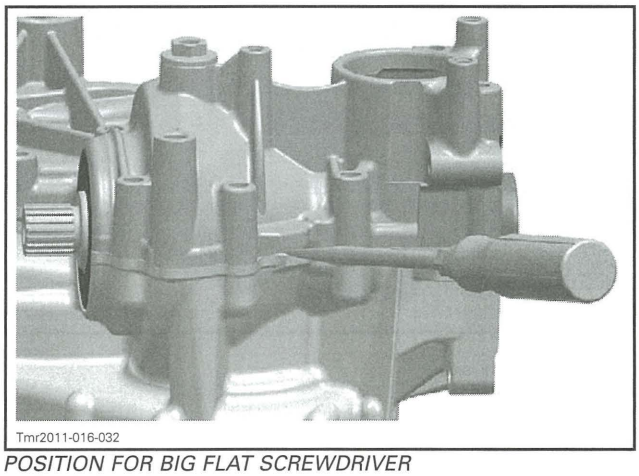

POSITION FOR BIG FLAT SCREWDRIVER

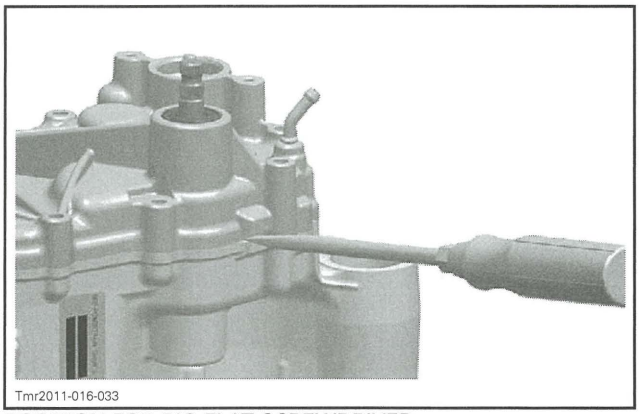

POSITION FOR BIG FLAT SCREWDRIVER

Shift Shaft and Shift Drum

Withdraw shift shaft assembly.

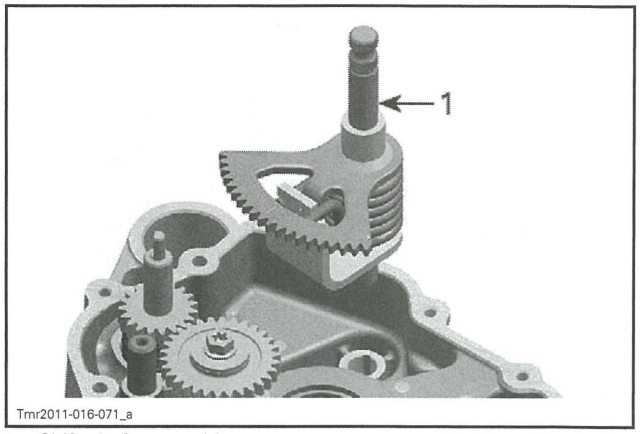

1. *Shift shaft assembly*

Remove screw retaining the shifting intermediate gear.

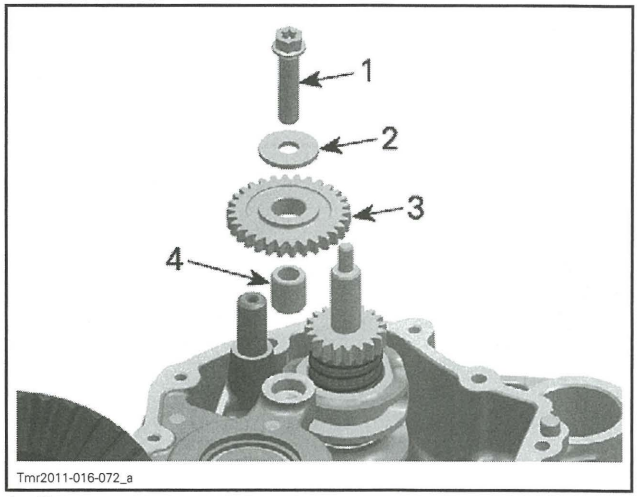

1. *Screw*
2. *Washer*
3. *Intermediate gear*
4. *Dowel pin*

Remove shift fork shaft.

Disengage shift forks from shift drum.

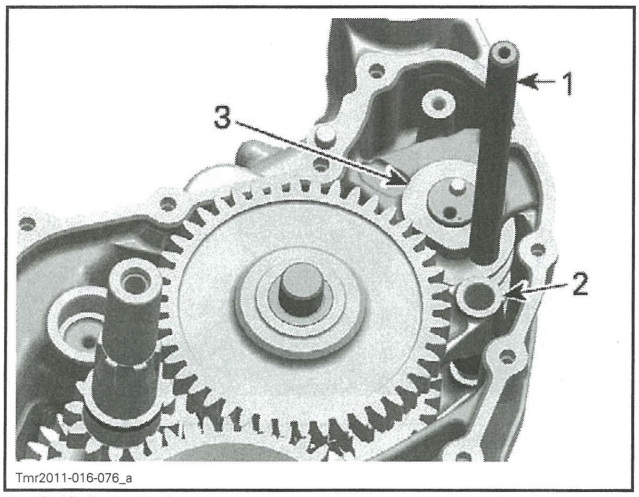

1. *Shift fork shaft*
2. *Shift fork*
3. *Shift drum*

Remove shift drum and thrust washer.

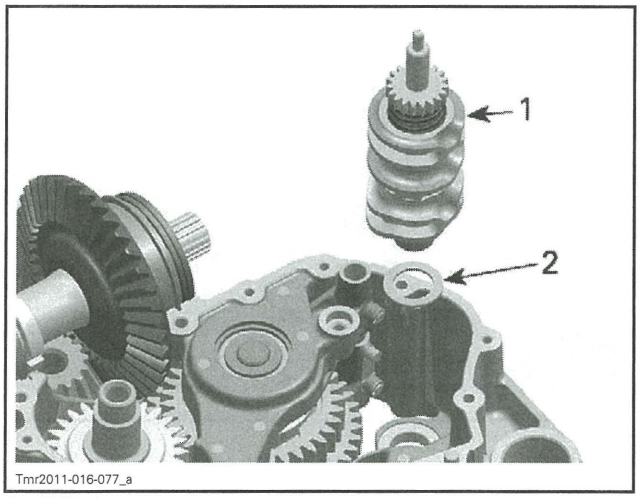

1. *Shift drum*
2. *Thrust washer*

Output Shaft and 4X4 Coupling Mechanism

Remove output shaft from center housing and withdraw 4X4 coupling sleeve.

NOTICE Use a soft hammer to remove output shaft.

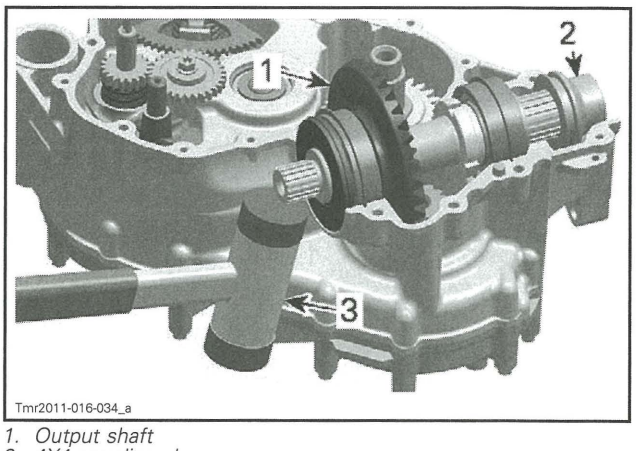

1. *Output shaft*
2. *4X4 coupling sleeve*
3. *Soft hammer*

Remove set screw, coupling fork shaft and coupling fork from right cover.

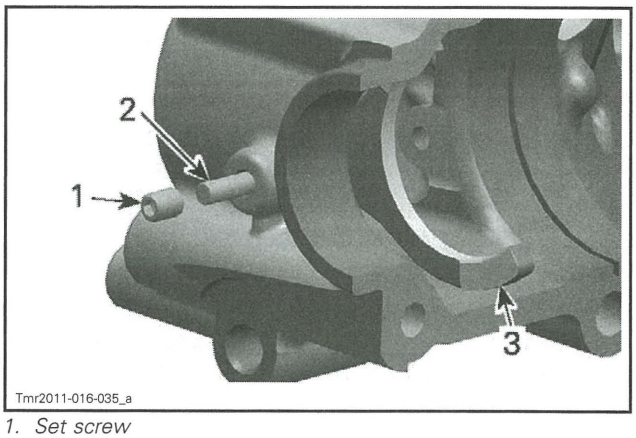

1. *Set screw*
2. *Coupling fork shaft*
3. *Coupling fork*

Countershaft

Use a soft hammer to push out countershaft from gearbox CVT side.

Remove distance sleeve and O-ring.

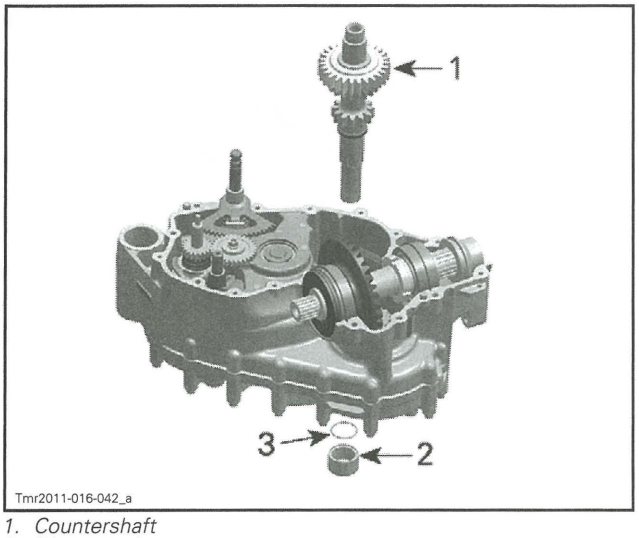

1. *Countershaft*
2. *Distance sleeve*
3. *O-ring*

Gearbox Bearings

If necessary heat housing up to 100°C (212°F) before removing ball bearings.

⚠ WARNING

Clean oil, outside and inside, from housing before heating.

NOTICE **Always support gearbox housings properly when ball bearings are removed. Housing damages may occur if this procedure is not performed correctly.**

To remove ball bearings of countershaft (right cover) and main shaft (left cover) use following tool.

REQUIRED TOOL	
BLIND HOLE BEARING PULLER SET (P/N 529 036 117)	

Remove screw securing the countershaft bearing in the left cover.

For ball bearings of countershaft (left cover) and main shaft (center housing) push with a suitable puller from outside in.

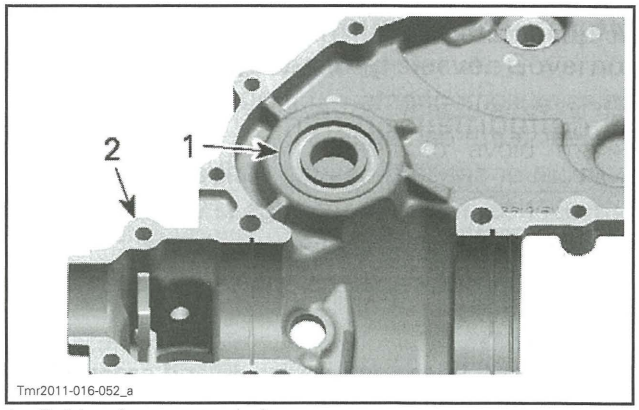

1. *Ball bearing countershaft*
2. *Right cover*

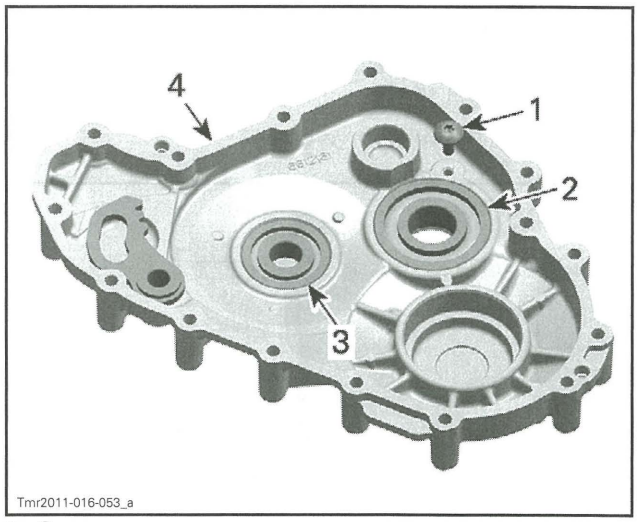

1. *Screw*
2. *Ball bearing countershaft*
3. *Ball bearing main shaft*
4. *Left cover*

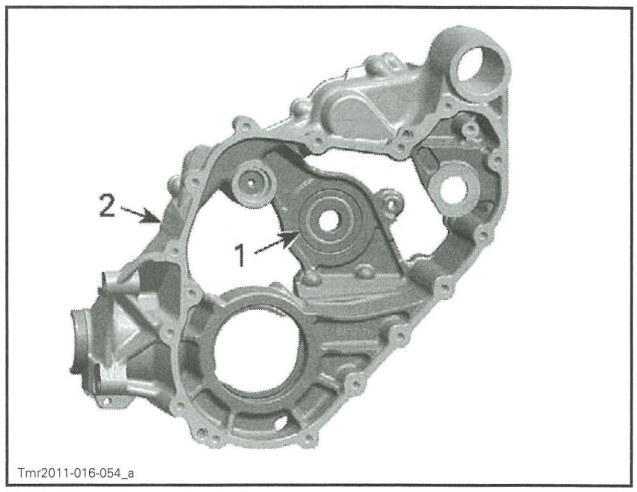

1. *Ball bearing main shaft*
2. *Center housing*

Gearbox Inspection

Always verify for the following when inspecting gearbox components:

- Gear teeth damage
- Worn or scoured bearing surfaces
- Rounded engagement dogs and slots
- Worn shift fork engagement groove
- Worn splines on shafts and shifting sleeves.

Bearings

Check if ball bearings turn freely and smoothly.

Check all bearings, bearing points, tooth flanks and taper grooves.

Free Pinions

NOTE: Always replace snap rings and use special pliers to install them.

Check free pinions for wear.

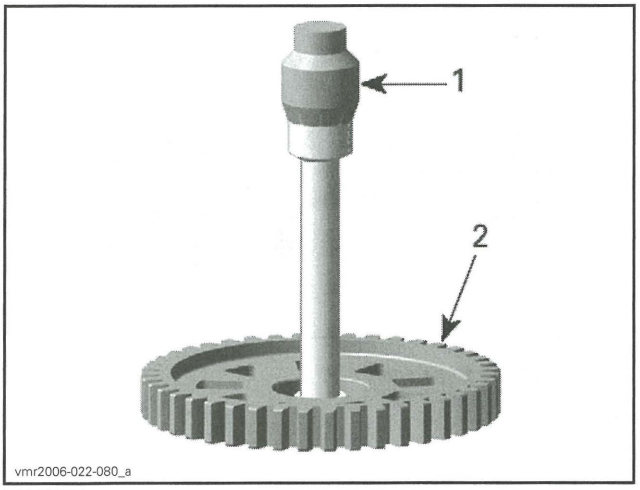

TYPICAL
1. *Micrometer*
2. *Free pinion*

DIAMETER FREE PINION	
NEW	29.000 mm to 29.013 mm (1.1417 in to 1.1422 in)
SERVICE LIMIT	29.015 mm (1.1423 in)

Shifting Sleeves

Check shifting sleeves for worn inner splines and rounded or damaged engagement dogs.

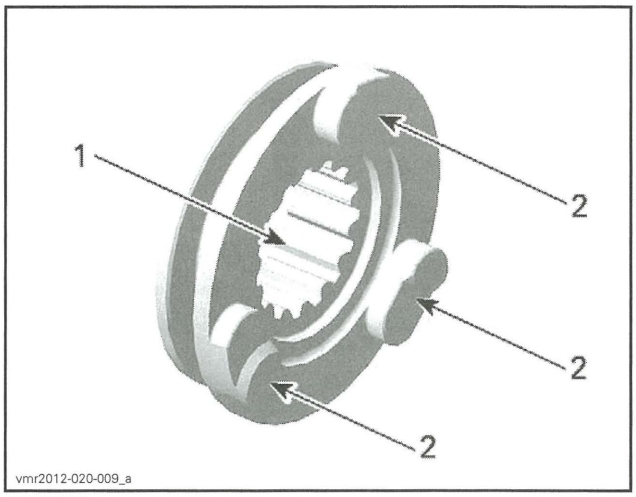

TYPICAL
1. *Inner splines*
2. *Engagement dogs*

Measure the width of shift fork engagement groove.

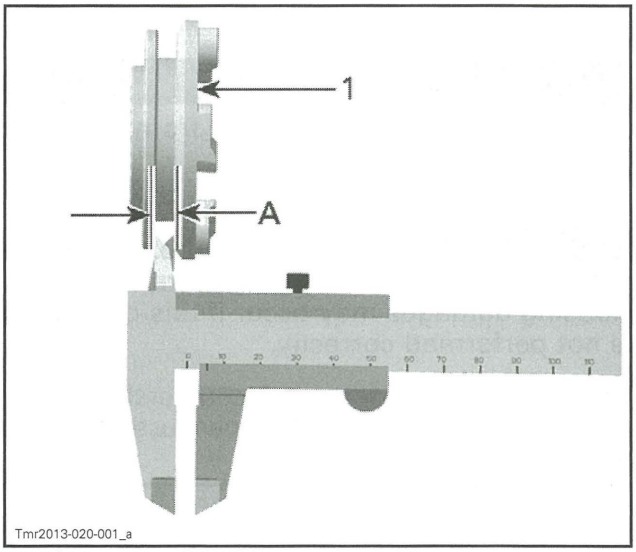

TYPICAL
1. *Shifting sleeve*

A. Width of shift fork engagement groove

WIDTH OF SHIFT FORK ENGAGEMENT GROOVE	
NEW	5.30 mm to 5.40 mm (.209 in to .213 in)
SERVICE LIMIT	5.50 mm (.217 in)

Shafts

Check bearing pin of reverse intermediate gear for wear.

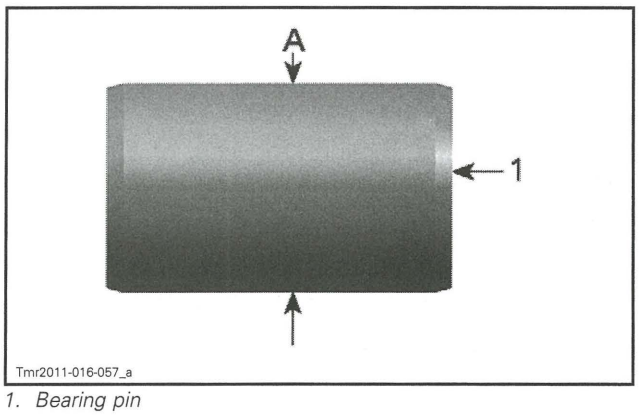

1. Bearing pin
A. Outer diameter

BEARING PIN OUTER DIAMETER	
NEW	24.987 mm to 25.000 mm (.984 in to .984 in)
SERVICE LIMIT	24.977 mm (.9833 in)

Check countershaft bearing journals for wear.

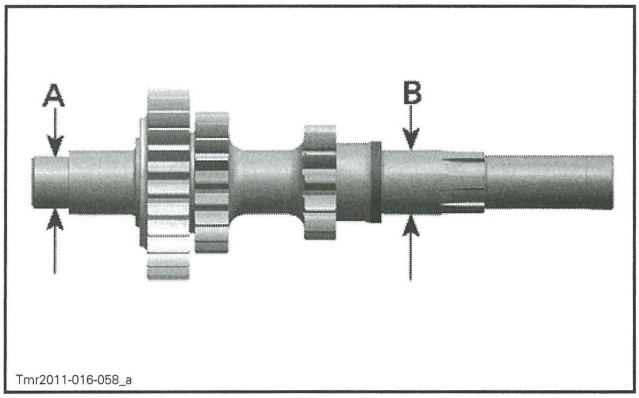

A. MAG side
B. Bearing journal CVT side

COUNTERSHAFT BEARING JOURNALS	
MAG SIDE	
NEW	19.977 mm to 19.990 mm (.786 in to .787 in)
SERVICE LIMIT	19.973 mm (.786 in)
CVT SIDE	
NEW	24.977 mm to 24.990 mm (.983 in to .984 in)
SERVICE LIMIT	24.970 mm (.983 in)

Check main shaft for wear.

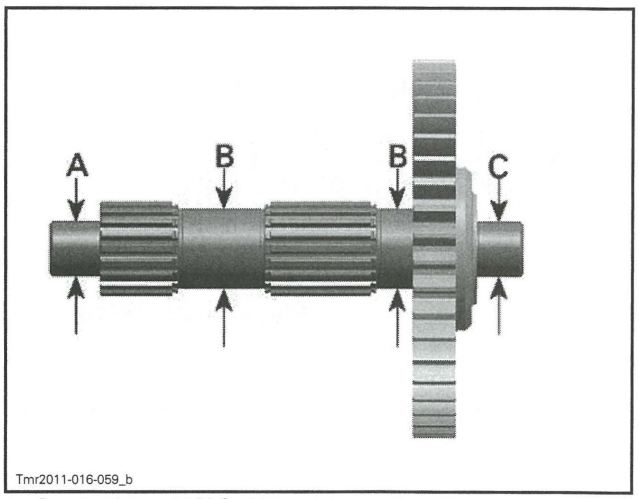

A. Bearing journal MAG side
B. Free pinion bearing
C. Bearing journal CVT side

MAIN SHAFT	
FREE PINION BEARING	
NEW	24.987 mm to 25.000 mm (.984 in to .984 in)
SERVICE LIMIT	24.984 mm (.984 in)
BEARING JOURNAL CVT/MAG SIDE	
NEW	16.980 mm to 16.991 mm (.669 in to .669 in)
SERVICE LIMIT	16.976 mm (.668 in)

Shift Shaft

Check shift shaft for worn splines and gears.

Check shift shaft spring for damages.

Shift Drum

NOTICE Do not disassemble shift drum.

Check if shifting gates move easily on shift drum splines and check condition of springs.

Check shift drum tracks for scouring or heavy wear, like rounded engagement slots.

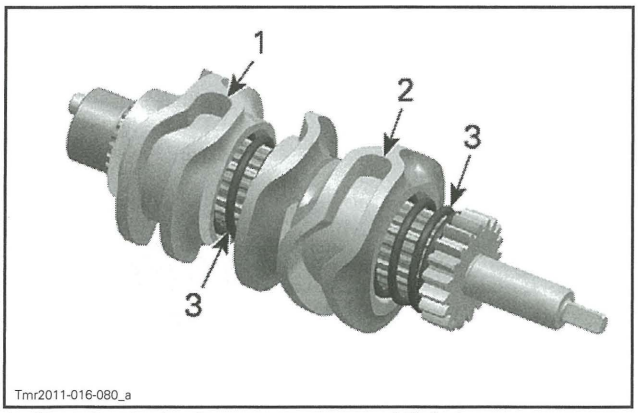

1. Track for the low/reverse range gear shift fork
2. Track for the high range gear shift fork
3. Springs

Shift Forks

Check both shift forks for visible damage, wear or bent shift fork claws.

Check engagement rollers for wear and smooth movement.

Measure the shift fork claw thickness.

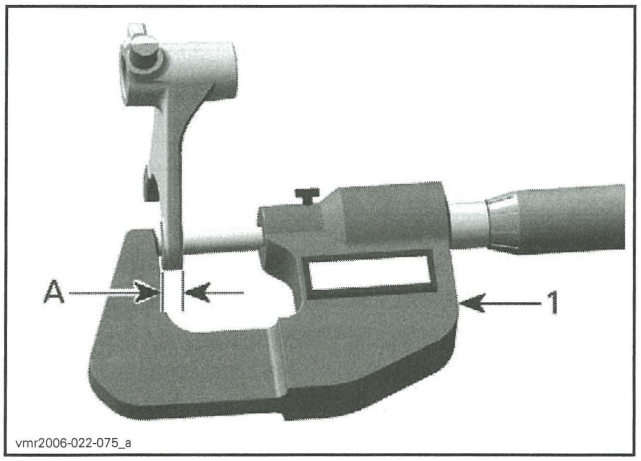

1. Micrometer
A. Shift fork claw thickness

SHIFT FORK CLAW THICKNESS	
NEW	5.10 mm to 5.20 mm (.201 in to .205 in)
SERVICE LIMIT	5.00 mm (.197 in)

Shift Fork Shaft

Check shift fork shaft for visible damage or wear.

Check if shift fork shaft is straight.

Index Lever and Parking Lever

Index lever with roller must move freely.

Check parking lever for cracks or other damages.

Output Shaft

Check output shaft and its gear for cracks, bend, pitting or other visible damages.

Check output shaft splines for wear or other damages.

Check if the output shaft bearings turn freely and smoothly.

Replace oil seal if brittle, hard or damaged.

4X4 Coupling Sleeve

Check splines of coupling sleeve for wear or other damages.

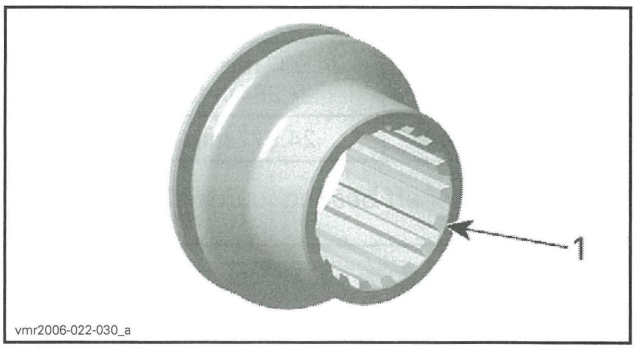

1. Inspect splines

Measure the coupling sleeve groove width.

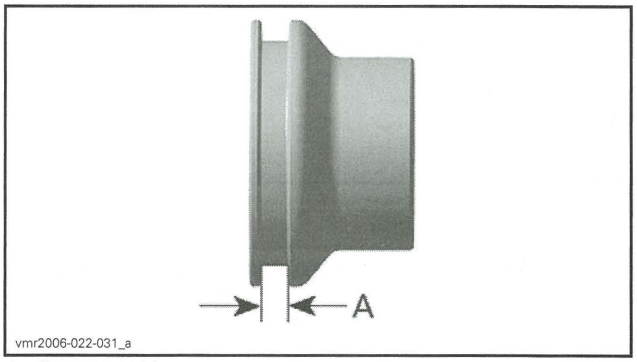

A. Groove width

COUPLING SLEEVE GROOVE WIDTH	
NEW	5.25 mm to 5.35 mm (.207 in to .211 in)
SERVICE LIMIT	5.50 mm (.217 in)

Coupling Fork

Check coupling fork for visible damage, wear or bent coupling fork claws.

Check coupling fork claw thickness.

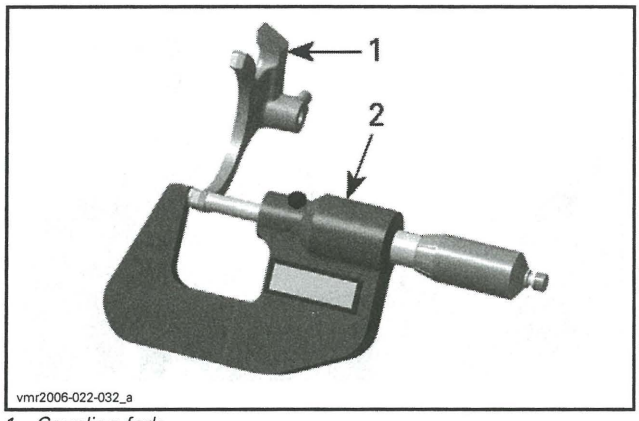

1. *Coupling fork*
2. *Micrometer*

COUPLING FORK CLAW THICKNESS	
NEW	4.95 mm to 5.05 mm (.195 in to .199 in)
SERVICE LIMIT	4.80 mm (.189 in)

Gearbox Assembly

The assembly of gearbox is essentially the reverse of disassembly procedure. However, pay attention to the following details.

Gearbox Bearings

Unless otherwise instructed, never use hammer to install ball bearings. Use press machine only.

If necessary heat housings up to 100°C (212°F) before installing ball bearings.

⚠ WARNING

Clean oil, outside and inside, from housing before heating.

Place new bearing in freezer for 10 minutes before installation.

Use a suitable installer for installing ball bearings of countershaft and main shaft.

NOTE: Place gearbox housings on a wood stand before installing ball bearings.

Install new oil seals with the proper installer (refer to *OIL SEALS* in this subsection).

Main Shaft and Shift Forks

Install NEW snap rings.

NOTE: Ensure snap rings are installed in the grooves properly.

Install free pinion (REVERSE range gear) and shifting sleeve (LOW/REVERSE range gear) properly.

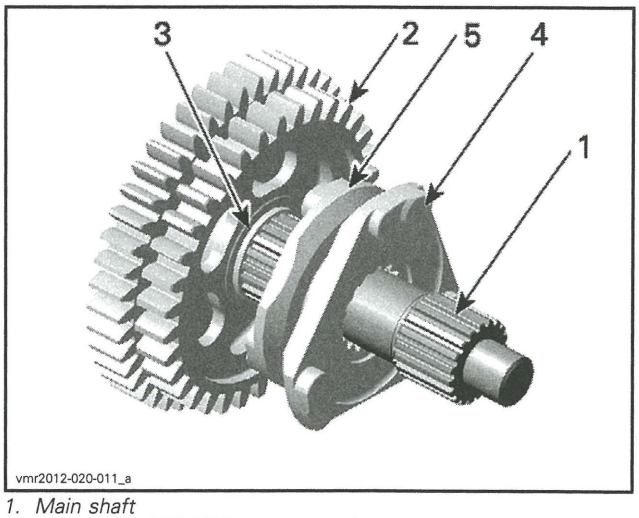

1. *Main shaft*
2. *Free pinion (REVERSE range gear)*
3. *Snap ring*
4. *Shifting sleeve (LOW/REVERSE range gear)*
5. *Shifting dogs (REVERSE range gear)*

Collars of free pinion (LOW range gear) and free pinion (HIGH range gear) must point together.

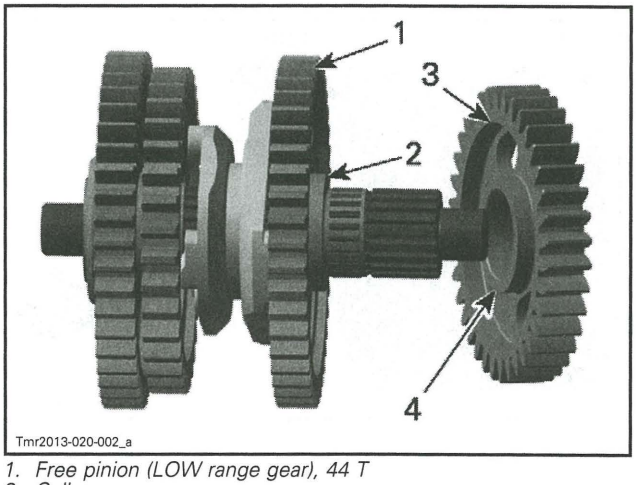

1. *Free pinion (LOW range gear), 44 T*
2. *Collar*
3. *Free pinion (HIGH range gear), 36 T*
4. *Collar*

Place shifting sleeve (HIGH range gear) with shift fork in the center of on main shaft bearing in center housing.

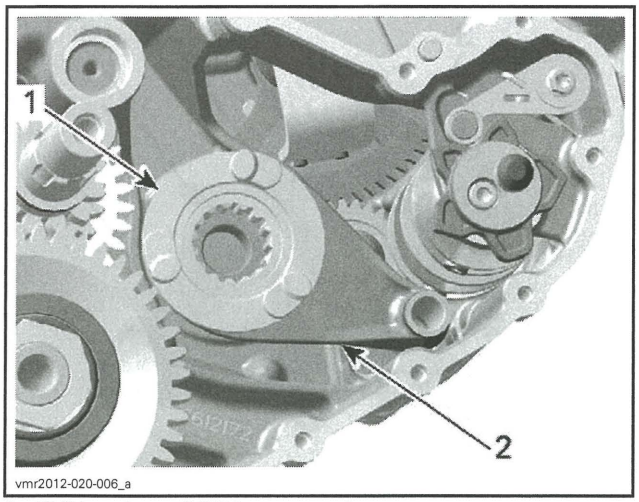

1. *Shifting sleeve (HIGH range gear)*
2. *Shift fork*

Carefully fit main shaft assembly with shift fork (LOW/REVERSE range gear) into inner splines of shifting sleeve (HIGH range gear).

Install reverse intermediate gear.

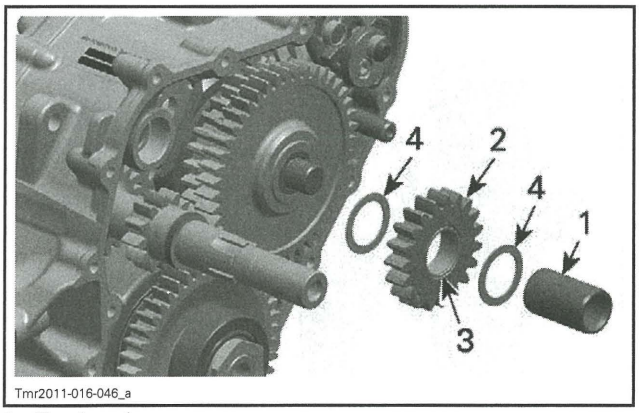

1. *Bearing pin*
2. *Reverse intermediate gear*
3. *Needle bearing*
4. *Thrust washers*

Finally engage shift forks in shift drum and install shift fork shaft.

NOTE: Run all gears as a final function check before installing left housing.

Index Lever and Index Washer

Fit step ring into index lever.

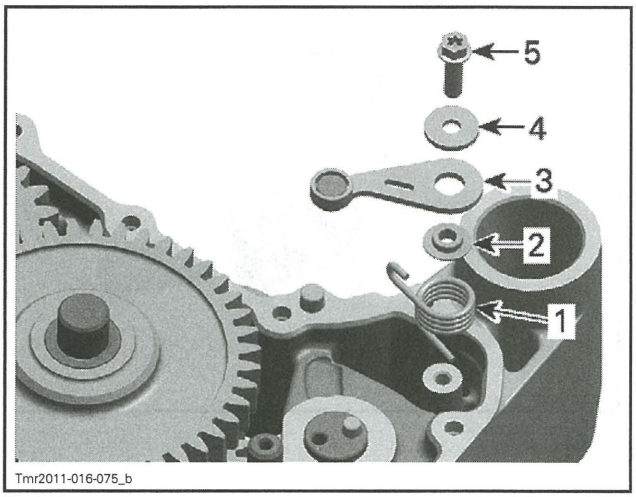

1. *Index spring*
2. *Step ring*
3. *Index lever*
4. *Washer*
5. *Screw*

Install index washer on shift drum.

Insert a flat screwdriver in the slot of the index lever, turn screwdriver clockwise and engage lever in index washer in neutral position as per following illustration.

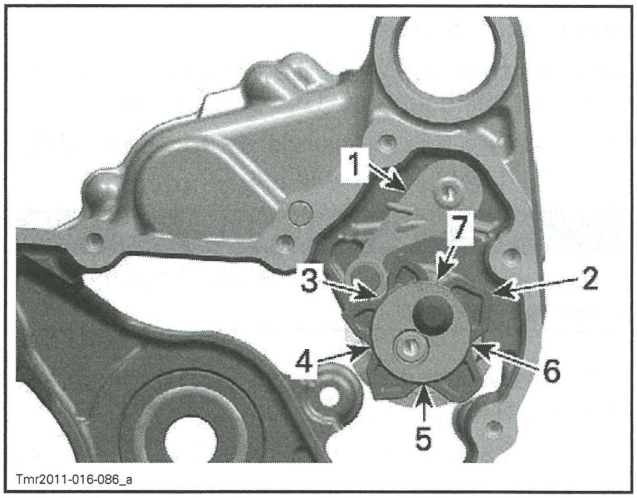

1. *Index lever*
2. *Index washer*
3. *Neutral position*
4. *High range gear position*
5. *Low range gear position*
6. *Parking position*
7. *Reverse range gear position*

Output Shaft and 4X4 Coupling Mechanism

Install coupling sleeve onto the output shaft.

Place the output shaft with oil seal and coupling sleeve into the center housing.

NOTE: If same oil seal is installed, turn oil seal 90° offset to its original position to avoid leakage at housing mating surface.

Install coupling fork, coupling fork shaft and set screw in right cover before applying sealant to the mating surface.

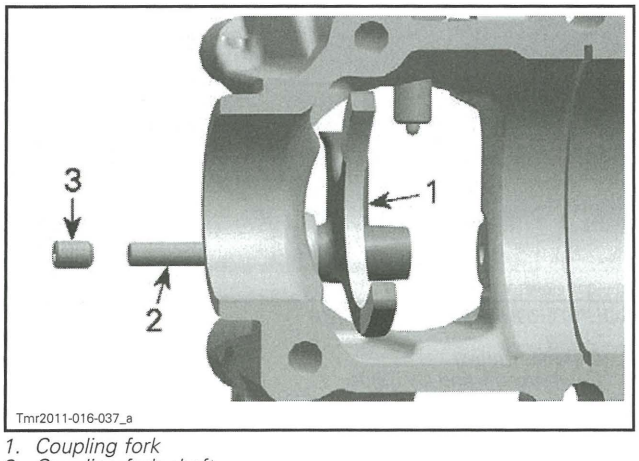

1. *Coupling fork*
2. *Coupling fork shaft*
3. *Set screw*

Shift Shaft and Shift Drum

Install shift drum and shift shaft.

Install shifting intermediate gear. Align its marks with the marks on shift drum gear and shift shaft.

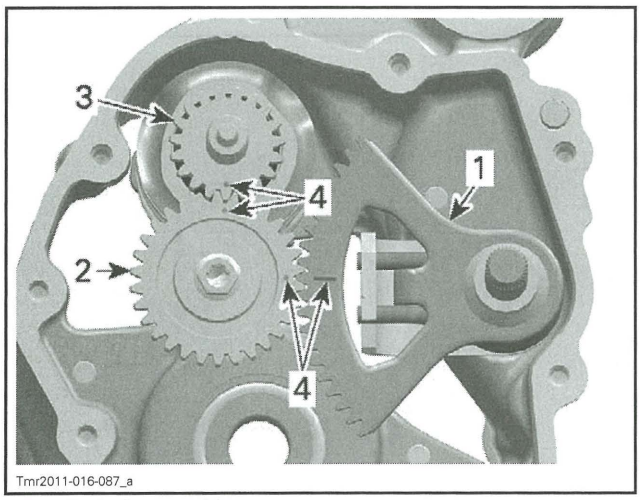

1. *Shift shaft assembly*
2. *Shifting intermediate gear*
3. *Shift drum gear*
4. *Marks*

Engage both shift fork pins in their corresponding groove on the shift drum.

Install shift fork shaft.

NOTE: Turn gears to validate proper operation.

Sealing Compound Application

NOTE: Unless otherwise specify, the procedure to apply the sealant is the same for right or left cover.

Clean all metal components in a solvent.

Gearbox housing mating surfaces are best cleaned using a combination of LOCTITE CHISEL (GASKET REMOVER) (P/N 413 708 500) and a brass brush. Brush a first pass in one direction then make the final brushing perpendicularly (90°) to the first pass cross (hatch).

NOTICE **Do not wipe with rags. Use a new clean hand towel only.**

IMPORTANT: When beginning the application of the gear housing sealant, the assembly and the first torquing should be done within 10 minutes. It is suggested to have all you need on hand to save time.

Use LOCTITE 5910 (P/N 293 800 081) on mating surfaces.

Use a plexiglass plate and apply some sealant on it. Use a soft rubber roller (50 mm - 75 mm (2 in - 3 in)), available in arts products suppliers for printing, and roll the sealant to get a thin uniform coat on the plate (spread as necessary). When ready, apply the sealant on gear housing mating surfaces.

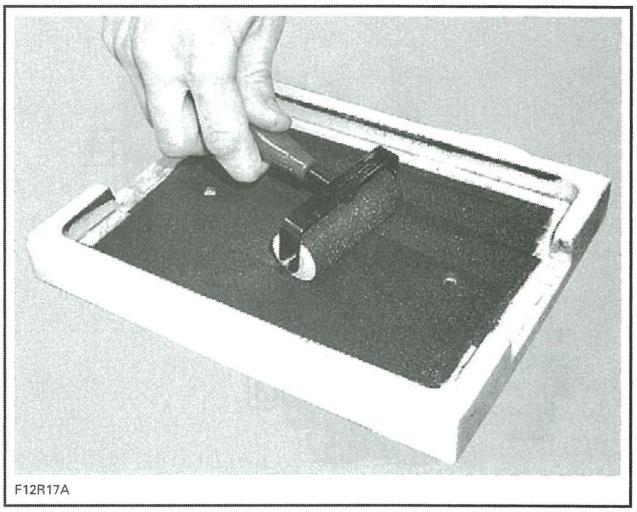

Do not apply in excess as it will spread out inside gear housing.

NOTE: It is recommended to apply this specific sealant as described here to get a uniform application without lumps. If you do not use the roller method, you may use your finger to uniformly distribute the sealant (using a finger will not affect the adhesion).

Left Cover

Apply sealing compound on mating surfaces of central housing. Refer to *SEALING COMPOUND APPLICATION*.

At installation of left cover, engage parking lock lever slot onto index washer pin.

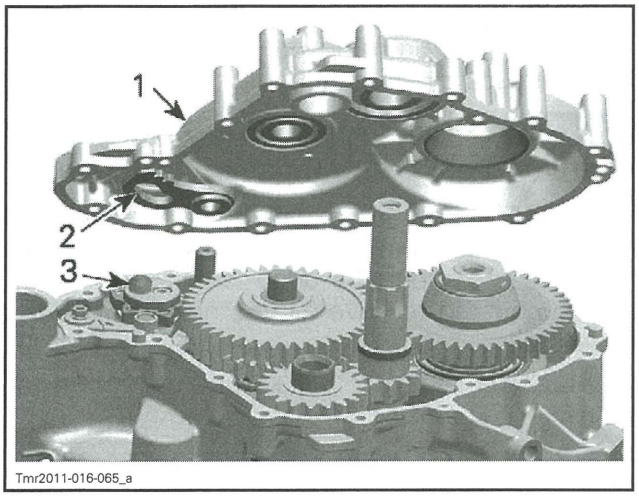

Tmr2011-016-065_a

1. *Left cover*
2. *Parking lock lever slot*
3. *Index washer pin*

Install all screws on left cover and tighten them as per following sequence.

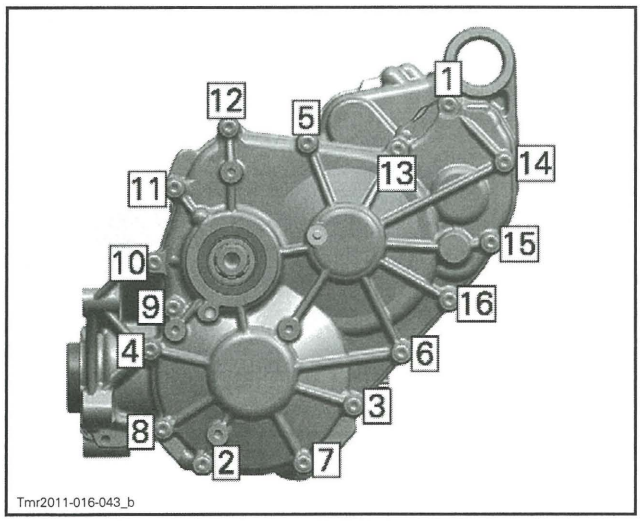

Tmr2011-016-043_b

M6 SCREWS - LEFT COVER	
Tightening torque	10 N•m ± 1 N•m (89 lbf•**in** ± 9 lbf•**in**)

Install O-ring including distance sleeve on countershaft CVT side.

NOTICE **Place O-ring including distance sleeve right away. Chamfered bore of distance sleeve has to face the gearbox.**

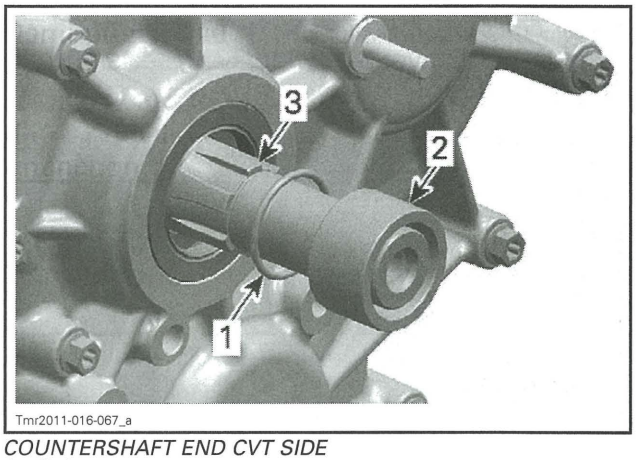

Tmr2011-016-067_a

COUNTERSHAFT END CVT SIDE
1. *O-ring*
2. *Distance sleeve*
3. *Countershaft end CVT side*

Right Cover

Apply sealing compound on mating surfaces of central housing. Refer to *SEALING COMPOUND APPLICATION*.

To install the right cover align the coupling fork with the groove in the coupling sleeve.

Install all screws on right cover and tighten them as per following sequence.

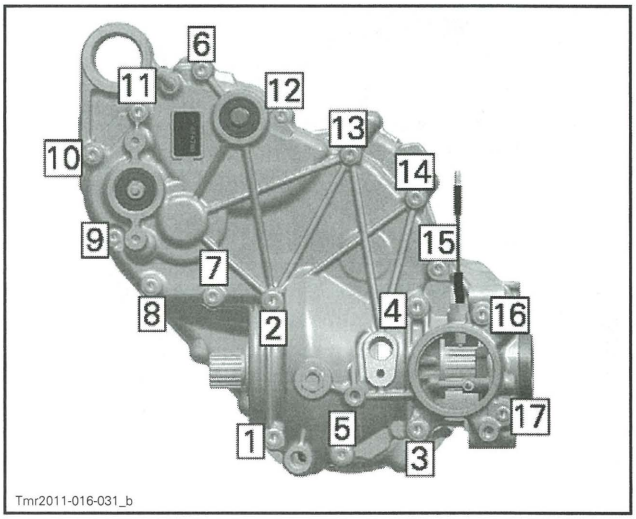

Tmr2011-016-031_b

SCREWS - RIGHT COVER	
Tightening torque - M6	10 N•m ± 1 N•m (89 lbf•**in** ± 9 lbf•**in**)
Tightening torque - M8	25 N•m ± 3 N•m (18 lbf•ft ± 2 lbf•ft)

Install the actuator, refer to *ACTUATOR*.

Gearbox Installation

For installation reverse the removal procedure. Pay attention to following.

Before gearbox installation check O-ring in bearing cover if brittle, hard or damaged. Replace if necessary.

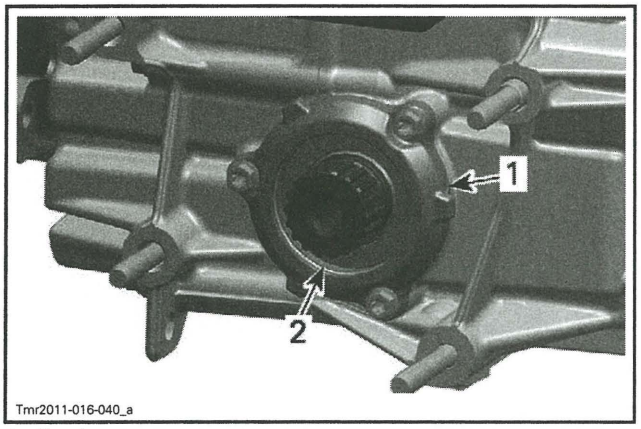

1. Bearing cover
2. O-ring

After installation refill gearbox oil, refer to *PERIODIC MAINTENANCE PROCEDURES*.

SHIFTER

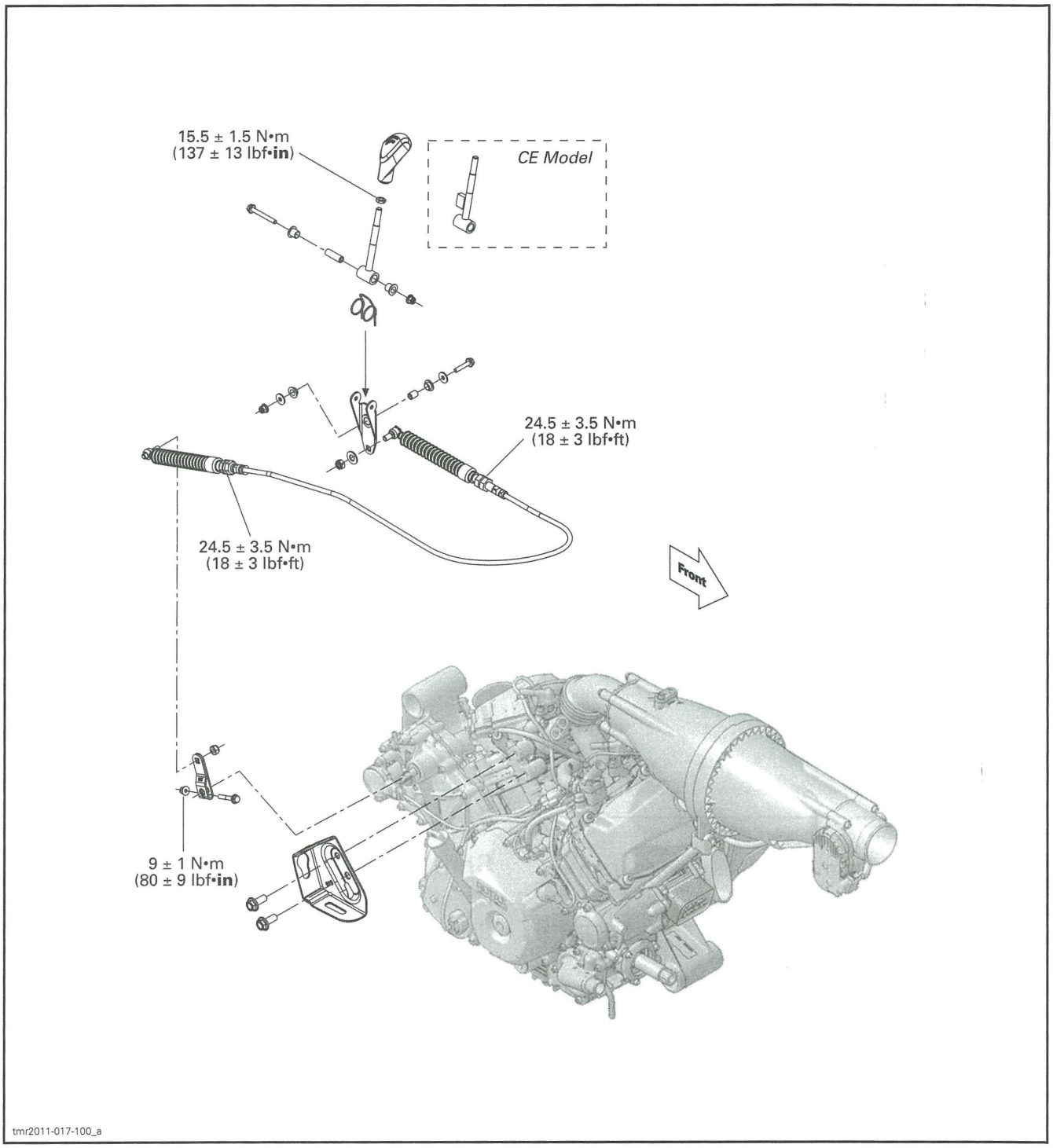

tmr2011-017-100_a

PROCEDURES

SHIFT LEVER

Shift Lever Access

1. Refer to *BODY* subsection and remove the following components:
   - Seats
   - Lower console
   - RH and LH lateral console panels.

NOTE: Move upper console upwards to access to lower console.

Shift Lever Removal

1. Remove body parts as required. Refer to *SHIFT LEVER ACCESS* in this subsection.
2. Place shift lever in **NEUTRAL** position.
3. Secure vehicle using wheel blocks.
4. Unscrew shift lever handle.

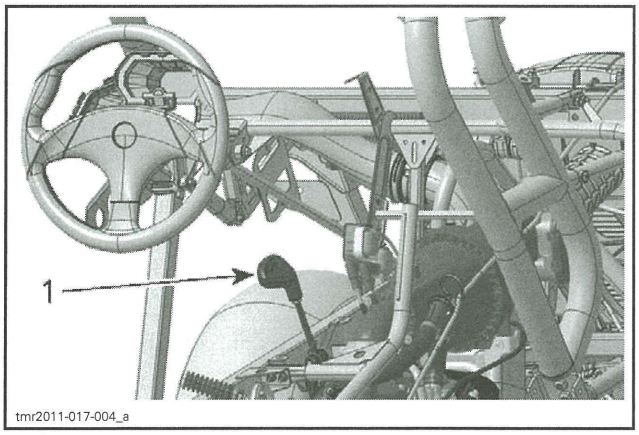

1. Shift lever handle

5. On CE models, remove locking device from vehicle.

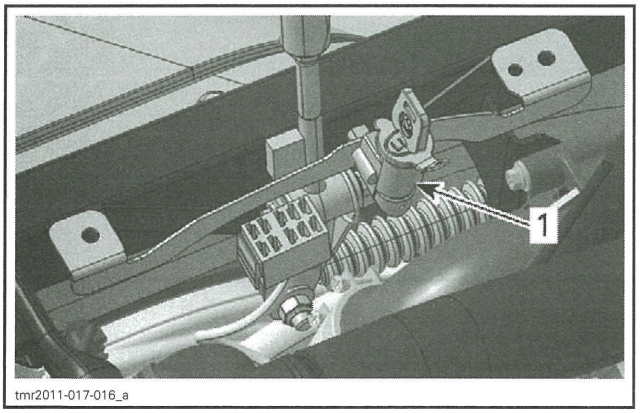

CE MODELS
1. Locking device

6. Detach shifter cable from shift lever by removing nut and washer.

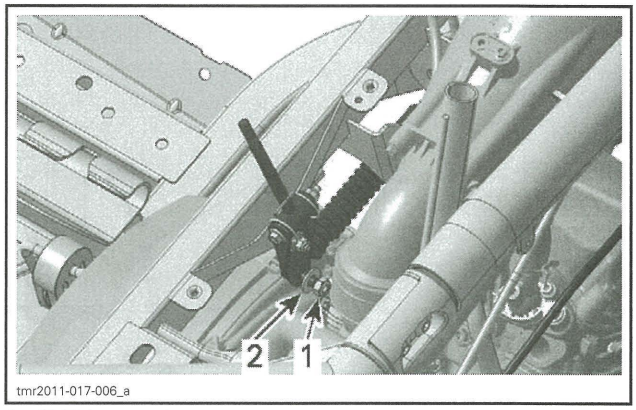

1. Shift lever nut
2. Shift lever washer

7. Remove shift lever pivot bolt, washers and nut.

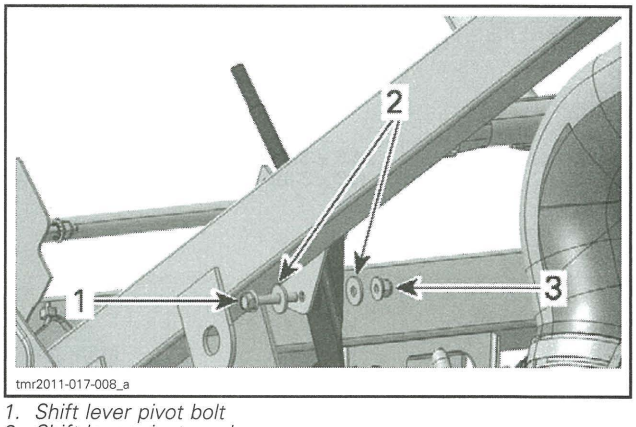

1. Shift lever pivot bolt
2. Shift lever pivot washers
3. Shift lever pivot nut

8. Remove shift lever.

Shift Lever Inspection

Check shift lever for bending or cracks.

Check spring and bushing condition.

Replace all damaged parts.

Shift Lever Installation

The installation is the reverse of the removal procedure. However, pay attention to the following.

Adjust shift lever handle as per the following illustration.

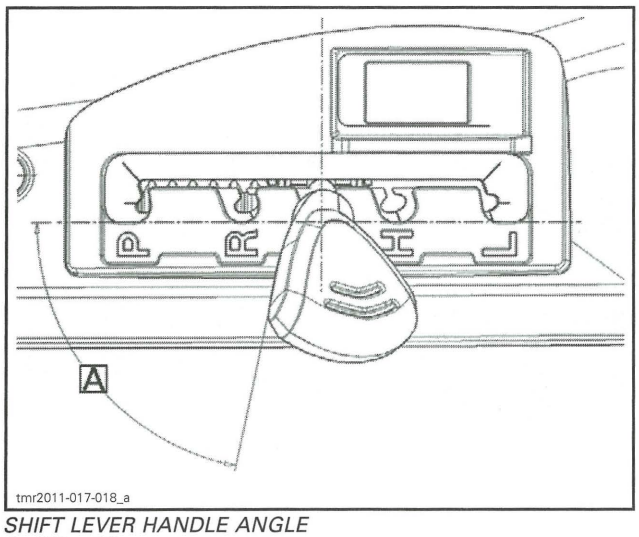

SHIFT LEVER HANDLE ANGLE
A. 78° ± 5°

Tighten shift lever handle nut to specification.

SHIFT LEVER HANDLE NUT TORQUE
15.5 N•m ± 1.5 N•m (137 lbf•**in** ± 13 lbf•**in**)

Adjust shifter cable, refer to *SHIFTER CABLE ADJUSTMENT* in this subsection.

Check if shift lever works properly in all positions.

SHIFTER CABLE

Shifter Cable Adjustment

1. Place shift lever in **NEUTRAL** position.

NOTICE Move vehicle back and forth to ensure gearbox is set in neutral position.

2. Secure vehicle using wheel blocks.
3. Remove body parts as required. Refer to *SHIFT LEVER ACCESS* in this subsection.
4. Loosen cable adjustment nuts.

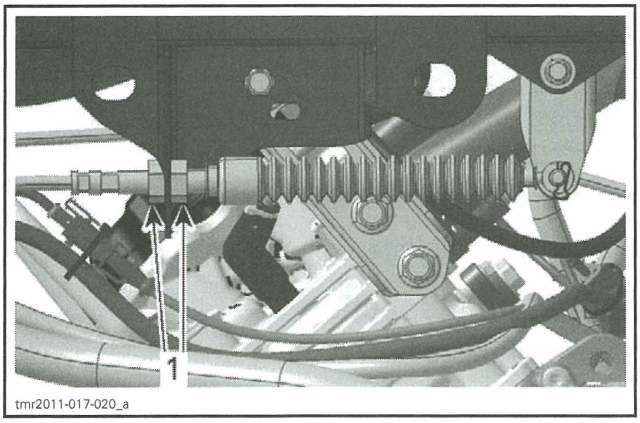

1. Adjustment nuts

5. Adjust cable nuts in order to center shift lever in neutral notch.

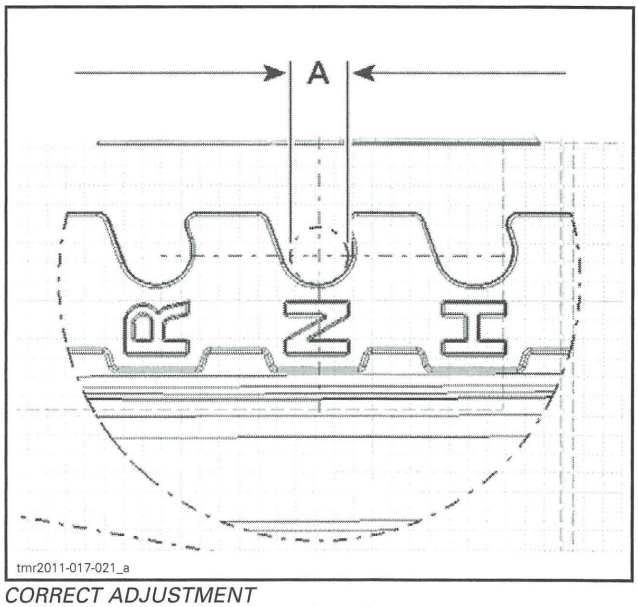

CORRECT ADJUSTMENT
A. Shift lever centered in neutral notch

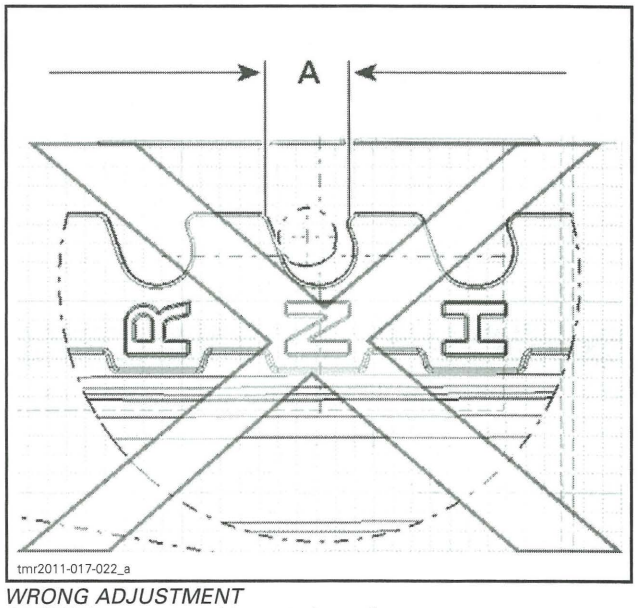

WRONG ADJUSTMENT
A. Shift lever centered in neutral **opening**

6. Tighten cable adjustment nuts to specification.

ADJUSTMENT NUTS TORQUE
24.5 N•m ± 3.5 N•m (18 lbf•ft ± 3 lbf•ft)

7. Move shift lever in **R** position then in **H** position.

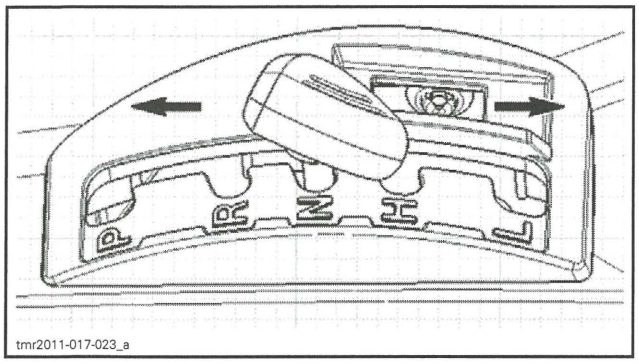

8. Place shift lever in **NEUTRAL** position.
9. Check if shift lever is properly centered in neutral notch. Readjust as required.

NOTE: To properly check shift lever alignment into notch, move shift lever toward the RH side then let it return to position.

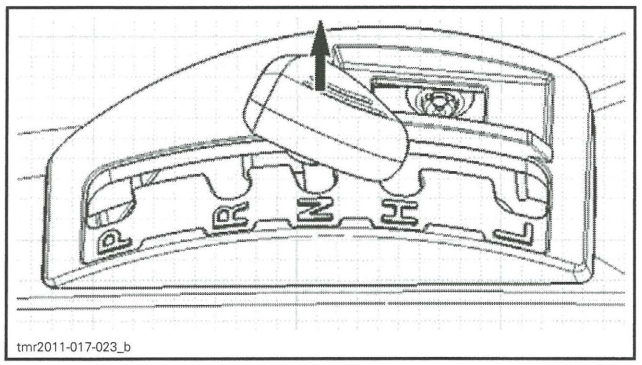

10. Test the shifter to confirm that the system works properly in all positions.

⚠ WARNING

After adjustment, make sure that PARK position works properly.

SHIFT PLATE

Shift Plate Removal

NOTE: Do not remove shift plate needlessly.

1. Remove shifter cable from shift plate.

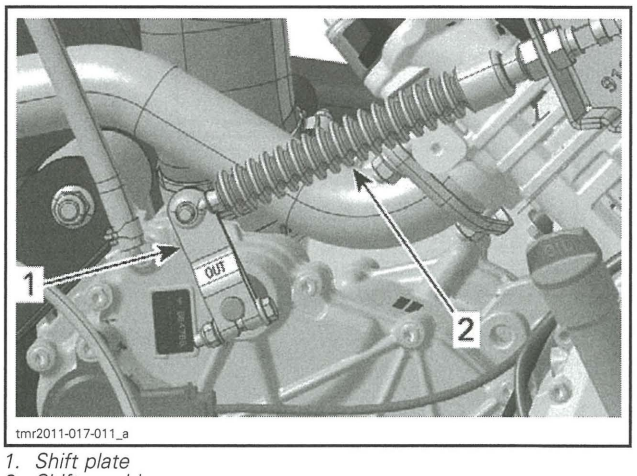

1. Shift plate
2. Shifter cable

2. Index shift plate and shift shaft.

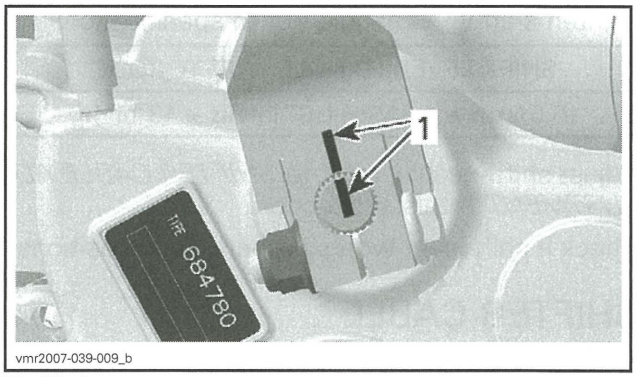

TYPICAL
1. Trace a mark on both parts

3. Remove shift plate nut and bolt.

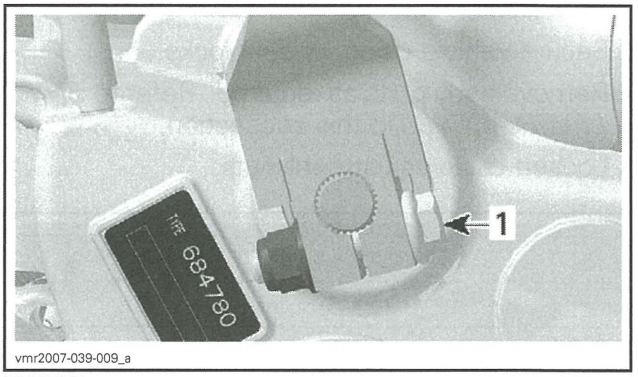

TYPICAL
1. Shift plate bolt

4. Remove shift plate.

Shift Plate Inspection

Check shift plate for:
- Cracks
- Bending
- Spline condition.

Shift Plate Installation

The installation is the reverse of the removal procedure. However, pay attention to the following.

Place gearbox in **NEUTRAL** position before shift plate installation.

Install and align shift plate using marks previously traced.

If shift plate is installed on a new engine, adjust it as per the following illustration.

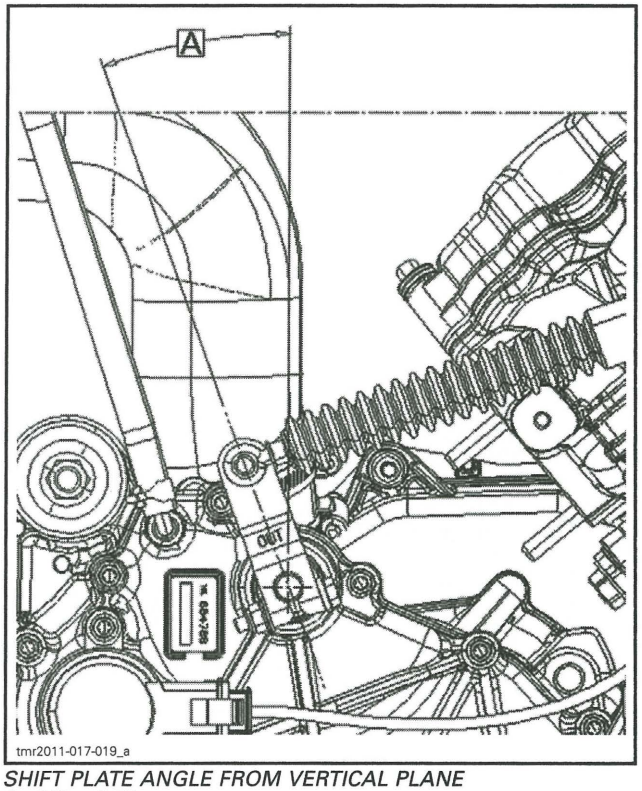

SHIFT PLATE ANGLE FROM VERTICAL PLANE
A. 20° ± 2.5°

Adjust shifter cable, refer to *SHIFTER CABLE ADJUSTMENT* in this subsection.

Tighten shift plate nut to specification.

SHIFT PLATE NUT TORQUE
9 N•m ± 1 N•m (80 lbf•**in** ± 9 lbf•**in**)

ENGINE MANAGEMENT SYSTEM (EMS)

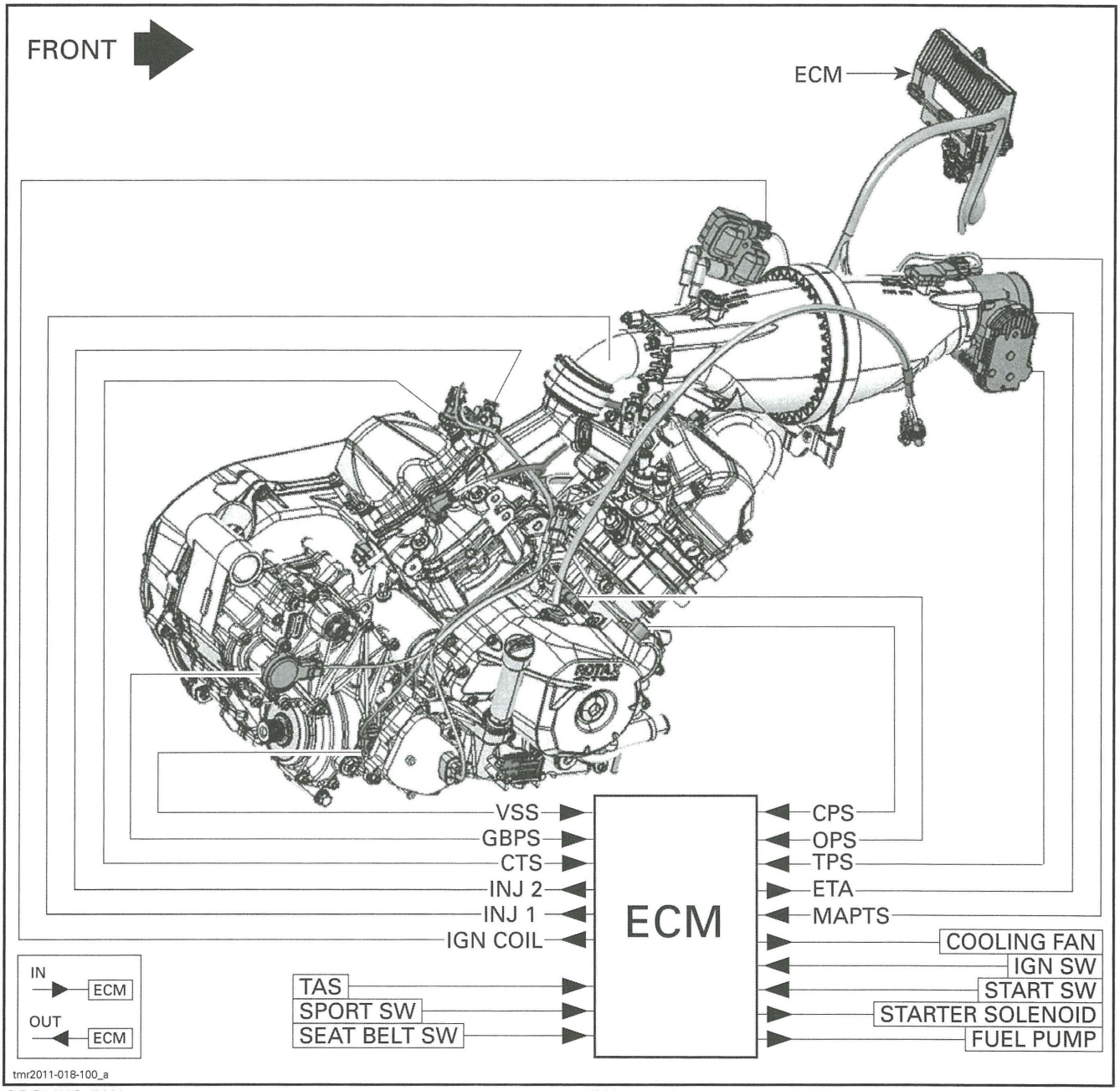

COOLING FAN
CPS = Crankshaft Position Sensor
CTS = Cooling Temperature Sensor
ECM = Engine Control Module
ETA = Electric Throttle Actuator
FRONT
FUEL PUMP
GBPS = GearBox Position Sensor
IGN COIL = Ignition coil
IGN SW = Ignition switch
IN = Input
INJ 1= Injector 1
INJ 2 = Injector 2
MAPTS = Manifold Air Pressure/Temperature Tensor
OPS = Oil Pressure Switch
OUT = Output
SEAT BELT SWITCH
SPORT SWITCH
START SWITCH
STARTER SOLENOID
SW = Switch
TAS = Throttle Accelerator Sensor
TPS = Throttle Position Sensor
VSS = Vehicle Speed Sensor

GENERAL

SYSTEM DESCRIPTION

A highly advanced engine management system (EMS) is used to ensure a high power output with cleaner combustion.

There are 7 main systems that are controlled by the engine management system (EMS):

1. Electronic Fuel Injection (EFI)
2. Intelligent throttle control
3. Cooling system (cooling fan)
4. Ignition system
5. Starting system
6. Fuel pump system
7. D.E.S.S. system.

NOTE: For further information related to these systems, refer to the applicable subsection.

The ECM (Engine Control Module) is the central point of the engine management system.

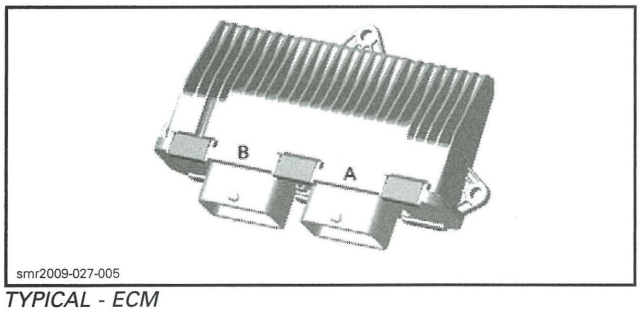

TYPICAL - ECM

The ECM is located under the dashboard on the driver's side, above the control pedals.

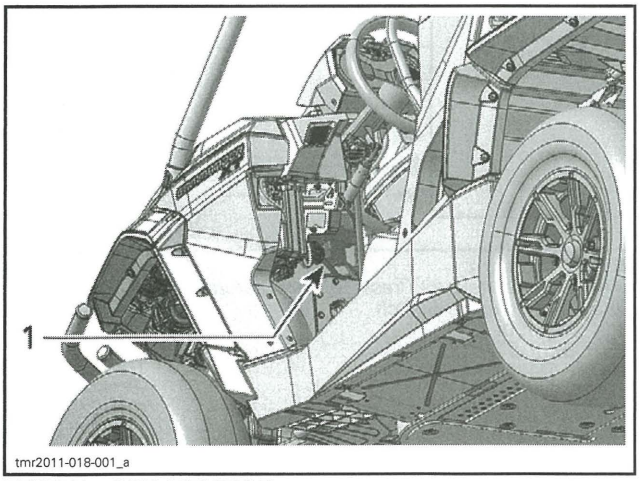

TYPICAL - ECM LOCATION
1. ECM location

The ECM reads input signals from various switches, controls, and sensors, that it compares to pre-determined parameters, makes computations, and provides control signal outputs required for proper engine management.

The ECM also interacts through CAN bus with the gauge module for various functions, information exchange and display of messages. Refer to *CONTROLLER AREA NETWORK (CAN)* and *LIGHTS, GAUGE AND ACCESSORIES* subsections.

The ECM also features a permanent memory that will store the information on the various ignition keys programmed to the vehicle, fault codes, customer information, and other engine information, even when the battery is removed from the vehicle.

Diagnostic Mode

The ECM features a self-diagnostic mode that is activated on system power up (ignition key ON) for certain systems and components, and when the engine is running for others. Refer to *DIAGNOSTIC SYSTEM AND FAULT CODES* subsection for more information.

Monitoring System

The MONITORING SYSTEM monitors various electrical and electronic components of the engine control systems such as the:

- ETA (Electric Throttle Actuator)
- TPS (Throttle Position Sensor)
- TAS (Throttle Accelerator Sensor)
- ECM (Engine Control Module).

The engine management system provides for redundancies in these components should a failure or partial failure occur to which it will adjust system operation to protect the vehicle and most of importantly, the driver.

Should the engine management system not respond (or not respond correctly) to a failure, then the monitoring system will react to ensure vehicle and driver safety.

The monitoring system therefore ensures the engine management system is functioning correctly.

Limp Home Mode

The ECM may automatically put the engine in LIMP HOME MODE using default parameters when certain major faults are detected. LIMP HOME MODE may also be manually engaged

under certain fault conditions. For more information, refer to *DIAGNOSTIC SYSTEM AND FAULT CODES*.

CONTROLLER AREA NETWORK (CAN)

GENERAL

SYSTEM DESCRIPTION

The CAN (Controller Area Network) protocol is an ISO standard for serial data communication.

The CAN bus links the following modules together so that they communicate to interact as required.

- ECM (Engine Control Module)
- Multifunction gauge
- DPS (Dynamic Power Steering)
- SCM (Suspension Control Module).

The components are connected together by 2 wires and they are in constant communication with each other at a rate of about every 20 milliseconds. CAN lines consist of a pair of wires (WHITE/BEIGE and WHITE/BLACK).

If a component or system malfunction is detected, a module may generate a fault code, which it transmits through the CAN bus as a signal. The fault signal may be used for various functions such as triggering the display of an error message in the multifunction gauge cluster, turning on a fault indicator light, limiting or inhibiting vehicle or engine operation, or viewed using the B.U.D.S. software for troubleshooting.

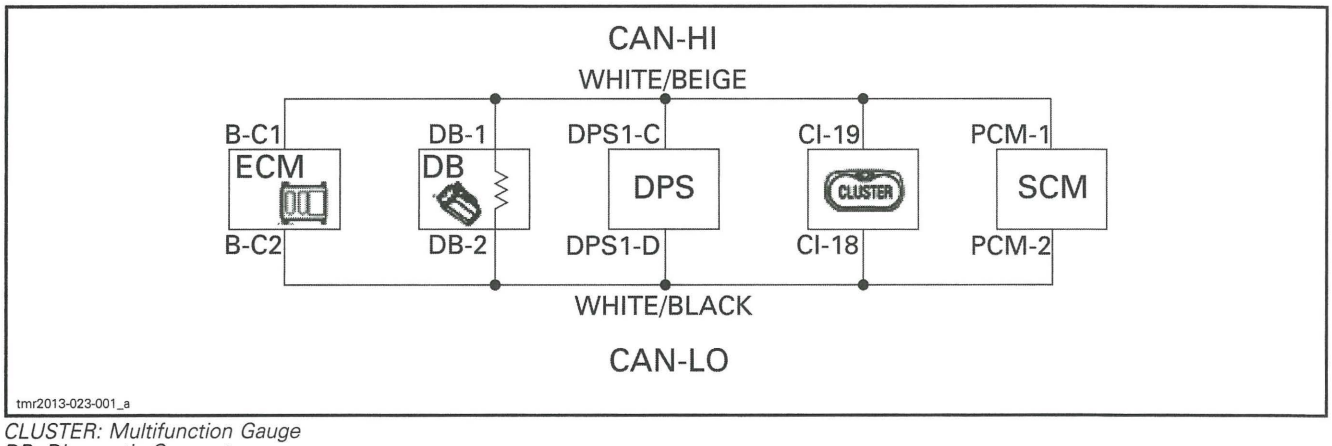

CLUSTER: Multifunction Gauge
DB: Diagnostic Connector
DPS: Dynamic Power Steering
ECM: Engine Control Module
SCM: Suspension Control Module

COMMUNICATION TOOLS AND B.U.D.S.

SERVICE TOOLS

Description	Part Number	Page
MPI-2 DIAGNOSTIC CABLE	710 000 851	223
MPI-2 INTERFACE CARD	529 036 018	223

SERVICE TOOLS – OTHER SUPPLIER

Description	Part Number	Page
MALE-FEMALE EXTENSION SERIAL CABLE	DB9	223

GENERAL

Refer to *PROCEDURES* for instructions on the communication tools.

If communication problems occur, refer to *TROUBLESHOOTING* in this subsection.

TROUBLESHOOTING

DIAGNOSTIC TIPS

IMPORTANT: Make sure all connections are made and vehicle is powered up **before starting B.U.D.S.** to allow proper communication between the vehicle and B.U.D.S. software.

MPI-2 Connection Troubleshooting

MPI-2 Status Lights

The MPI-2 includes 2 status lights that indicate the connection condition: USB and CAN. **Both lights must be GREEN** for the MPI-2 to function properly. Otherwise, refer to the following charts.

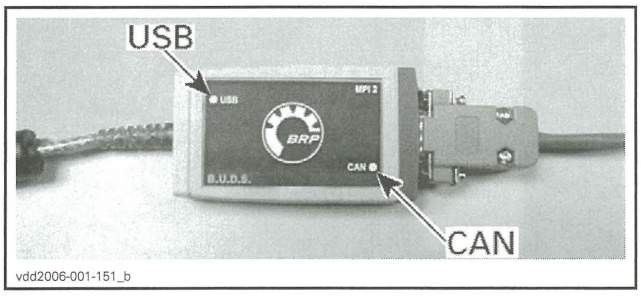

vdd2006-001-151_b

Prerequisite for USB Communication:
- PC Computer turned on.
- MPI-2 connected to PC computer.

USB LIGHT	
STATUS	WHAT TO DO
Light is OFF	– Check USB connection between MPI-2 and PC computer. – Check USB operation on PC computer (hardware or Windows drivers).
Light is GREEN	– Connections are GOOD. Communication can take place on USB side.

Prerequisite for CAN Communication:
- MPI-2 connected to diagnostic connector on vehicle.
- ECM turned on (electrical system powered up without engine started).
- Ignition key installed and turned to ON.
- B.U.D.S. started and logged on.

CAN LIGHT	
STATUS	WHAT TO DO
Light is OFF	Check connection between MPI-2 and diagnostic connector on vehicle.
Light is RED	Check CAN wires/connectors on vehicle.
Light is GREEN	Connections are GOOD. Communication can take place on CAN side.

Communication Problems when Using B.U.D.S.

Missing Module

If one or more "ECU" is (are) not communicating with the MPI, refer to *DIAGNOSTIC AND FAULT CODES* subsection.

No Vehicle Detected

If an "X" is shown in the status bar and the protocol tool is blinking between Kw2000 500K and Kw2000, it means that no "ECU" is communicating with the MPI.

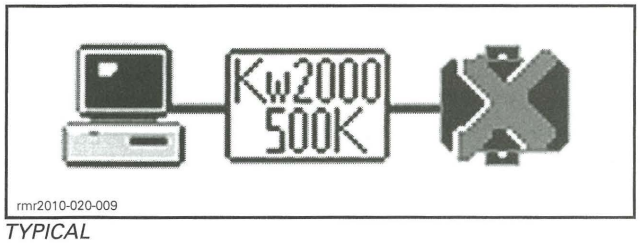

rmr2010-020-009

TYPICAL

1. Check connections between the PC computer and the vehicle.
2. Activate the vehicle electrical system without starting the engine. Refer to *POWER DISTRIBUTION SYSTEM* subsection.
3. Ensure both USB and CAN lights on the MPI-2 are GREEN. Refer to *MPI-2 CONNECTION TROUBLESHOOTING* subsection.
4. If B.U.D.S. does not automatically exit the following message box, click the **Try active detection mode** button. This will manually establish the communication with the ECUs.

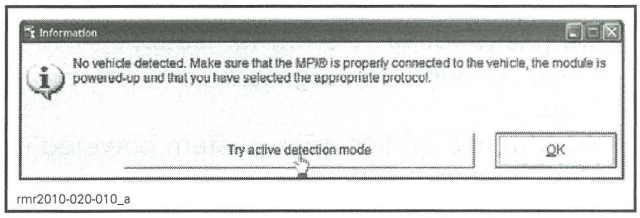

rmr2010-020-010_a

Message Box: "Some of the Information Normally Displayed..."

If the following message box is displayed in B.U.D.S.:

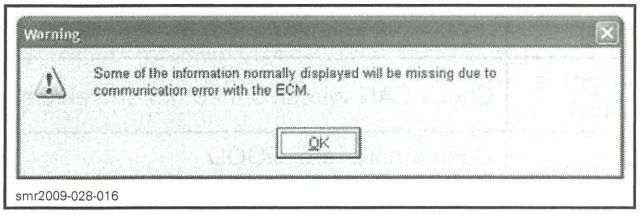

smr2009-028-016

1. Click on the **OK** button in the box.
2. Click on the **Read Data** button in B.U.D.S.

Message Box: "Engine must be Stopped..."

If the following message box is displayed in B.U.D.S.:

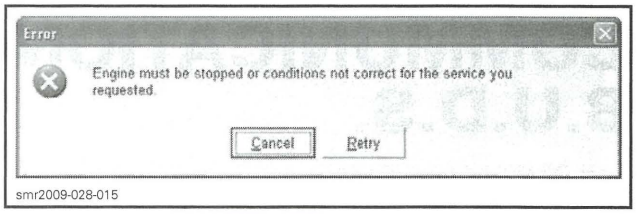

smr2009-028-015

1. Click on the **Cancel** button in B.U.D.S.
2. Continue with the procedure undertaken prior to the appearance of the message box.
3. If the message persists, ensure battery is fully charged.

PROCEDURES

MPI-2

The MPI-2 (Multi-Purpose Interface-2) in conjunction with the MPI-2 diagnostic cable is used with B.U.D.S. software to communicate with the ECM (engine control module) and other modules.

MPI-2 Power

The MPI-2 interface card uses the power from the PC computer's USB port.

Diagnostic Connector Location

The 6-pin diagnostic connector is located under the dashboard on the driver's side. It is stored in its protective cap on the lower RH side of the battery rack.

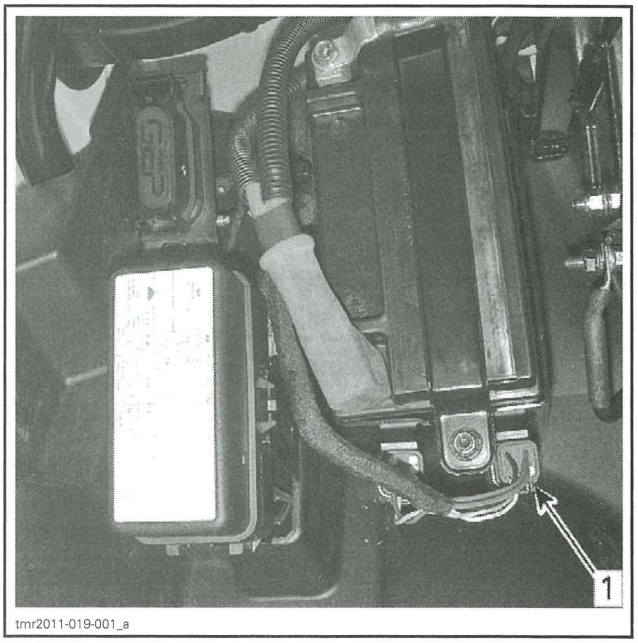

tmr2011-019-001_a

1. Diagnostic connector

NOTE: Do not mismatch the diagnostic connector with the one on the LH side of the battery rack. This connector has only 2 wires attached to it and is for manufacturer's use only.

Connecting the PC to the Vehicle

1. Locate the 6-pin diagnostic connector, refer to *DIAGNOSTIC CONNECTOR LOCATION* in this subsection.
2. Disconnect the 6-pin diagnostic connector from its holder (protective cap).
3. Connect one end of the MPI-2 DIAGNOSTIC CABLE (P/N 710 000 851) to the vehicle connector.

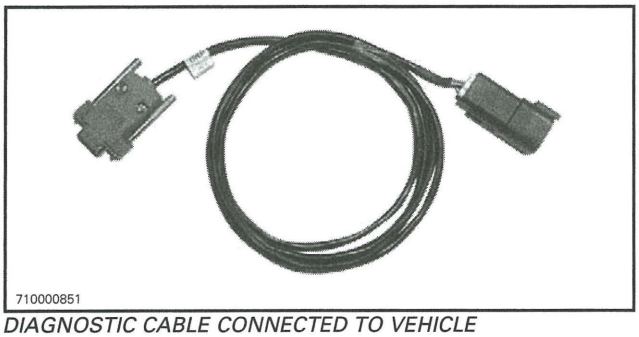

DIAGNOSTIC CABLE CONNECTED TO VEHICLE

4. Connect the other end of diagnostic cable to the MPI-2 INTERFACE CARD (P/N 529 036 018).

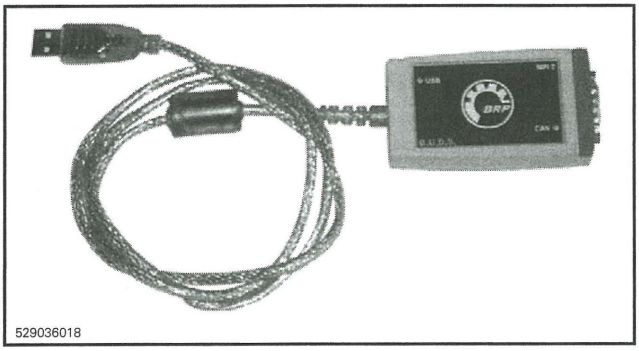

NOTE: An optional MALE-FEMALE EXTENSION SERIAL CABLE (P/N DB9) available at electronic retail outlets can be used between diagnostic cable and MPI-2 interface. Do not exceed 7.6 m (25 ft).

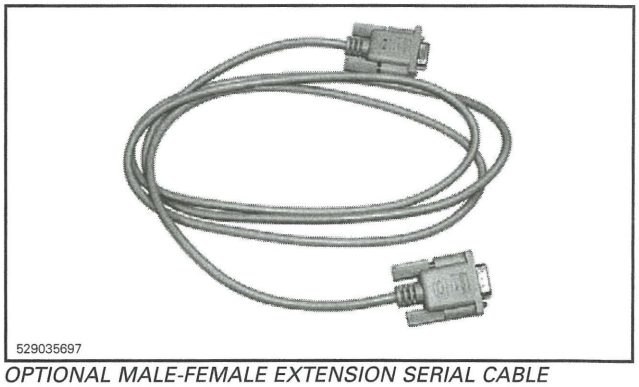

OPTIONAL MALE-FEMALE EXTENSION SERIAL CABLE

5. Connect the MPI-2 INTERFACE CARD (P/N 529 036 018) to the USB port of a PC (personal computer).

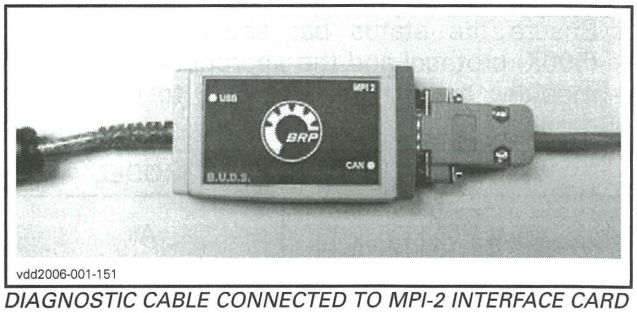

DIAGNOSTIC CABLE CONNECTED TO MPI-2 INTERFACE CARD

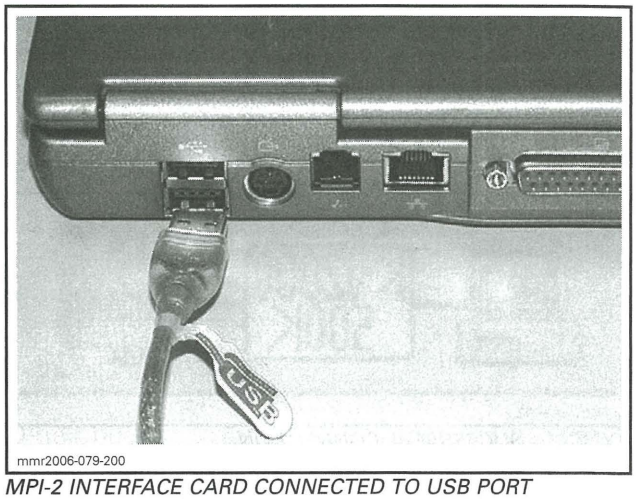

MPI-2 INTERFACE CARD CONNECTED TO USB PORT

6. Use B.U.D.S. software as described further in *B.U.D.S. SOFTWARE*.

B.U.D.S. SOFTWARE

B.U.D.S. (BRP Utility and Diagnostic Software) is designed to allow programming key(s) to the vehicle, allow electrical and electronic component monitoring, activation of certain components for diagnostic purposes, and to carry out setting changes.

For more information pertaining to the use of the B.U.D.S. software, use its **Help** menu which contains detailed information on its functions.

Always use the latest applicable B.U.D.S. version available on BOSSWeb.

How to Establish Communication Using B.U.D.S. Software

IMPORTANT: Ensure all connections have been made **before starting B.U.D.S.** to allow proper operation. Refer to *MPI-2* in this subsection.

1. Turn ignition switch to ON using any of the keys provided with the vehicle. Do not start the engine.
2. Start B.U.D.S. and logon.
3. Ensure the status bar shows the Kw2000 (500K) protocol and the appropriate number of modules to its right according to the vehicle model.

MODULE	MODEL
ECM (Engine Control Module)	All
Cluster (Multifunction Gauge)	All
DPS (Dynamic Power Steering)	DPS equipped vehicle
ACS (Air Controlled Suspension)	ACS equipped vehicle

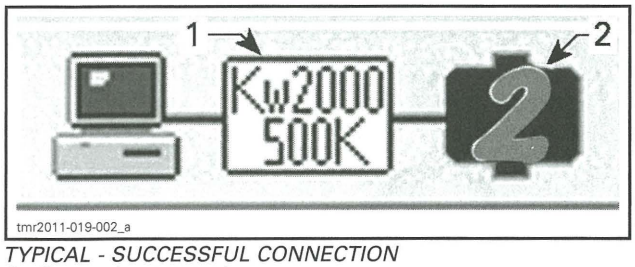

tmr2011-019-002_a

TYPICAL - SUCCESSFUL CONNECTION
1. Connection protocol
2. Number of modules read

4. Read ECUs by clicking the **Read Data** button.

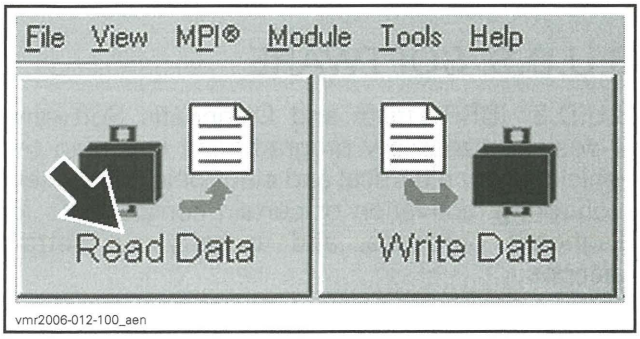

vmr2006-012-100_aen

B.U.D.S. is now ready to use.

When clicking on the **Read Data** button, B.U.D.S. will read the electronic modules through CAN bus.

Electronic Modules ("ECU") Updates

NOTICE **Failure to strictly follow a procedure to update a module may permanently damage the module.**

Whenever B.U.D.S. is started, check for an update icon in the B.U.D.S. status bar.

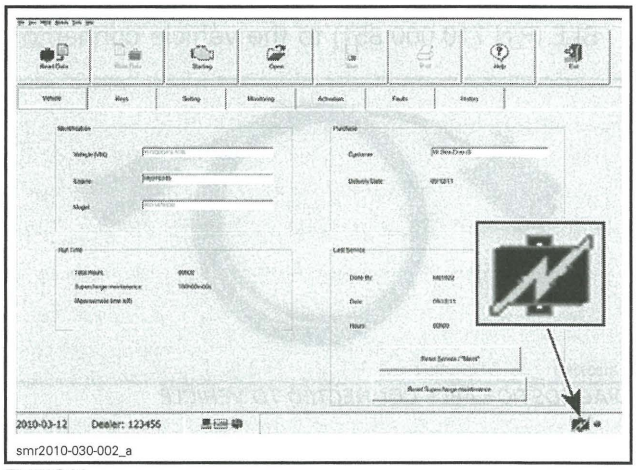

smr2010-030-002_a

TYPICAL

If the icon is visible, it indicates that a file is available in B.U.D.S. to update at least one of the electronic modules:

NOTE: If an update file is available on BOSSWeb but the B.U.D.S. software being used is not up to date, the update icon will not appear. Refer to the Service Bulletins to see if there is an update available.

Use the **Module** submenu and check all modules one at a time to see which module(s) can be updated.

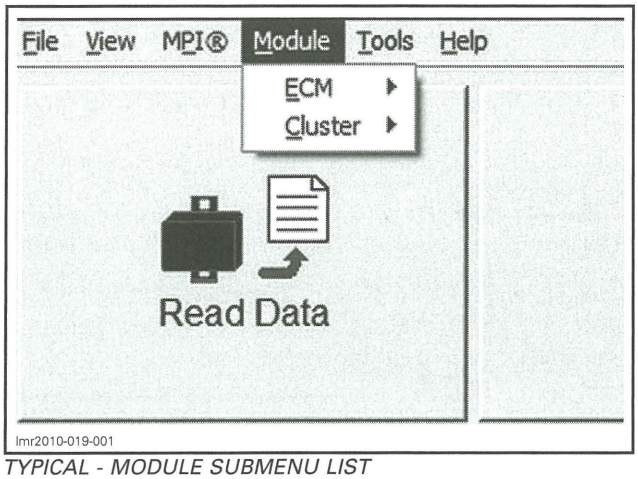

TYPICAL - MODULE SUBMENU LIST

1. If the **Update** option is **greyed out**, no update file is available for this module.
2. If the **Update** option is **black**, an update file is available for this module.

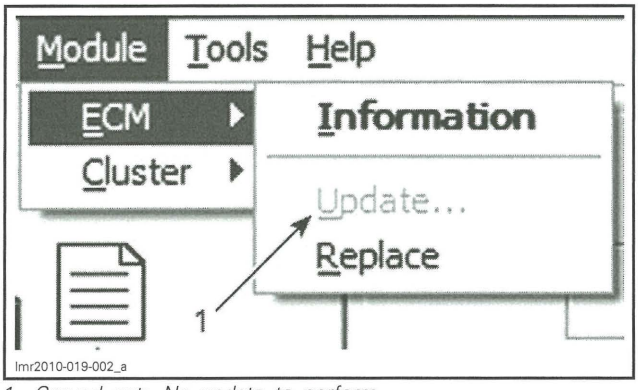

1. Greyed out: No update to perform
Black: Update file available

Before applying an update, log onto BOSSWeb and look in **Service** menu for the **Unit history** to find out if any information or publication related to the vehicle is available. If so, carefully follow the given instructions.

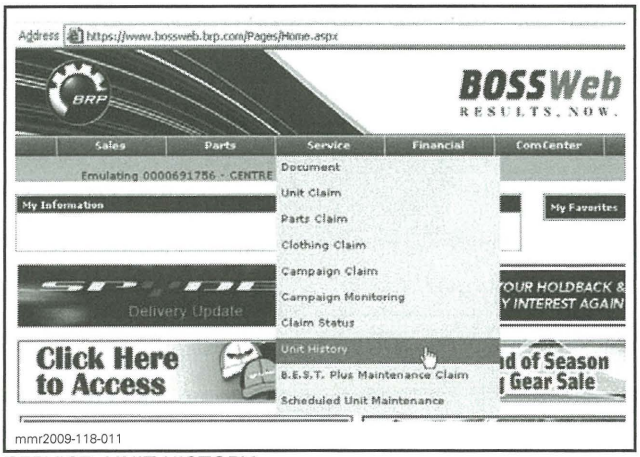

SERVICE, UNIT HISTORY

NOTE: When selecting the update menu in B.U.D.S., a dialog box will appear and the update file description may give some clue to finding the vehicle-related information in BOSSWeb.

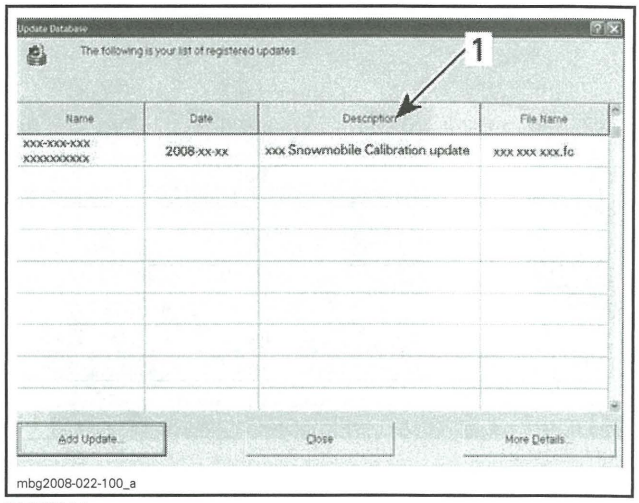

TYPICAL
1. File description

Writing Changes (Saving) to a Module

1. When making a data or setting change in a module using B.U.D.S., save the new data (or setting) in the module by clicking the **Write Data** button.

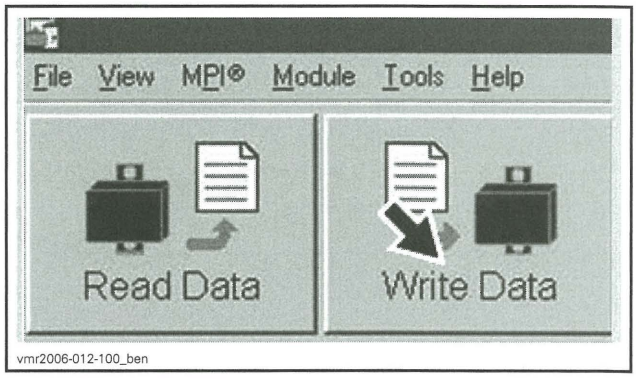

NOTE: A message box will confirm a successful operation.

2. After the write data operation, turn the ignition key to the OFF position.

Disconnect MPI connections and store the vehicle diagnostic connector in its protective cap.

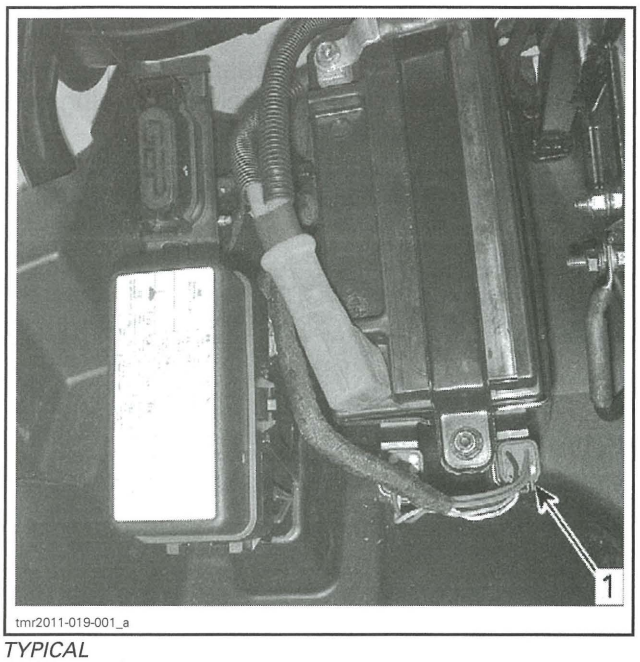

TYPICAL
1. Diagnostic connector in its storage cap

NOTICE **Failure to secure the diagnostic connector in its protective cap may result in corrosion or other damage to the terminals.**

NOTE: There is a 120 Ω resistor in the protective cap to minimize the possibility of communication error.

DIAGNOSTIC SYSTEM AND FAULT CODES

GENERAL

MONITORING SYSTEM

The EMS features a monitoring system that self-diagnoses various electrical and electronic components. This mode becomes active when the ignition key is turned ON.

NOTE: Some components require the engine to be running to be monitored (fuel injectors for example).

The monitoring system continuously validates that the components (control modules, sensors and actuators) are not faulty or defective. When a malfunction is detected, the related electronic module(s):

- Sets an active fault code.
- Adapts the proper protection strategy according to the failure.
- Sends out signals to the multifunction gauge to inform the rider of a particular condition.

If a minor fault occurs, the engine and vehicle will continue to operate without noticeable loss of performance.

If a more important fault occurs, engine RPM may be limited. The engine/vehicle will continue to operate with reduced performance.

If a major component of the EMS fails, engine RPM will be limited as well as vehicle speed.

These strategies are used to protect engine/electrical system from damage and to maintain safe operation of the vehicle. In extreme cases, the engine may also be completely shut down.

Messages in Gauge for Problematic Conditions

If an abnormal condition occurs, the gauge will display one of the following messages. It can be combined with a pilot lamp.

MESSAGE	DESCRIPTION
CHECK ENGINE	All active or previously activated faults that require attention. No engine limitation engaged.
LIMP HOME	Critical faults requiring diagnostic as soon as possible. An engine limitation is engaged and/or the engine behavior is modified.
LO BATT VOLT	Low battery voltage detected by ECM.
HIGH BATT VOLT	High battery voltage detected by ECM.
LOW OIL	Low oil level detected by the ECM.
D.E.S.S. KEY NOT RECOGNIZED	D.E.S.S. KEY is not recognized by ECM.
HI TEMP	High temperature detected by the ECM.
ECM CRC ERROR	Error message from ECM.
TPS FAULT	TPS (throttle position sensor) fault, generally followed by a Limp Home message.
BRAKE SWITCH FAULT	Brake signal fault.
ECM NOT RECOGNIZED	Message displayed when the gauge is unable to identify the ECM.
CHECK DPS	Check engine pilot light on. Indicates that the DPS (Dynamic Power Steering) does not work properly. See an authorized Can-Am dealer.

MESSAGE	DESCRIPTION
TRANSMISSION SIGNAL FAULT	Gearbox position sensor fault active. "E" is also displayed in the gear display.
PPS FAULT	When one or both sensor of the TAS (throttle accelerator sensor) is/are faulty, erratic or out of range or that the ratio between the two is incorrect, the message will be displayed and the check engine pilot lamp will be lit.
MANUAL LIMP HOME	When the TAS Limp Home (throttle accelerator sensor) is engaged, the message will be displayed.
ACS FAULT	Leak or problem detected in the ACS system.
SUSPENSION PUMP OVERHEAT	ACS compressor overheated. Do not run compressor for more than 2 minutes. Let compressor cool down.

Limp Home Mode

When a major component of the EMS is not operating properly, limp home mode will be set.

Engine RPM will be limited and/or engine behavior and control may be modified depending on the cause of the failure.

This mode allows the rider to return home, which would otherwise not be possible without this advanced system.

LIMP HOME will be displayed in the multifunction gauge and the CHECK ENGINE light symbol will be on in the gauge.

FAULT CODES

Fault Code Categories

A fault code consists of an alphanumeric designator followed by a hexadecimal number of 3 digits. The alphanumeric designator defines the category of the fault code while the hexadecimal number refers to a unique fault.

FAULT CODE CATEGORIES		
ALPHANUMERIC DESIGNATOR	MODULE/ SYSTEM	EXAMPLE OF FAULT CODE
From P0 to P3	Power train and DPS	P0116
From U0 to U3	Communication between module and sensors	U0073

RELATED MODULE AND FAULTS	
MODULE	FAULT CODE CATEGORY
ECM	P and U
DPS	P and U
Cluster	P and U

Fault Code States

Fault codes have 3 possible states:
- Active
- Occurred
- Inactive.

Click the **Fault** tab then click on the drop-down list on the LH lower corner.

Choose the fault code state you want to display.

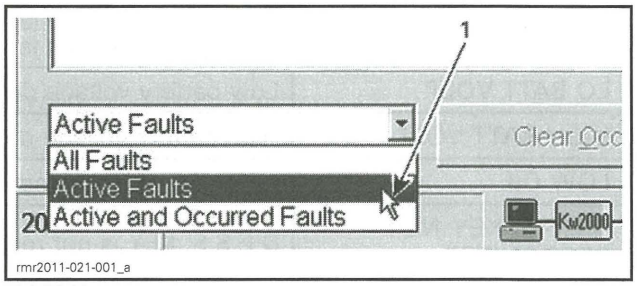

TYPICAL
1. Drop down list

Active Fault Codes

An active fault code is an indication of a fault that is **currently triggered**.

The active fault may or may not compromise normal operation of the system(s). Service action should be taken to correct the problem that caused the fault code.

Once the fault condition(s) of the active fault is no longer present, its state will change to "occurred".

Occurred Fault Codes

An occurred fault code indicates a fault that was active, but **no longer** is.

The occurred fault does not presently affect system or component operation but is retained as a history of the faults that were detected.

The fault may have been generated due to a system or component that was momentarily operating outside normal parameters. Repeated occurred faults of this type should be considered when troubleshooting a problem, and may require that maintenance action be taken.

An occurred fault may also be generated when disconnecting and reconnecting a component, replacing a burnt fuse, when the software update of an electronic module has been carried out, or may be due to a momentary high or low voltage.

Inactive Fault Codes

An inactive fault code represents a fault code that is neither active, nor occurred. It is simply part of a list of all possible faults that can be monitored by the ECM and multifunction gauge, which may become active or occurred if the monitoring system detects an applicable fault. These codes can be viewed in B.U.D.S.

How to Read Fault Codes Using B.U.D.S. Software

1. Connect vehicle to the applicable version of B.U.D.S. software, refer to *COMMUNICATION TOOLS AND B.U.D.S. SOFTWARE* subsection.
2. Click on the **Read Data** button.
3. Select the **Faults** tab.

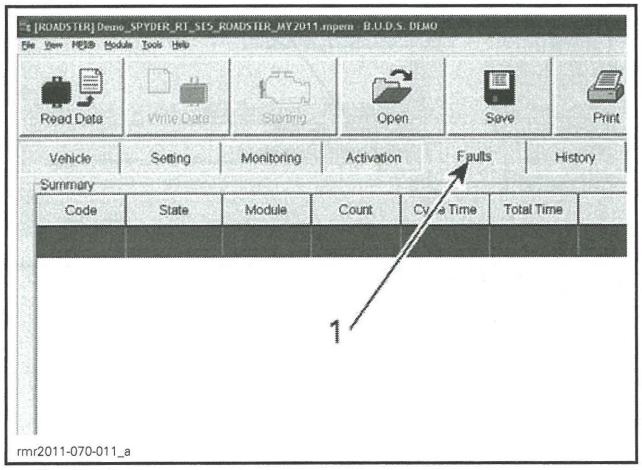

1. Fault tab

4. Click on the drop-down list on the LH lower corner.
5. Choose the fault state to display.

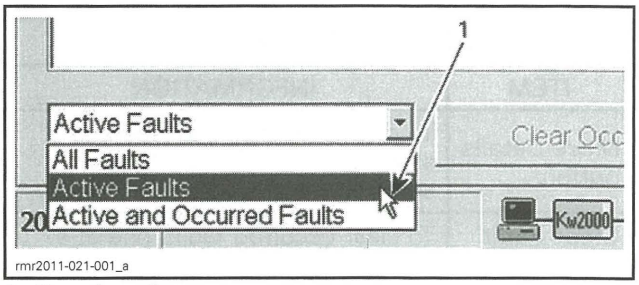

1. Drop down list

FAULT STATE	INFORMATION
All faults	Display all possible faults regardless of state
Active faults	Display only faults matching this state Empty area if there is no active fault
Active and occurred faults	Display only faults that have either state Empty area if there is neither active nor occurred fault

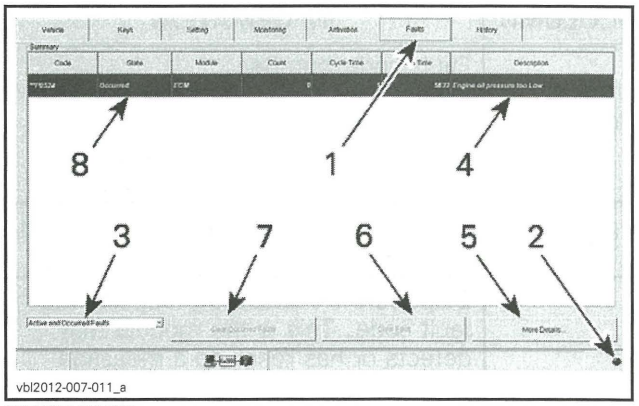

FAULT PAGE
1. **Fault** *tab*
2. *Fault indicator light*
3. *Fault code state drop box*
4. *Fault description*
5. *More Details button*
6. *Clear Fault button*
7. *Clear Occurred Faults button*
8. *Selected fault*

FAULT PAGE DESCRIPTION	
ITEM	INFORMATION
Fault tab	Click tab to display the fault page
Fault indicator light	When flashing, it indicates there is active fault(s)
Fault code state drop box	Click drop box to select the type of faults to display
Fault nomenclature	Display specific information and statistics related to the fault (see fault nomenclature table)

FAULT PAGE DESCRIPTION	
ITEM	INFORMATION
More Details button	To display possible causes and service actions related to the selected fault
Clear Fault button	To clear occurred faults one at a time
Clear Occurred Faults button	To clear all occurred faults in related ECU(s)
Selected fault	When a fault is selected, additional information pertaining to that fault will be displayed when clicking the "More details" button. To select a fault, click on the fault with the mouse or use the cursor up or down to scroll to the desired fault

FAULT NOMENCLATURE	
COLUMN	INFORMATION
Code	Fault code number. When 2 stars (**) precedes the code, detailed conditions when the fault occurred, can be displayed by clicking the "More details" button
State	Display the fault state (active, occurred, inactive)
Module	Displays the module that reports the fault code. This is the module that detects or has received a message of an anomaly and reports it. List of modules: - Cluster (multifunction gauge) - DPS (dynamic power steering) - ECM (engine control module)
Count	Number of times this fault occurred within the driving cycle. Value: From 0 to 255
Cycle time	Not to be used. Value: From 0 to 255 minutes
Total time	Not to be used. Value: From 0 to 64 255 minutes
Description	Provides a short description of the fault

When reading a fault code in B.U.D.S., pay particular attention to which module reports a fault. It is indicated in the **Module** column.

The **Description** column gives a short description of the fault.

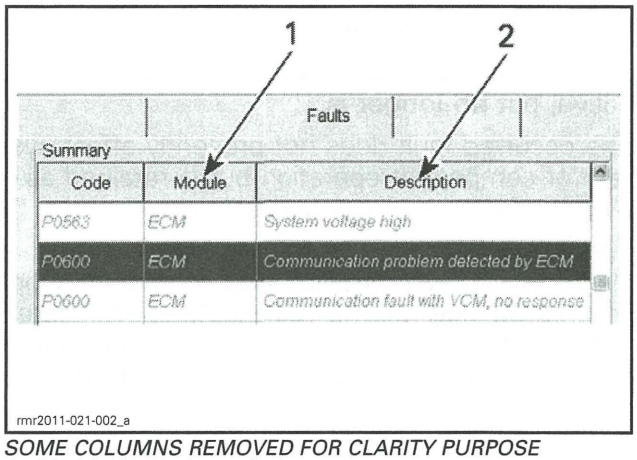

SOME COLUMNS REMOVED FOR CLARITY PURPOSE
1. *Module that reports a fault*
2. *Fault description*

Click on the **More Details** button, on the RH lower corner, to display the "Possible Causes" and the "Service Actions" to step further in the diagnosis.

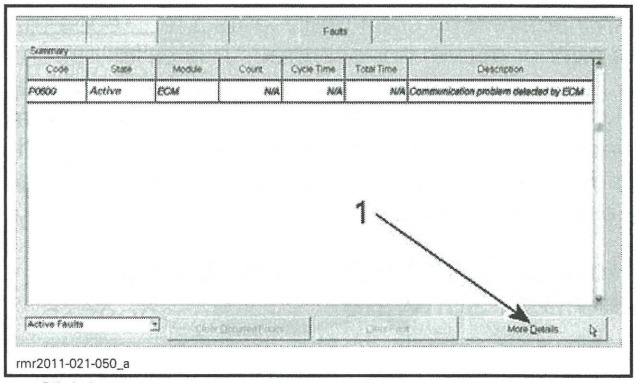

1. *Click here*

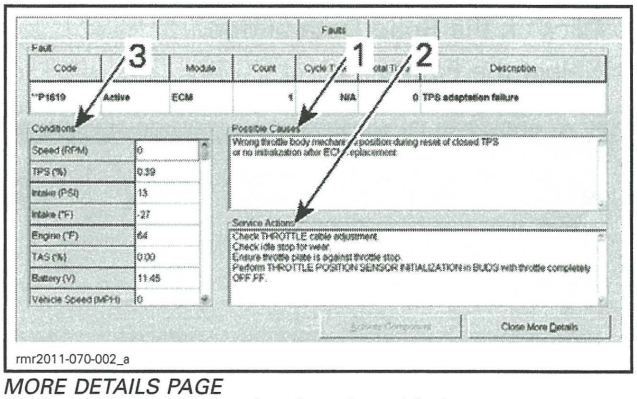

MORE DETAILS PAGE
1. *Possible causes related to the selected fault*
2. *Service actions*
3. *Operating conditions when fault occurred*

MORE DETAILS PAGE DESCRIPTION	
ITEM	INFORMATION
Possible causes	List the possible causes that triggered the fault
Service actions	List the possible actions to perform to solve the fault
Conditions when fault occurred	List the operating conditions of the engine and/or vehicle when the fault was triggered

How to Clear Fault Codes Using B.U.D.S.

1. Connect vehicle to the latest applicable B.U.D.S. software. Refer to *COMMUNICATION TOOLS AND B.U.D.S.* subsection.
2. Click on the **Read Data** button.
3. Click on the **Faults** tab.

The fault(s) (occurred state only) can be cleared by pressing the **Clear Occurred Faults**or **Clear Fault** buttons in B.U.D.S.

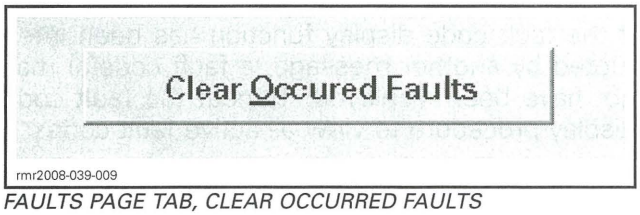

FAULTS PAGE TAB, CLEAR OCCURRED FAULTS

4. Click YES on the following message box.

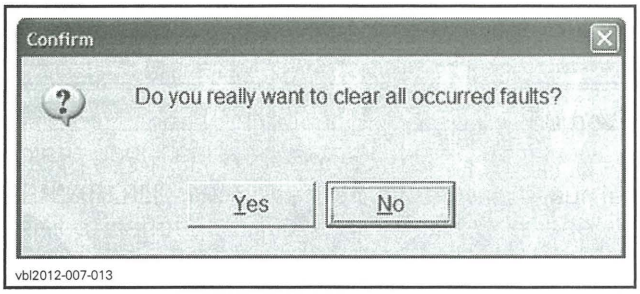

The following message will appear.

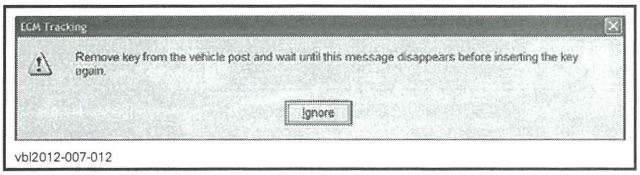

5. Turn ignition OFF and wait until the message disappears.

This will reset the appropriate counter(s) and will also record that the problem has been fixed in the related ECU memory.

NOTE: An active fault code cannot be cleared. In other words, the problem relevant to the fault code must be repaired before the fault can be cleared.

How to Read Fault Codes Using the Multifunction Gauge

NOTE: A fault code must be in an "Active" state to be displayed in the multifunction gauge. B.U.D.S. must be used to read all fault codes states.

Analog/Digital Gauge

Proceed as follows to view the active fault codes:

1. Turn ignition key to ON **with lights** position.

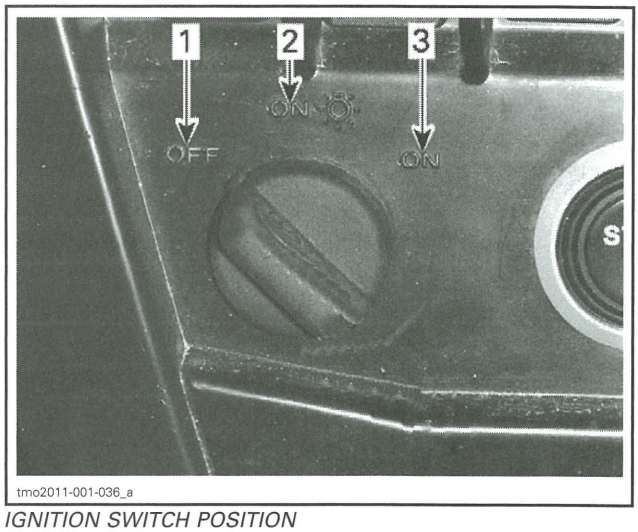

IGNITION SWITCH POSITION
1. *OFF*
2. *ON with lights (turn key to this selection)*
3. *ON*

2. Wait for the multifunction gauge to complete its self test function.
3. Press the S (set) button repeatedly until Hr (hour) is displayed in the secondary digital display.

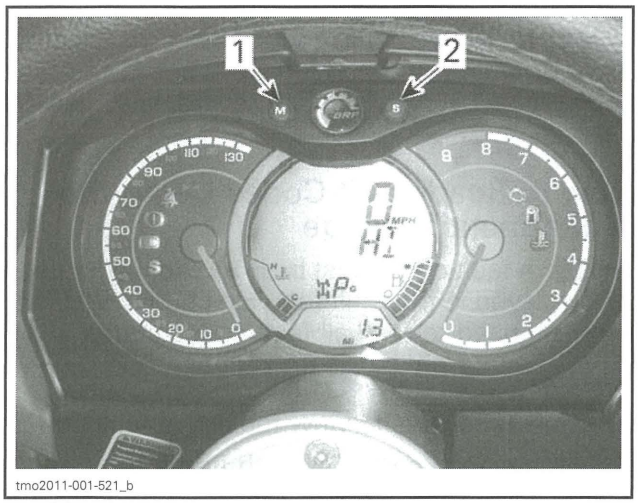

tmo2011-001-521_b

1. *M (mode) button*
2. *S (set) button (pressed repeatedly to toggle secondary display)*

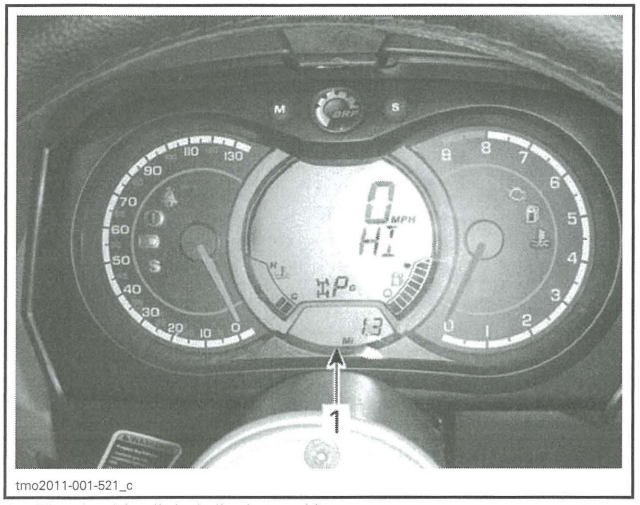

tmo2011-001-521_c

1. *Toggle this digital display to Hr*

4. Press and hold the M (mode) button while quickly toggling the HI - LO beam switch to enter the fault code display function.

NOTE: A minimum of 3 HI - LO toggles must be completed within 2 seconds.

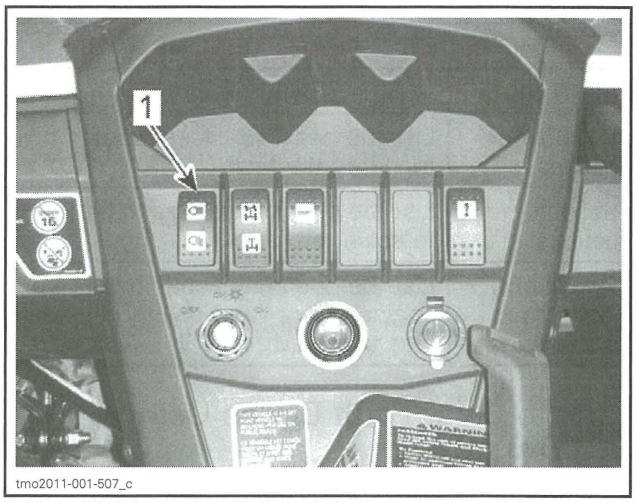

tmo2011-001-507_c

1. *Low/High beam headlight switch*

If a fault code is active, it will be displayed in the main digital display.

If no fault code is active, a scrolling NO ACTIVE FAULT CODE message will be displayed.

If there are multiple fault codes, the display will cycle through each fault code repeatedly. A maximum of 10 fault codes may be displayed.

If the fault code display function has been interrupted by another message, a fault code(s) may not have been displayed. Repeat the fault code display procedure to view all active fault codes.

To exit the fault code display function, press both the M and S buttons simultaneously.

LCD Gauge

1. Turn ignition key to ON **with lights** position.

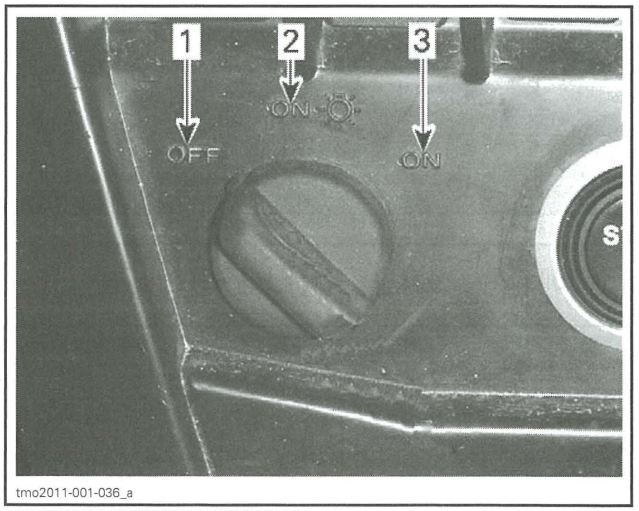

tmo2011-001-036_a

IGNITION SWITCH POSITION
1. *OFF*
2. *ON (with lights)*
3. *ON*

2. Press the selector button on the gauge repeatedly until Engine Hour (EH) is displayed on the gauge.

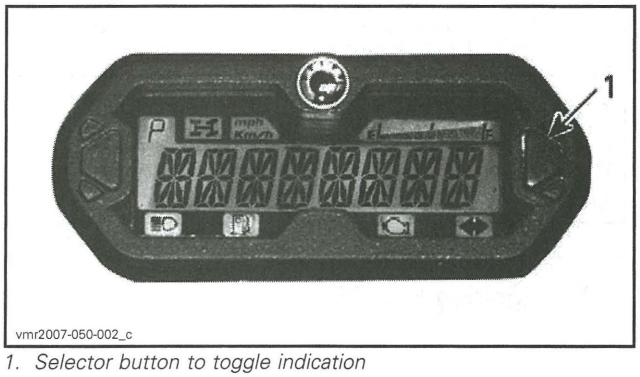

1. Selector button to toggle indication

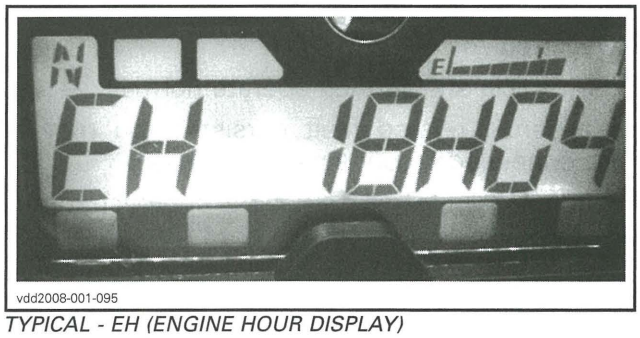

TYPICAL - EH (ENGINE HOUR DISPLAY)

3. Press and HOLD the M button while QUICKLY toggling HI - LO beam switch to enter the fault code display function.

NOTE: A minimum of 3 HI - LO toggles must be completed within 2 seconds.

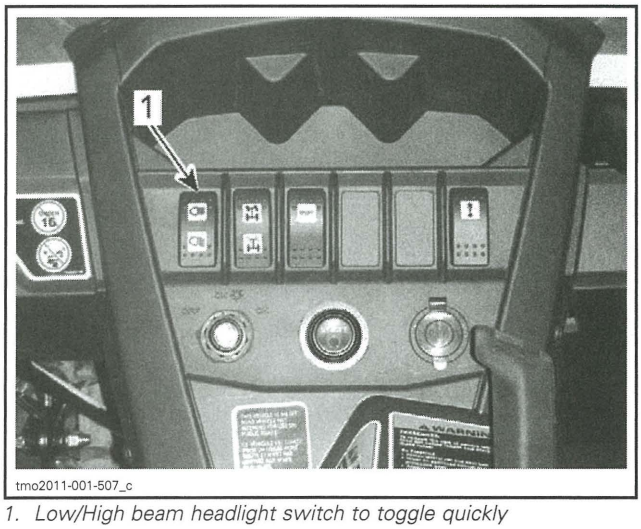

1. Low/High beam headlight switch to toggle quickly

If no P-Code is active, a "No Active P Codes" scrolling message will be displayed.

If there is an active P-Code, it will be displayed.

If there are multiple fault codes, the display will cycle through each fault code.

Once the last fault code is displayed, the gauge displays END then defaults back to normal operation.

How to Clear Fault Codes Using B.U.D.S. Software

The fault(s) (occurred state only) can be cleared by pressing the **Clear Occurred Faults** button in B.U.D.S.

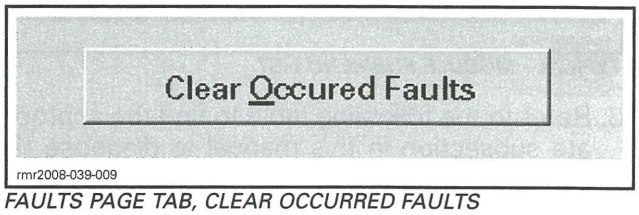

FAULTS PAGE TAB, CLEAR OCCURRED FAULTS

This will reset the appropriate counter(s) and will also record that the problem has been fixed in the related ECU memory.

NOTE: An active fault code cannot be cleared. In other words, the problem relevant to the fault code must be repaired before the fault can be cleared.

FAULT CODE DIAGNOSTIC

Missing Module

If a module is missing, several fault codes will appear.

To quickly find which module is missing, perform the following:

1. Connect vehicle to the latest applicable B.U.D.S. software. Refer to *COMMUNICATION TOOLS AND B.U.D.S.* subsection.
2. Click on the **Read Data** button.
3. Click **Module** in the menu bar.
4. Look at the list of modules.
5. If a module is not visible, then it is not communicating through the CAN bus (controller area network).

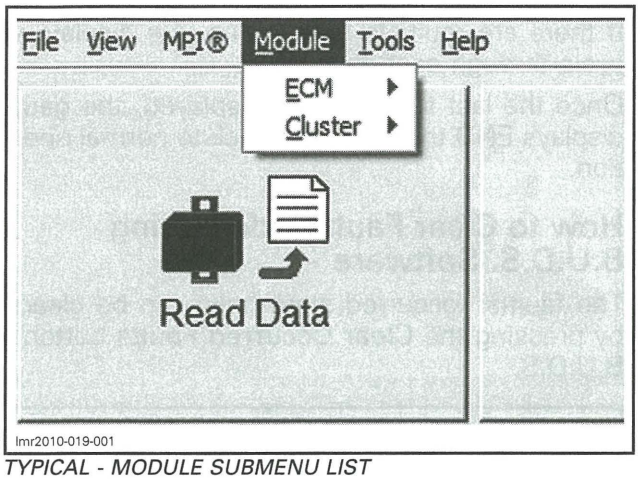

TYPICAL - MODULE SUBMENU LIST

6. Refer to the following table to find the appropriate subsection in this manual to diagnose the missing module.

MISSING MODULE	SECTION TO REFER TO
ECM	*ELECTRONIC FUEL INJECTION (EFI)*
Cluster	*LIGHTS, GAUGE AND ACCESSORIES*
ACS	*AIR CONTROLLED SUSPENSION (ACS)*
DPS	*DYNAMIC POWER STEERING (DPS)*

Diagnostic Tips

To see the last minute of operating conditions, click on the **History** tab in B.U.D.S.

NOTE: The page displays data whatever there is fault code(s) or not.

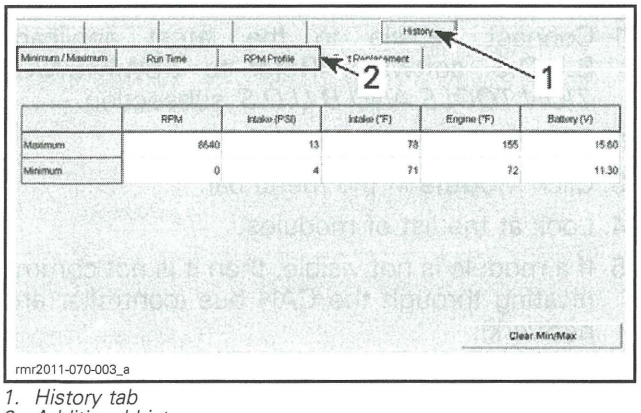

1. *History tab*
2. *Additional history pages*

HISTORY PAGE DESCRIPTION	
ITEM	INFORMATION
Minimum/ Maximum	Display the minimum and maximum values encountered. Click "Clear Min/Max" to reset the values
Run time	Display the time proportion in what mode the engine was running in
RPM profile	Display the RPM range proportion in which the engine was running in

When a minor fault occurs:
- Turn ignition key OFF.
- Wait 30 seconds.
- Turn ignition key ON.

This should change the fault state from "Active" to "Occurred".

The vehicle should then operate normally.

If a sensor-related fault persists, you may try disconnecting/reconnecting the sensor.

Read the following for a general approach to troubleshoot fault codes (active or occurred).

GENERAL GUIDELINES TO SOLVE FAULT CODES	
CONDITION	ACTION
Troubleshooting vehicle	Use B.U.D.S. to: Read fault codes. Display "Active" faults to see components currently not operating normally. Display "Occurred" faults to troubleshoot intermittent problems. Monitor system(s), sensor(s), switches and actual conditions. Activate component(s) for troubleshooting. Set components (resets etc). Know the last minute of operating conditions by using the "History" page. Know the operating conditions, if available, when a fault code occurred by using the "More details" button in the fault page.
New fault(s) appear after a vehicle maintenance or repair	Check sensor connections or mixed up connections. **Before** vehicle maintenance: Read the electronic modules with B.U.D.S. Save and print the B.U.D.S. file (keep faults option only). **After** vehicle maintenance: Read the electronic modules with B.U.D.S. Compare the fault code(s) before and after the maintenance using the printed copy and the current B.U.D.S. reading. Investigate only the newly fault codes. Clear all occurred faults in B.U.D.S.
Communication faults displayed as "Occurred" after module flashing	Normal behavior when flashing a module. Clear all occurred faults and check again.
Sensor "Active" fault	Read the fault description in B.U.D.S. Click on the "More Details" button. Look at the "Conditions" when available. Read the "Possible Causes". Apply the "Service Actions".
Low system voltage on one module. Power problem on sensor(s)	Check related fuse(s) and relay. Check related power and ground wires. Check for common power supply to several sensors/modules (refer to *POWER DISTRIBUTION AND GROUNDS).* **NOTE:** Some sensors are supplied by the battery while others are supplied by a module.
Low system voltage on several modules (several communication faults will also appear)	Check battery condition and connections. Check related fuse(s) and relay. Check voltage regulator/rectifier.
High system voltage on several modules	A battery charger has likely been used to substitute the vehicle battery. Clear all occurred faults and check again. Check voltage regulator/rectifier.
When all modules report that a module is missing	Check the module that is reported as missing. Check related fuse(s) and relay. Check related power and ground wires.
When several modules are in fault	Search for a common problem such as a faulty sensor.
CAN buss OFF	When several modules and sensors report that a module is missing. The missing module may report CAN bus off. Check related CAN wires (continuity, short to ground, short between CAN low and high). Check module pins and wiring terminals. Then, the other modules should stop reporting that module is missing.

GENERAL GUIDELINES TO SOLVE FAULT CODES	
CONDITION	ACTION
Occurred fault(s)	May have been generated due to a system or component that was momentarily operating outside normal parameters.
	May be generated when disconnecting and reconnecting a component, replacing a burnt fuse, or may be due to a momentary high or low voltage.
	Before being "Occurred", a fault has always been "Active" for a certain time, indicating that an unexpected condition or problem has been present during the driving cycle. A frequent momentarily fault or an intermittent fault may never be seen as "Active" in B.U.D.S. while there is still a pending problem. This type of malfunctions can be discovered by looking at the "Occurred" faults and then by evaluating the fault count. As long as a fault is present, it is displayed as "Active".
Fault count (0 - 255)	**Low value:** Suggests handling problems (connections, terminal contact/ shape etc.). **High value:** Suggests a frequent and unsolved problem. The problem should be investigated.
Fault conditions (more details button)	Look for abnormal, excessive values.
Hard to find problems	When the basic troubleshooting has been done and the fault code(s) persists, often the problem is related to the wiring harness, connections or electromechanical components. Short to ground, to battery or between wires. Wire splices, chafing, terminal problems (pulled out, bent, out of shape, corroded etc.). Bad contacts in switch or relay.

ECUs share information and their systems may interact with each other. Certain faults may cause more than one ECU to set a fault code or indication (pilot lamp or message) as the failure of some components may affect the operation of several systems.

SPECIFIC FAULTS

TPS Fault

A TPS fault may be considered to be a major fault as the TPS provides the most important feedback (2 signals) to the ECM on throttle position.

A TPS fault affects engine control as the throttle plate is moved by the ETA (electric throttle actuator) which, is controlled by the ECM (see *INTELLIGENT THROTTLE CONTROL (ITC)* subsection).

A TPS fault is generally followed by LIMP HOME mode and the engine is brought back to idle, or may be completely shutdown.

Low Battery Voltage Fault

If the battery voltage is low when the engine is running at idle RPM, the ECM will command an increase in RPM to a set value, thereby increasing the charging system output in order to prevent the battery from being discharged, and to allow normal system operation.

TAS Fault

If one TAS (throttle accelerator sensor) signal is missing, LIMP HOME MODE will be activated and the check engine light will come ON. Pressing and holding the OVERRIDE button will allow normal control of the accelerator pedal.

If both sensors in the TAS are at fault, a TAS FAULT message will appear in the gauge, the check engine light will come ON and the engine will run at idle. The accelerator pedal will not have any affect on engine RPM. However, the vehicle may be driven in LIMP HOME MODE by pressing the OVERRIDE button.

When limp home mode is engaged using the override button, a MANUAL LIMP HOME message will appear in the gauge. The OVERRIDE button can then be used as the accelerator, vehicle speed is controlled by pressing and/or releasing the button.

BRAKE ACTIVATION Fault Message in Gauge

If a brake signal is received continuously for 15 seconds above 5 km/h (3 MPH), a BRAKE message will be displayed in the gauge.

INTELLIGENT THROTTLE CONTROL (iTC)

GENERAL

SYSTEM DESCRIPTION

The iTC is an electronic throttle control system that includes:
- Throttle accelerator sensor (TAS)
- Electric throttle actuator (ETA)
- Throttle position sensor (TPS).

The TAS is part of the accelerator pedal module. The ETA and TPS are comprised in the throttle body.

The iTC is often referred to as a "throttle by wire" system (no throttle cable is used).

According to the accelerator pedal position and other EMS inputs, the ECM powers the ETA motor using pulse width modulation (PWM), to control the throttle plate. When the ECM detects through the TPS that the throttle plate has reached the targeted position, the ECM stops the throttle actuator.

Depending on various conditions and the type of key used, the iTC can modify the ETA response, limit the engine torque or vehicle speed.

For torque limitation, the ECM processes the TAS input differently depending on the specific mode. In other words, the driver's demand may not necessarily result in the corresponding throttle opening.

For vehicle speed limitation, the iTC controls the throttle opening to maintain a maximum set speed even if the accelerator is pedal fully depressed.

SYSTEM MAIN FEATURES

The use of the iTC allows the following features:
- Key modes
- Normal/Sport modes
- Override functions.

Key Modes

Normal Key

When a normal key is used, engine delivers approximately 70% of the accelerator pedal demand (less if normal mode is selected). Vehicle speed is limited to 70 km/h (43 MPH).

Performance Key

When a performance key is used, engine delivers 100% of the accelerator pedal demand (less if normal mode is selected). The vehicle speed is limited to 120 km/h (75 MPH).

Work Key (Option)

When a work key is used, engine delivers approximately 50% of the accelerator pedal demand (less if normal mode is selected). Vehicle speed is limited to 40 km/h (25 MPH).

Normal/Sport Modes

When sport mode is selected, the full potential of the specific ignition key is deployed except when gearbox is in reverse or low gear.

When normal mode selected, the full potential of the specific ignition key is not reached and the accelerator pedal response is smoother than in sport mode.

Reverse Override Function

In reverse gear, engine delivers less than the accelerator pedal demand and vehicle speed is limited to 20 km/h (12 MPH). Also, the accelerator pedal response is smoother than in high gear.

If the override button is depressed, vehicle speed and engine acceleration are increased. Even with the override is activated, the ECM will not allow the engine to deliver 100% of the accelerator pedal demand.

SYSTEM OTHER FEATURES

Driver's Seat Belt Monitoring

If driver's seat belt not fastened, speed is limited to approximately 15 km/h (9 MPH).

Brake Monitoring

If the ECM receives a brake switch signal while gearbox is in gear and the vehicle moving, the ETA will decrease throttle plate opening and engine speed will drop to idle.

NOTE: A defective brake light switch that would stay in a closed position would force the engine to run at idle.

Low Range Operation

When gearbox is in low range, engine delivers less than the accelerator pedal demand and the accelerator pedal response is smoother than in high gear.

Half Shaft Saver

In a case where the drive wheels would momentarily leave the ground while the driver holds the throttle, this mode protects the drive system.

The system will enter the half shaft saver mode if the ECM detects an excessive wheel acceleration rate. In such a case, the iTC will reduce the engine torque. When the wheels slow down, the system returns to normal mode.

Engine Temperature Monitoring

If coolant gets too hot, engine will deliver less than the accelerator pedal demand. The limitation is proportional to the overheat degree.

Battery Voltage Monitoring

If the battery voltage gets low, the engine idle RPM will be increased at approximately 1500 RPM.

Drowned Mode

In case of a fuel flood, the engine can be cranked without fuel injection.

To enter the drowned mode, depress and hold accelerator pedal (at least 20% of the travel) while cranking engine.

Limp Home Mode

When certain faults are occurring, the ECM will enter the limp home mode. In this mode, the engine will deliver less than the accelerator pedal demand.

PROCEDURES

SPORT/NORMAL SWITCH

Sport/Normal Switch Wire Information

FUNCTION	PIN	COLOR
Signal (to ECM B pin D4)	1	BROWN/GREEN
Ground through ECM (to ECM B pin A1)	2	ORANGE/VIOLET

SEAT BELT SWITCH

Seat Belt Switch Wire Information

FUNCTION	PIN	COLOR
Signal (to ECM B pin E3)	1	YELLOW/GREY
Ground through ECM (to ECM B pin A1)	2	ORANGE/VIOLET

OVERRIDE SWITCH

Override Switch Wire Information

FUNCTION	PIN	COLOR
Normal position signal (to ECM B pin D3)	1	VIOLET/YELLOW
Ground through ECM (to ECM B pin B1)	2	VIOLET/GREY
Override position signal (to ECM B pin F3)	3	VIOLET/ORANGE

THROTTLE ACCELERATOR SENSOR (TAS)

TAS Description

The throttle accelerator sensor (TAS) is a double hall effect sensor that sends a signal to the ECM which is proportional to the accelerator pedal. The redundancy is used for security purposes.

The voltage output of the hall effect sensors are different.

TAS Removal and Installation

The TAS is part of the accelerator pedal.

1. Note the wire routing and tie-wrap position.
2. Disconnect electrical connector.
3. Remove both accelerator pedal retaining nuts by outside the passenger compartment. Reach nuts by the RH side of the vehicle.

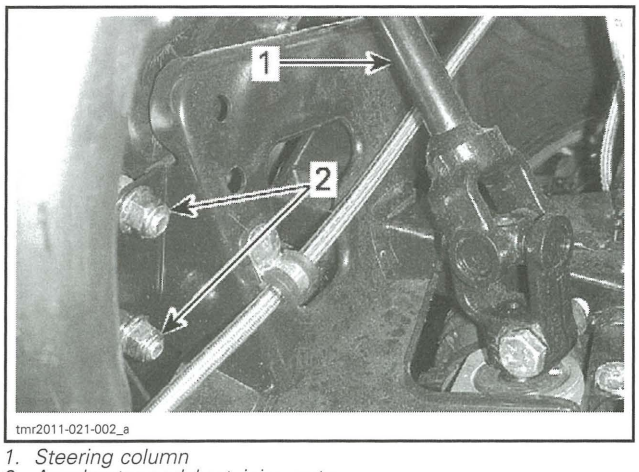

1. Steering column
2. Accelerator pedal retaining nuts

To install, reverse the removal procedure, however pay attention to the following:

Route and attach wires correctly.

Tighten nuts to the specified torque.

ACCELERATOR PEDAL RETAINING NUTS TIGHTENING TORQUE
13 N•m ± 1 N•m (115 lbf•**in** ± 9 lbf•**in**)

Carry out the *ECM FIRST INITIALIZATION*, refer to *ELECTRONIC FUEL INJECTION (EFI)* subsection.

TAS Wire Information

FUNCTION	PIN	COLOR
Signal	A	BLUE/GREEN
Ground through ECM	B	BLUE/RED
Voltage input (5 volt)	C	BLUE/ORANGE
Voltage input (5 volt)	D	BLUE/BLACK
Signal	E	BLUE/PINK
Ground through ECM	F	BLUE/VIOLET

TAS Failure

If one TAS signal fails, the vehicle will enter the limp home mode. In this case, depressing the override button will temporarily restore accelerator pedal operation (while button is depressed).

If both TAS signals fail, the engine speed will drop to idle. Depressing the override button will force the ECM to open the ETA to an angle that allows the vehicle to move.

TAS Test with B.U.D.S.

The TAS signal can be monitored in B.U.D.S.

Connect to the latest applicable B.U.D.S. software. Refer to *COMMUNICATION TOOLS AND B.U.D.S.* section.

Select the **Monitoring** and **ECM** tabs.

Look at the **TAS (%)** window as you depress the accelerator pedal.

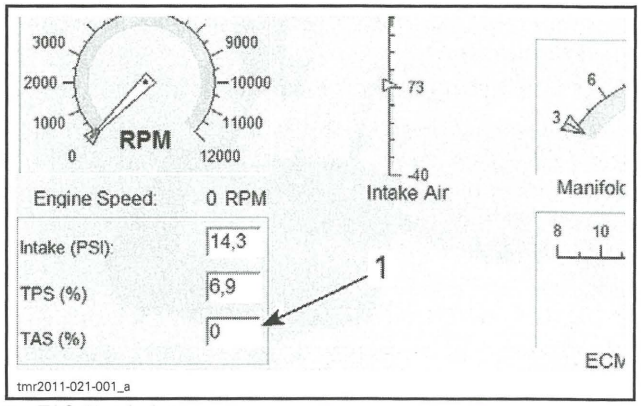

1. TAS % window

The TAS signal should vary from near 0% to near 100% depending on the pedal position, which confirms the TAS signal reaches the ECM.

ELECTRONIC FUEL INJECTION (EFI)

SERVICE TOOLS

Description	Part Number	Page
DIGITAL INDUCTION TACHOMETER	529 014 500	244
ECM ADAPTER TOOL	529 036 166	247, 259, 261–264
FLUKE 115 MULTIMETER	529 035 868	247, 253, 259, 262–263
OETIKER PLIERS	295 000 070	256

SERVICE PRODUCTS

Description	Part Number	Page
LOCTITE 243 (BLUE)	293 800 060	264
XPS SYNTHETIC GREASE	293 550 010	261

GENERAL

⚠ WARNING

Fuel is flammable and explosive under certain conditions. Ensure work area is well ventilated. Do not smoke or allow open flames or sparks in the vicinity.

⚠ WARNING

Fuel lines remain under pressure at all times. Always proceed with care and use appropriate safety equipment when working on pressurized fuel system. Wear safety glasses. Wipe off any fuel spillage. Do not allow fuel to spill on hot engine parts and/or on electrical connectors.

⚠ WARNING

Replace any damaged, leaking or deteriorated fuel lines or connections. Always, pressurize the fuel system if any fuel related component was disconnected or removed. Proceed with care when removing/installing high pressure test equipment.

SYSTEM DESCRIPTION

The electronic fuel injection system (EFI) is comprised of various sensors used for detecting ongoing operating conditions of the engine and vehicle, and includes all the components that perform the required adjustments to the engine.

Electrical System

ECM (Electronic Control Module)

From input signals, the ECM acknowledges driver demands and converts them to an engine torque requirement through calculation of several variables. Then, the ECM controls the iTC, the injection system and the ignition system to meet the torque requirement.

The ECM manages the engine torque requirements and controls engine operation to ensure it is delivering optimum performance and fuel economy. The ECM also controls idle RPM and limits maximum engine speed through the iTC system.

EFI Sensors

The ECM reads the inputs from the sensors which it compares to predetermined parameters stored in the ECM, makes computations, and activates the outputs accordingly (injectors, ignition coils etc.).

Signals from sensors are used by the ECM to determine the injection and ignition parameters (referenced to fuel maps) as required to maintain the optimum air-fuel ratio.

Air Intake System

Air Filter

Air, drawn into the air filter housing, first passes through an inlet duct.

After it passes through the air filter, an air duct (intake adapter) is used to channel the air to the throttle body.

Throttle Body

The throttle body is mounted on the front end of the plenum, aft of the air filter housing.

Air for combustion, drawn in by the engine, flows through the air intake system, then through the throttle body where it is regulated by a throttle plate.

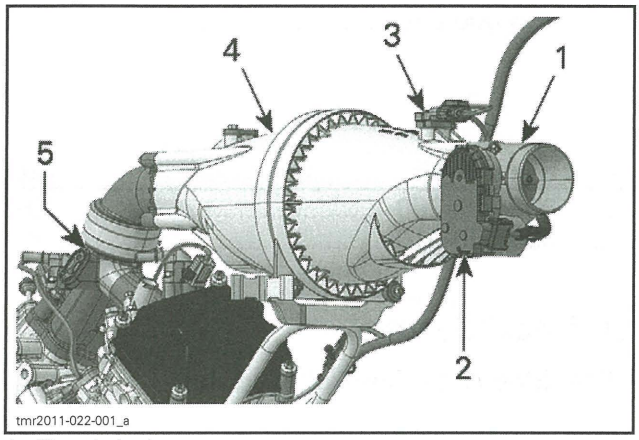

1. *Throttle body*
2. *ETA and TPS*
3. *MAPTS (Manifold Air Pressure Temperature Sensor)*
4. *Plenum*
5. *Air intake manifold*

Fitted on the throttle body, an electronic throttle actuator (ETA) allows the ECM to electronically control the throttle plate opening which regulates the amount of air that enters the engine, and therefore engine torque.

There is no idle air control valve (IACV).

The TPS is also incorporated in the throttle body. It provides a signal to the ECM of the actual throttle plate position.

Plenum

After the air flows through the throttle body, it enters the plenum. The plenum provides a resonance effect which leads to an improved cylinder charge.

Fuel System

Fuel Rail

Two fuel rails, one for each injector, are mounted on the intake manifold. The fuel rails, which are used to secure the injectors to the manifold, also provide to the injectors the fuel pressure that they receive from the fuel pump.

The fuel pressure applied to the fuel rails is regulated by the fuel pressure regulator located in the fuel pump module.

Fuel Injectors

The fuel injectors are used to inject fuel into the intake ports of the cylinder head. One injector is used per cylinder.

Fuel Pump

An electric fuel pump with an integrated pressure regulator and fuel system filters is used. For more details on the fuel pump unit, refer to *FUEL TANK AND FUEL PUMP* subsection.

ADJUSTMENT

IDLE SPEED

Idle speed is not adjustable. The ECM controls the idle speed of the engine primarily through control of the throttle plate position.

The vehicle multifunction gauge can provide an accurate digital readout of the engine's idle speed.

If desired, the engine RPM can be verified using a DIGITAL INDUCTION TACHOMETER (P/N 529 014 500).

Install the tachometer wire on a spark plug cable.

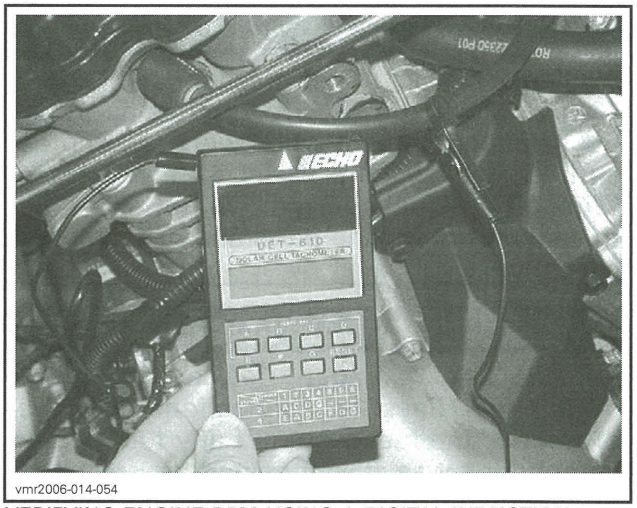

VERIFYING ENGINE RPM USING A DIGITAL INDUCTION TACHOMETER

The engine RPM may also be verified using the applicable B.U.D.S. software version, refer to *COMMUNICATION TOOLS AND B.U.D.S.* subsection.

In B.U.D.S., select the following:
- **Read Data** button
- **Monitoring** tab
- **ECM** tab.

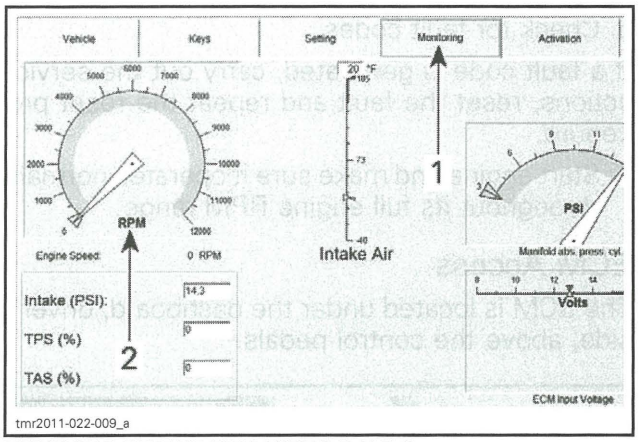

VERIFYING ENGINE RPM USING B.U.D.S.
1. **Monitoring** *tab*
2. *Engine RPM indication*

NOTE: The multifunction gauge and B.U.D.S. use the same signal to provide the engine RPM indication.

TROUBLESHOOTING

DIAGNOSTIC TIPS

Engine problems are not necessarily related to the fuel injection system.

It is important to ensure that the engine and propulsion system, fuel delivery and electrical systems are functioning normally.

For diagnostics purposes, use B.U.D.S. software. See *COMMUNICATION TOOLS AND B.U.D.S.* subsection.

After a problem has been solved, be sure to clear the fault(s) in the ECM using the B.U.D.S. software.

⚠ WARNING

Electrical actuators and electronic modules may be powered up as soon as the ignition switch is set to ON. Always disconnect the battery prior to disconnecting any electrical or electronic parts.

Never use a battery charger to temporarily substitute the battery as it may cause the ECM to function erratically, or not at all.

Check related-circuit fuse solidity and condition with an ohmmeter. A visual inspection could lead to a false diagnosis.

Electrical Related Problems

It is important to check the following in the electrical system:
- Battery voltage
- Fuses
- Ground connections
- Wiring and connectors.

Ensure that all electronic components are genuine OEM. Any modification to the wiring harness may lead to poor system operation or generate fault codes.

Electrical Connections

Pay particular attention to ensure that terminals and pins are not out of their connectors, corroded, or out of shape.

When probing terminals, pay attention not to deform the terminals as this could cause a loose or intermittent connection that would be difficult to troubleshoot.

PROCEDURES

ENGINE CONTROL MODULE (ECM)

NOTE: As a first troubleshooting step, always check for applicable fault codes using B.U.D.S. software.

Quick Test to Validate ECM Operation

Turn ignition key to ON.

NOTE: Setting the ignition switch to ON wakes up the ECM, which then turns on the following.

QUICK INDICATION THAT ECM IS FUNCTIONING (ASSUMING THE OBSERVED COMPONENT IS IN GOOD WORKING ORDER)
Multifunction gauge turns ON.
Fuel pump turns on for approx. 5 seconds.
Rear lights turn on.
Headlamps turn on (ignition key on with lights position).

ECM First Initialization

This procedure performs a reset of the following values in the ECM:
- TAS (Throttle Accelerator Sensor)
- TPS (Throttle Position sensor)
- GBPS (Gearbox Position Sensor).

This reset **must** be carried out whenever the ECM has been replaced.

This reset **may** be carried out whenever any of the following components have been replaced instead of their respective reset procedures:

- Throttle body (for TPS)
- GBPS (Gearbox Position Sensor).

1. Connect vehicle to the applicable B.U.D.S. version, refer to *COMMUNICATION TOOLS AND B.U.D.S.* subsection.
2. In B.U.D.S., select the following:
   - **Read Data** button
   - **Setting** tab
   - **ECM** tab.

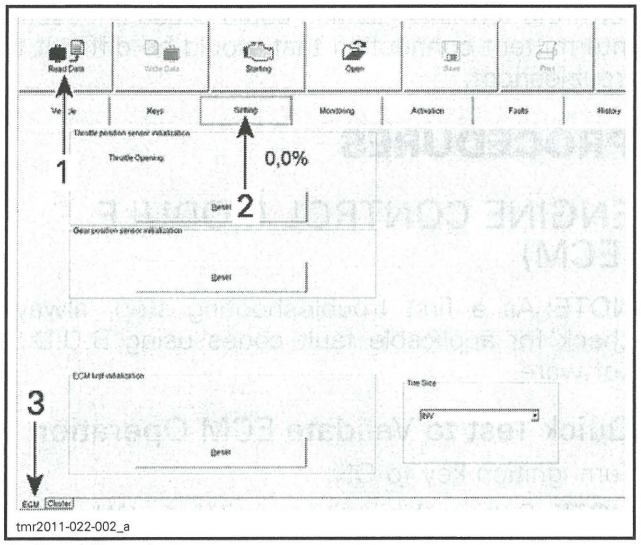

*1. **Read Data** button*
*2. **Setting** tab*
*3. **ECM** tab*

3. In the **ECM first initialization** field, click on the **Reset** button.

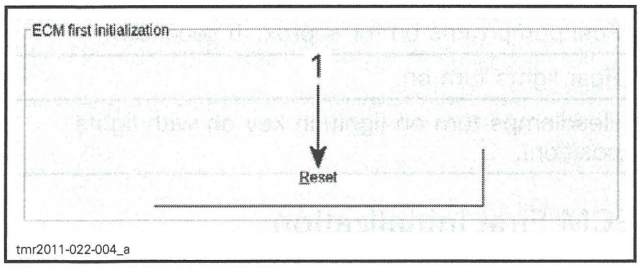

ECM FIRST INITIALIZATION
*1. **Reset** button*

4. Follow the instructions in the message boxes that appear in B.U.D.S.

If the operation is successful, a message will be displayed stating that the reset was successful.

If an error occurred or a component is out of range, a message may be displayed. Follow the instructions in the message and repeat the procedure.

5. Check for fault codes.

If a fault code is generated, carry out the service actions, reset the fault and repeat the reset procedure.

6. Start engine and make sure it operates normally throughout its full engine RPM range.

ECM Access

The ECM is located under the dashboard, driver's side, above the control pedals.

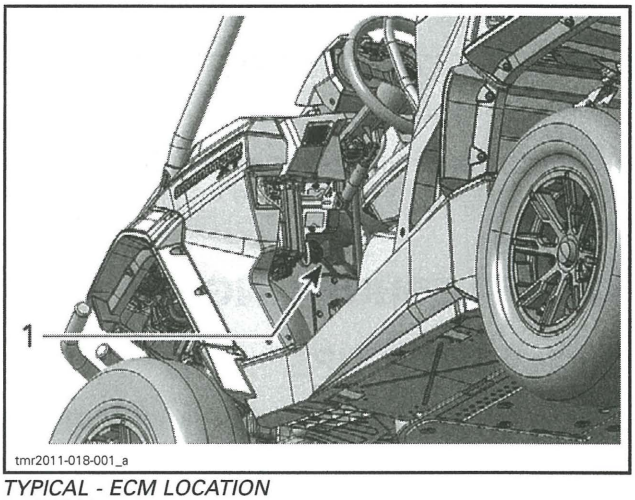

TYPICAL - ECM LOCATION
1. ECM location

ECM Connector Identification

There are 2 connectors connected to the ECM:

- Engine harness connected to ECM-A
- Vehicle system control harness connected to ECM-B.

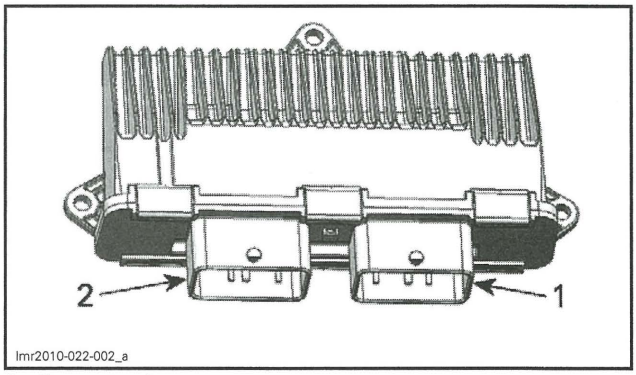

1. Connector A
2. Connector B

The ECM connectors have 48 pins.

NOTE: For connector information, cleaning and probing, refer to *CONNECTOR INFORMATION* subsection.

ECM Adapter Tool

To probe ECM connector terminals, use the ECM ADAPTER TOOL (P/N 529 036 166).

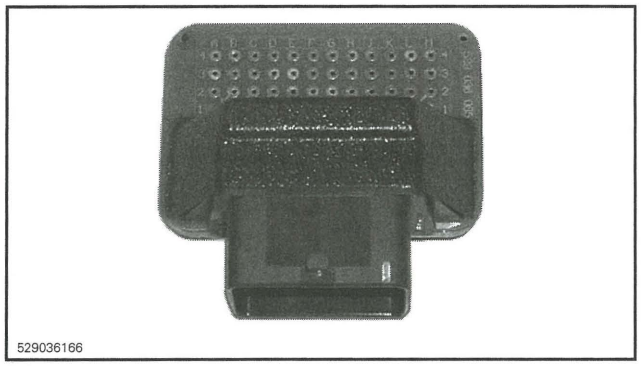

NOTE: This tool will prevent deforming or enlarging terminals which would lead to bad ECM terminal contact creating intermittent or permanent problems.

ECM Power Supply Test

1. Disconnect connector "B" from the ECM.
2. Install ECM connector "B" on the ECM ADAPTER TOOL (P/N 529 036 166).
3. Install a jumper wire between B-H2 and B-M2 on the ECM adapter tool.
4. Turn the ignition switch to ON.
5. Use the FLUKE 115 MULTIMETER (P/N 529 035 868) and select Vdc.
6. Check for voltage as follows.

ECM ADAPTER	BATTERY	VOLTAGE
B-M4	Negative post	Battery voltage

If voltage is not measured, check the following:
- Main relay
- Wiring and connections, refer to the *WIRING DIAGRAM*.

Continuity Test of ECM Ground Circuits

1. Disconnect connector "B" from ECM.
2. Install the ECM ADAPTER TOOL (P/N 529 036 166) on ECM-B connector.
3. Use the FLUKE 115 MULTIMETER (P/N 529 035 868) and select Ω.
4. Probe adapter terminals as per following table.

ECM ADAPTER	BATTERY POST	RESISTANCE
Pins B-L1, B-M2 and B-M3	Ground	Close to 0 Ω (continuity)

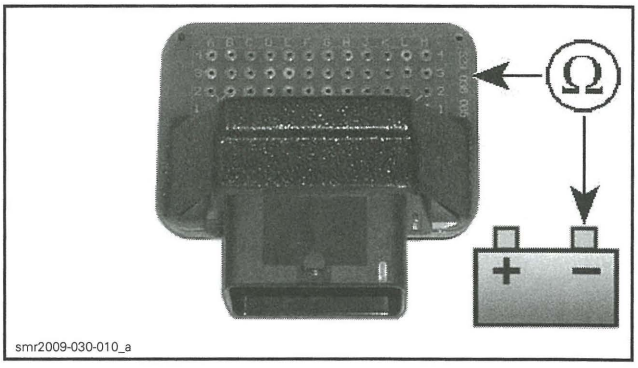

If any measurement is out of specification, check the following:
- Engine ground
- Battery ground
- Frame ground.

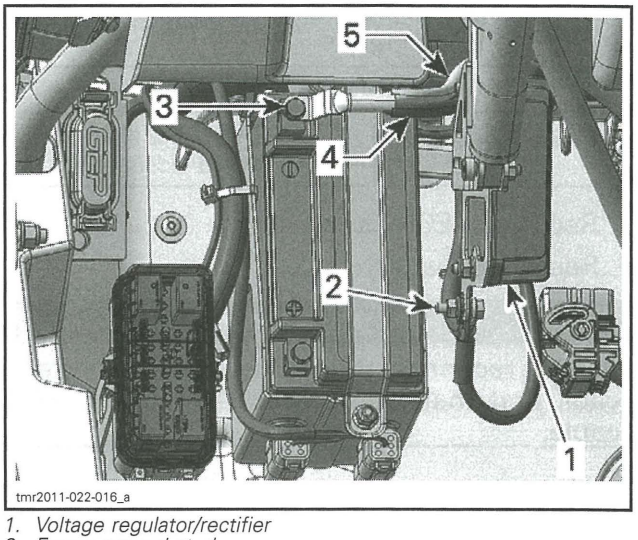

1. Voltage regulator/rectifier
2. Frame ground stud
3. Negative (-) battery post
4. Battery ground wire
5. Engine ground wire

ECM Removal

NOTE: If a new ECM is to be installed, first read the procedures in *ECM REPLACEMENT* in this subsection.

1. Disconnect battery cables.

NOTICE Always disconnect the BLACK negative (–) battery cable first, then disconnect RED positive (+) cable.

2. Disconnect both ECM connectors from ECM.

3. Unscrew all retaining screws and remove the ECM from its support.

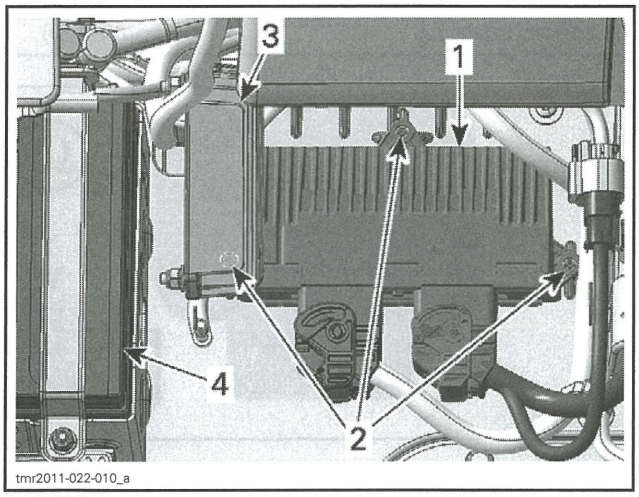

1. ECM
2. Retaining screws
3. Voltage regulator/rectifier
4. Battery

ECM Installation

Reverse removal procedure however, pay attention to the following.

ECM INSTALLATION	
TORQUE	2 N•m ± 0.2 N•m (18 lbf•**in** ± 2 lbf•**in**)

1. Reconnect ECM connectors.
2. Reconnect battery cables.

⚠ WARNING

Always reconnect the RED positive (+) battery cable first, then reconnect BLACK negative (–) cable.

3. If a new ECM is installed, refer to *ECM REPLACEMENT* in this subsection.

ECM Replacement

Prior to replacing an ECM, ensure that all the recommendations in the general introduction of this section have been followed.

NOTE: Proceed with an *ECM FIRST INITIALIZATION* as it may resolve the problem.

If the ECM is replaced, data must be manually entered into the new ECM.

ECM Manual Data Entry

There are 2 possible methods to collect the required information. The 1st being the easiest:

1. Use B.U.D.S. to obtain the data from a saved .mpem file on your PC computer.
2. Collect the information from the vehicle and BOSSWeb.

1st Collecting Method: Obtaining the Data from a Saved .mpem File

1. Use the B.U.D.S.

NOTE: It is not necessary to perform any connection. The PC computer can be used alone.

2. In B.U.D.S., click on the **Open** button.

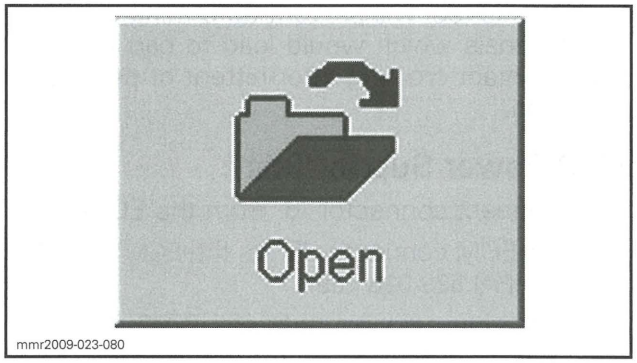

3. Click once on the **Folder Up** button in the Open box.

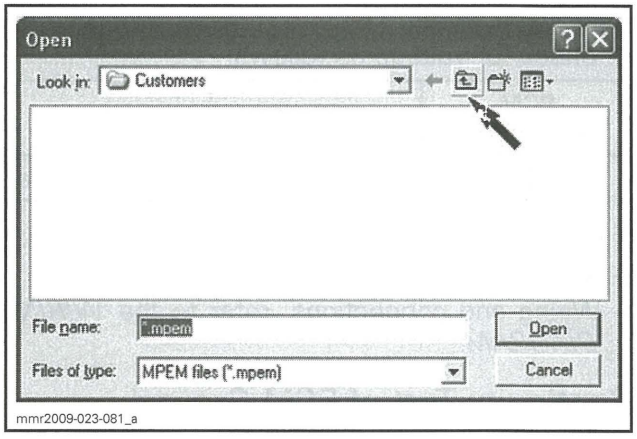

Double click on the **AutoSave** folder.

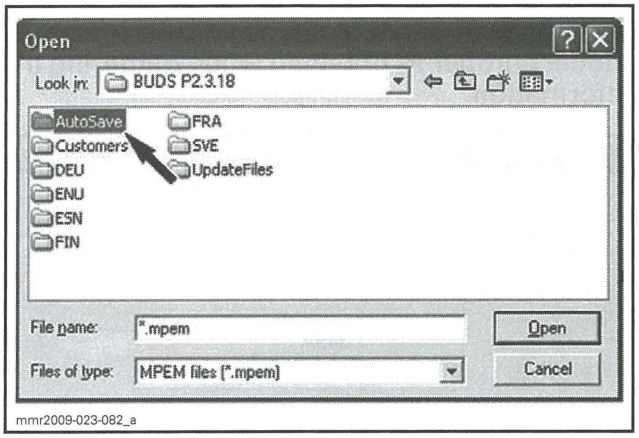

NOTE: You may have to go to another AutoSave folder from a previous version of B.U.D.S.

4. Choose the latest file saved for this specific vehicle.

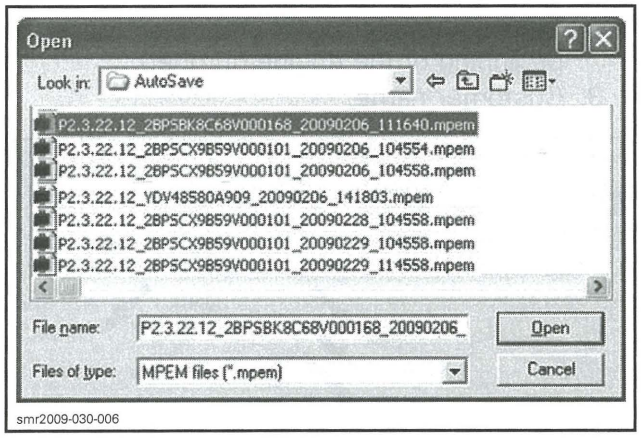

IMPORTANT: Be sure to use the file that specifically matches the vehicle you are servicing.

NOTE: The file name structure is as follows:
B.U.D.S. version_VIN_date read (yyyymmdd)_hour read (hhmmss).mpem
Example: **P2.3.22.12_2BPSBK8C68V000168_20090206_111640.mpem** Therefore: B.U.D.S. version: P2.3.22.12 VIN: 2BPSBK8C68V000168 Date: 2009 02 06 Hour: 11h 16m 40s

5. Select the **Vehicle** tab and record (write down) the following information.
   1. Vehicle serial number
   2. Engine serial number (without the leading "M")
   3. Vehicle model number
   4. Customer name.

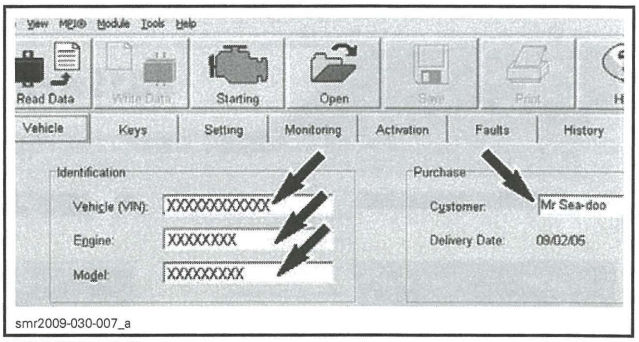

VEHICLE TAB

6. Enter recorded data in ECM as detailed in *ENTERING THE COLLECTED INFORMATION INTO THE ECM.*

2nd Collecting Method: Collect the Information from the Vehicle and BOSSWeb

1. Record engine serial number.

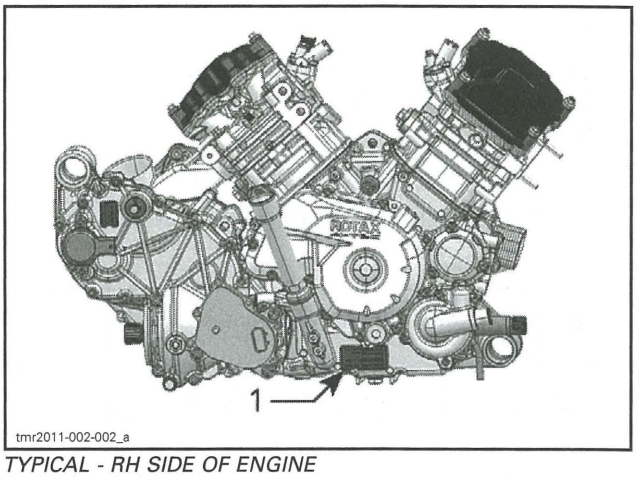

TYPICAL - RH SIDE OF ENGINE
1. Engine serial number

2. Record the following numbers using BOSSWeb. Look in **Service** menu and choose **Unit History**.
   1. Vehicle serial number
   2. Vehicle model number
   3. Customer name.

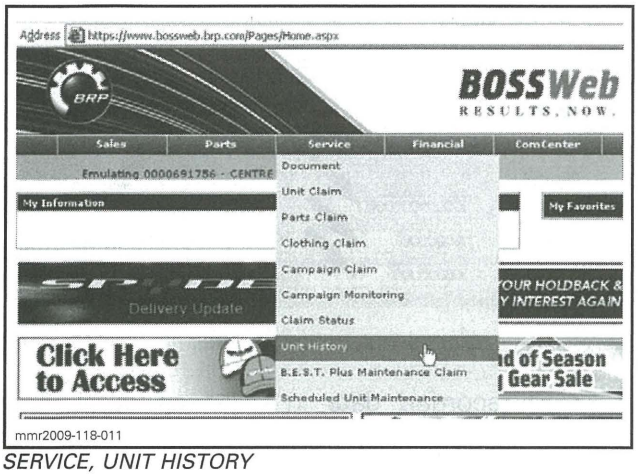

SERVICE, UNIT HISTORY

3. Enter the recorded data in the new ECM as detailed in *ENTERING THE COLLECTED INFORMATION INTO THE ECM*.

Entering the Collected Information Into the ECM

1. Use the applicable B.U.D.S. version. Refer to *COMMUNICATION TOOLS AND B.U.D.S.* subsection.
2. Turn ignition key to ON position.
3. In B.U.D.S., click the **Read Data** button to read the new ECM.

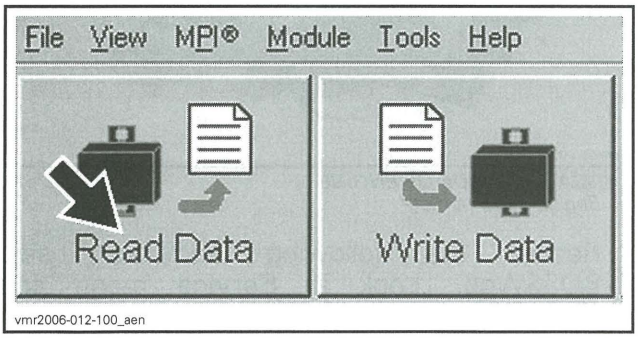

The following screen window will pop up.

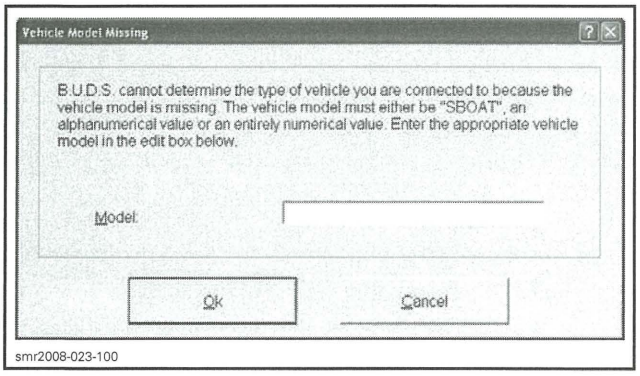

4. Enter the vehicle model number.

NOTICE Enter only the appropriate product model number as obtained when gathering the information.

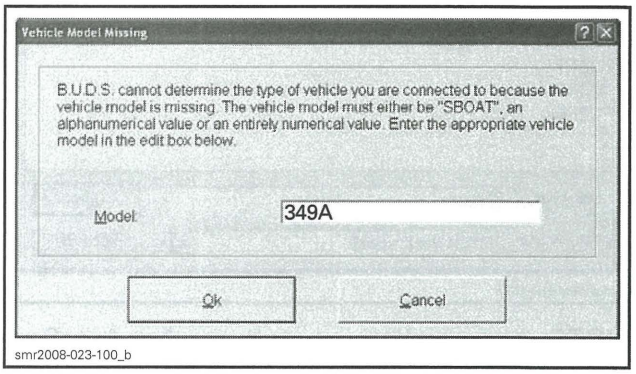

5. Select the **Vehicle** tab and enter the information you recorded previously.
   1. Vehicle serial number
   2. Engine number (do not enter the "M" at the beginning of the engine number)
   3. Customer name.

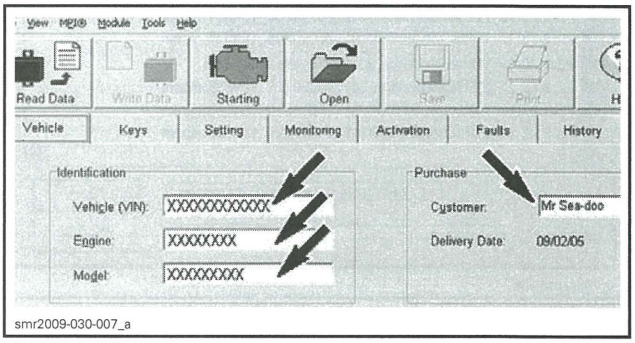

VEHICLE TAB

6. Click on the following tabs:
   - **History**
   - **Part Replacement**
   - **Add Part in History**.
7. Enter the **old** ECM serial number in the **Add Part In History** window.

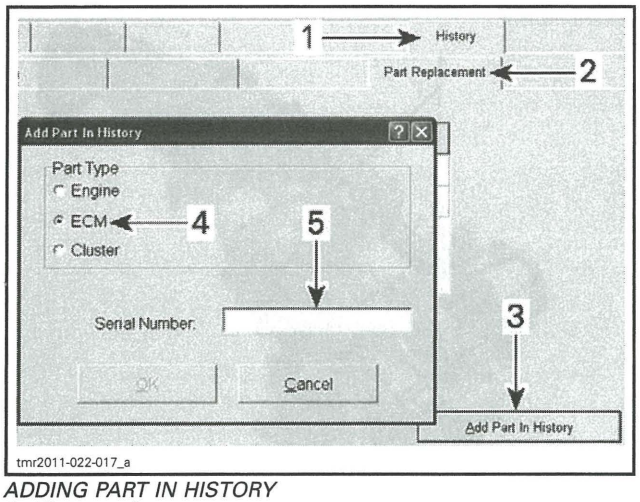

ADDING PART IN HISTORY
1. **History** *tab*
2. **Part Replacement** *tab*
3. **Add part in history** *button*
4. **ECM** *selection*
5. *Add ECM serial number here*

NOTE: The ECM serial number can be found on the ECM sticker that also identifies the part number.

8. Click on the **OK** button.
9. Set the proper options in the following pages:
   - ECM
   - Cluster
   - Vehicle configuration.
10. Click on the **Write Data** button.

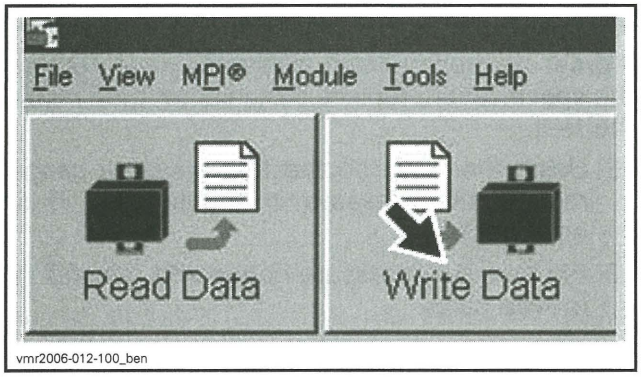

11. Perform the *ECM FIRST INITIALIZATION* reset.
12. Program the vehicle ignition keys into the new ECM, refer to *Digital Encoded Security System (D.E.S.S.)* subsection.
13. Reinstall any remaining removed parts.

FUEL INJECTOR

Fuel Injector Operation Test Using B.U.D.S. (Dynamic)

NOTE: As a first troubleshooting step, always check for applicable fault codes using B.U.D.S.

1. Connect vehicle to the applicable B.U.D.S. version. Refer to *COMMUNICATION TOOLS AND B.U.D.S.* subsection.
2. Start engine.
3. In B.U.D.S., select the following:
   - **Read Data** button
   - **Monitoring** tab
   - **ECM** tab.
4. Using the B.U.D.S., shut down fuel injection to each engine cylinder one at a time by clicking on the button under the applicable cylinder.

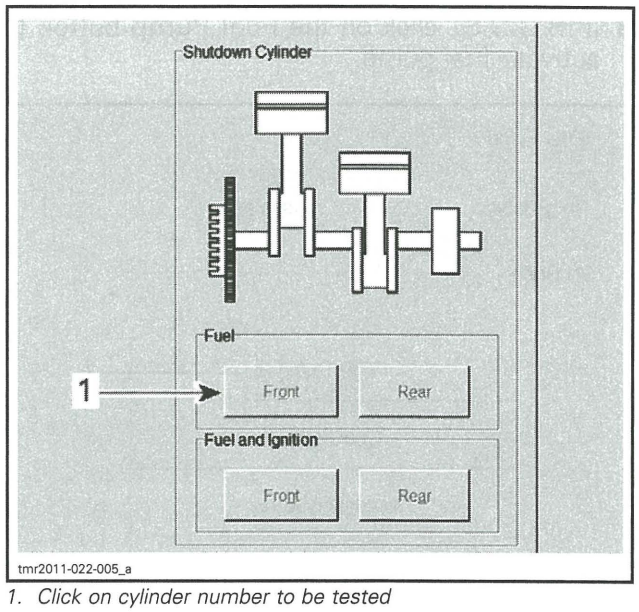

1. *Click on cylinder number to be tested*

If the engine RPM drops momentarily when clicking on a cylinder, the injector on this cylinder is functioning normally.

If the engine RPM does not drop momentarily when clicking on a cylinder, this cylinder is not functioning properly. Check the following:
- Fuel injector operation. Refer to *FUEL INJECTOR BALANCE TEST USING B.U.D.S.*
- Spark plug and ignition coil. Refer to *IGNITION SYSTEM* subsection.
- Engine condition.

Fuel Injector Balance Test Using B.U.D.S.

NOTICE **After fuel injector activation using B.U.D.S., always crank engine in drowned mode to ventilate engine and prevent a potential backfire due to fuel accumulation in engine.**

1. Install a fuel pressure gauge as described in *FUEL PUMP PRESSURE TEST* of *FUEL TANK AND FUEL PUMP* subsection.
2. Connect vehicle to the applicable B.U.D.S. software version. Refer to *COMMUNICATION TOOLS AND B.U.D.S.* subsection.
3. Turn the ignition key to ON.
4. In B.U.D.S., select the following:
   - **Read Data** button
   - **Activation** tab.
5. In B.U.D.S., click on the **Fuel Pump** button to activate fuel pump.

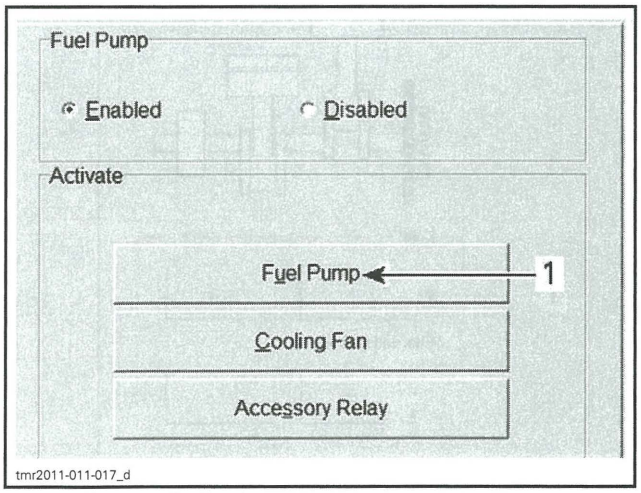

1. Fuel Pump activation button

6. Fuel pressure must be within specification. Refer to *FUEL TANK AND FUEL PUMP* subsection. Re-activate fuel pump as necessary.
7. In B.U.D.S., energize fuel injector **no. 1**.

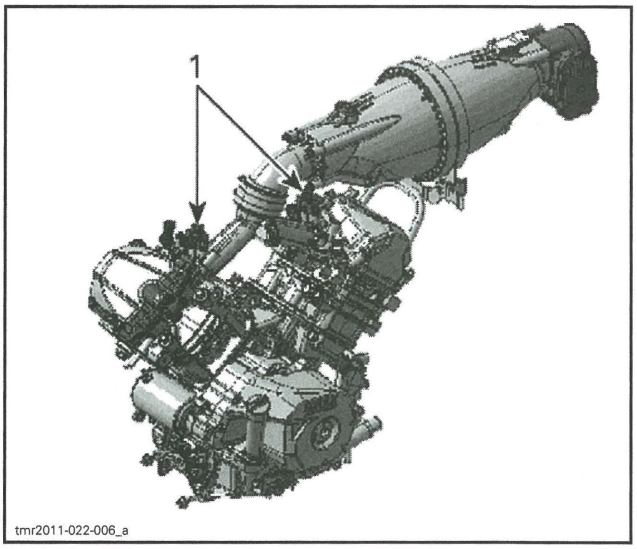

1. Click on injector to activate

8. Record the fuel pressure drop for injector **no. 1**.
9. In B.U.D.S., click on the Fuel Pump button to activate fuel pump.
10. Repeat the procedure for fuel injector **no. 2** and record the pressure drop for each injector.
11. The maximum fuel pressure drop between injectors should not exceed the following specification:

MAXIMUM FUEL PRESSURE DROP ALLOWED BETWEEN FUEL INJECTORS
10 kPa (1.5 PSI)

If pressure drop of any fuel injector is greater than the specification, replace that injector then repeat the test.

12. Using the valve on the fuel pressure gauge, release the pressure in the system (if so equipped).
13. Remove fuel pressure gauge and reinstall removed parts.

Fuel Injector Leak Test

Carry out the *FUEL PUMP PRESSURE TEST* as detailed in the *FUEL TANK AND FUEL PUMP* subsection.

Fuel Injector Activation Test Using B.U.D.S.

Turn ignition key to ON.

On the **Activation** page of B.U.D.S. software, energize the fuel injector to be tested.

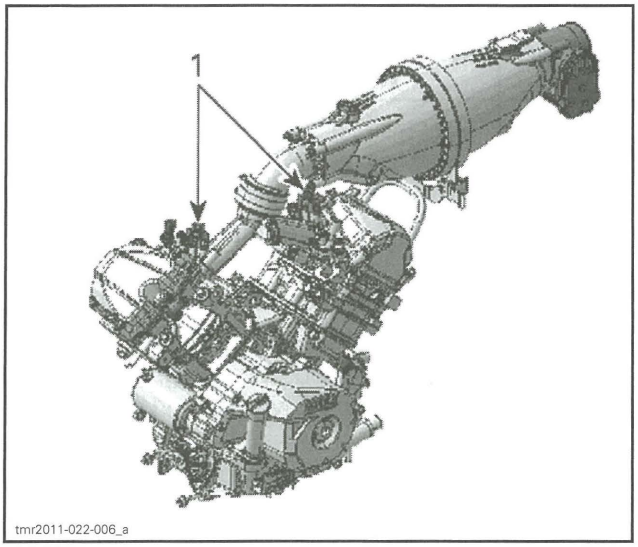

TYPICAL
1. Click on injector to activate

You should hear the injector functioning.

This will validate the injector mechanical and electrical operation.

If the injector does not function, carry out the *FUEL INJECTOR RESISTANCE TEST*.

Fuel Injector Resistance Test

Disconnect connector "A" from the ECM.

Disconnect the engine connector (HIC).

NOTE: The HIC connector is located to the right of the ECM.

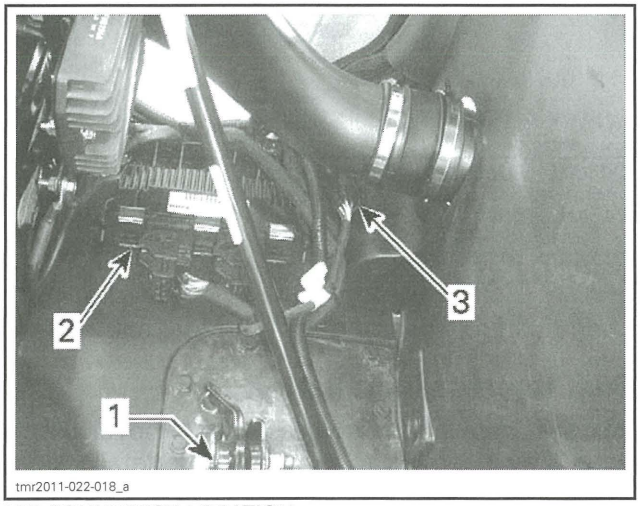

HIC CONNECTOR LOCATION
1. Accelerator pedal (not visible)
2. ECM
3. HIC connector

Using a FLUKE 115 MULTIMETER (P/N 529 035 868), check resistance value between terminals as follows.

FUEL INJECTOR RESISTANCE TEST AT HIC CONNECTOR			
INJECTOR	**HIC CONNECTOR**	**ECM CONNECTOR "A"**	**RESISTANCE @ 20°C (68°F)**
800R AND 1000 ENGINES			
FRONT	D	A-J1	11.4 - 12.6 Ω
REAR		A-K1	

If resistance value obtained is incorrect, remove injector connector and check resistance value between injector pins as follows.

FUEL INJECTOR RESISTANCE TEST AT INJECTOR CONNECTOR			
INJECTOR	**INJECTOR PIN**		**RESISTANCE @ 20°C (68°F)**
800R AND 1000 ENGINES			
FRONT	1	2	11.4 - 12.6 Ω
REAR			

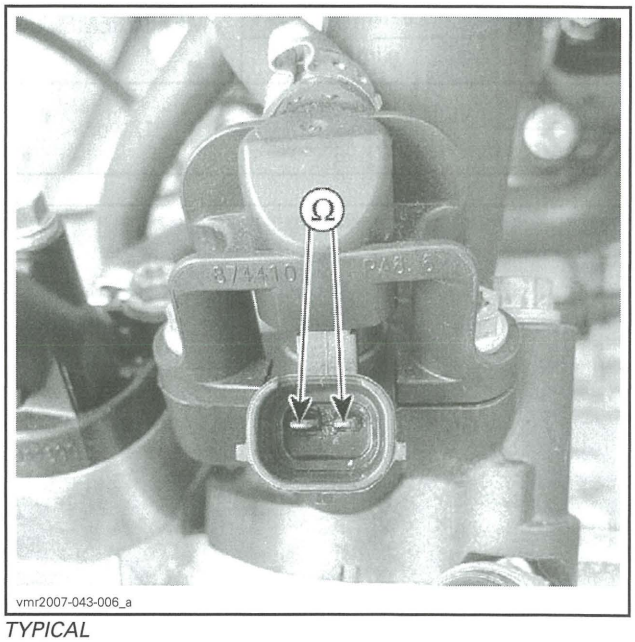

TYPICAL

If readings are out of specifications, replace injector.

If readings are good, carry out a *FUEL INJECTOR INPUT VOLTAGE* test.

Fuel Injector Input Voltage Test

Disconnect the fuel injector connector.

NOTE: If the connector is hard to unlock, gently use a screwdriver to release connector.

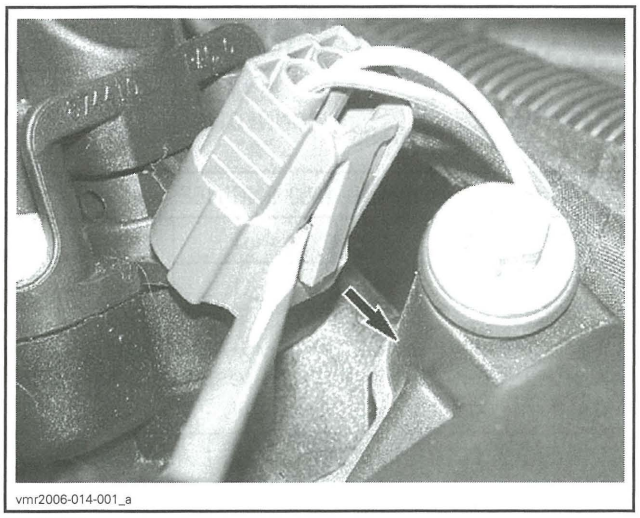
vmr2006-014-001_a

TYPICAL

NOTE: It is not necessary to activate the injector since it is continuously powered when the ignition key is set to ON.

Use a multimeter and set it to Vdc. Read voltage.

CYLINDER	INJECTOR CONNECTOR		MEASUREMENT
	WIRE		
FRONT	VIOLET/ BLUE	Battery ground	12 Vdc
REAR			

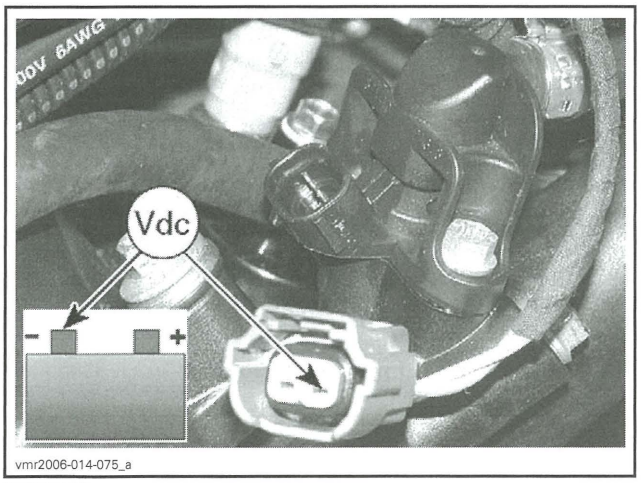

vmr2006-014-075_a

TYPICAL

If supply voltage is not good, check continuity between fuse F5 and injector (see *WIRING DIAGRAMS*).

NOTE: Probe fuse exactly as shown. This validates fuse at the same time.

Use a multimeter and set it to Ω. Read resistance.

CYLINDER	INJECTOR CIRCUIT		MEASUREMENT
	WIRE		
FRONT	VIOLET/ BLUE	Fuse F5	Close to 0 Ω
REAR			

If continuity is good, check relay and wiring from battery.

If continuity is faulty, check fuse and if OK, repair/replace wiring going to injector.

If supply voltage is good, check ground circuit between injector and ECM (see *WIRING DIAGRAMS*).

- If ground circuit is faulty, repair/replace wiring and connectors.
- If ground circuit is good, refer to *ECM REPLACEMENT*.

Fuel Injector Removal

To remove the injector, first remove the fuel rail refer to *FUEL RAIL* for the procedure.

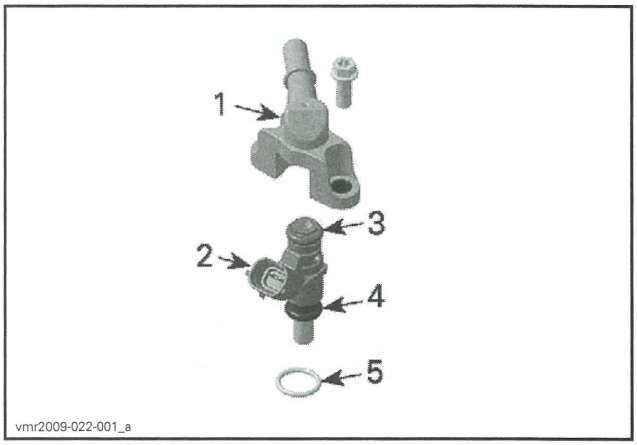

vmr2009-022-001_a

TYPICAL - FUEL RAIL ASS'Y
1. *Fuel rail*
2. *Fuel injector*
3. *Injector top O-ring*
4. *Injector bottom O-ring*
5. *Manifold O-ring*

Then pull fuel injector out of the fuel rail.

Fuel Injector Installation

For the installation, reverse the removal procedure. Pay attention to the following details.

Apply a thin film of engine oil to O-rings to ease insertion in rail.

Install fuel injector with your hand. Do not use any tool.

FUEL INJECTOR INSTALLATION		
O-RINGS	New	Lubricate with engine oil

Position the manifold O-ring on injector as in following illustration.

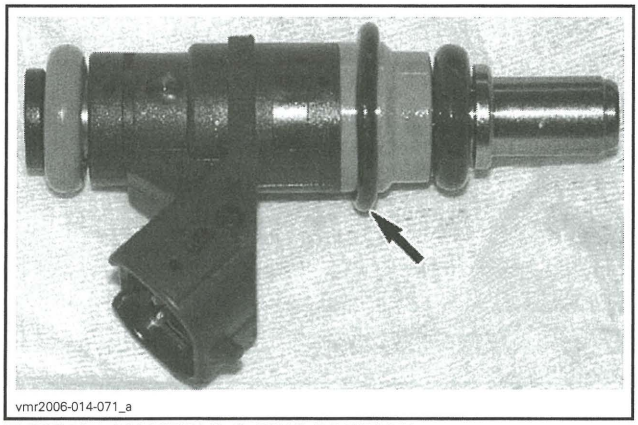

TYPICAL - MANIFOLD O-RING POSITION

Carefully insert injector in manifold paying attention to the manifold O-ring.

NOTICE **Gently push O-ring in evenly all around while inserting injector. O-ring must be completely inserted and not visible, before completing the insertion of the injector.**

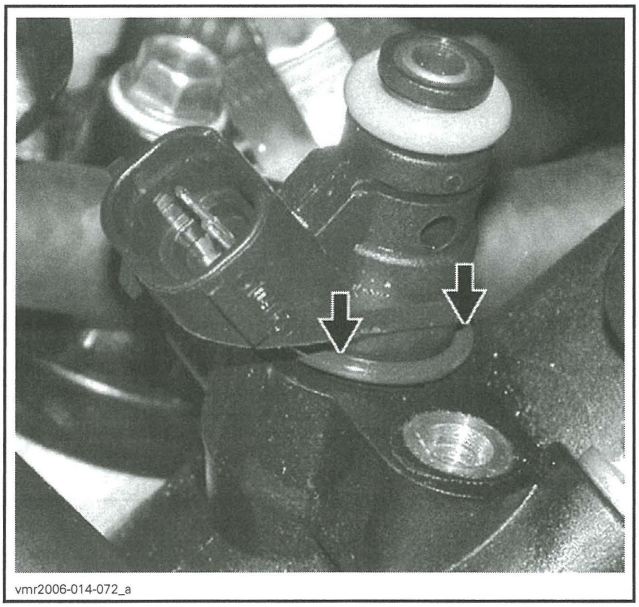

Firmly push injector until it bottoms out.

Reinstall fuel rail.

FUEL RAIL

Fuel Rail Replacement

Fuel Rail Removal

1. Connect vehicle to the applicable B.U.D.S. software version and select the following:
   - **Read Data** button
   - **Activation** tab
   - **ECM** tab
   - Fuel pump **Disabled**.

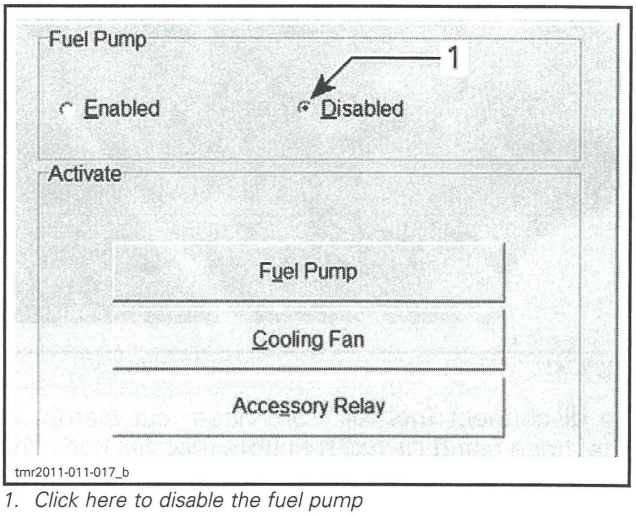

1. Click here to disable the fuel pump

2. Release fuel pressure by running engine until it runs out of gas.
3. Turn ignition key **OFF**.
4. Wrap a rag around the inlet hose and release the quick fitting.

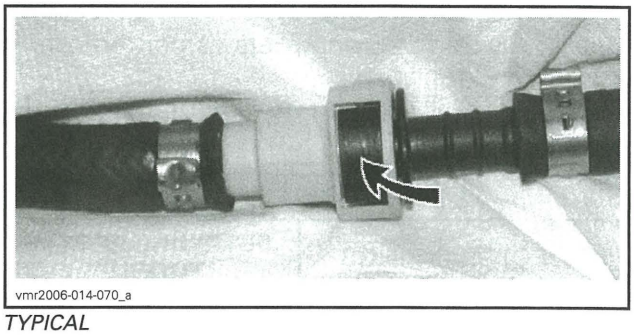

TYPICAL

5. Unscrew rail retaining screws.
6. Gently pull rail off by hand.

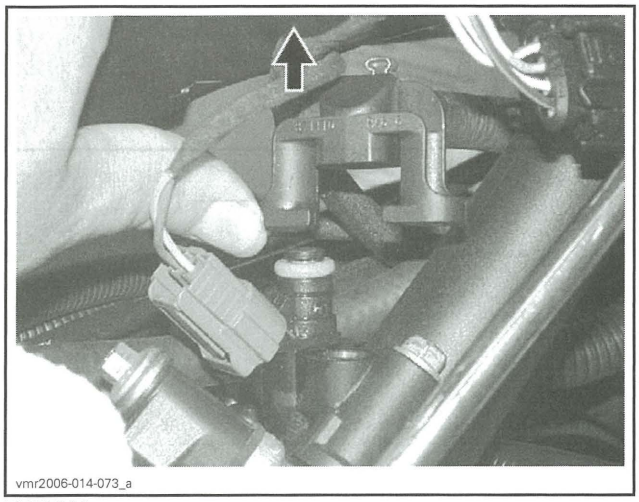
vmr2006-014-073_a

TYPICAL

To disconnect fuel rail from hose, cut clamp on fuel hose using OETIKER PLIERS (P/N 295 000 070). Refer to *FUEL TANK AND FUEL PUMP* for clamp removal/installation procedures.

NOTE: If fuel rail is removed for access to fuel injector, it is not necessary to cut hose clamp. Only to replace fuel rail.

Fuel Rail Installation

For installation, reverse the removal process however, pay attention to the following.

Install new clamps using pliers as per removal (if fuel rail was replaced).

Install fuel rail and evenly tighten screws a little at a time each side.

FUEL RAIL INSTALLATION	
INJECTOR O-RINGS	RETAINING SCREW TORQUE
NEW (Lubricate with engine oil)	10 N•m ± 1 N•m (89 lbf•**in** ± 9 lbf•**in**)

After securing fuel hose quick fitting to injector, re-enable fuel pump using B.U.D.S.

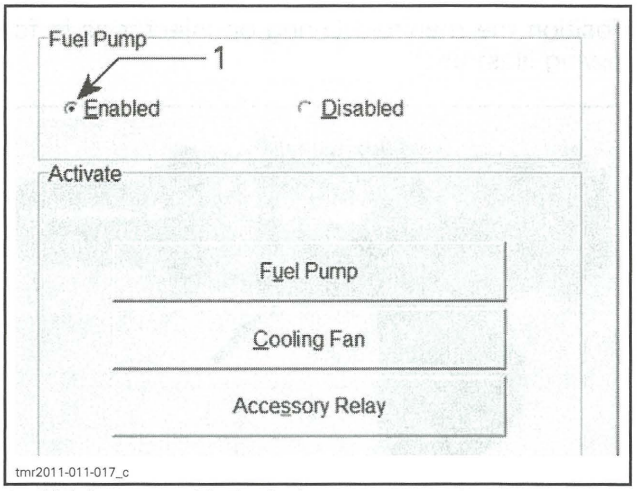

tmr2011-011-017_c

1. *Click here to enable the fuel pump*

⚠ WARNING

Perform a fuel pressure test and ensure that there is no leak. Refer to *FUEL TANK AND FUEL PUMP*. Run engine and check for leaks.

THROTTLE BODY

Throttle Body Description

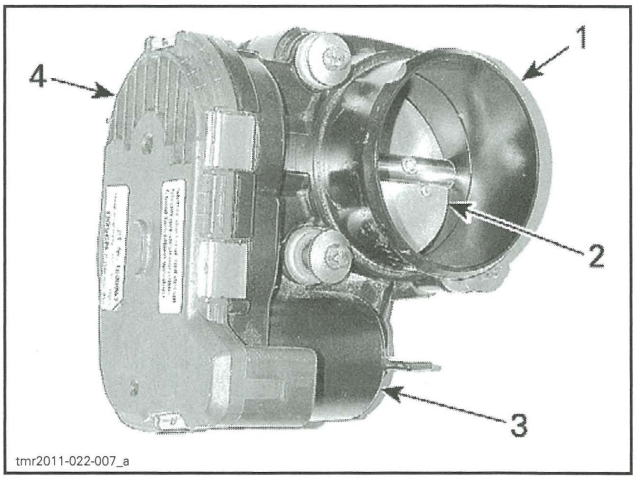

tmr2011-022-007_a

1. *Throttle body*
2. *Throttle plate*
3. *Electronic throttle actuator (electric motor inside)*
4. *Throttle position sensor (TPS) (inside)*

Throttle Body Access

Refer to *AIR INTAKE SYSTEM* and remove the following parts:

- Air filter housing
- Air intake adapter.

Throttle Body Lubrication

No lubrication is required.

Throttle Body Cleaning

1. Remove air inlet hose from throttle body.
2. Check throttle body cleanliness using a flashlight. Fully open throttle plate and verify:
- Throttle body bore
- Throttle plate edge.

Look for:
- Dirt
- Oily surfaces
- Carbon and salt deposits on throttle plate and the surrounding bore.

3. Clean as necessary.
4. Use a throttle body cleaner such as GUNK INTAKE MEDIC or an equivalent.

NOTICE **Only use an appropriate throttle body cleaner that will not damage O-rings and EFI sensors.**

⚠ CAUTION **Use the product in a well ventilated area. Refer to product manufacturer's warnings.**

5. To avoid getting dirt into engine, spray cleaner on a clean rag then rub rag against throttle plate and bore. A toothbrush may also be used.

⚠ CAUTION **Ensure ignition key is removed so that nobody can activate the electrical system, otherwise the ECM would turn on and the throttle actuator (ETA) would cycle. This could cause serious finger injury as the throttle plate moves quickly.**

6. Gently open throttle plate and hold fully open to reach all surfaces.
7. To remove residual dirt, spray cleaner on throttle plate and on bore.
8. Reinstall removed parts.

Throttle Body Removal

1. Disconnect air inlet hose from throttle body.
2. Disconnect throttle body connector.

To remove connector from throttle body, simultaneously press the end of both connector locking tabs illustrated.

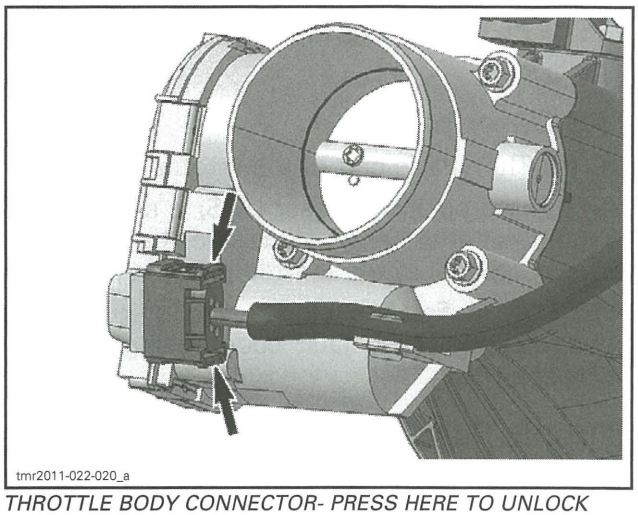

THROTTLE BODY CONNECTOR- PRESS HERE TO UNLOCK

3. Remove screws retaining throttle body to plenum.

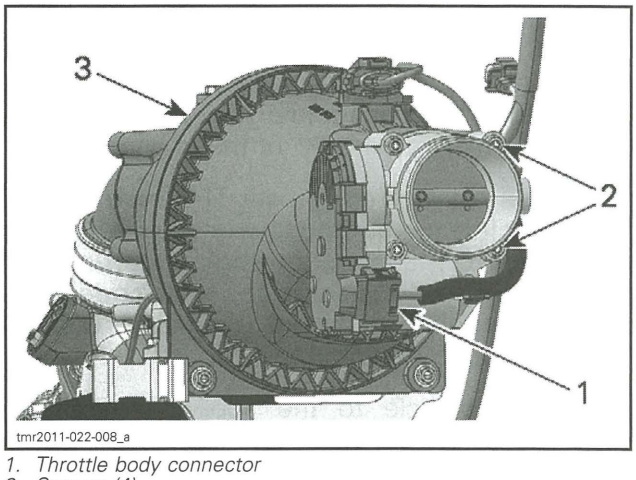

1. *Throttle body connector*
2. *Screws (4)*
3. *Plenum*

4. Pull throttle body off plenum.

Throttle Body Installation

Installation of the throttle body is the reverse of the removal procedure. However, pay attention to the following.

TORQUE FOR THROTTLE BODY RETAINING SCREWS
10 N•m ± 1.2 N•m (89 lbf•**in** ± 11 lbf•**in**)

1. Perform the *THROTTLE POSITION SENSOR INITIALIZATION* reset procedure. Refer to *THROTTLE POSITION SENSOR (TPS)* in this subsection.

THROTTLE POSITION SENSOR (TPS)

TPS Description

NOTE: The TPS is part of the throttle body.

The throttle position sensor (TPS) is a double potentiometer that sends signals to the ECM that are proportional to the throttle plate angle.

NOTE: As a first troubleshooting step, always check for applicable fault codes using B.U.D.S. software.

Throttle Position Sensor Initialization

NOTE: The TPS iniatialization procedure **must** be carried out whenever the throttle body is replaced, unless an ECM first initialization reset is carried out.

This operation performs a reset of the TPS basic values in the ECM. This reset is very important as the TPS values are part of the basic parameters for all fuel mapping calculations and control of several settings such as for idle speed, LIMP HOME mode and maximum RPM of the engine.

NOTICE **An improperly set TPS may lead to improper idle speed (too low or too high), poor engine performance, poor engine starting and engine stop on deceleration, fault codes and possible engine damage. Emission compliance may also be affected.**

1. Connect vehicle to the applicable B.U.D.S. software version, refer to *COMMUNICATION TOOLS AND B.U.D.S.* subsection.
2. In B.U.D.S., select the following:
   - **Read Data** button
   - **Setting** tab
   - **ECM** tab.

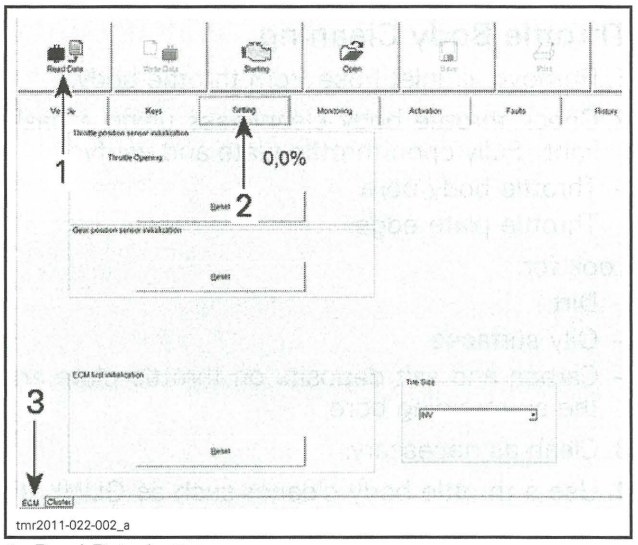

1. **Read Data** *button*
2. **Setting** *tab*
3. **ECM** *tab*

3. Ensure the accelerator pedal is fully released and at the idle position.
4. In the **Throttle position sensor initialization** field, click on the **Throttle Opening Reset** button.

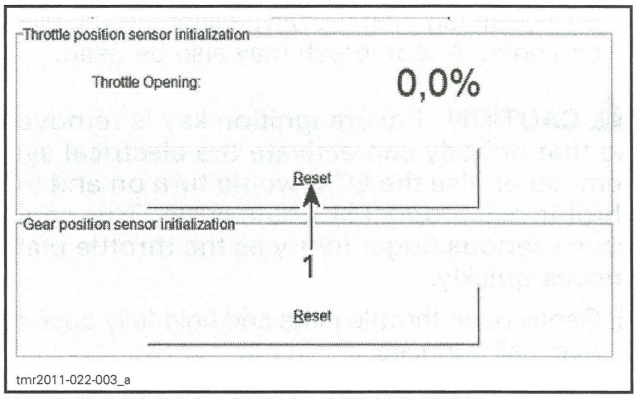

THROTTLE POSITION SENSOR INITIALIZATION
1. **Throttle Opening Reset** *button*

A message will be displayed if the operation is successful.

If an error occurred or the TPS is not within the allowed range while resetting, the ECM will generate a fault code and will not accept the setting.

5. If a fault message is displayed, follow the instructions in the message(s).
6. Check for fault codes.
7. If a fault code is generated,
   - Carry out the service actions.
   - Reset the fault.
   - Repeat the reset procedure.
8. Start engine and make sure it operates normally throughout its full engine RPM range.

TPS Wear Test

1. With the engine turned off, slowly press on the accelerator pedal and pay attention for smooth operation without physical stops.
2. Activate the electrical system to wake up the ECM.
3. Connect vehicle to the applicable B.U.D.S. software version. Refer to *COMMUNICATION TOOLS AND B.U.D.S.* subsection.
4. In B.U.D.S., select the following:
   - **Monitoring** tab
   - **ECM** tab.
5. Slowly and regularly move the accelerator pedal.
6. Observe the Throttle Opening indication movement in B.U.D.S.

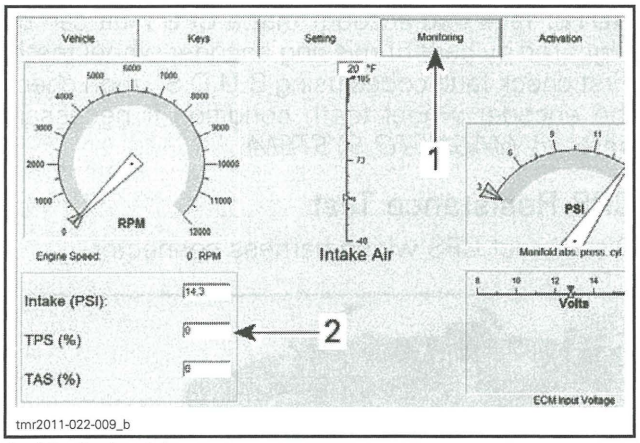

1. *Monitoring tab*
2. *TPS indication*

NOTE: The indication should move gradually and regularly as you move the accelerator pedal. If the TPS indication is erratic or suddenly drops off, it may indicate a worn TPS that needs to be replaced. An initial slight delay after the accelerator pedal is moved and before the indication starts to move is normal.

If the indication behavior is not as expected, proceed with the following steps.

7. Manually move the throttle plate in the throttle body using a blunt tool (without sharp tip).

⚠ CAUTION Do not move throttle plate with your fingers. Otherwise, if ECM should turn off, it would quickly close the throttle plate which could cause finger injury.

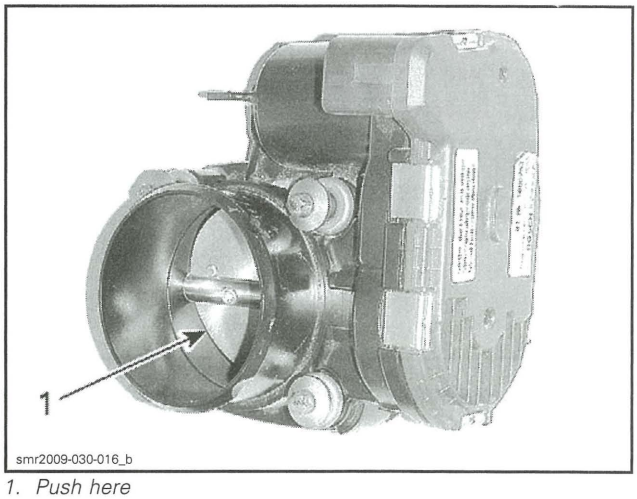

1. *Push here*

8. Check the indication movement again.

- If the indication moves as expected, check the throttle accelerator sensor (TAS). Refer to *THROTTLE ACCELERATOR SENSOR (TAS)* in this subsection.
- If the indication does not move as expected, perform the *TPS RESISTANCE TEST* in this subsection.

TPS Resistance Test

1. Ensure the throttle body connector is properly connected.
2. Disconnect ECM connector A from the ECM and install it on the ECM ADAPTER TOOL (P/N 529 036 166).
3. Use the FLUKE 115 MULTIMETER (P/N 529 035 868) and select Ω.
4. Probe circuit as per following table while using your hand to manually move throttle plate.

ECM ADAPTER		FULLY CLOSED THROTTLE PLATE (1)		FULLY OPEN THROTTLE PLATE	
		RESISTANCE (Ω)			
PIN		MIN.	MAX.	MIN.	MAX.
A-A2	A-K4	875	1625	875	1625
A-A2	A-K3	954	1934	228	585
A-A2	A-F3	254	634	980	1983
A-K3	A-K4	228	585	954	1934
A-K3	A-F3	1385	2315	1385	2315
A-K4	A-F3	980	1983	254	634

(1) To obtain the fully closed position, it is necessary to push against the throttle plate in the throttle body with your hand and hold it in this position for the measurement.

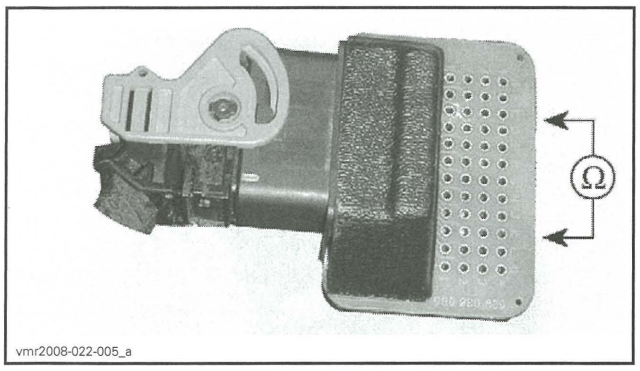

If any resistance value is incorrect, check wire continuity between ECM and throttle body before assuming the TPS is at fault. Refer to *WIRING DIAGRAM* subsection.

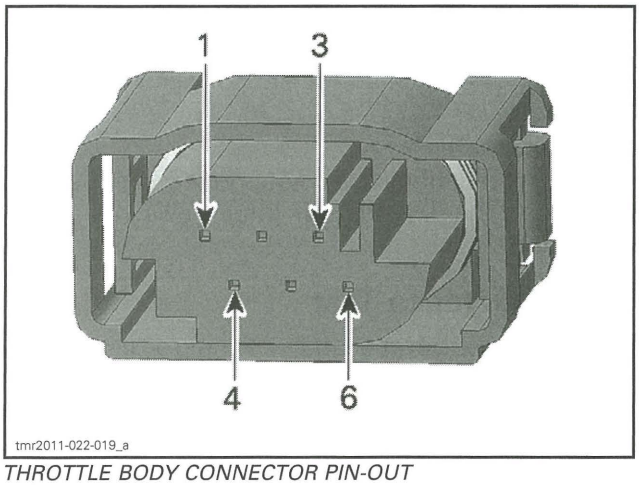

THROTTLE BODY CONNECTOR PIN-OUT

TPS Replacement

Carry out a *THROTTLE POSITION SENSOR INITIALIZATION* procedure as detailed in *THROTTLE BODY* of this subsection.

CRANKSHAFT POSITION SENSOR (CPS)

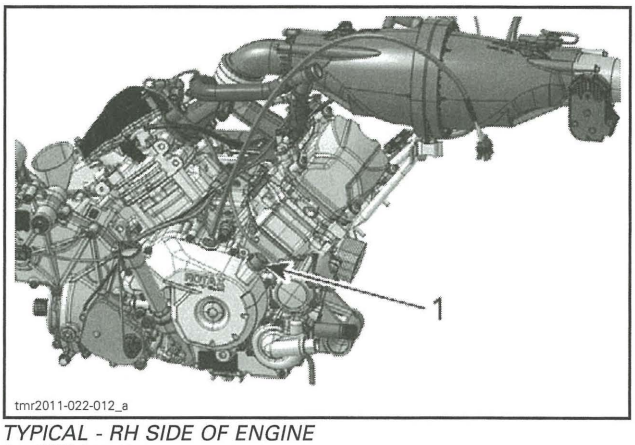

TYPICAL - RH SIDE OF ENGINE
1. CPS location

NOTE: Take into account that a CPS fault can be triggered by bent or missing encoder wheel teeth. First check fault codes using B.U.D.S., then check the encoder wheel teeth condition if necessary (refer to *MAGNETO SYSTEM*).

CPS Resistance Test

Disconnect CPS wiring harness connector.

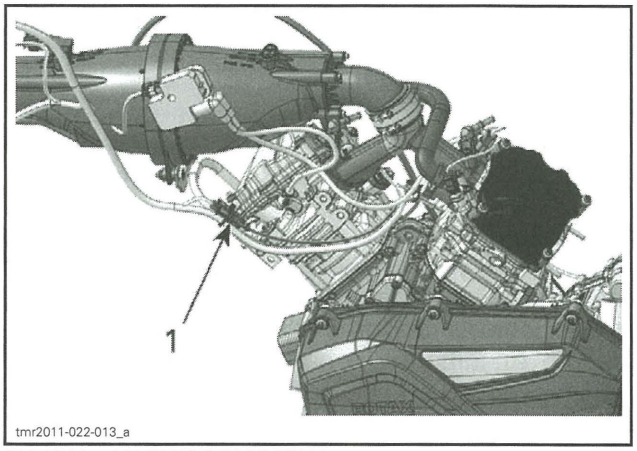

TYPICAL - LH SIDE OF VEHICLE
1. CPS connector location

Probe terminals as per following table.

CPS CONNECTOR		MEASUREMENT
PIN		RESISTANCE Ω @ 20°C (68°F)
1	2	700 - 900 Ω

If resistance is not within specifications, replace the CPS.

If resistance tests good, **reconnect** the CPS connector and disconnect the connector "A" on the ECM.

Install ECM-A connector on ECM ADAPTER TOOL (P/N 529 036 166).

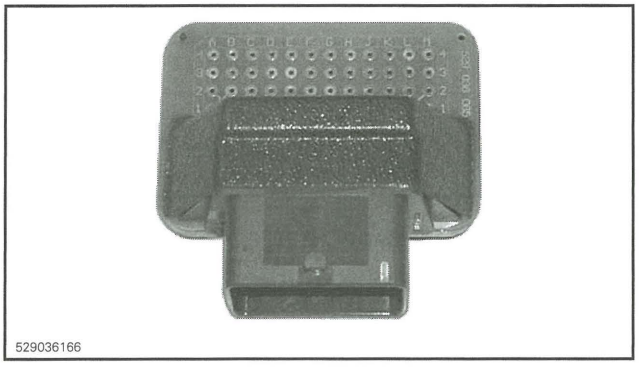

Using a multimeter, recheck resistance as per table.

ECM CONNECTOR		MEASUREMENT
PIN		RESISTANCE Ω @ 20°C (68°F)
A-H1	A-K2	700 - 900 Ω

If resistance value is correct, refer to *ECM REPLACEMENT*.

If resistance value is incorrect, repair the connectors or replace the wiring harness between ECM connector and the CPS.

CPS Replacement

Disconnect CPS connector and cut harness locking tie.

Remove CPS retaining screw and pull up on CPS to remove it.

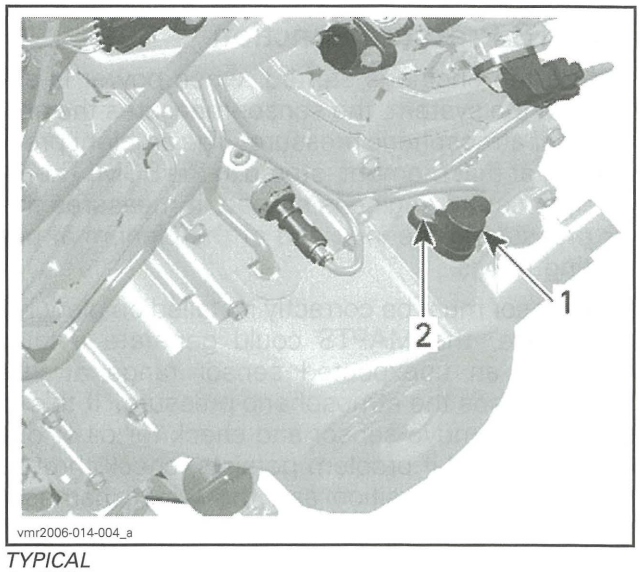

TYPICAL
1. *CPS*
2. *Retaining screw*

Install new CPS and secure harness with a new locking tie.

CPS INSTALLATION	
O-RING	PRODUCT
	XPS SYNTHETIC GREASE (P/N 293 550 010)
SENSOR SCREW	TORQUE
	10 N•m ± 1 N•m (89 lbf•**in** ± 9 lbf•**in**)

MANIFOLD AIR PRESSURE AND TEMPERATURE SENSOR (MAPTS)

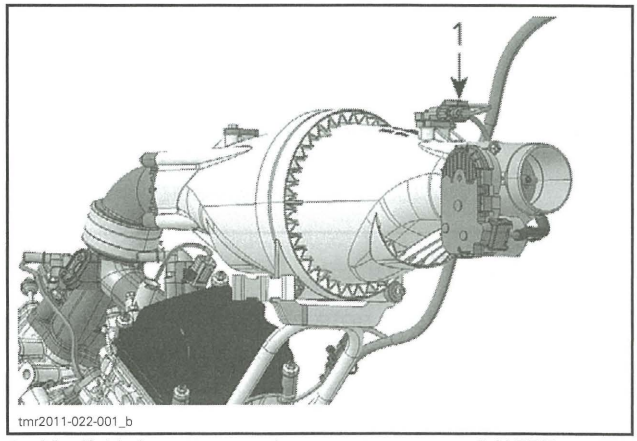

1. *Manifold air pressure and temperature sensor (MAPTS)*

NOTE: This sensor is a multifunction device.

MAPTS Pressure Function

Before the engine is started, when power is applied to the system, the sensor measures the ambient air atmospheric pressure. The ambient pressure is, at that moment, stored in the ECM. Thereafter, once the engine is started, it measures the air pressure in the inlet end of the plenum at operating RPMs.

The sensor must be correctly installed on plenum. Otherwise, the MAPTS could generate a fault code for an unexpected sensor range at idle when it reads the atmospheric pressure. If this is the case, remove sensor and check for oil or dirt on its end and if problem persists, check throttle plate condition/position and the wiring harness. Perform the following tests.

MAPTS Pressure Function Quick Test

1. Connect vehicle to the applicable B.U.D.S. software version.
2. In B.U.D.S., select the following:
   - **Read Data**
   - **Monitoring** tab
   - **ECM** tab.

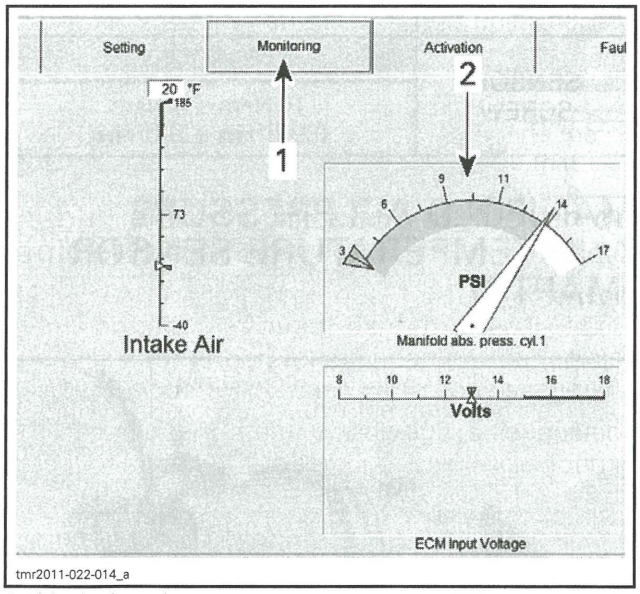

1. Monitoring tab
2. MAPTS pressure reading

3. Look for and take note of the MAPTS pressure reading while the engine is stopped.
4. Perform the same test with a new MAPTS and compare both readings.

Values have to be within ± 3.4 kPa (0.5 PSI).

MAPTS PRESSURE FUNCTION QUICK TEST			
RESULT	SERVICE ACTION		
NO READING	Circuit Continuity Test of MAPTS Pressure Function	MAPTS Input Voltage Test	Repair or replace wiring
VALUE IS OUT OF RANGE	Replace MAPTS		

MAPTS Input Voltage Test

Check the voltage output from ECM to the pressure sensor.

1. Turn ignition key ON.
2. Remove electrical connector from MAPTS.
3. Using a FLUKE 115 MULTIMETER (P/N 529 035 868), measure for input voltage as per following table.

MAPTS CONNECTOR		MEASUREMENT
PIN		VOLTAGE
1	3	5 Vdc

If voltage test is good, replace the MAPTS.

If voltage test is not good, carry out the *MAPTS CIRCUIT CONTINUITY TEST (PRESSURE FUNCTION)*.

MAPTS Circuit Continuity Test (Pressure Function)

1. Disconnect the ECM "A" connector.
2. Install ECM-A connector on ECM ADAPTER TOOL (P/N 529 036 166).
3. Using a multimeter, check continuity of the following circuits.

MAPTS CIRCUIT CONTINUITY TEST (PRESSURE FUNCTION)		
ECM-A	MAPTS CONNECTOR	RESISTANCE VALUE
Pin B4	Pin 3	Close to 0 Ω
Pin G4	Pin 4	
Pin H2	Pin 1	

If resistance is not within specification, repair or replace the wiring harness between ECM connector and the MAPTS.

MAPTS Temperature Function

The sensor monitors the temperature in the inlet of the plenum.

MAPTS Quick Test (Temperature Function)

1. Connect vehicle to the applicable B.U.D.S. software version.
2. In B.U.D.S., select the following:
   - **Read Data**
   - **Monitoring** tab
   - **ECM** tab.
3. Look for the **Intake Air** temperature reading while the engine is stopped.

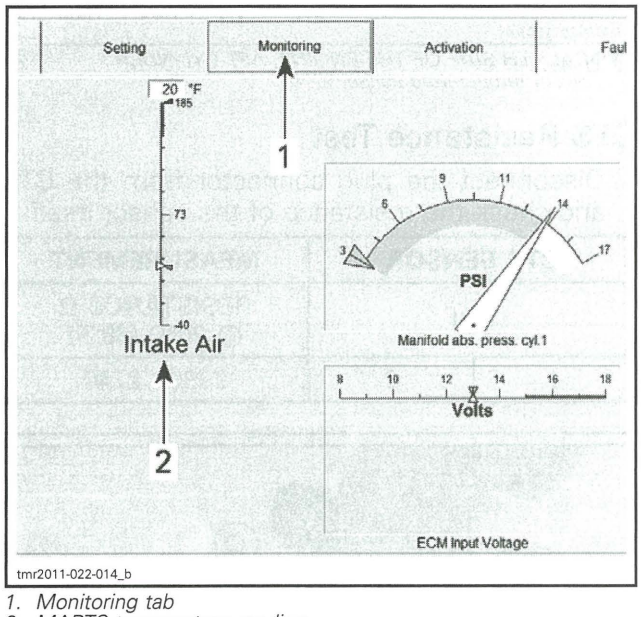

1. Monitoring tab
2. MAPTS temperature reading

4. Perform the same test with a new MAPTS and compare both readings.

If the engine's MAPTS temperature reading is significantly different than the new MAPTS, replace it.

NOTE: Both sensors must measure the same ambient air temperature.

If there is no reading, carry out a *MAPTS RESISTANCE TEST (TEMPERATURE FUNCTION).*

MAPTS Resistance Test (Temperature Function)

Disconnect the connector from the MAPTS.

Using the FLUKE 115 MULTIMETER (P/N 529 035 868), check the resistance of the sensor itself as shown.

MAPTS		MEASUREMENT
PIN		RESISTANCE Ω @ 20°C (68°F)
1	2	2280 - 2740

If resistance is not within specification, replace the MAPTS.

If resistance tests good, **reconnect** the MAPTS and disconnect the connector "A" from the ECM.

Install ECM-A connector on ECM ADAPTER TOOL (P/N 529 036 166).

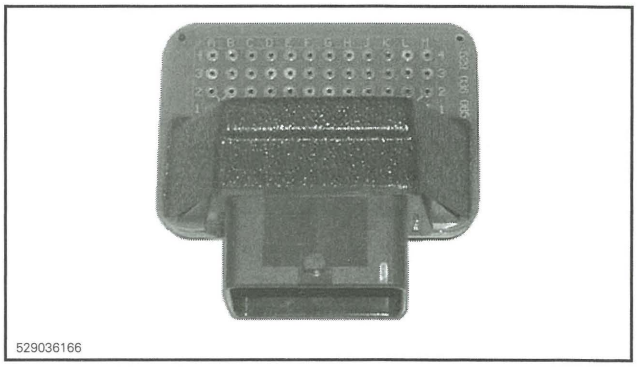

Using a multimeter, recheck resistance value as per following table.

ECM CONNECTOR		MEASUREMENT
PIN		RESISTANCE Ω @ 20°C (68°F)
A-H2	A-H3	2280 - 2740

MAPTS TEMPERATURE SENSOR TEST RESULTS			
RESULT	SERVICE ACTION		
NO READING	Circuit Continuity Test of MAPTS Temperature Function	MAPTS Input Voltage Test	Repair or replace wiring
INCORRECT RESISTANCE VALUE	Replace MAPTS		

MAPTS Circuit Continuity Test (Temperature Function)

MAPTS CIRCUIT CONTINUITY TEST (TEMPERATURE FUNCTION)		
ECM-A	MAPTS CONNECTOR	RESISTANCE VALUE
Pin H2	Pin 1	Close to 0 Ω
Pin H3	Pin 2	

MAPTS Replacement

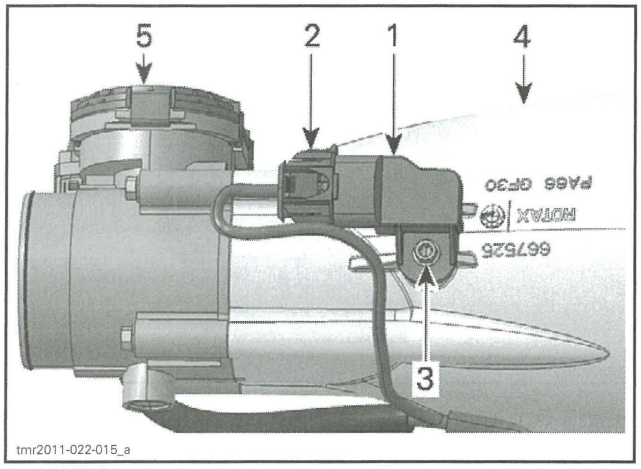

tmr2011-022-015_a

1. *MAPTS*
2. *MAPTS connector*
3. *Retaining screw*
4. *Plenum*
5. *Throttle body*

Disconnect MAPTS connector and remove the MAPTS from the plenum.

Install new MAPTS as per following table.

TORQUE	PRODUCT
6 N•m ± 0.7 N•m (53 lbf•**in** ± 6 lbf•**in**)	LOCTITE 243 (BLUE) (P/N 293 800 060)

CTS (COOLANT TEMPERATURE SENSOR)

CTS Access

The CTS is located on the LH of the engine, aft cylinder. To access it, remove the:

- Driver's seat
- LH lateral console panel.

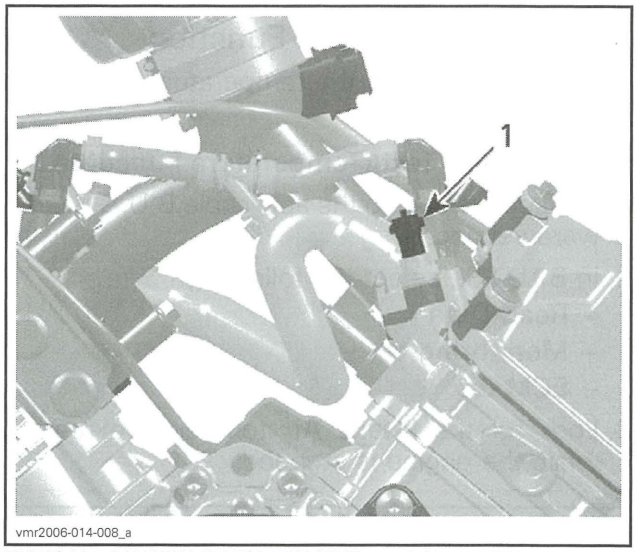

vmr2006-014-008_a

TYPICAL - LH SIDE OF THE ENGINE, AFT CYLINDER
1. Coolant temperature sensor (CTS)

CTS Resistance Test

1. Disconnect the plug connector from the CTS and check the resistance of the sensor itself.

CTS SENSOR		MEASUREMENT
PIN		RESISTANCE Ω @ 20°C (68°F)
1	2	2280 - 2740

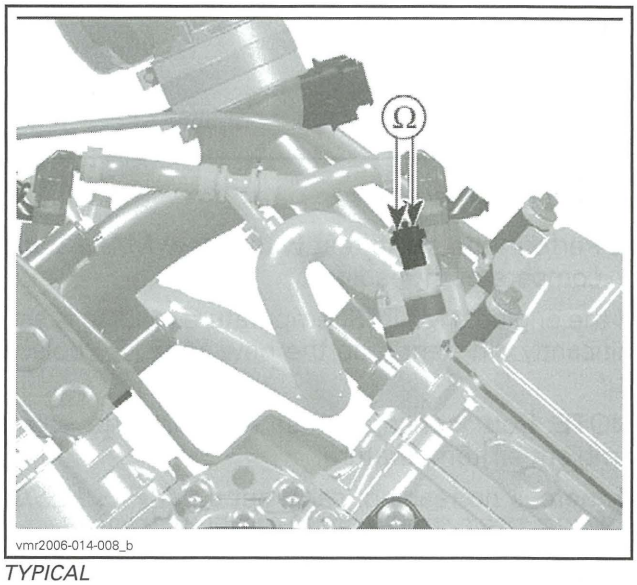

vmr2006-014-008_b

TYPICAL

If resistance is out of specification, replace the CTS.

If resistance test is good, **reconnect** the CTS and disconnect the ECM connector "A" from the ECM.

2. Install ECM-A connector on ECM ADAPTER TOOL (P/N 529 036 166).

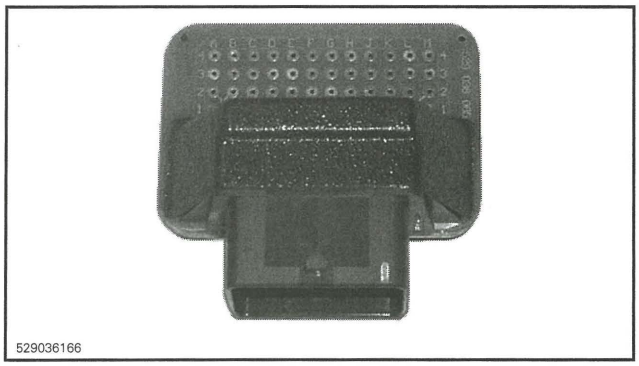

3. Using a multimeter, recheck resistance from the ECM connector as per table.

ECM "A" CONNECTOR		MEASUREMENT
PIN		RESISTANCE Ω @ 20°C (68°F)
A1	J2	2280 - 2740

If resistance value is correct, refer to *ECM REPLACEMENT*.

If resistance value is incorrect, repair the connectors or replace the wiring harness between ECM connector and the CTS.

CTS Replacement

1. Disconnect CTS connector and remove CTS.
2. Install the new CTS and torque as specified.

CTS TORQUE
16 N•m ± 2 N•m (142 lbf•**in** ± 18 lbf•**in**)

3. Reinstall remaining removed parts.
4. Refill and bleed the cooling system, refer to *COOLING SYSTEM* subsection.

FUEL TANK AND FUEL PUMP

SERVICE TOOLS

Description	Part Number	Page
ECM ADAPTER TOOL	529 036 166	277
FLUKE 115 MULTIMETER	529 035 868	276
FUEL HOSE ADAPTER	529 036 023	271
OETIKER PLIERS	295 000 070	274
PRESSURE GAUGE	529 035 709	271
VACUUM/PRESSURE PUMP	529 021 800	270, 281

SERVICE TOOLS – OTHER SUPPLIER

Description	Part Number	Page
FLUKE RIGID BACK PROBE	TP88	276

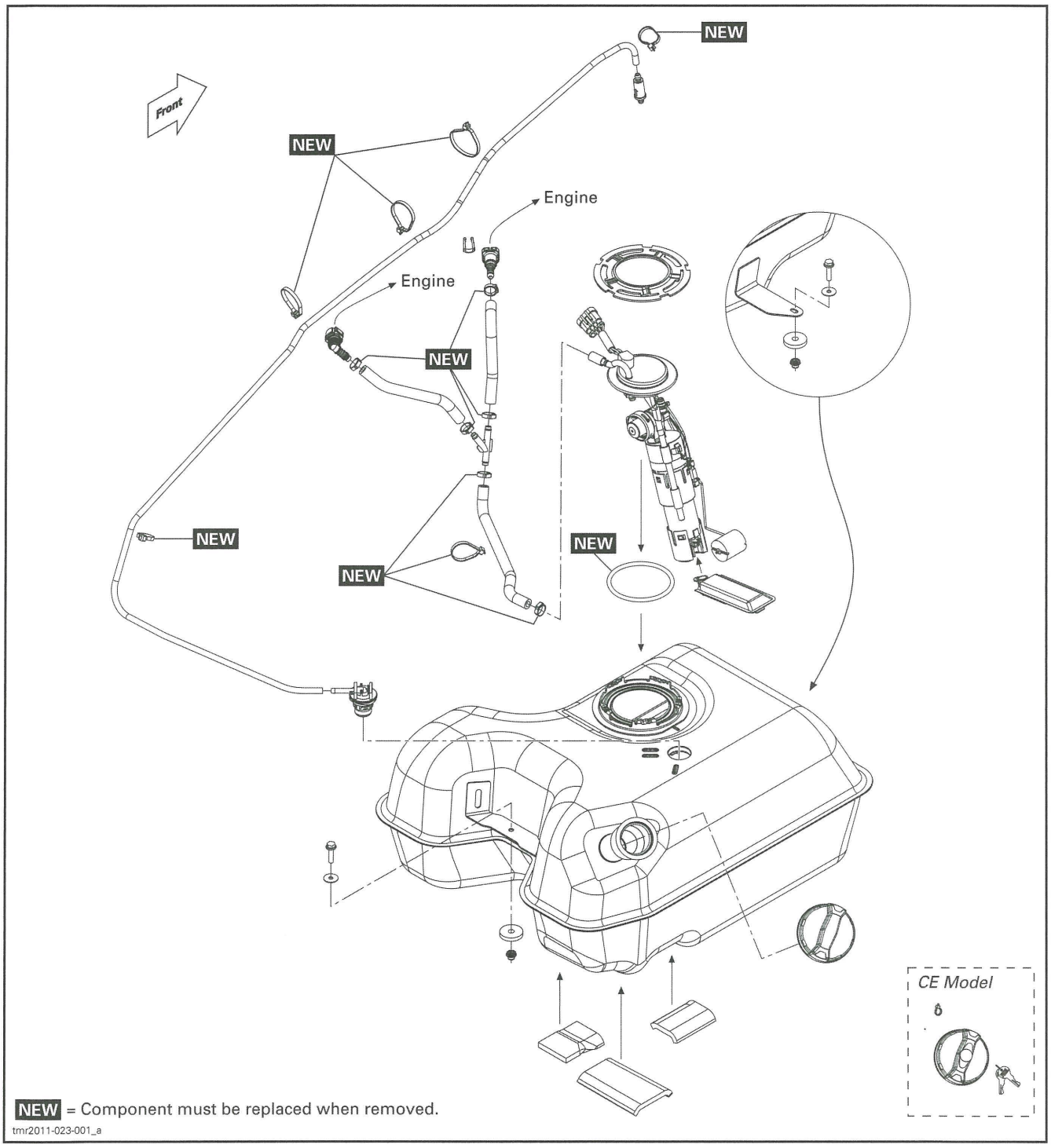
NEW
Front
NEW
Engine
Engine
NEW
NEW
NEW
NEW
CE Model
NEW = Component must be replaced when removed.
tmr2011-023-001_a

GENERAL

⚠ WARNING

Fuel is flammable and explosive under certain conditions. Ensure work area is well ventilated. Do not smoke or allow open flames or sparks in the vicinity.

⚠ WARNING

Always disconnect battery prior to working on the fuel system.

⚠ WARNING

Always proceed with care and use appropriate safety equipment when working on pressurized fuel system. Wear safety glasses.

⚠ WARNING

Do not allow fuel to spill on hot engine parts and/or on electrical connectors.

When the repair is completed, ensure that all hoses are connected and secured. Perform the *FUEL PRESSURE TEST* and the *FUEL TANK LEAK TEST* as explained in this subsection.

Fuel lines remain under pressure at all times. Proceed with care when removing/installing high pressure test equipment.

Use the B.U.D.S. software or disconnect the fuel pump electrical connector to disable fuel pump and crank engine to release fuel pressure prior to disconnecting any fuel hose.

Cover the fuel hose connections with an absorbent shop rag and carefully disconnect them to minimize spilling.

SYSTEM DESCRIPTION

Fuel Tank Vent System

The fuel tank is equipped with a vent system that ensures the fuel tank remains at ambient pressure.

Air can enter the fuel tank at all times through the fuel tank vent valve. This prevents negative pressure within the fuel tank which could cause fuel starvation.

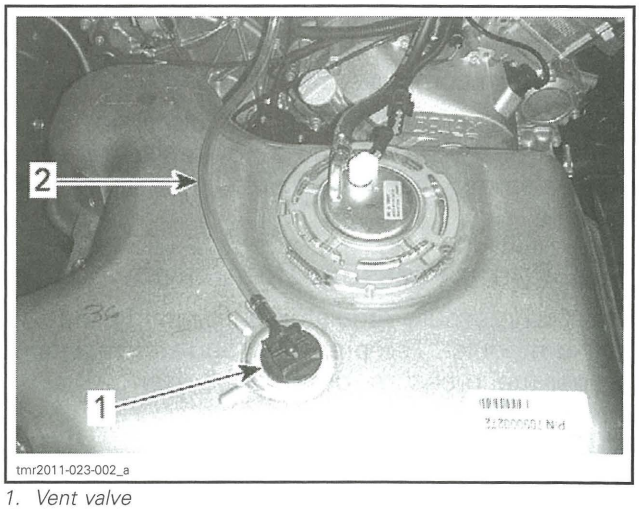

1. Vent valve
2. Air inlet hose

The vent valve also prevents fuel from flowing out through the inlet of the vent system should the vehicle be overturned.

Fuel Tank Vent Breather Filter

The air inlet hose of the vent system is equipped with an in-line breather filter that prevents entry of particles such as dust or small insects. It is located behind the air filter housing next to the coolant reservoir. To access the breather filter, remove the service cover.

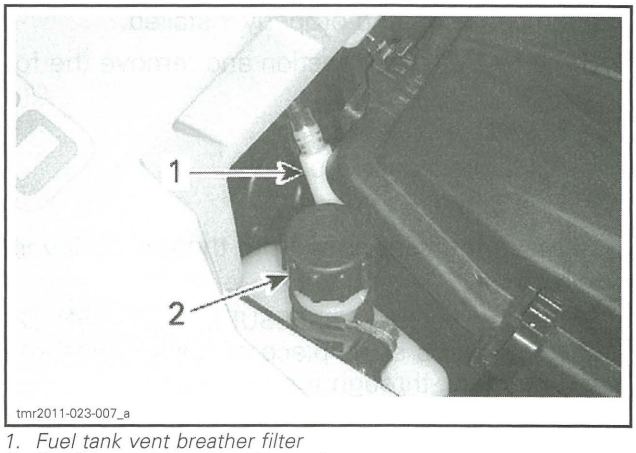

1. Fuel tank vent breather filter
2. Cooling system expansion tank

Fuel Pump Module

The fuel pump module is inserted in the fuel tank. It provides fuel delivery for the EFI system and encompasses the following components:

- Electric fuel pump
- Fuel pre-filter (replaceable)
- Fuel pressure regulator
- Fuel level sender.

Fuel Filters

The system comprises two levels of filtration.

A replaceable prefilter element attached to the bottom of the pump, and a non-replaceable fine filter element that is integral to the fuel pump module.

Fuel Pump Pressure Regulator

The fuel pressure regulator is integral to the fuel pump module. The pressure regulator maintains proper fuel pressure for the EFI system.

INSPECTION

FUEL TANK LEAK TEST

⚠ WARNING

Always carry out a fuel tank leak test whenever the fuel tank shows signs of wear or damage which may cause a leak, or when the fuel pump has been removed or replaced, or if you suspect a leak. If the fuel tank is damaged, the fuel tank should be replaced even if no leak is present. Do not attempt to repair the fuel tank.

1. Refill fuel tank and ensure fuel tank cap is in good condition and properly installed.
2. Refer to *BODY* subsection and remove the following:
   - RH passenger seat
   - RH lateral console panel
   - Fuel tank cover panel.
3. Remove the vent hose from the fuel tank vent valve.
4. Using the VACUUM/PRESSURE PUMP (P/N 529 021 800) and a short piece of hose, pressurize the fuel tank through the vent valve.

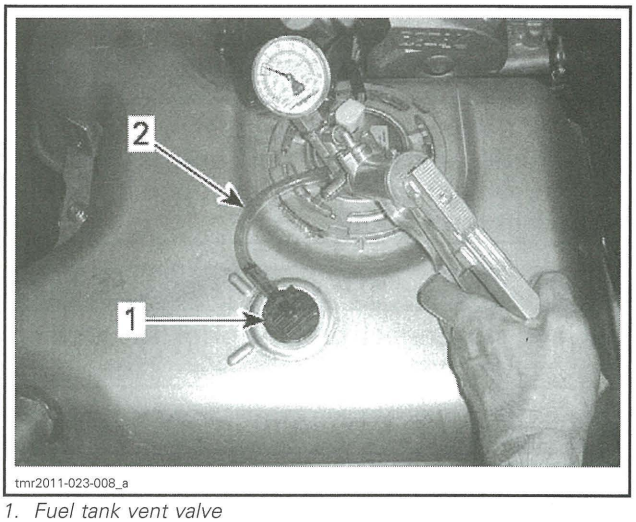

tmr2011-023-008_a

1. Fuel tank vent valve
2. Vent hose to vacuum/pressure pump

PRESSURE	TIME WITHOUT PRESSURE DROP
14 kPa (2 PSI)	3 minutes

If pressure drops, locate fuel leak(s) and repair or replace leaking component(s).

NOTE: In case of fuel tank leak, do not attempt repair. Fuel tank must be replaced.

To locate a leak, check for a fuel smell or leaking fuel.

To ease locating leak(s), spray soapy water on all hose connections and components; bubbles will indicate the leak location(s).

FUEL PUMP PRESSURE TEST

The pressure test will show the available pressure at the fuel pump outlet. It validates the pressure regulator, the fuel pump and tests for leaks in the system.

NOTE: Refer to the *FUEL SYSTEM DIAGNOSTIC FLOW CHART* to help diagnose a fuel system related problem.

1. Ensure there are no leaks from hoses and fittings. Repair any leak.
2. Ensure the fuel level in the tank is sufficient.
3. Before proceeding with the pressure test ensure the battery is fully charged. Battery voltage must be over 12 volts.
4. Connect vehicle to the applicable B.U.D.S. software version and select the following:
   - **Read Data** button
   - **Activation** page tab
   - **ECM** page tab
   - Fuel pump **Disabled**.

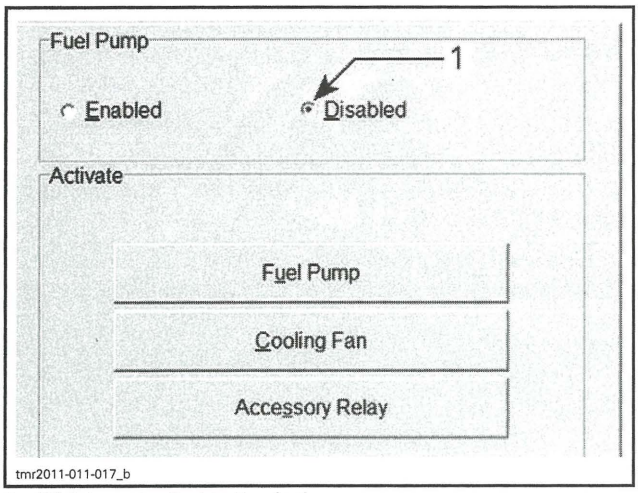

1. Click here to disable the fuel pump

5. Release fuel pressure by running engine until it runs out of gas.
6. Remove the following items, refer to the *BODY* subsection.
   - Passenger seat
   - Fuel tank cover
   - RH lateral console panel.
7. Carefully disconnect the fuel pump outlet hose by pressing on the release tab of the quick disconnect fitting.
8. Install fuel PRESSURE GAUGE (P/N 529 035 709) and FUEL HOSE ADAPTER (P/N 529 036 023) between disconnected hose and fuel rail (in-line installation).

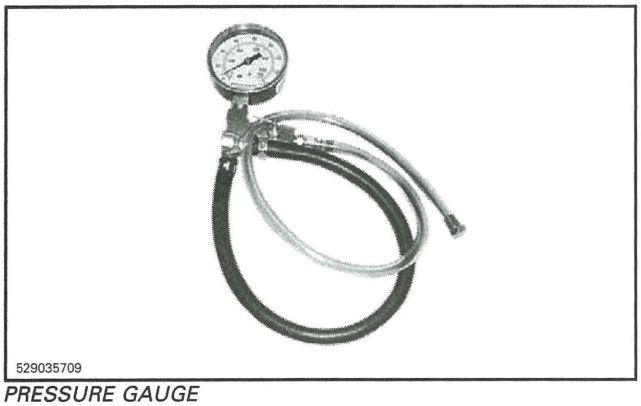

PRESSURE GAUGE

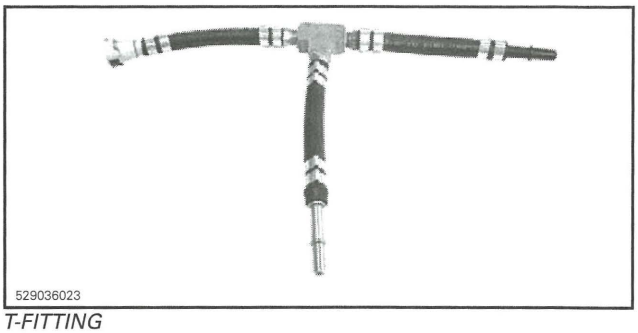

T-FITTING

9. Using B.U.D.S., reactivate fuel pump by selecting **Enabled**.

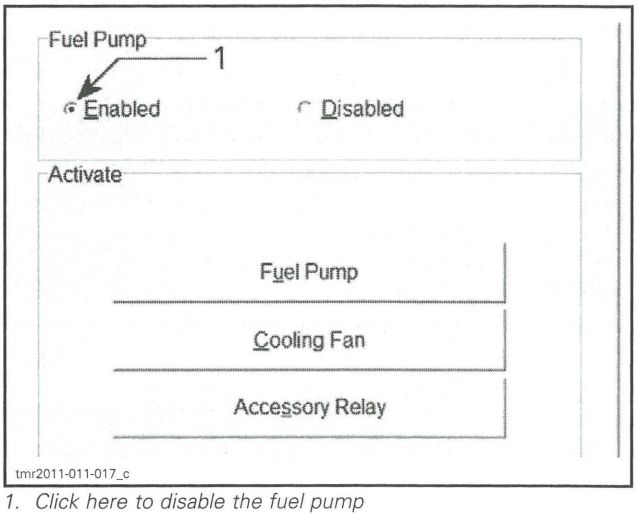

1. Click here to disable the fuel pump

10. Turn ignition key ON and observe fuel pressure.

FUEL PRESSURE	350 kPa ± 10 kPa (51 PSI ± 1 PSI)

NOTE: Valid at 12 V ± 0.1 V.

11. Start engine and observe fuel pressure.
12. Stop engine.
13. In B.U.D.S., select the fuel pump **Disabled** function.
14. Release fuel pressure by running engine until it runs out of gas.
15. Remove tool and connect hose on fuel rail.

Test Conclusion

The fuel pressure should be within specification in static or dynamic tests.

A rapid pressure drop after the engine is stopped indicates leakage either from a fuel hose, fuel rail, or from the fuel pump check valve.

- Check fuel hoses, fuel rail and fittings for leaks. If not leaking, replace fuel pump.

A slow pressure drop after the engine is stopped indicates leakage either from a fuel injector or from the fuel pressure regulator.

– Check fuel injectors for leaks. If not leaking, replace fuel pump.

TROUBLESHOOTING

FUEL SYSTEM DIAGNOSTIC FLOW CHART

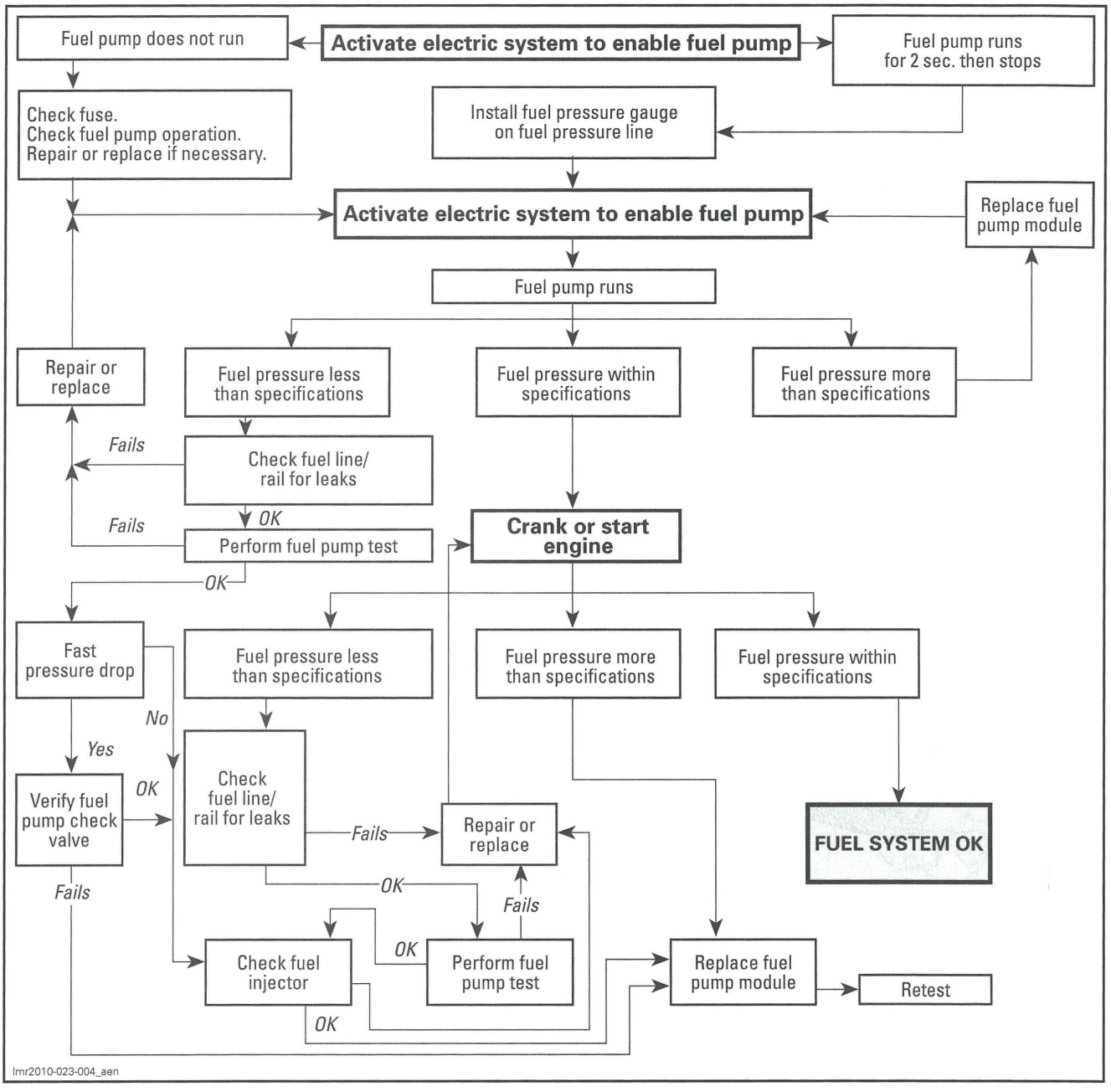

PROCEDURES

FUEL HOSE AND OETIKER CLAMPS

Fuel Hose Replacement

When replacing fuel hoses, be sure to use hoses and clamps as available from BRP parts department. This will ensure continued proper and safe operation.

⚠ WARNING

Use of fuel lines other than those recommended by BRP may compromise fuel system integrity.

⚠ WARNING

Whenever removing a hose in the fuel system, always use new Oetiker clamps at assembly. Then validate fuel system tightness by performing a fuel pressure test.

Oetiker Clamp Replacement

To secure or cut Oetiker clamps on fuel lines, use OETIKER PLIERS (P/N 295 000 070).

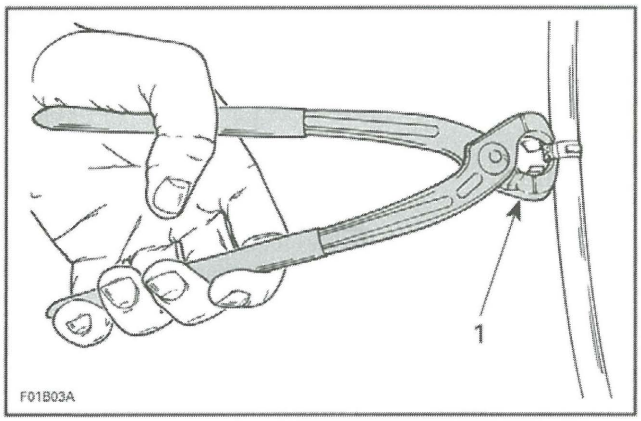

1. Cutting clamp

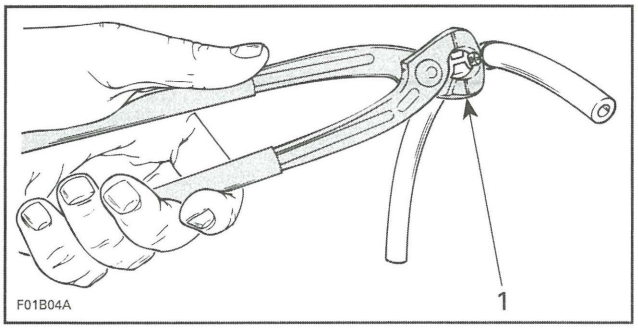

1. Securing clamp

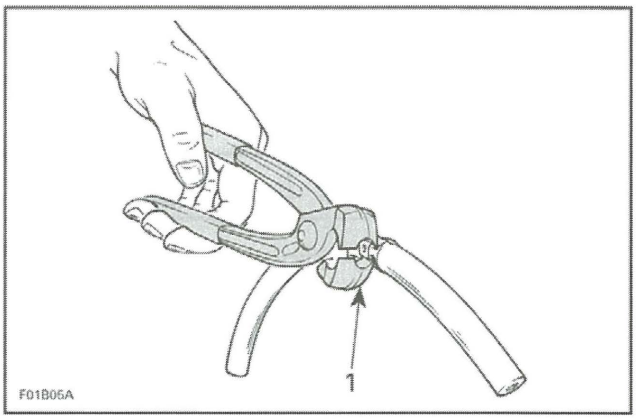

1. Securing clamp in limited access

FUEL TANK

Fuel Tank Draining

Remove fuel tank cap and siphon gas into an approved fuel container.

Fuel Tank Removal

1. Drain fuel tank. Refer to *FUEL TANK DRAINING* above in this subsection.
2. Connect the vehicle to the applicable B.U.D.S. software version.
3. In B.U.D.S., select the following to disable the fuel pump:
   - **Read Data** button
   - **Activation** page tab
   - **ECM** page tab
   - Fuel pump **Disabled**.

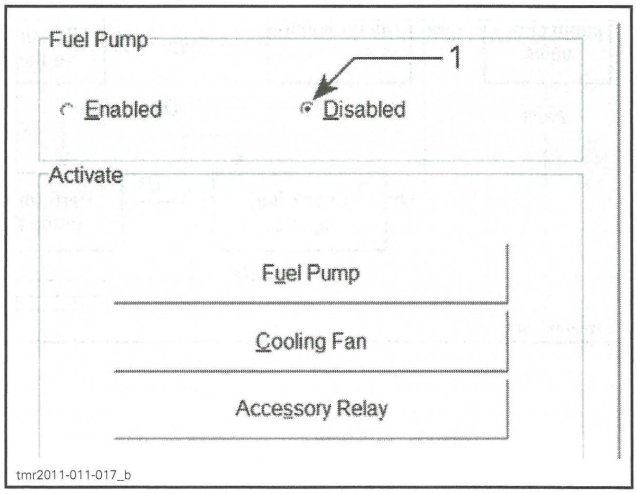

1. Click here to disable the fuel pump

4. Release fuel pressure by running engine until it runs out of gas.
5. Disconnect battery, refer to *CHARGING SYSTEM* subsection.

6. Remove RH passenger seat, refer to the *BODY* subsection.
7. Refer to *BODY* subsection and remove the body parts indicated in the following illustration.

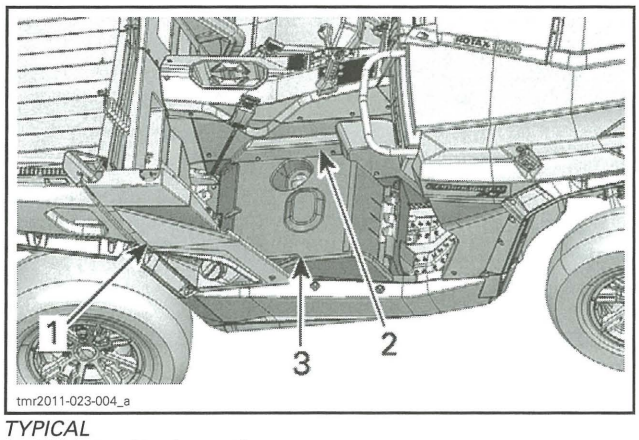

TYPICAL
1. *RH Lateral body panel*
2. *RH side panel on the console*
3. *Fuel tank cover panel*

8. Disconnect the fuel pump connector.
9. Remove the vent hose from the fuel tank valve.
10. Disconnect the high pressure fuel hose at the fuel injectors.

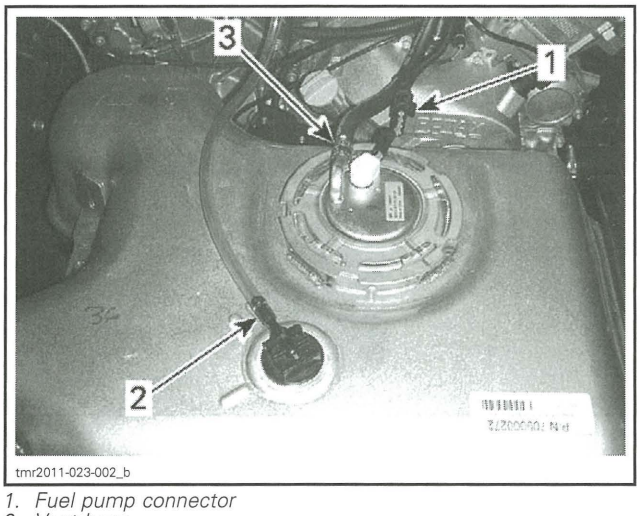

1. *Fuel pump connector*
2. *Vent hose*
3. *High pressure fuel hose*

11. Remove fuel tank retaining screws (2).

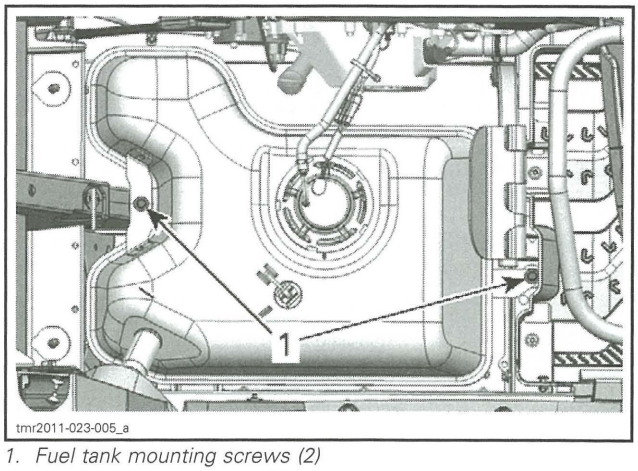

1. *Fuel tank mounting screws (2)*

12. Pull fuel tank out from the RH side of vehicle.

Fuel Tank Inspection

Inspect fuel tank for any damages or cracks which may result in fuel leaks.

Inspect tank and protector attachment points for damages.

Inspect protector for damages.

If cracks, gouges or other damages which may lead to a fuel leak, or damages to attachment points that could prevent the tank from being secure are found, replace fuel tank.

Fuel Tank Installation

The installation is the reverse of the removal procedure. However, pay attention to the following.

Be sure to reinstall the 2 rubber washers between the fuel tank and the frame.

NOTE: Verify the 3 rubber pads located under the fuel tank are properly fixed to the fuel tank. If pad is missing, install a new one.

Be sure to properly connect and route:
- Fuel tank vent tube
- Fuel pump pressure hose
- Electrical connector.

Using B.U.D.S., reactivate fuel pump by selecting **Enabled**.

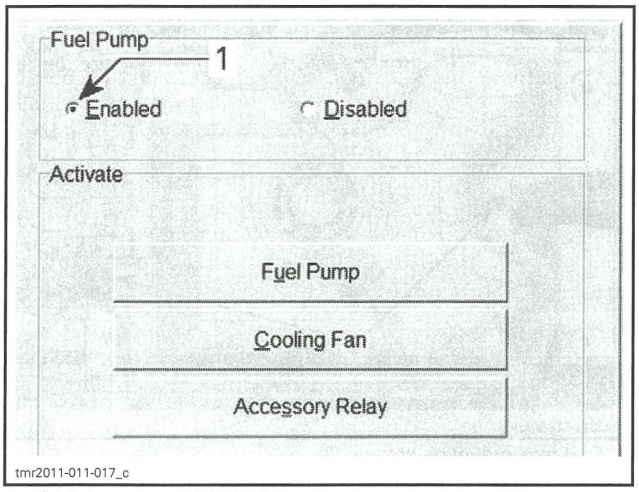

1. Click here to enable fuel pump

Refuel tank and ensure there are no leaks by performing a *FUEL TANK LEAK TEST* and a *FUEL PRESSURE TEST* as described in this subsection.

FUEL PUMP

Fuel Pump Pressure Test

Refer to *INSPECTION* in this subsection.

Fuel Pump Quick Test

1. Turn ignition key to ON.
2. Listen for fuel pump operation.
3. Fuel pump should come ON for a few seconds, then stop.

If fuel pump does operate as in previous steps, carry out the following:

- Check fuel pump fuse.
- Check in B.U.D.S. for applicable fault codes. Refer to *COMMUNICATION TOOLS AND B.U.D.S.* subsection.
- Carry out a fuel pump input voltage test.

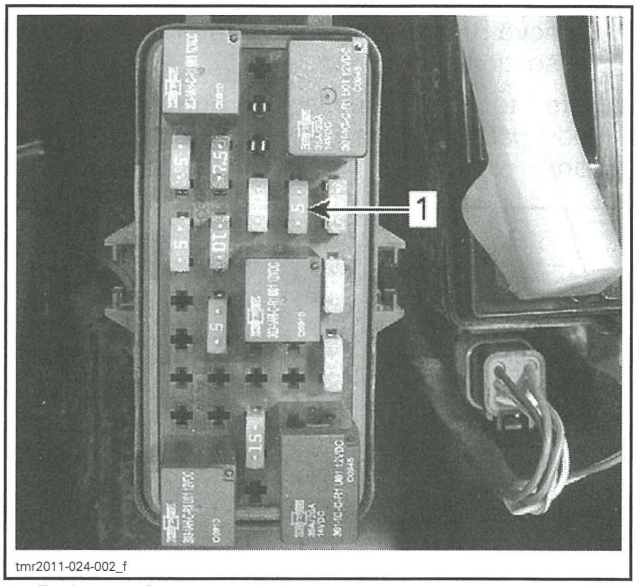

1. Fuel pump fuse

Fuel Pump Input Voltage Test

1. Remove RH passenger seat and fuel tank cover, refer to *BODY* subsection.

Disconnect the fuel pump connector.

2. Use the FLUKE 115 MULTIMETER (P/N 529 035 868) with the FLUKE RIGID BACK PROBE (P/N TP88).

Set multimeter to Vdc.

FLUKE 115 MULTIMETER

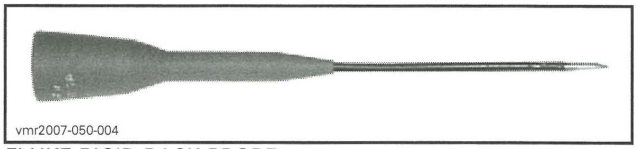

FLUKE RIGID BACK PROBE

3. Set multimeter to Vdc.
4. Turn ignition key ON.
5. Read voltage as follows.

FUEL PUMP INPUT VOLTAGE TEST		
TEST PROBES		VOLTAGE READING
Fuel pump connector Pin 3	Fuel pump connector Pin 4	Battery voltage

If battery voltage is read, carry out a fuel pump resistance test.

If battery voltage is not read, test fuel pump power input as follows.

FUEL PUMP POWER WIRE TEST		
TEST PROBES		VOLTAGE READING
Fuel pump connector Pin 3	Battery ground	Battery voltage

If battery voltage is now read, check fuel pump ground circuit between fuel pump connector 5-FP-4 and ECM connector 3-B-M1.

If battery voltage is still not read, check fuel pump:
- Fuse (F15)
- Power circuit
- Wiring and connectors.

Fuel Pump Resistance Test

1. Remove the fuel pump fuse.
2. Remove connector B from the ECM and connect it to the ECM ADAPTER TOOL (P/N 529 036 166).

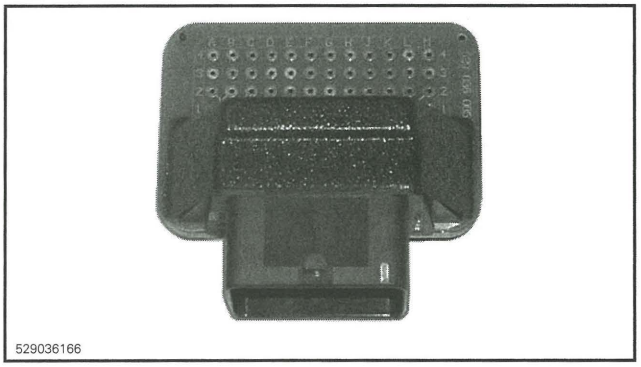

3. Set multimeter to Ω.
4. Measure fuel pump resistance as follows.

FUEL PUMP RESISTANCE TEST (AT ECM AND FUSE)		
TEST PROBES		RESISTANCE Ω @ 20°C (68°F)
Fuse box contact 5D	ECM B-M1	Approximately 2 Ω

If resistance test failed, disconnect fuel pump connector and measure resistance at fuel pump connector.

FUEL PUMP RESISTANCE TEST (AT FUEL PUMP CONNECTOR)	
Pins 1 and 2	Approximately 2 Ω

If test failed at pump connector, replace fuel pump.

If test succeeded at pump connector, check wiring and connectors from fuse box to ECM connector. Repair or replace as necessary.

Fuel Pump Removal

1. Using B.U.D.S., select the following to disable the fuel pump:
   - **Read Data** button
   - **Activation** page tab
   - **ECM** page tab
   - Fuel pump **Disabled**.

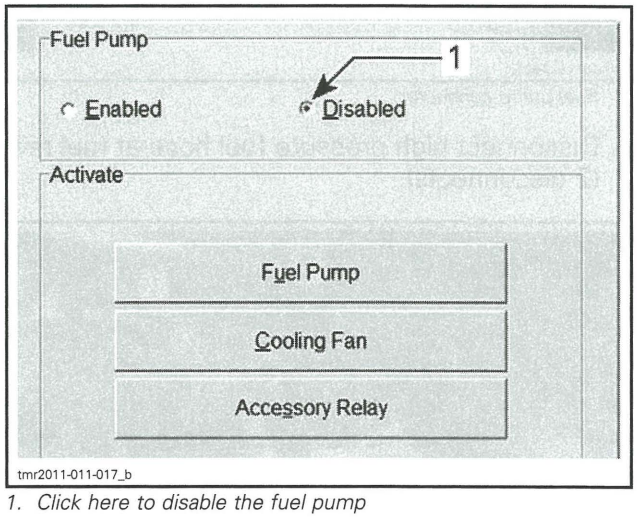

1. Click here to disable the fuel pump

2. Release fuel pressure by running engine until it runs out of gas.
3. Refer to *BODY* subsection and remove the body parts indicated in the following illustration.

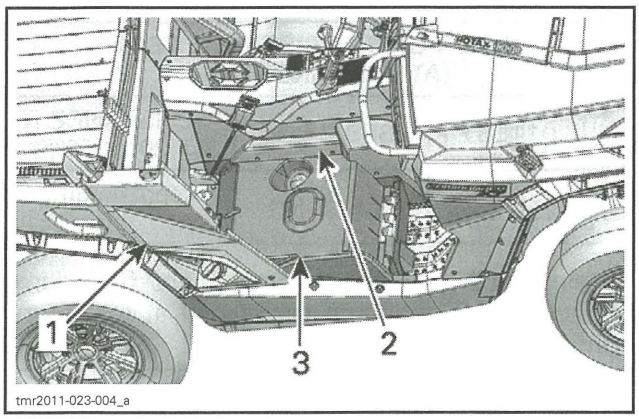

tmr2011-023-004_a

TYPICAL
1. *RH Lateral body panel*
2. *RH side panel on the console*
3. *Fuel tank cover panel*

4. Disconnect fuel pump electric connector.

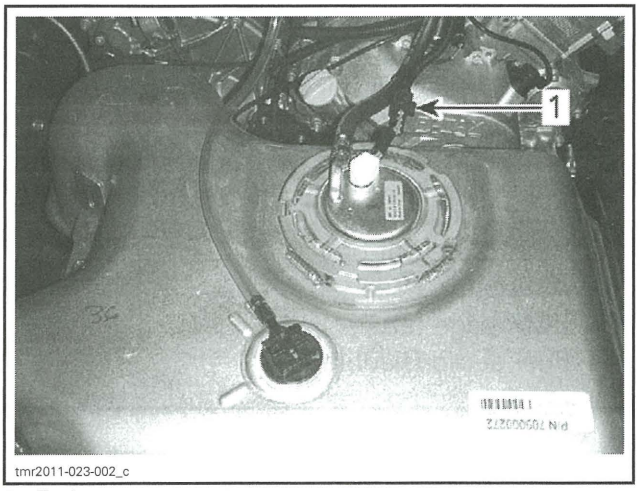

tmr2011-023-002_c

1. *Fuel pump connector*

5. Disconnect high pressure fuel hose at fuel rails (2 disconnects).

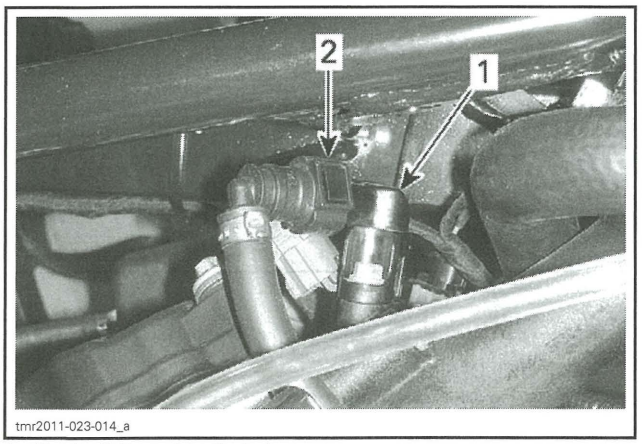

tmr2011-023-014_a

1. *Fuel rail (1 each cylinder)*
2. *High pressure fuel hose disconnect ((1 each cylinder)*

6. Using a soft face hammer and a brass drift in the notched portion of the locking ring, remove fuel pump locking ring.

⚠ WARNING

Fuel vapors are flammable and explosive under certain conditions. Use only non-sparking tools.

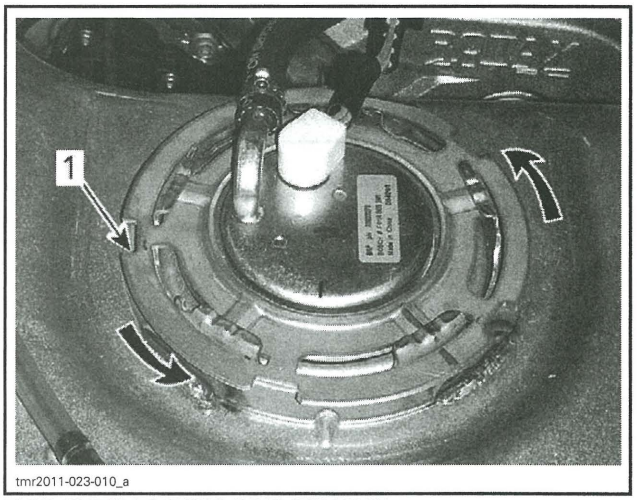

tmr2011-023-010_a

FUEL PUMP LOCKING RING REMOVAL
1. *Notch in fuel pump locking ring*

7. Carefully pull out fuel pump.

⚠ CAUTION **While pulling out the fuel pump, pay attention to fuel sender float arm. Float arm can get stuck and bend reducing fuel sender accuracy.**

8. Discard gasket ring.

Fuel Pump Installation

For installation, reverse the removal procedure. However, pay attention to the following.

⚠ CAUTION **Manipulate fuel pump with care.**

1. Install a **NEW** gasket ring.
2. Place gasket so that it is located between pump and tank mounting surface.

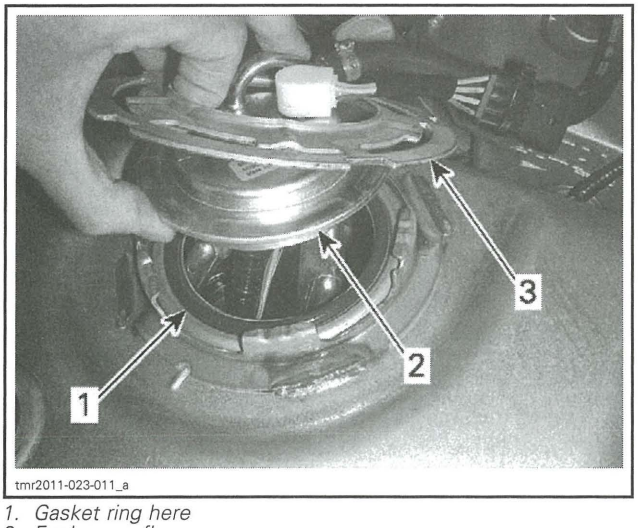

1. Gasket ring here
2. Fuel pump flange
3. Pump locking ring

3. Pay attention to pump orientation as in following illustration.

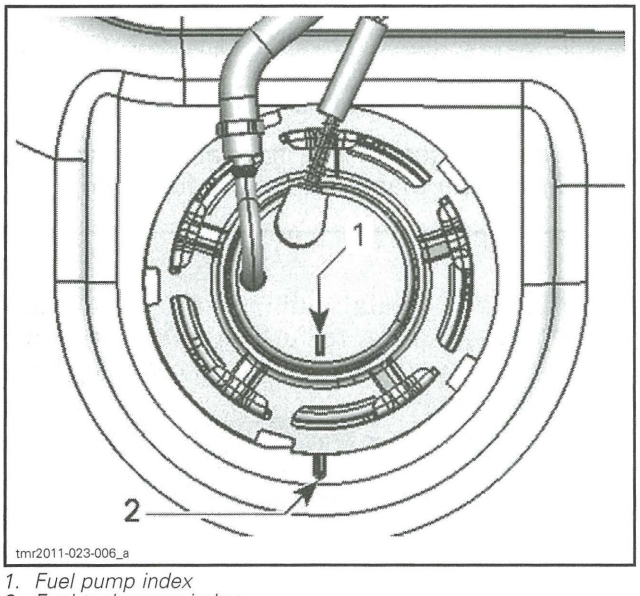

1. Fuel pump index
2. Fuel tank pump index

4. Insert fuel pump locking ring over the fuel pressure hose and electrical wiring connector.
5. While firmly holding pump against tank, engage fuel pump locking ring on fuel tank flange.
6. Using a soft face hammer and a brass drift in the notched portion of the locking ring, turn locking ring until it is fully engaged.

⚠ WARNING

Fuel vapors are flammable and explosive under certain conditions. Use only non-sparking tools. Ensure pump locking ring is fully engaged.

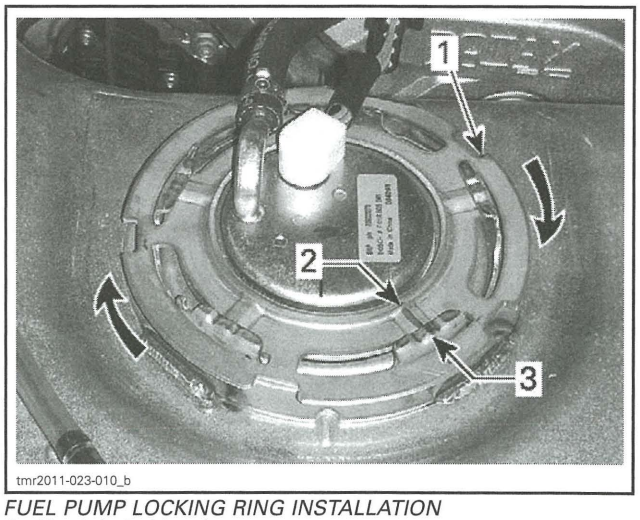

FUEL PUMP LOCKING RING INSTALLATION
1. Notch in locking ring
2. Raised portion in locking ring (5 places)
3. Lock position on tank flange (5 places)

7. Using B.U.D.S., enable the fuel pump.

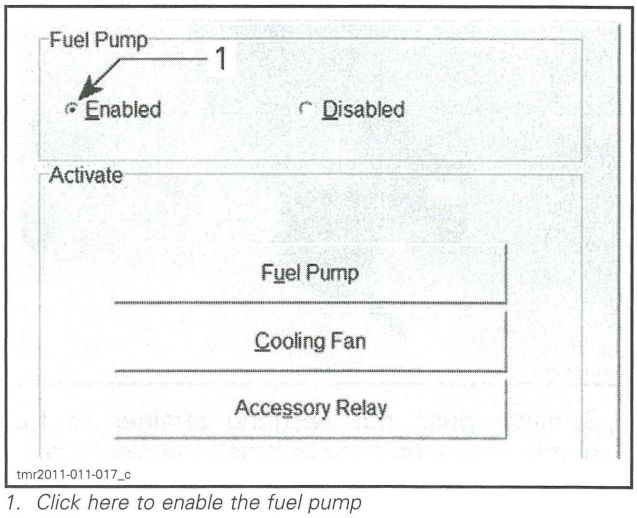

1. Click here to enable the fuel pump

8. Refuel tank and ensure there are no leaks by performing a *FUEL TANK LEAK TEST* and a *FUEL PRESSURE TEST* as described in this subsection.
9. Check fuel level sender operation.

Fuel Pump Strainer Replacement

1. Remove *FUEL PUMP*, see *FUEL PUMP REMOVAL* procedure in this subsection.
2. Unlock 3 tabs on plastic ring.

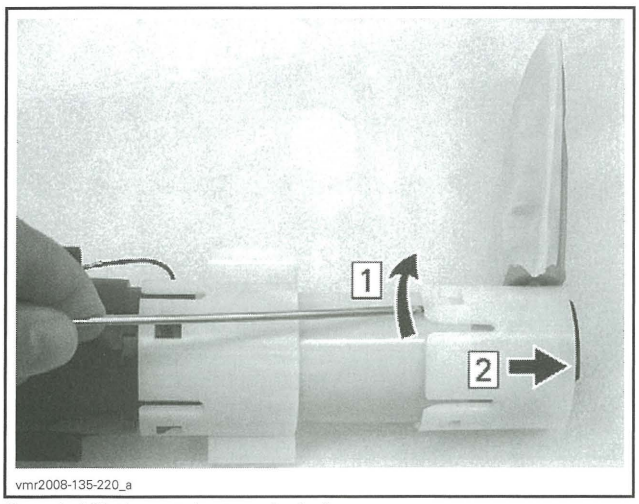

Step 1: Lift these tabs to unlock ring
Step 2: Pull ring off pump inlet

3. Remove rubber pad.

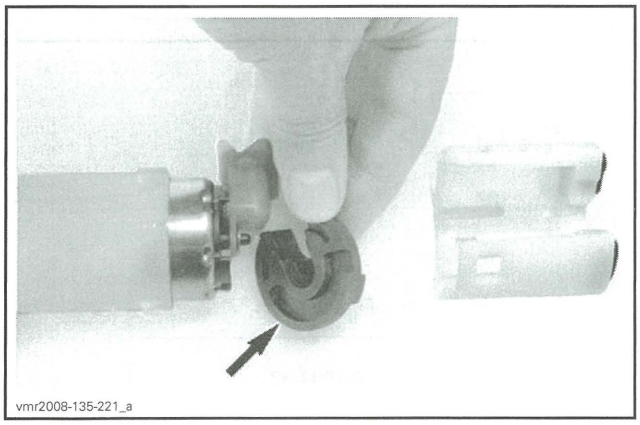

4. Remove push nut securing strainer to fuel pump. Be careful not to break the plastic pin.

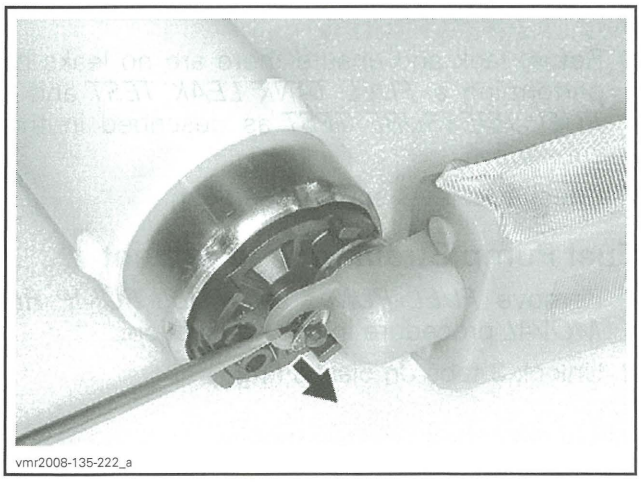

5. Pull strainer off fuel pump.

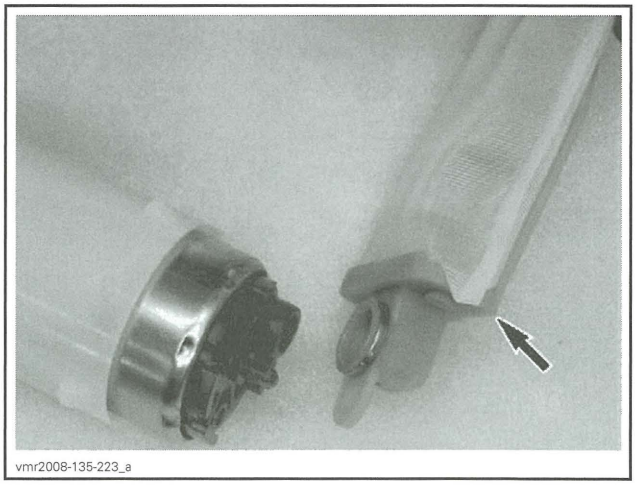

NOTE: A non serviceable filter is located in fuel pump. If it is clogged, replace fuel pump.

6. Insert the new strainer on fuel pump making sure to press it in tightly against pump face.
7. Press in a NEW push nut to secure strainer.
8. Reinstall remaining removed parts.

FUEL LEVEL SENDER

The fuel level sender is a float actuated variable resistance type that is part of the fuel pump.

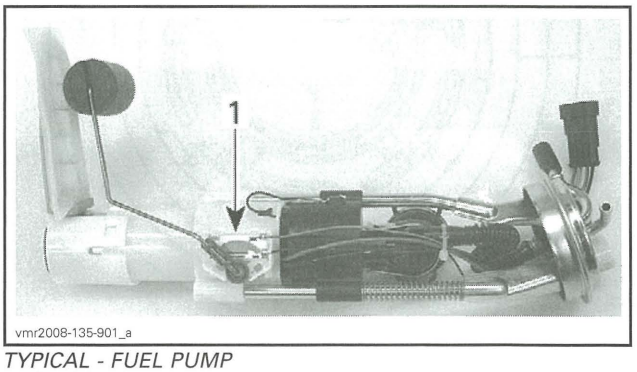

TYPICAL - FUEL PUMP
1. Fuel level sender

Fuel Level Sender Resistance Test

1. Remove and disconnect multifunction gauge, refer to the *LIGHTS/GAUGE/ACCESSORIES* subsection.
2. Use a multimeter and select Ω.
3. Measure the resistance of the sender as follows.

FUEL LEVEL SENDER RESISTANCE TEST		
FUEL LEVEL	GAUGE CONNECTOR	RESISTANCE Ω @ 20°C (68°F)
Full	Pins 4 and 21	5 Ω ± 1
Empty		100 Ω ± 5

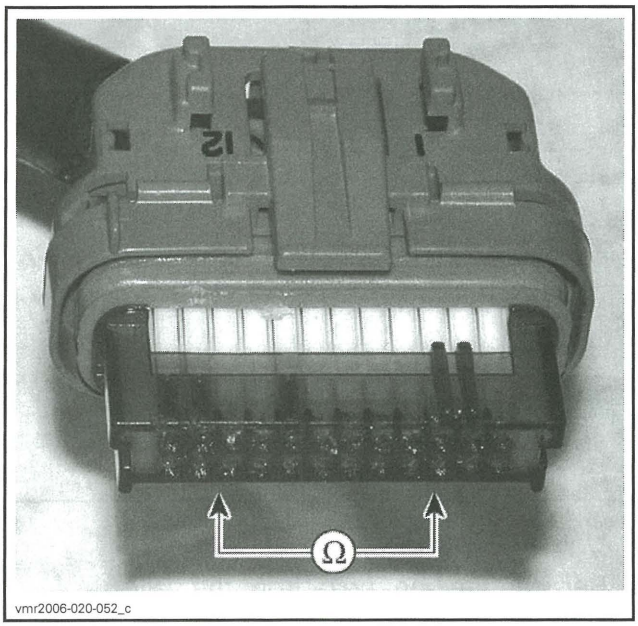

vmr2006-020-052_c

If readings are out of specification, repeat test at fuel pump connector. If resistance test at fuel pump connector is not good, replace fuel level sender.

If readings are as specified, carry out a *FUEL LEVEL SENDER INPUT VOLTAGE TEST.*

Fuel Level Sender Input Voltage Test

1. Set ignition switch to ON.
2. Disconnect fuel pump connector.
3. Use a multimeter and select Vdc.
4. Measure the input voltage as follows.

FUEL LEVEL SENDER INPUT VOLTAGE TEST		
FUEL PUMP CONNECTOR	BATTERY	VOLTAGE
Pin 1	Negative terminal	Battery voltage

If battery voltage is not read, test wiring continuity between sender and multifunction gauge.

If wiring continuity is good, replace multifunction gauge.

If continuity is not obtained, repair or replace wiring.

Fuel Level Sender Replacement

Replace fuel pump. See fuel pump removal and installation procedures in this subsection.

FUEL TANK VENT VALVE

Fuel Tank Vent Valve Test

Test for Normal Operation

1. Disconnect vent hose from fuel tank vent valve.
2. Connect the VACUUM/PRESSURE PUMP (P/N 529 021 800) and a short piece of hose to the fuel tank vent valve.

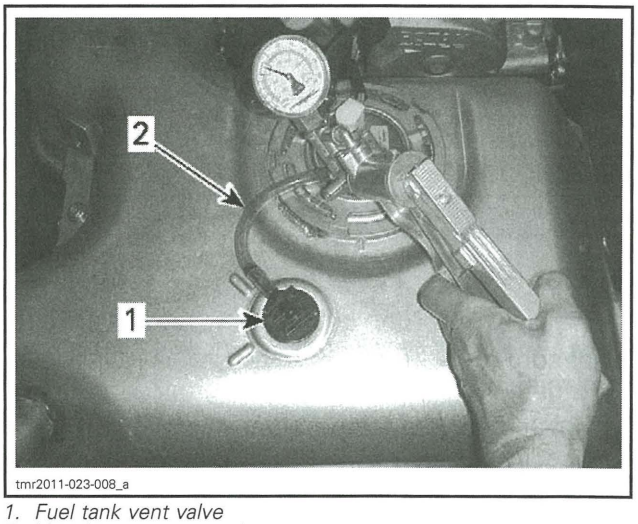

tmr2011-023-008_a

1. Fuel tank vent valve
2. Vent hose to vacuum/pressure pump

3. Remove fuel tank cap.
4. Set vacuum/pressure pump to **PRESSURE** and activate pump. The gauge on the pump **should not change in reading**; air should flow through the vent valve and fuel tank freely.

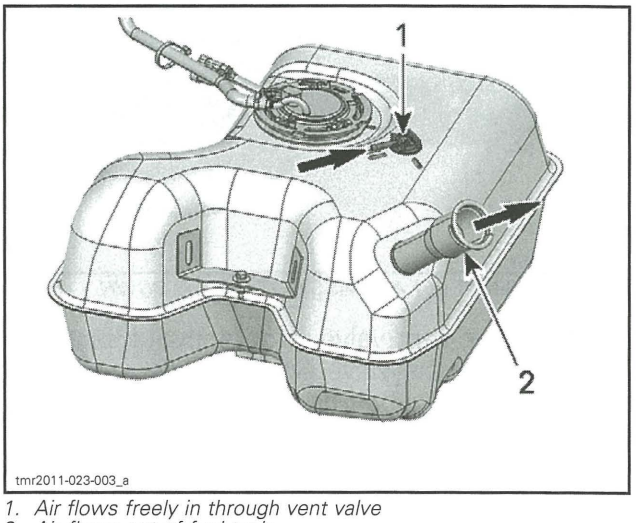

tmr2011-023-003_a

1. Air flows freely in through vent valve
2. Air flows out of fuel tank

5. Set vacuum/pressure pump to **VACUUM** and activate pump. The **gauge should not change in reading**; air should flow through the vent valve and fuel tank freely.

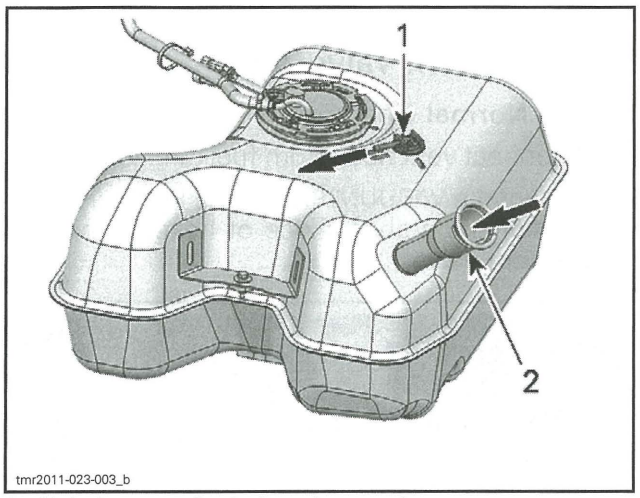

1. Air is drawn out freely through vent valve
2. Air flows in fuel tank

Test for Rollover Protection

1. Remove the fuel tank valve, refer to *FUEL TANK VALVE REMOVAL AND INSTALLATION* in this subsection.
2. Turn the valve upside down.
3. Set vacuum/pressure pump to **VACUUM** and activate pump. The vacuum **gauge reading should increase**; air should **not flow through** the valve.

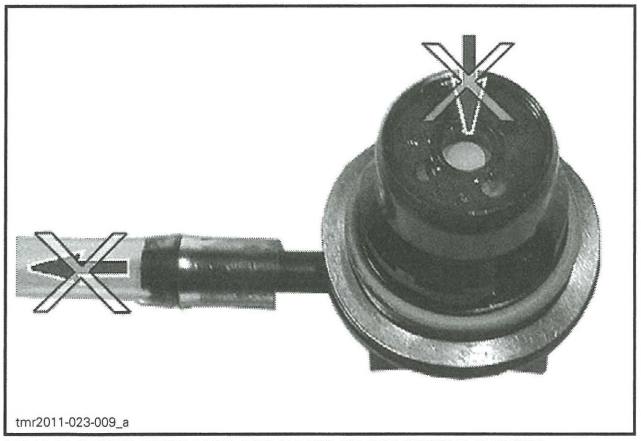

VALVE DOES NOT LET AIR PASS OUT UPSIDE DOWN

The fuel tank vent valve is defective if air flows freely through the valve when upside down and the vacuum indication does not increase on the pump gauge.

Fuel Tank Vent Valve Removal and Installation

1. When removing or installing the fuel tank vent valve, pay attention to the following:
   - Valve lock position index (dual)
   - Valve unlock position index.

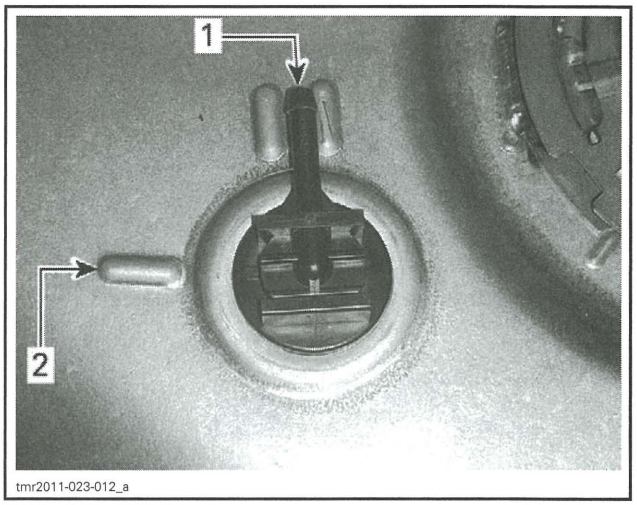

1. Lock position index (dual)
2. Unlock position index

2. Remove the vent hose from the valve.
3. Use an open end wrench of the appropriate size on the rectangular portion of the valve to rotate it to the unlock position for removal.
4. Ensure the wave spring and O-ring seal on the valve to be installed are in good condition.

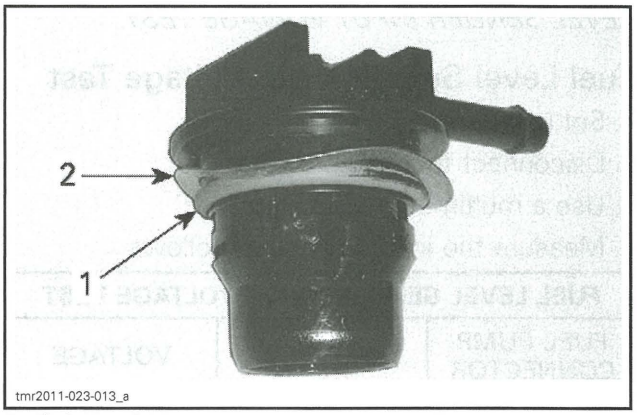

1. O-ring seal
2. Wave spring

5. Insert the valve in the tank.
6. Press down on the valve and rotate it so that its stem rests between the dual valve locking position index (see first illustration).
7. Reconnect the vent hose to the valve stem.

POWER DISTRIBUTION AND GROUNDS

GENERAL

POWER DISTRIBUTION DIAGRAM

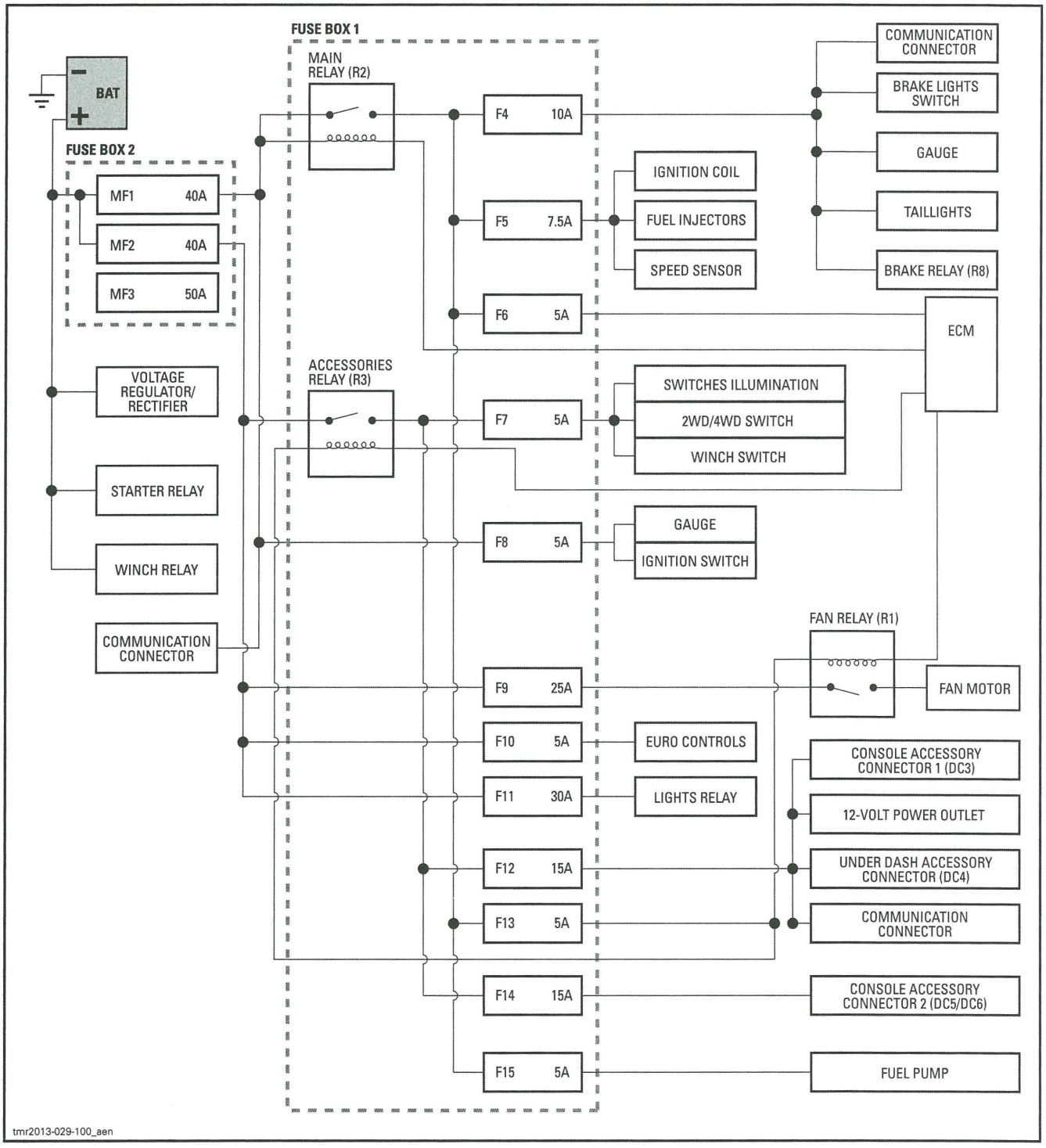

tmr2013-029-100_aen

FUSE BOX 1

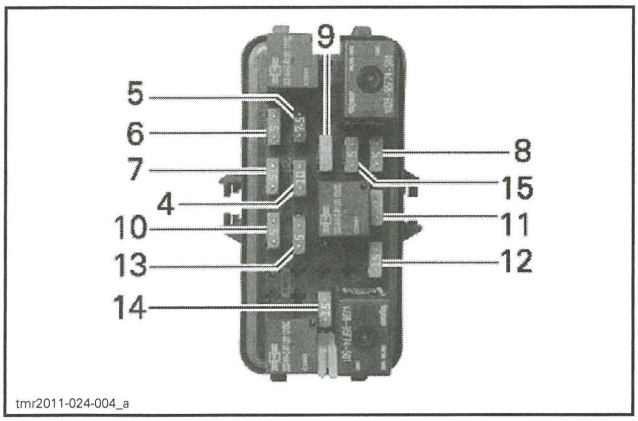

FUSE IDENTIFICATION		
Fuse	4	10 A
	5	7.5 A
	6	5 A
	7	5 A
	8	5 A
	9	25 A
	10	5 A
	11	30 A
	12	15 A
	13	5 A
	14	15 A
	15	5 A

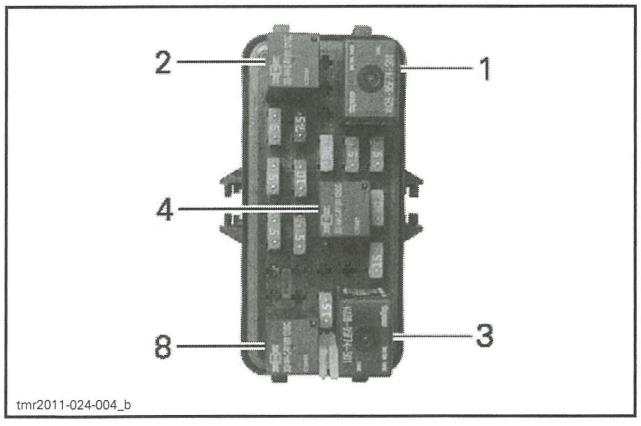

RELAY IDENTIFICATION		
Relays	1	Cooling fan
	2	Main
	3	Accessories
	4	Headlights
	8	Brake lights

FUSE BOX 2

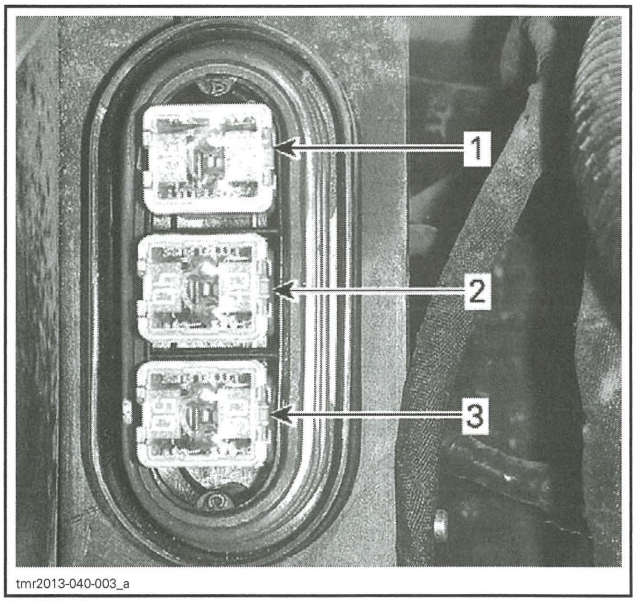

TYPICAL

FUSE IDENTIFICATION			
Fuse	1	Main	40 A
	2	Fan/accessories	40 A
	3	ACS/DPS	50 A

GROUND

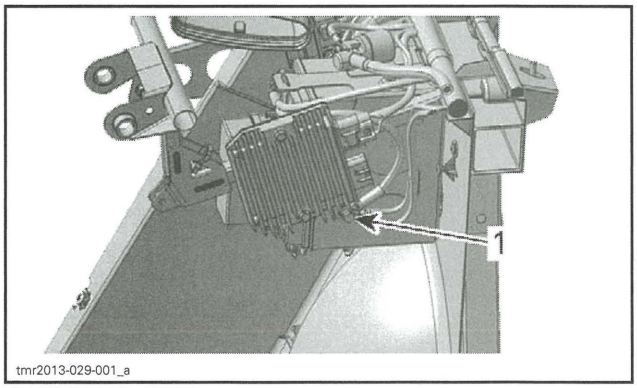

GROUND LOCATION
1. Vehicle ground

WIRING HARNESSES AND CONNECTORS

SERVICE TOOLS

Description	Part Number	Page
CRIMPING TOOL (HEAVY GAUGE WIRE)	529 035 730	293
ECM ADAPTER TOOL	529 036 166	291
ECM TERMINAL REMOVER 2.25	529 036 175	291
ECM TERMINAL REMOVER 3.36	529 036 174	291

SERVICE TOOLS – OTHER SUPPLIER

Description	Part Number	Page
GM TERMINAL EXTRACTOR	12094430	292
SNAP-ON TERMINAL REMOVER TOOL	TT600-4	288

GENERAL

WIRING HARNESS AND SPLICE LOCATION

The wiring harnesses and splice location illustrations are typical. Several variants of the connector types, such as different number of pin cavities, are used on the vehicle. The wiring harnesses and splice location illustrations are stored in the back cover pocket.

PROCEDURES

DEUTSCH CONNECTORS

Deutsch Connector Application

A variety of Deutsch connectors are used on various systems:

- Engine connector
- Magneto connector.

The following procedures may be used on each as they are similar in construction.

Deutsch Connector Removal from its Support

1. Insert a small flat screwdriver between the support and the Deutsch connector.
2. Pry the connector away from the support slightly while sliding it out in the direction shown.

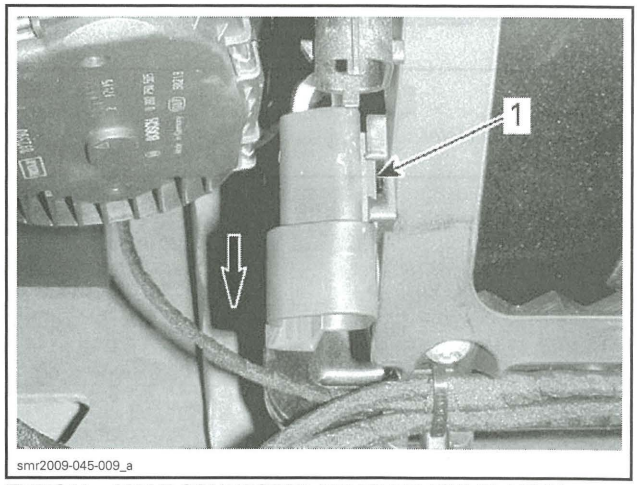

TYPICAL - MALE CONNECTOR REMOVED FOR CLARITY
1. Insert screwdriver here

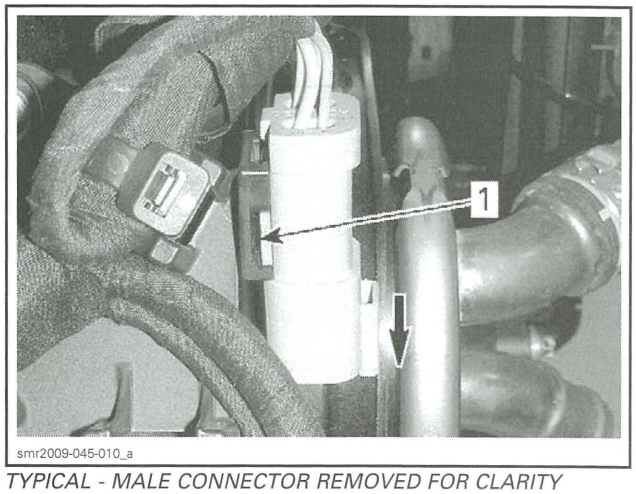

TYPICAL - MALE CONNECTOR REMOVED FOR CLARITY
1. Insert screwdriver here

Deutsch Connector Disconnect

1. To disconnect a Deutsch connector, press the release tab and twist a small flat screwdriver between the male and female housing to disengage and disconnect them.

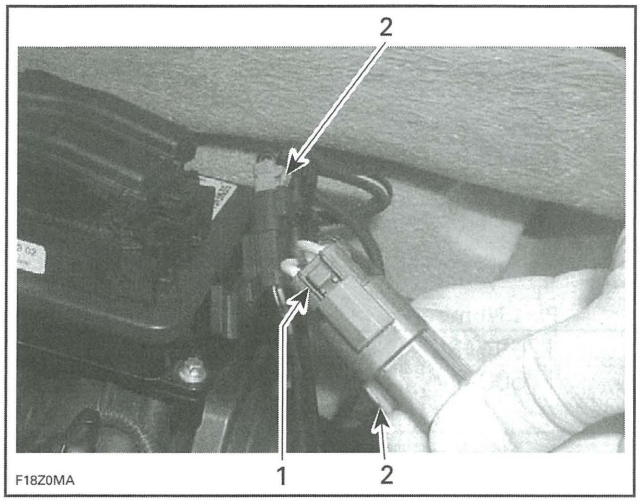

TYPICAL
1. *Release tab*
2. *Deutsch connector*

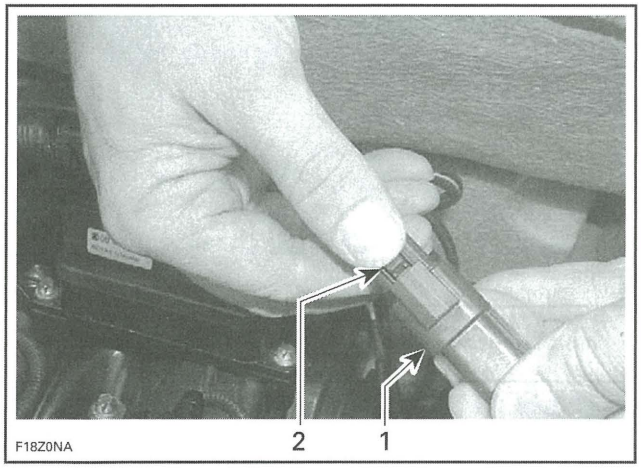

TYPICAL
1. *Deutsch connector*
2. *Press release button*

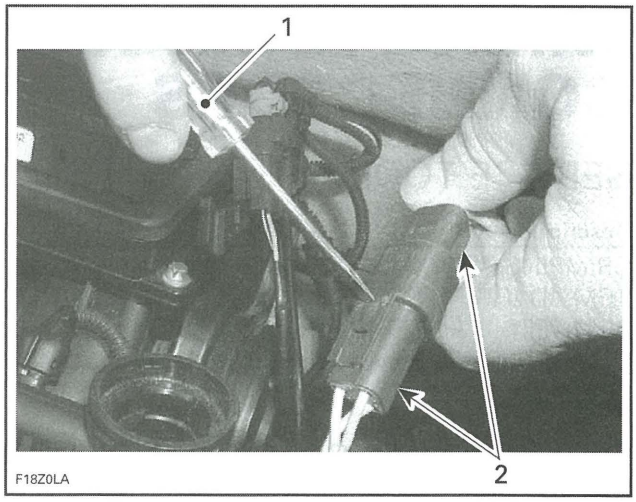

TYPICAL
1. *Flat screwdriver*
2. *Deutsch connector*

Deutsch Connector Disassembly and Reassembly

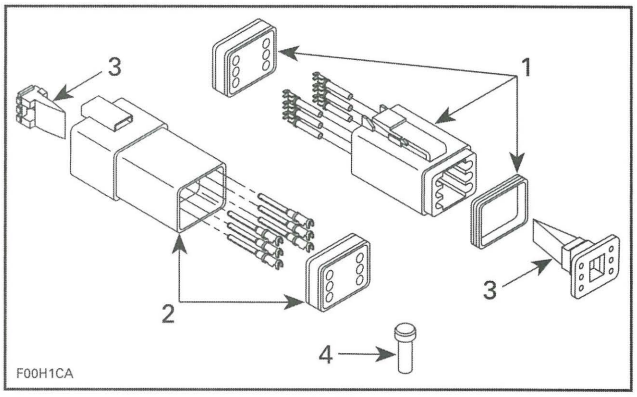

TYPICAL - DEUTSCH CONNECTOR
1. *Male connector*
2. *Female connector*
3. *Secondary lock*
4. *Sealing cap*

NOTICE **Do not apply dielectric grease on terminal inside connector.**

Terminal Removal

To remove terminals from connector, proceed as follows:

1. Using long nose pliers, pull out the secondary plastic lock from between the terminals.

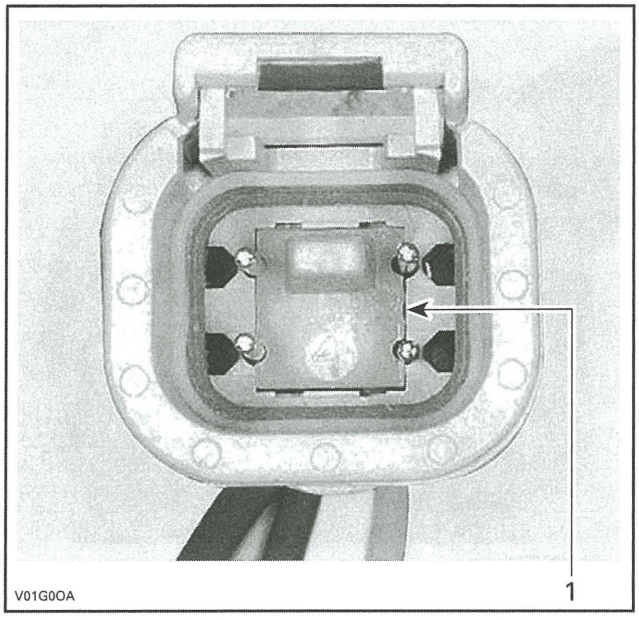

FEMALE CONNECTOR
1. Female lock

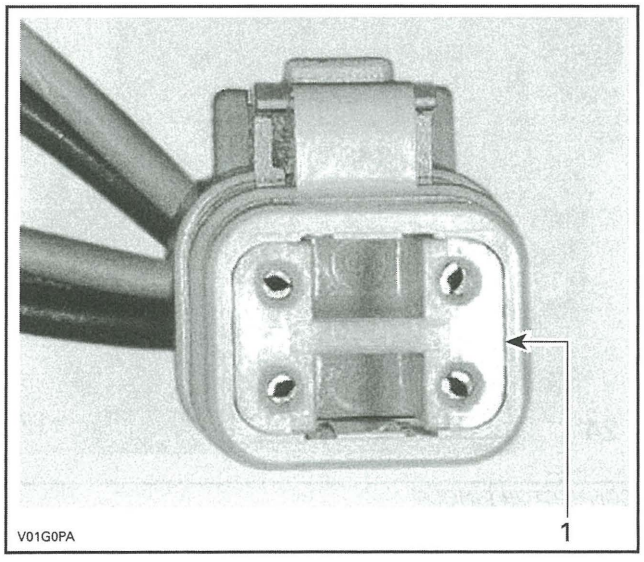

MALE CONNECTOR
1. Male lock

NOTE: Before pin extraction, push wire forward to relieve pressure on retaining tab.

2. Insert a 4.8 mm (.189 in) wide screwdriver blade inside the front of the terminal cavity.
3. Pry the retaining tab away from the terminal while gently pulling the wire and terminal out of the back of the connector.

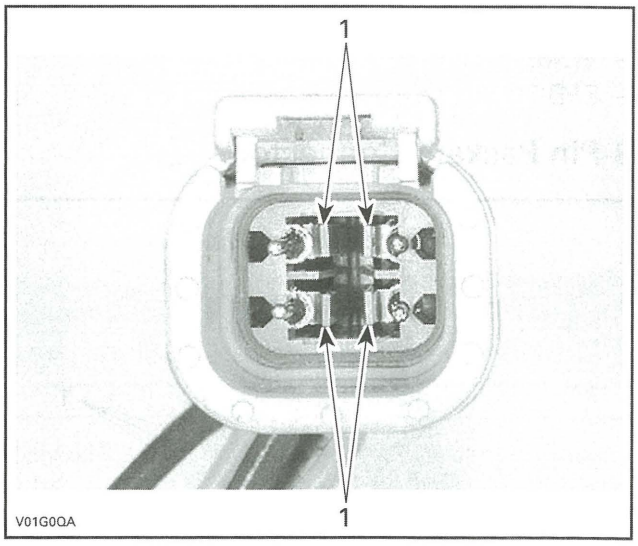

FEMALE CONNECTOR
1. Retaining tab

Terminal Insertion

1. For insertion of a terminal, ensure the secondary plastic lock is removed.
2. Insert terminal through the back of the connector in the appropriate position, and push it in as far as it will go. You should feel or hear the terminal lock engage.
3. Pull back on the terminal wire to be sure the retention fingers are holding the terminal.
4. After all required terminals have been inserted, the lock must be installed.

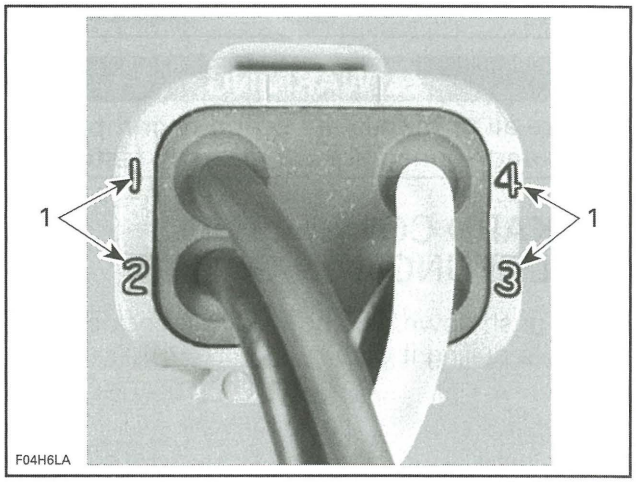

CONNECTOR PIN-OUT
1. Terminal position identification numbers

PACKARD CONNECTORS

Packard Connector Application

Packard connectors are used to connect:

– Electrical harnesses

- Gauges
- VCM
- EFB.

3-Pin Packard Connector

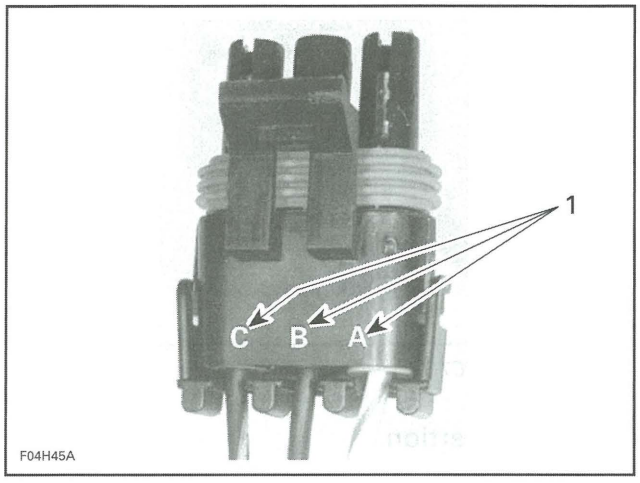

VIEW OF A 3-PIN PACKARD CONNECTOR
1. Identification letters

NOTE: This type of connector also comes in other pin configurations.

To remove a terminal from a 3-pin Packard connector, use the SNAP-ON TERMINAL REMOVER TOOL (P/N TT600-4).

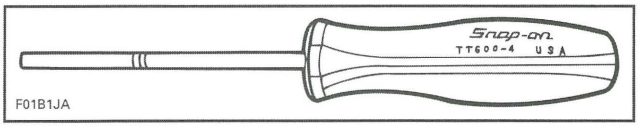

⚠ WARNING

Ensure all terminals are properly crimped on wires and connectors are properly fastened.

PACKARD CONNECTOR (MULTIFUNCTION GAUGE)

Firmly push down tab and hold to unlock connector while pulling it out.

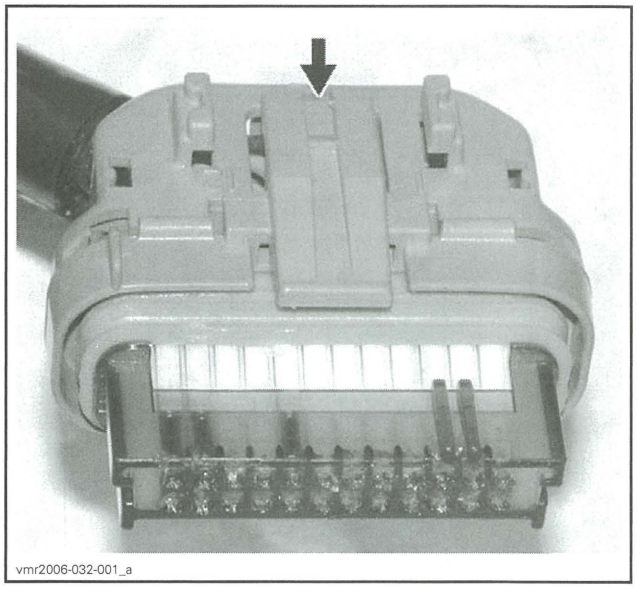

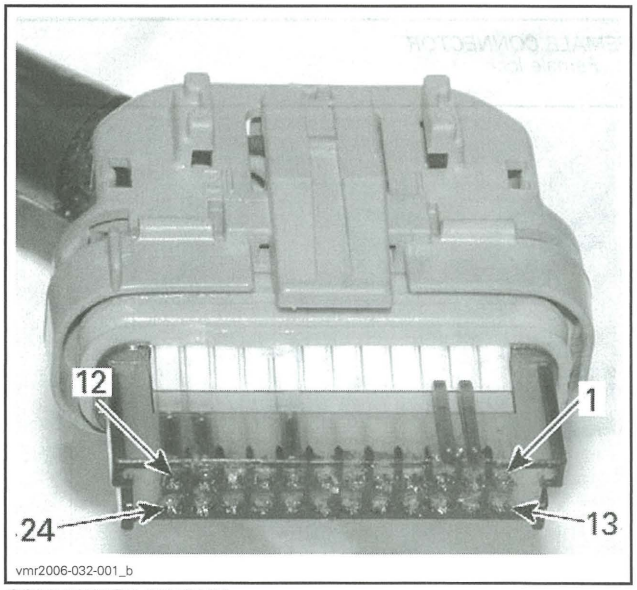

CONNECTOR PINOUT

Push on both tabs to remove retainer.

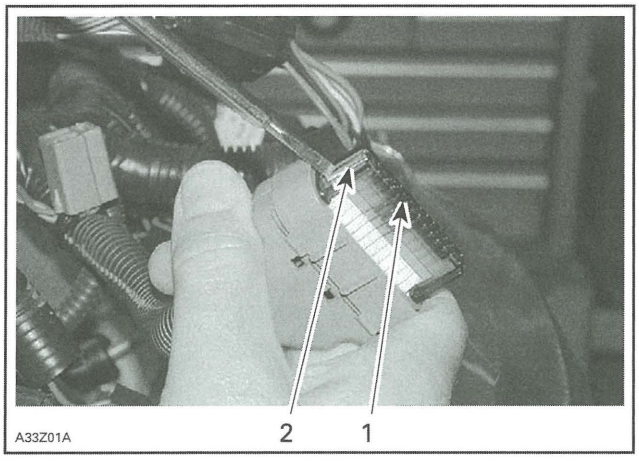

TYPICAL
1. *Retainer*
2. *Tab (one on each side)*

Open housing by lifting 4 tabs.

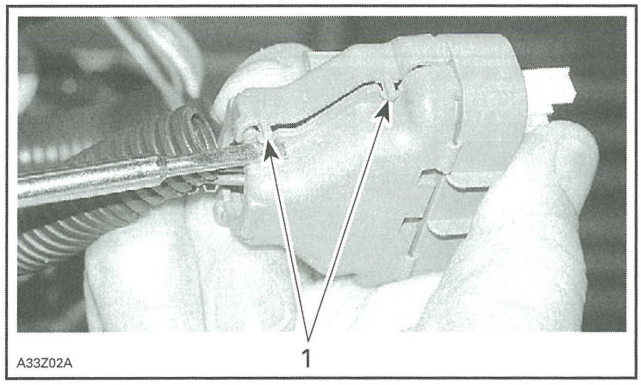

TYPICAL
1. *Tabs (2 on each side)*

Lift the top plastic lock of the female terminal to be removed and hold in position. Lift the female terminal to unlock from the housing and push out of housing.

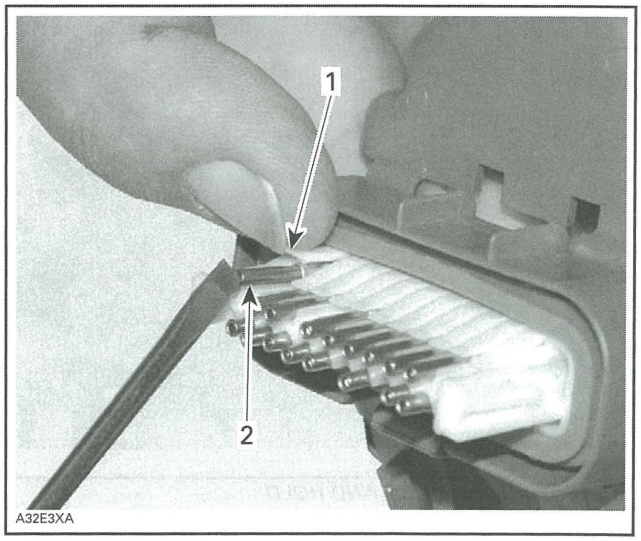

TYPICAL
1. *Lift and hold plastic lock*
2. *Lift to unlock and push out*

MOLEX CONNECTOR

Molex Connector Application

The Molex connector is used on the ECM.

There are 2 MOLEX connectors on the ECM.

The engine wiring harness connector is connected to ECM connector "A". The vehicle wiring harness connector is connected to ECM connector "B".

Each ECM connector has 48 pins.

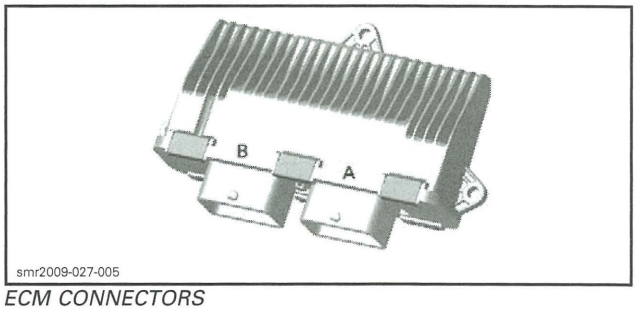

ECM CONNECTORS

Do not apply any product to the pins in the ECM connector.

Connector Removal

1. To access the ECM, refer to *ELECTRONIC FUEL INJECTION* subsection.
2. Press and hold the locking tab on the connector to be disconnected.

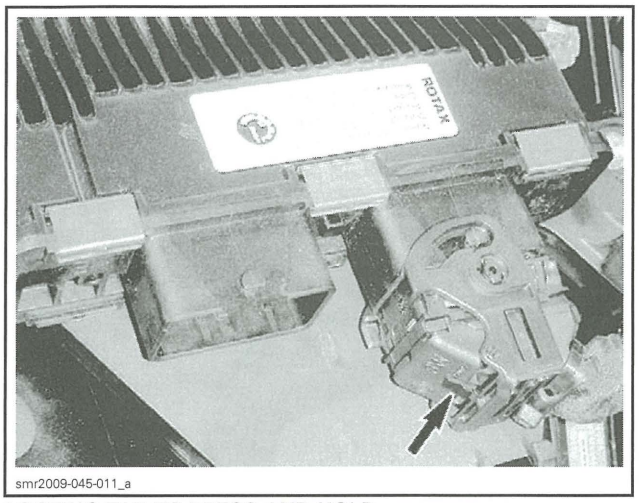

smr2009-045-011_a

LOCKING TAB TO PRESS AND HOLD

3. As you hold the locking tab, rotate the connector locking cam until it stops.

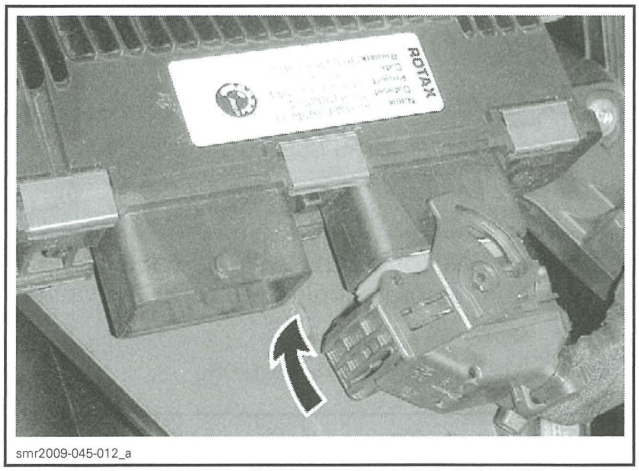

smr2009-045-012_a

CONNECTOR LOCKING CAM ROTATION TO RELEASE

4. Pull connector off ECM.

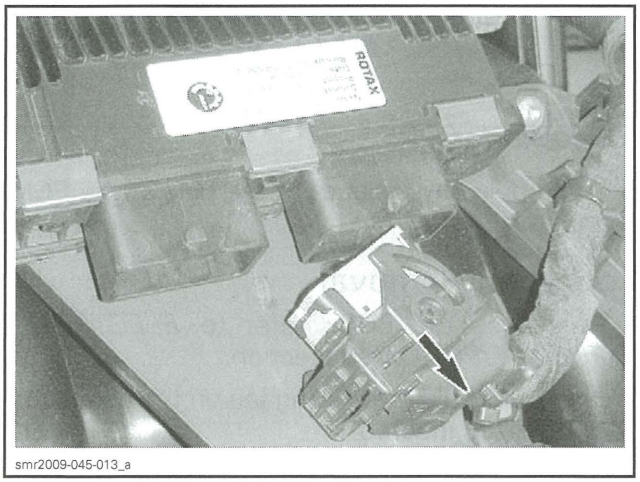

smr2009-045-013_a

Connector Installation

1. Fully open connector locking cam.

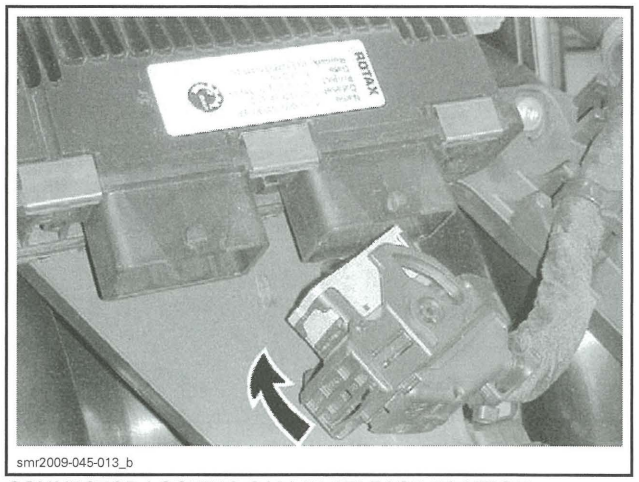

smr2009-045-013_b

CONNECTOR LOCKING CAM IN RELEASE POSITION

2. Insert connector on ECM.
3. As you push the connector onto the ECM, rotate the connector locking cam until it snaps locked.

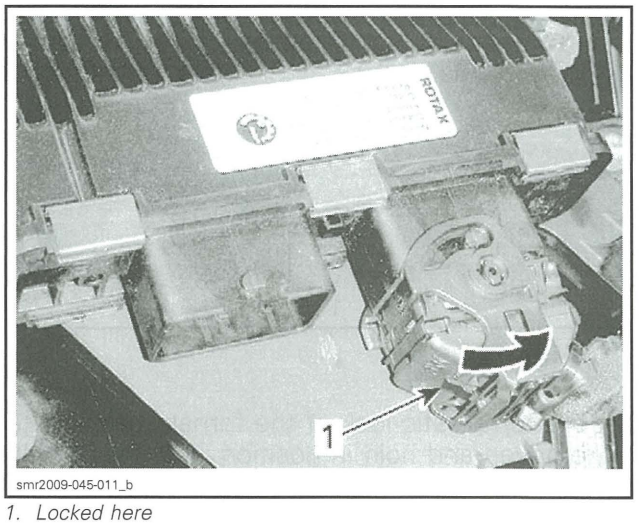

smr2009-045-011_b

1. Locked here

4. Ensure the locking tab is fully out.

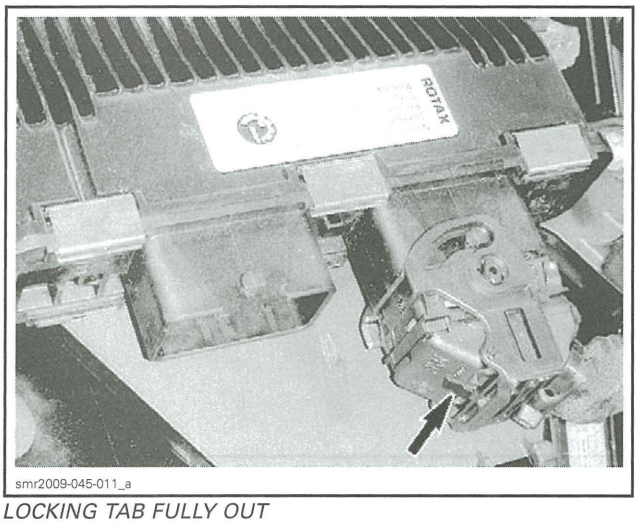

LOCKING TAB FULLY OUT

Connector Inspection

Before replacing an ECM, always check electrical connections.

1. Ensure connector locking mechanism is functioning properly.
2. Ensure all wire terminals (pins) are properly locked in the connector.
3. Ensure they are very tight, make good contact with the pins in the ECM.
4. Ensure the pins in the harness connector and the ECM connector are clean, shiny and corrosion-free.
5. Check wiring harness for signs of scoring.

NOTE: A "defective ECM module" could possibly be repaired simply by disconnecting and reconnecting it.

NOTICE **Do not apply any lubricant product to the pins of the ECM connector.**

Connector Probing

The most recommended and safest method to probe the MOLEX (ECM) connector terminals is to use the ECM ADAPTER TOOL (P/N 529 036 166). This tool will prevent deforming or enlarging of the terminals, which would lead to bad ECM terminal contact creating intermittent or permanent problems.

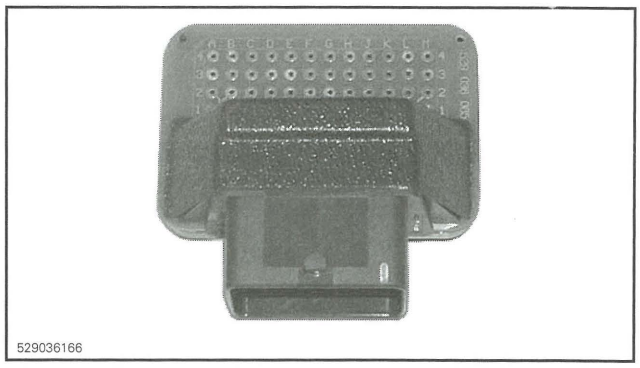

1. Disconnect the ECM connector to be probed, and reconnect it on the ECM adapter.
2. Probe wire terminals of the circuit to be tested directly in the adapter holes.

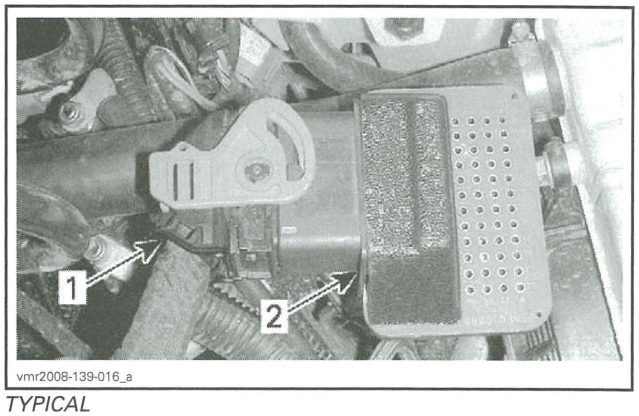

TYPICAL
1. ECM connector
2. ECM adapter

NOTICE **Never probe directly on the ECM harness connector. This could change the shape or enlarge the terminals and create intermittent or permanent contact problems.**

Connector Terminal Removal (Harness Connector)

To remove a signal terminal from the ECM harness connector, use the ECM TERMINAL REMOVER 2.25 (P/N 529 036 175).

To remove a power terminal, use the ECM TERMINAL REMOVER 3.36 (P/N 529 036 174).

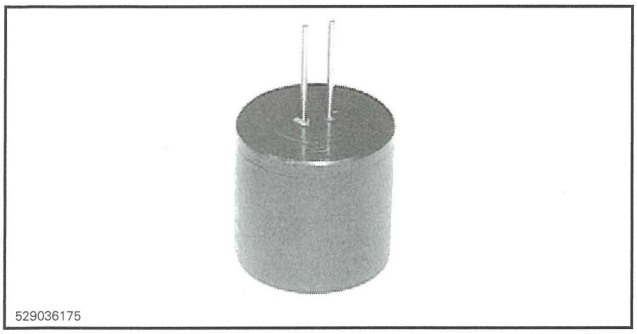
529036175

1. Remove rear protector from connector.
2. Pull out the connector lock.

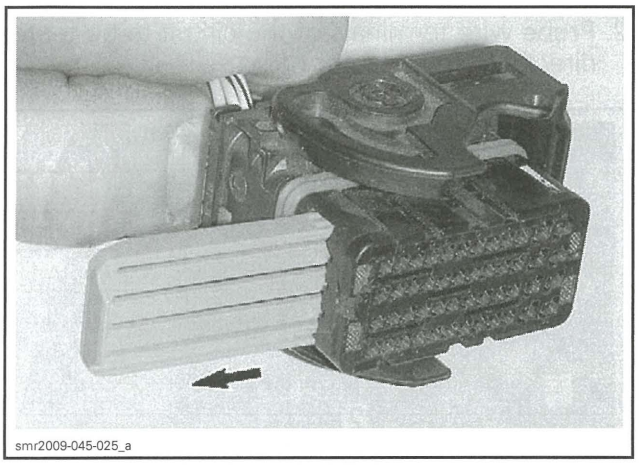
smr2009-045-025_a

3. Insert tool to unlock terminal.

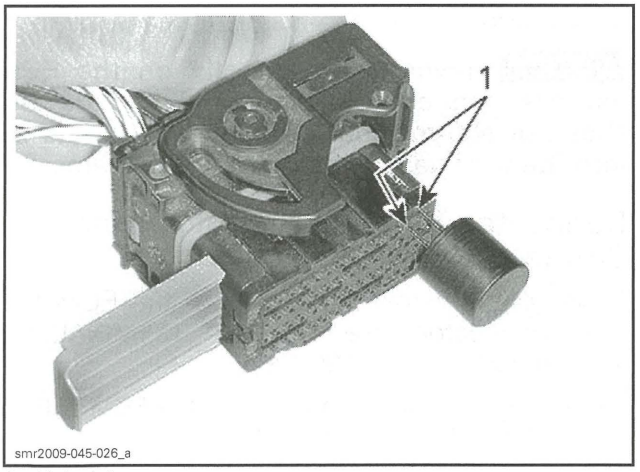

smr2009-045-026_a

1. Unlock here

4. Gently pull on the wire to extract the terminal out the back of the connector.

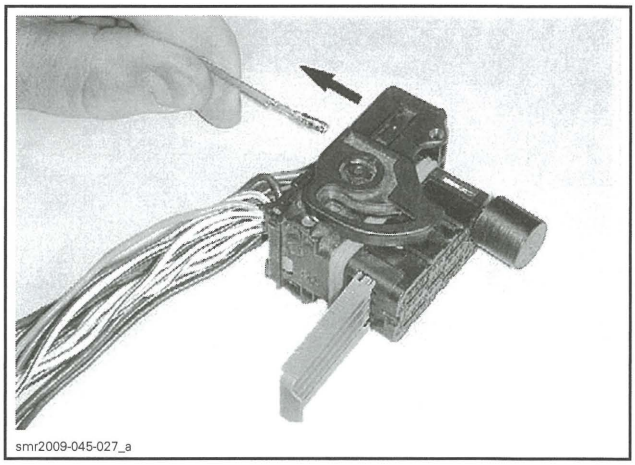
smr2009-045-027_a

NOTICE Before installing wire terminals in the connector, ensure all terminals are properly crimped on wires. After installation of wire terminals in the connectors, ensure they are properly locked by gently pulling on them as if to extract them.

FURUKAWA CONNECTOR

Furukawa Connector Application

Voltage regulator/rectifier.

Terminal Removal

1. Remove the secondary lock (plastic insert).

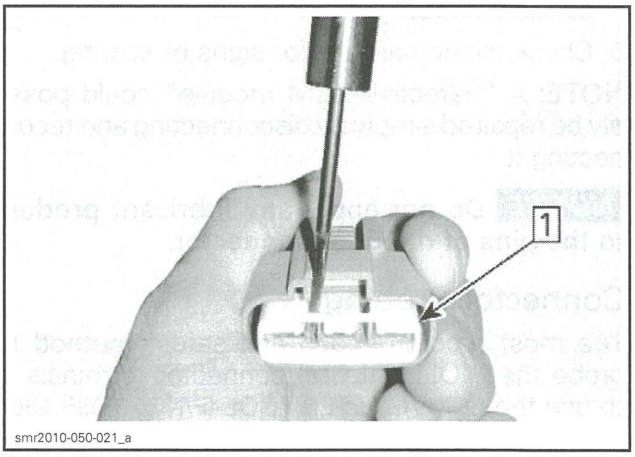

smr2010-050-021_a

Step 1: Remove the secondary lock

2. Carefully insert the GM TERMINAL EXTRACTOR (P/N 12094430) between the lock and the pin to release the pin.

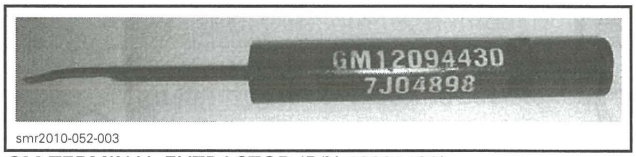

smr2010-052-003

GM TERMINAL EXTRACTOR (P/N 12094430)

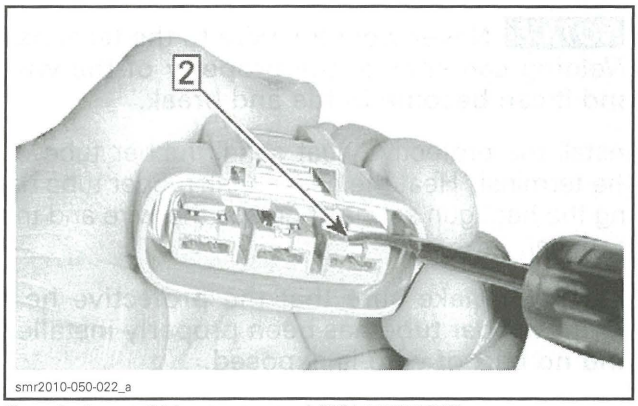

Step 2: Insert GM extractor tool (P/N 12094430)

3. Gently pull on the wire to extract the pin out the back of the connector.

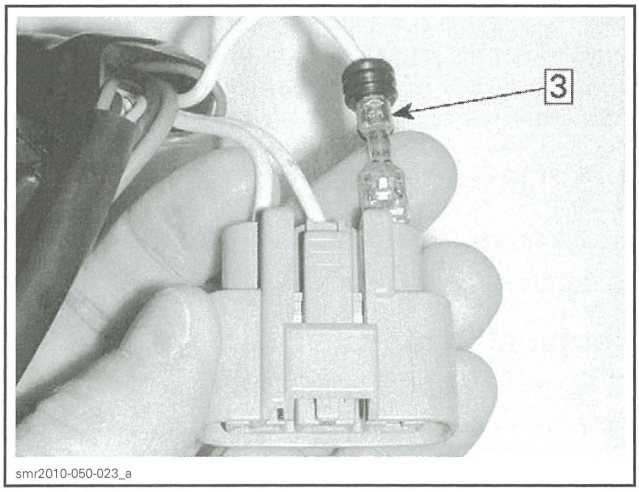

Step 3: Pull wire to extract pin

NOTICE Before installing terminals in the connectors, ensure all terminals are properly crimped on the wires. After installation of the wire terminals in the connectors, ensure they are properly locked by gently pushing on them as if to extract them.

BATTERY AND STARTER CABLE TERMINALS

Cable Crimping

Carefully strip the wire approximately to 10 mm (3/8 in) in length, using a wire stripping tool or sharp blade/knife.

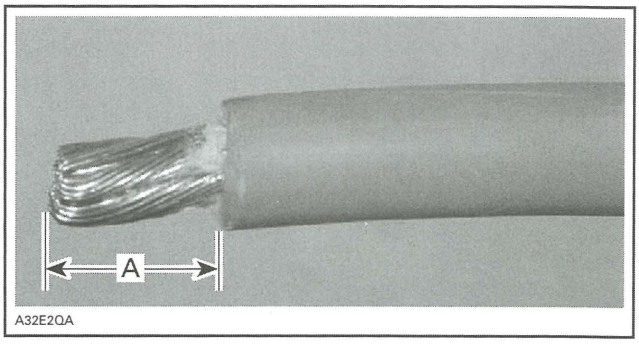

A. 10 mm (3/8 in)

NOTE: Make sure not to cut wire strands while stripping the wire.

Install the appropriate terminal on the wire according to the requirement. Refer to appropriate *PARTS CATALOG*.

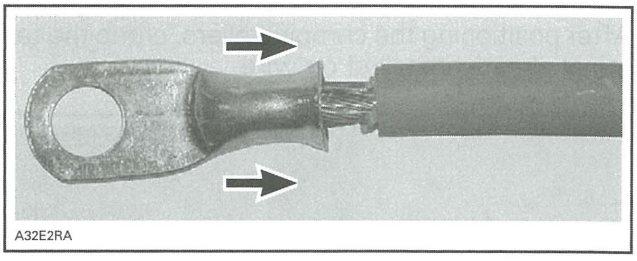

INSTALLATION OF TERMINAL

Follow the instructions provided with the CRIMPING TOOL (HEAVY GAUGE WIRE) (P/N 529 035 730) to select the proper position of the tool.

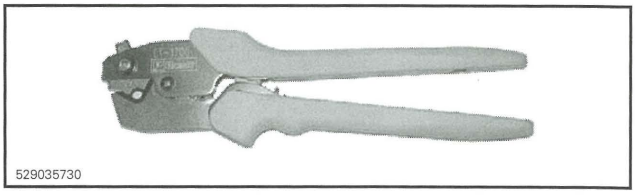

NOTE: Different wires require different crimping pliers settings.

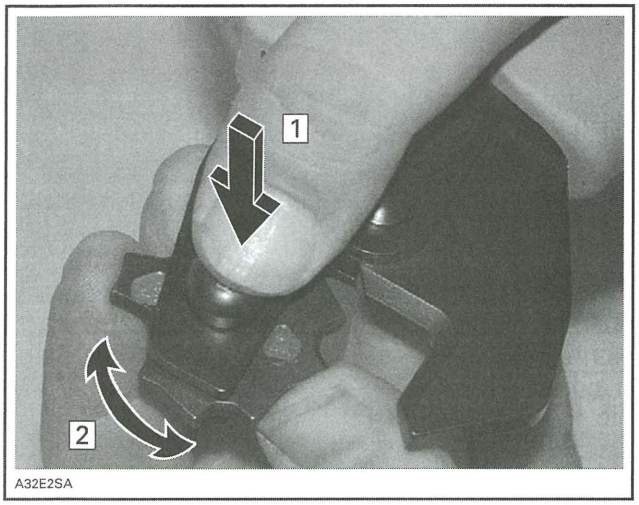

A32E2SA

POSITIONING THE CRIMPING PLIERS
Step 1: Press
Step 2: Rotate

After positioning the crimping pliers, crimp the terminal already installed on wire.

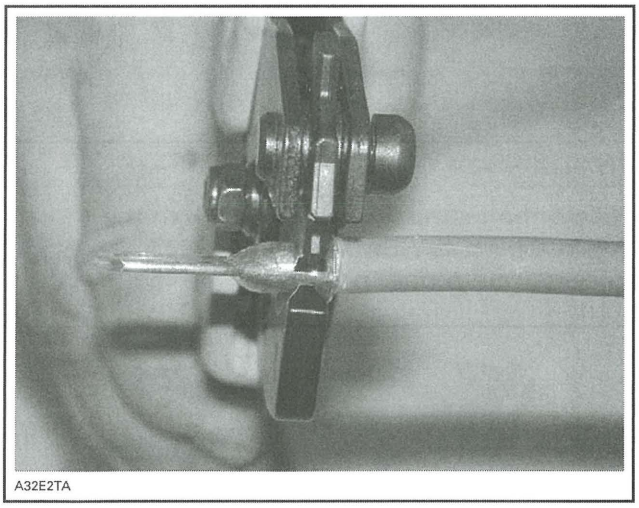
A32E2TA

CRIMPING OF WIRE

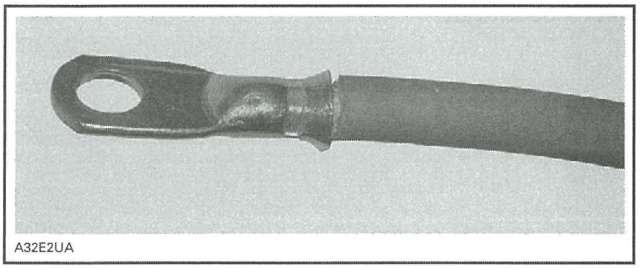
A32E2UA

PROPERLY CRIMPED WIRE

To verify, if the wire is properly crimped, apply some pulling force on wire and the terminal at the same time from both directions.

NOTICE **Never weld the wire to the terminal. Welding can change the property of the wire and it can become brittle and break.**

Install the protective heat shrink rubber tube on the terminal. Heat the heat shrink rubber tube using the heat gun so that it grasps the wire and the terminal.

NOTICE **Make sure that the protective heat shrink rubber tube has been properly installed and no part of wire is exposed.**

IGNITION SYSTEM

SERVICE TOOLS

Description	Part Number	Page
ECM ADAPTER TOOL	529 036 166	297
FLUKE 115 MULTIMETER	529 035 868	296

GENERAL

SYSTEM DESCRIPTION

The battery supplies the primary side of ignition coil through the main relay (R2) while the ECM completes the circuit for each cylinder by switching it to the ground at the right moment. The ECM can detect open and short circuit in the primary winding but it does not check the secondary winding.

The EMS controls the ignition system. For more information, refer to *ENGINE MANAGEMENT* section.

Ignition Timing

Ignition timing is not adjustable.

TROUBLESHOOTING

It is good practice to check for fault codes using the B.U.D.S. software as a first troubleshooting step. Refer to *DIAGNOSTIC SYSTEM AND FAULT CODES* subsection.

Always refer to the *WIRING DIAGRAM* when troubleshooting an electrical circuit.

Refer to *POWER DISTRIBUTION* for fuse and relay information.

DIAGNOSTIC GUIDELINES

The following is provided to help in diagnosing the probable cause of a problem. It is a guideline and should not be assumed to list all possible causes.

ENGINE WILL NOT START (ENGINE TURNS OVER)

1. Fouled or defective spark plug
   - *Replace.*
2. Defective CPS
   - *Check operation of CPS and replace if necessary. Refer to ELECTRONIC FUEL INJECTION section.*
3. Defective trigger wheel
   - *Check. Refer to PTO HOUSING/MAGNETO.*
4. Defective ignition circuit
   - *Check fuse 5 of fuse box 1, ignition coil and wiring condition.*
5. Defective fuel pump
   - *Check fuel pump, refer to FUEL SYSTEM.*
6. Defective fuel injectors or circuit
   - *Check fuel injectors, refer to ENGINE MANAGEMENT.*

ENGINE HARD TO START

1. Spark plug faulty, fouled or worn out
   - *Check spark plug condition. Replace if necessary.*
2. Low fuel pressure
   - *Test fuel pressure, refer to FUEL SYSTEM.*

ENGINE MISFIRES, RUNS IRREGULARLY

1. Fouled, defective, worn spark plugs
   - *Check/verify heat range/gap/replace.*
2. Damaged trigger wheel/loose CPS
   - *Check. Refer to PTO HOUSING/MAGNETO.*
3. Defective ignition circuit
   - *Check ignition coil, fuse 5, and wiring condition.*
4. Poor engine grounds
   - *Check/clean/repair.*

ENGINE CONTINUALLY BACKFIRES

1. Fouled, defective spark plugs
   - *Clean/replace.*
2. Damaged trigger wheel/defective or loose CPS
   - *Check, refer to ELECTRONIC FUEL INJECTION.*

PROCEDURES

IGNITION SWITCH

Ignition Switch Quick Test

Turn ignition switch to ON position.

If multifunction gauge turns on (assuming it works), the ignition switch is good.

If multifunction gauge does not turn on, check the following in this order:
- Battery
- Fuses 1 and 2 of fuse box 2
- Fuse 4 and 8 of fuse box 1
- ECM is properly powered (refer to *ENGINE MANAGEMENT*)
- Ignition switch.

Ignition Switch Access

Refer to *BODY* and remove upper console.

Ignition Switch Wire Identification

FUNCTION	PIN	WIRE COLOR
12 Vdc output (lights)	A	YELLOW/BLUE
12 Vdc input	B	BEIGE/WHITE
Ground (through ECM)	C	ORANGE/VIOLET
Ground signal to ECM in OFF position	D	YELLOW/ORANGE
D.E.S.S. signal	E	ORANGE/RED
12 Vdc output (ECM, starter solenoid and start switch)	F	BLACK/YELLOW

IGNITION COIL

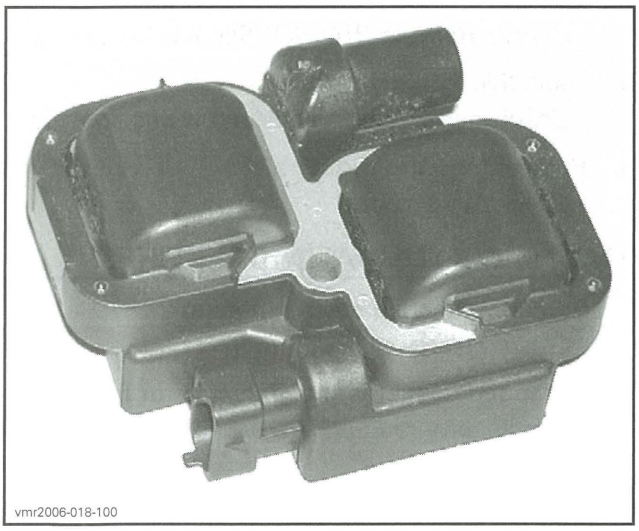
vmr2006-018-100

Ignition Coil Access

Refer to *BODY* and remove upper console.

Ignition Coil Installation

Install a new elastic nut and tighten to the specified torque.

IGNITION COIL RETAINING BOLT TIGHTENING TORQUE
8 N•m ± 1 N•m (71 lbf•**in** ± 9 lbf•**in**)

Quick Test with B.U.D.S.

Connect to the latest applicable B.U.D.S. software. Refer to *COMMUNICATION TOOLS AND B.U.D.S.* section.

In B.U.D.S., select the **Activation** tab and the **ECM** tab.

You should hear the spark occurring. In doubt, use an inductive spark tester. If there is no spark, perform the following checks.

NOTE: Keep in mind that even if there is a spark during this static test, voltage requirement is higher to produce a spark in the combustion chamber when engine is running. Ignition coil could be not working in real operation. Replacing ignition coil may be necessary as a test.

NOTE: Ensure spark plug cable is on the appropriate cylinder.

Ignition Coil Input Voltage Test

Disconnect the 3-pin connector from the ignition coil.

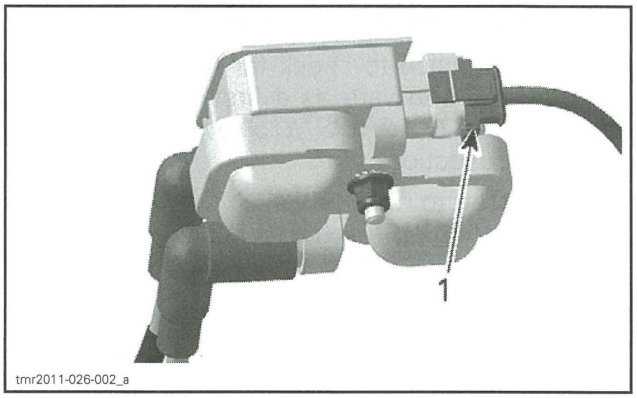

tmr2011-026-002_a

1. Ignition coil connector

Turn ignition switch to ON.

Using a the FLUKE 115 MULTIMETER (P/N 529 035 868), read voltage.

IGNITION COIL CONNECTOR	VOLTAGE
Pin 2 with battery ground	Battery voltage

Battery voltage should be read.

If Battery voltage is NOT read, check continuity of ignition coil supply circuit.

Ignition Coil Ground Circuit Continuity Test

Disconnect the ECM connector "A" and connect it to the ECM ADAPTER TOOL (P/N 529 036 166).

Check wiring continuity as per following table.

COMPONENT	PIN (IGNITION COIL CONNECTOR)	PIN (ECM CONNECTOR)
Cylinder 1 (front)	1	A-M1
Cylinder 2 (rear)	3	A-M2

Ignition Coil Resistance Test

An ignition coil with good resistance measurement can still be faulty. Voltage leak can occur at high voltage level which is not detectable with an ohmmeter. Replacing the ignition coil may be necessary as a test.

Disconnect ignition cables from spark plugs.

Primary Windings

Disconnect ECM "A" connector and connect it to the ECM ADAPTER TOOL (P/N 529 036 166).

Using a multimeter, check resistance in primary windings as follows.

PRIMARY CIRCUIT	ENGINE CONNECTOR (HIC)	ECM CONNECTOR "A"	RESISTANCE @ 20°C (68°F)
Cylinder 1 (front)	Pin E	A-M1	.3 - .6 Ω
Cylinder 2 (rear)		A-M2	

If any resistance is not good, measure resistance directly on coil. If second test is ok, check wiring.

Secondary Windings

Due to the integrated diode, it is not possible to take any resistance measurement of the secondary winding.

SPARK PLUG

For spark plug replacement procedure, refer to *PERIODIC MAINTENANCE PROCEDURE* subsection.

Troubleshooting Fouled Spark Plug

Fouling of the spark plug is indicated by irregular running of the engine, decreased engine speed due to misfiring, reduced performance, and increased fuel consumption. This is due to a loss of compression. Other possible causes are: prolonged idling or low-speed riding, a clogged air filter, incorrect fuel, defective ignition system, incorrect spark plug gap, lubricating oil entering the combustion chamber, or too cold spark plug. The plug face of a fouled spark plug has either a wet black deposit or a black carbon fouling. Such coatings form a conductive connection between the center electrode and ground.

Spark Plug Analysis

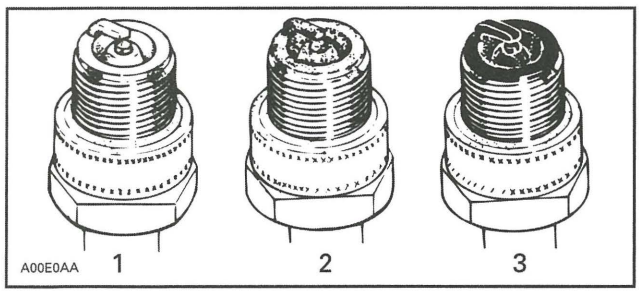

TYPICAL
1. *Overheated (light grey, white)*
2. *Normal (light brown, brown)*
3. *Fouled (black, wet or dry, dark deposits, grey, melted coating)*

The plug face reveals the condition of the engine, operating condition, method of driving and fuel mixture. For this reason it is advisable to inspect the spark plug at regular intervals, examining the plug face (i.e. the part of the plug projecting into the combustion chamber).

CHARGING SYSTEM

SERVICE TOOLS – OTHER SUPPLIER

Description	Part Number	Page
NAPA ULTRA PRO BATTERY LOAD TESTER	95260	301

SERVICE PRODUCTS

Description	Part Number	Page
DIELECTRIC GREASE	293 550 004	301

GENERAL

SYSTEM DESCRIPTION

The purpose of the charging system is to keep the battery at a full state of charge and to provide the electrical system with the required electrical power for normal vehicle operation.

Magneto

The magneto is the primary source of electrical energy. It transforms magnetic field into electric current (AC).

The magneto has a 3 phase series stator.

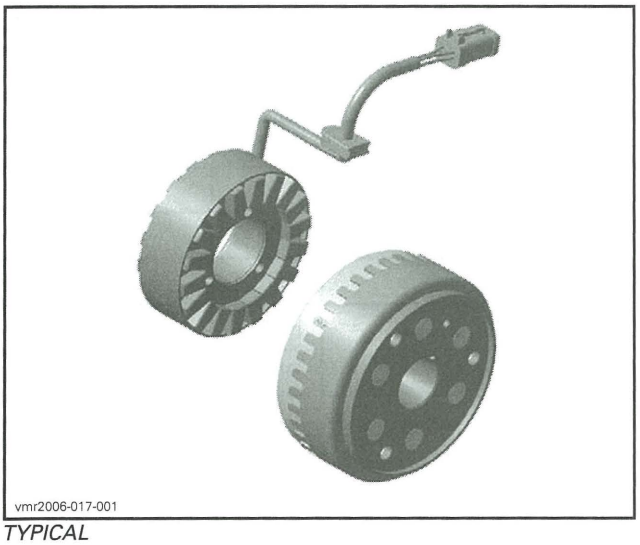

TYPICAL

Voltage Regulator/Rectifier

The rectifier receives AC current from the magneto and transforms it into direct current (DC).

The voltage regulator, included in the same unit, limits voltage to prevent any damage to electrical components.

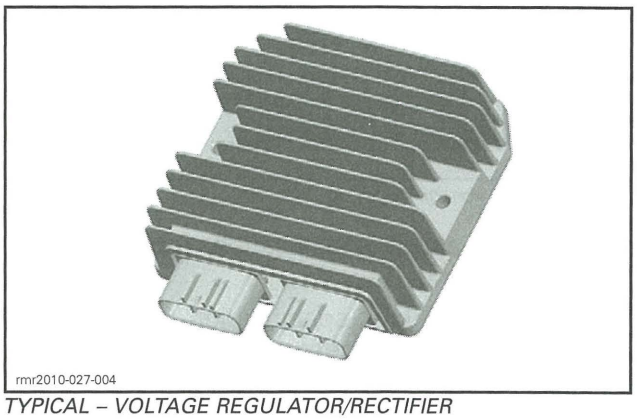

TYPICAL – VOLTAGE REGULATOR/RECTIFIER

Battery

The battery supplies DC power to the electric starter for cranking the engine. During engine starting, it also supplies DC power to the entire electrical system.

At low engine RPM operation and high current load conditions, it supplements the magneto output and helps to maintain a steady system voltage.

INSPECTION

CHARGING SYSTEM OUTPUT

First ensure that battery is in good condition prior to performing the following tests.

Output Voltage Test Using B.U.D.S.

1. Connect to the latest applicable B.U.D.S. software. Refer to *COMMUNICATION TOOLS AND B.U.D.S.* subsection.
2. In B.U.D.S., select the **Monitoring** tab then the **ECM** tab.
3. Start engine.

4. Increase engine RPM as specified in the following table and read voltage in the **ECM Input Voltage** box.

OUTPUT VOLTAGE TEST USING B.U.D.S.	
ENGINE SPEED	VOLTAGE (DC)
4000 RPM	14.8 ± .4 Vdc

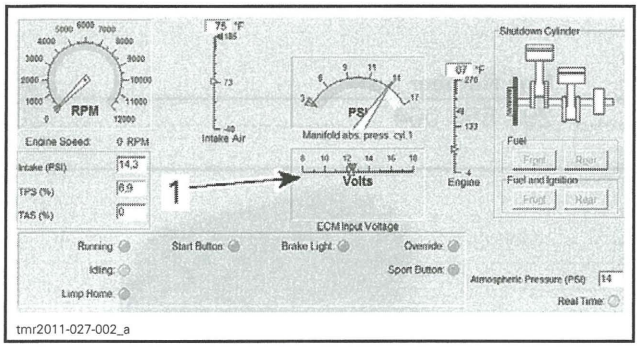

tmr2011-027-002_a

1. ECM Input Voltage box

If voltage is above specification, replace voltage regulator/rectifier.

If voltage is below specification, check stator output and wiring harness prior to concluding that voltage regulator/rectifier is defective. Refer to *MAGNETO SYSTEM* subsection.

Output Voltage Test Using a Multimeter

1. Set multimeter to Vdc.
2. Connect multimeter to battery posts.
3. Start engine.
4. Increase engine RPM as specified in the following table and read voltage with the multimeter.

OUTPUT VOLTAGE TEST USING A MULTIMETER	
TEST ENGINE SPEED	VOLTAGE (DC)
4000 RPM	14.8 ± .4 Vdc

If voltage is above specification, replace voltage regulator/rectifier.

If voltage is below specification, check stator and wiring harness prior to concluding that voltage regulator/rectifier is defective. Refer to *MAGNETO SYSTEM* subsection.

TROUBLESHOOTING

It is good practice to check for fault codes using the B.U.D.S. software as a first troubleshooting step. Refer to *DIAGNOSTIC SYSTEM AND FAULT CODES* subsection.

BATTERY REGULARLY DISCHARGED OR WEAK

1. **Loose or corroded battery cables connections.**
   - Tighten or repair battery cables connections.
2. **Worn or defective battery.**
   - Charge and test battery.
3. **Defective magneto stator.**
   - Test stator.
4. **Defective regulator/rectifier.**
   - Test system voltage.
5. **Damaged magneto rotor or Woodruff key.**
   - Replace magneto rotor or Woodruff key.

PROCEDURES

VOLTAGE REGULATOR/ RECTIFIER

Voltage Regulator/Rectifier Static Test

Due to internal circuitry, there is no static test available.

Voltage Regulator/Rectifier Access

The voltage regulator/rectifier is located on the LH side, underneath dashboard, on the RH side of the battery rack.

Voltage Regulator/Rectifier Wire Identification

FUNCTION	PIN	COLOR
12 Vdc output	RD1-1	RED
12 Vdc ground	RD1-3	BLACK
12 Vac input	RD2-1	YELLOW
12 Vac input	RD2-2	YELLOW
12 Vac input	RD2-3	YELLOW

BATTERY

Battery Information

These vehicles are equipped with a VRLA battery (Valve Regulated Lead Acid). **It is a maintenance-free type battery.**

Refer to battery manufacturer's instructions for proper filling, activation and routine charging procedures.

Battery Voltage Test (No Load Applied)

NOTE: A voltage test is carried out on a battery without discharging current. It is the simplest and most commonly used. However, be aware that the voltage test can be good, while the battery does not have enough power to crank the engine. A load test gives a more accurate condition of the battery.

A voltage reading provides an instant indication of the state of charge of the battery, not of it's current output capacity. A load test gives a more accurate indication of the battery's condition.

If the battery has just received a charge, allow it to rest for 1 - 2 hours before taking a voltage reading.

Set multimeter to Vdc and connect to battery terminals. Always respect polarity.

FULLY CHARGED BATTERY VOLTAGE
12.6 Vdc minimum

NOTE: A battery that shows a voltage of 12.0 Vdc is considered completely discharged and need to be recharged.

Battery Load Test

This is the best test to indicate a battery condition. Use a load testing device such as the NAPA ULTRA PRO BATTERY LOAD TESTER (P/N 95260). It has a 500 Amp adjustable load.

Apply a load of 3 times the ampere-hour rating of the battery. At 14 seconds into the test, check battery voltage.

TIME TO MEASURE INTO TEST	VOLTAGE
14 seconds	Min. 10.5 Vdc @ 20°C (68°F)

Battery Removal

1. Disconnect BLACK (-) cable first, then the RED (+) cable.

NOTICE **Always respect this order for removal; disconnect BLACK (-) cable first.**

2. Remove battery strap retaining nut.

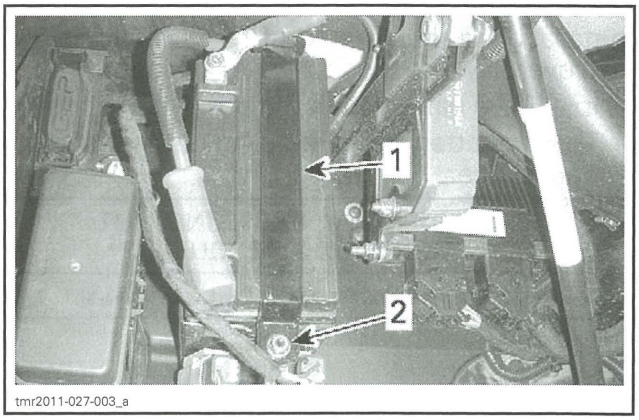

1. Battery strap
2. Battery strap retaining nut

3. Unhook the top of battery strap.
4. Remove battery.

Battery Cleaning

Clean the battery rack, cables and battery posts using a solution of baking soda and water.

Remove corrosion (if so) from battery cable terminals and battery posts using a firm wire brush. Rinse with clear water and dry well.

Battery Storage

If the battery is in storage or used infrequently, disconnect the battery cables to eliminate drain from electrical equipment.

For extended storage, remove the battery from vehicle.

Clean battery terminals and cable connections using a wire brush. Apply a light coat of DIELECTRIC GREASE (P/N 293 550 004) on terminals.

Clean battery casing using a solution of baking soda and water. Rinse battery with clear water and dry well using a clean cloth.

Regularly charge battery as per manufacturer's recommendations.

For other recommendations during storage, refer to battery manufacturer's instructions.

⚠ WARNING

Ensure to store battery in a safe place, out of reach for children.

Battery Installation

NOTICE **Always connect RED (+) cable first then BLACK (-) cable.**

Installation is the reverse of removal procedure, however pay attention to the following:

- Install the battery with the positive post down.
- Tighten battery strap retaining nut to the specified torque.

BATTERY STRAP RETAINING NUT TIGHTENING TORQUE
3.4 N•m ± 0.3 N•m (30 lbf•**in** ± 3 lbf•**in**)

STARTING SYSTEM

SERVICE TOOLS

Description	Part Number	Page
ECM ADAPTER TOOL	529 036 166	304
FLUKE 115 MULTIMETER	529 035 868	305

SERVICE PRODUCTS

Description	Part Number	Page
DIELECTRIC GREASE	293 550 004	307

GENERAL

SYSTEM DESCRIPTION

The starting system is composed of an electric starter supplied in current by the battery through a solenoid.

The starter solenoid receives a 12 volt input from the ignition switch and the ground signal is provided by the ECM when the following engine cranking conditions are met.

- Ignition switch ON.
- Transmission in Park or Neutral position and/or brake pedal held.
- Start button held.

NOTE: If the ignition switch is left ON for more than 15 minutes, engine will not start unless ignition switch is turned OFF, then ON again.

TROUBLESHOOTING

It is good practice to check for fault codes using the B.U.D.S. software as a first troubleshooting step. Refer to *DIAGNOSTIC SYSTEM AND FAULT CODES* subsection.

NOTE: Clear any fault code after solving a problem.

Always refer to the *WIRING DIAGRAM* when troubleshooting an electrical circuit.

Refer to *POWER DISTRIBUTION* for fuse and relay information.

Check all connections, cables and wires. Tighten any loose connections. Replace any chafed or corroded wires/cables.

DIAGNOSTIC GUIDELINES

FUSE 8 INFUSE BOX 1 BURNS WHILE ATTEMPTING TO CRANK ENGINE

1. Defective D2 Diode
   - *Test diode, see procedure in this subsection.*
2. Defective starter solenoid
   - *Test starter solenoid, see procedure in this subsection.*
3. Wiring short to ground
   - *Check wiring.*

ENGINE DOES NOT CRANK AND GAUGE DOES NOT TURN ON

1. Burnt main fuse (F1) in fuse box 2
   - *Check fuse.*
2. Burnt fuse F8 in fuse box 1
   - *Check fuse.*
3. Defective or discharged battery
   - *Test battery, refer to CHARGING SYSTEM.*
4. Defective ignition switch or circuit
   - *Check ignition switch, refer to IGNITION SYSTEM.*

ENGINE DOES NOT CRANK BUT GAUGE TURNS ON

1. Defective brake switch
   - *Check brake switch, refer to BRAKES section.*
2. Defective gearbox position sensor (GPBS)
   - *Check GPBS, refer to GEARBOX AND 4X4 COUPLING UNIT subsection.*
3. Defective start button or circuit
   - *Test start button, see procedure in this subsection.*

4. Defective starter solenoid or circuit
   - *Test starter solenoid, see procedure in this subsection.*
5. Defective starter motor
   - *Check starter motor, see procedure in this subsection.*

PROCEDURES

D2 DIODE (STARTER SOLENOID)

Diode Location

The diode is located in the main harness, near starter solenoid.

Diode Test

1. Make sure ignition switch is OFF.
2. Disconnect pins SS1 and SS2 from starter solenoid.
3. Disconnect ECM connector B.
4. Connect ECM ADAPTER TOOL (P/N 529 036 166) to the ECM connector B.

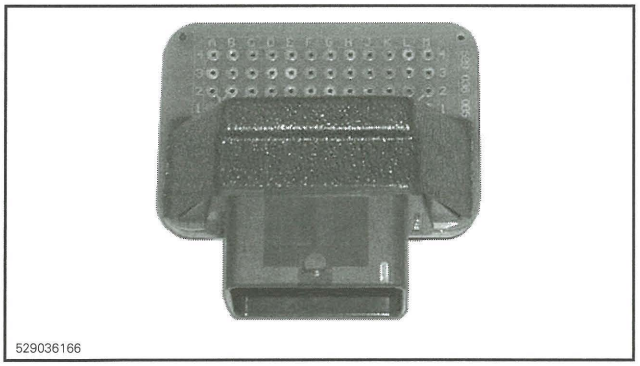

5. Set multimeter to "diode check".

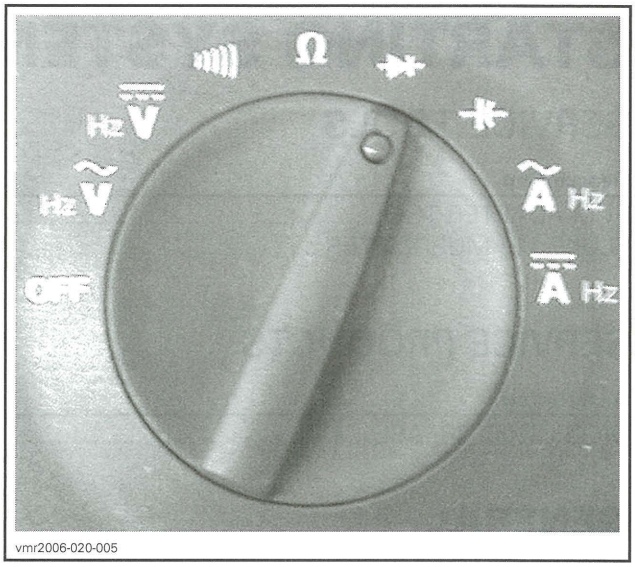

vmr2006-020-005

6. Test diode as per following table.

D2 DIODE TEST		
MULTIMETER POSITIVE PROBE	MULTIMETER NEGATIVE PROBE	RESULT
ECM-B pin A2	ECM-B pin L4	Overload (open)
ECM-B pin L4	ECM-B pin A2	Approximately 0.5 volts

If diode fail any test, replace it.

START BUTTON

Start Button Access

Remove upper console.

Start Button Wire Identification

FUNCTION	PIN	COLOR
12 volt input from ignition switch	1	BLACK/YELLOW
12 volt output to ECM-B pin D1	2	YELLOW/RED

Start Button Test with B.U.D.S.

Connect to the latest applicable B.U.D.S. software. Refer to *COMMUNICATION TOOLS AND B.U.D.S.* section.

In B.U.D.S., select the **Monitoring** and **ECM** tabs.

Press the vehicle's start button and look at the **Start Button** LED.

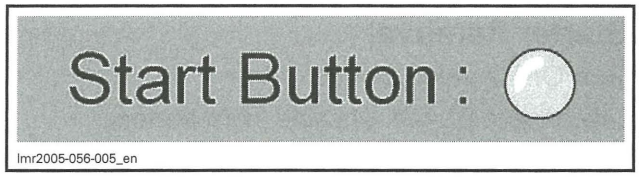

It should turn on, indicating the start signal reaches the ECM.

If it does not turn on, check the start button and wiring.

Start Button Resistance Test

Disconnect start button connector.

Using the FLUKE 115 MULTIMETER (P/N 529 035 868), measure resistance as per the following table.

POSITION	START BUTTON CONNECTOR PIN		RESISTANCE
Switch released	1	2	Infinite (OL)
Switch depressed and held			0.6 Ω max.

Replace start button if defective.

STARTER SOLENOID

Starter Solenoid Access

The starter solenoid is located on the LH side, underneath dashboard, on top of battery rack.

To access starter solenoid, remove the CVT vent inlet tube.

Starter Solenoid Wire Identification

FUNCTION	PIN	WIRE COLOR
12 volt input from ignition switch	SS1	BLACK/ YELLOW
Ground from ECM-B pin L4	SS2	ORANGE/ BROWN

Starter Solenoid Operational Test

1. Disconnect both terminals (SS1 and SS2) from the starter solenoid.
2. Connect SS1 to the positive battery terminal.
3. Momentarily connect SS2 to the chassis ground.

If starter runs, carry out the *STARTER SOLENOID INPUT VOLTAGE TEST.*

If starter does not run, carry out the *STARTER SOLENOID WINDING RESISTANCE TEST.*

Starter Solenoid Input Voltage Test

1. Disconnect connector with BLACK/YELLOW wire.
2. Turn ignition switch ON.
3. Measure voltage as per following table.

STARTER SOLENOID INPUT VOLTAGE TEST		
TEST PROBES		RESULT (START BUTTON RELEASED)
BLACK/ YELLOW wire	Battery ground	Battery voltage

Starter Solenoid Ground Signal Test

1. Disconnect SS2 (ORANGE/BROWN) from solenoid.
2. Turn ignition switch ON.
3. Measure voltage as per following table.

STARTER SOLENOID GROUND SIGNAL TEST		
TEST PROBES		RESULT (START BUTTON DEPRESSED)
ORANGE/ BROWN wire	Battery positive post	Battery voltage

Starter Solenoid Winding Resistance Test

Disconnect terminals from solenoid.

With a multimeter, check primary winding resistance as follows.

STARTER SOLENOID WINDING RESISTANCE TEST		
TEST PROBES		RESULT @ 20°C (68°F)
Starter solenoid SS1 pin	Starter solenoid SS2 pin	Approximately 5 Ω

If measurement is out of specification, replace solenoid.

Starter Solenoid Voltage Drop Test

Turn ignition key ON.

Measure voltage as per following table while cranking engine in **drowned mode** (to prevent engine starting).

NOTE: For drowned mode, refer to *ENGINE MANAGEMENT* subsection.

STARTER SOLENOID VOLTAGE DROP TEST		
TEST PROBES		RESULT (WHILE CRANKING)
Post coming from battery	Post going to starter	0.2 Vdc max.

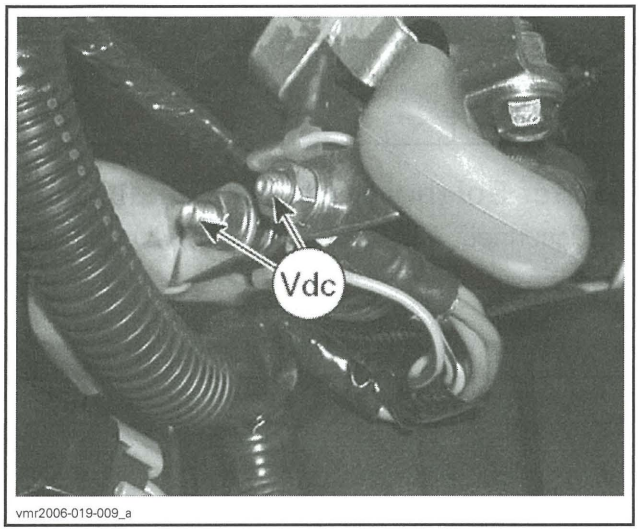

vmr2006-019-009_a

If voltage is out of specification, replace solenoid.

ELECTRIC STARTER

Starter Access

To access starter electrical terminal, refer to *BODY* and remove LH seat and LH lateral console panel.

1000 Models

To access starter for removal, remove drive pulley, driven pulley and CVT back cover, refer to *CONTINUOUSLY VARIABLE TRANSMISSION (CVT)* subsection.

Starter Operation Test

Using booster cables, carefully supply current from a 12 volt battery directly to the starter. Connect the BLACK (-) cable first. Then connect the remaining jumper cable from the battery then to the starter.

If starter turns, test other starting system components.

Starter Removal

Turn OFF ignition switch.

Disconnect BLACK (-) cable from battery.

⚠ WARNING

Always disconnect BLACK (-) cable first and reconnect last.

Disconnect RED (+) cable from starter.

Clean starter area.

Remove starter retaining screw.

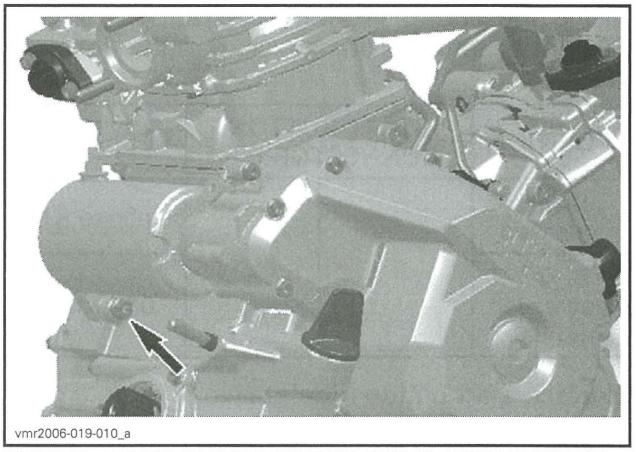
vmr2006-019-010_a

TYPICAL - SOME PARTS REMOVED FOR CLARITY PURPOSE ONLY

Carefully pry starter out of the engine crankcase.

Starter Installation

Installation is the reverse of removal procedure. However, pay particular attention to the following.

Make sure that starter and engine mating surfaces are free of debris. Serious problem may arise if the starter is not properly aligned.

Bring starter close to its location. Rotate it so that its mounting ear allows installation in engine crankcase.

Push starter in place and align mounting ear to install screw. Tighten to the specified torque.

STARTER MOUNTING SCREW TIGHTENING TORQUE	
Starter mounting screw	25 N•m (18 lbf•ft)

Connect the RED (+) cable to the starter and tighten nut and apply specified product.

⚠ CAUTION When connecting the RED (+) cable to the starter motor, make sure the battery cables are disconnected.

STARTER CABLE NUT	
TIGHTENING TORQUE	PRODUCT
6 N•m (53 lbf•**in**)	DIELECTRIC GREASE (P/N 293 550 004)

First connect RED (+) cable to battery then connect the BLACK (-) cable.

Connect battery cables.

⚠ WARNING

Always connect RED (+) cable first then BLACK (-) cable last.

Test starter operation.

DIGITALLY ENCODED SECURITY SYSTEM (D.E.S.S.)

GENERAL

SYSTEM DESCRIPTION

The ignition key contains a ROM chip with a unique digital code that is the equivalent of a unique teeth pattern on a conventional key.

When the ignition key is turned ON, the ECM reads the ignition key and, if it is not recognized, no engine starting will be possible.

NOTE: When a key is not recognized by the ECM, INVALID KEY will be displayed in the multifunction speedometer.

NOTE: All ignition keys have the same teeth pattern. Therefore, they can be used and turned in the switch of any D.E.S.S.-equipped vehicle. However, unless the D.E.S.S. system recognizes (in the ECM) a valid programmed key, the engine starting will not be allowed.

NOTE: Actually, it is the memory of the ECM that is programmed to recognize the digital code of the ignition key.

Up to 10 ignition keys may be programmed in the memory of the ECM. They can also be erased individually or all at once.

Note that the D.E.S.S. circuitry is already activated on all new ECM.

TROUBLESHOOTING

DIAGNOSTIC TIPS

NOTE: It is a good practice to check for fault codes using B.U.D.S. software as a first troubleshooting step.

If D.E.S.S. key is not recognized by the ECM, key is defective or there is a wiring problem, CHECK ENGINE light will turn on and a message will be displayed in the multifunction speedometer.

PROCEDURES

KEY PROGRAMMING

Use the appropriate B.U.D.S. software version available from BOSSWeb. Refer to *COMMUNICATION TOOLS AND B.U.D.S. SOFTWARE* subsection for proper connection instructions.

The B.U.D.S. software is designed to allow, among other things, the programming of ignition key(s) and entering customer information.

For more information pertaining to the use of the software B.U.D.S., use its help which contains detailed information on its functions.

⚠ WARNING

If the computer you are using is connected to the 110 Vac power outlet, there is a potential risk of electrocution when working in contact with water. Be careful not to touch water while working with the VCK.

1. Turn ignition switch to ON using any of the key provided with the vehicle. DO NOT start the engine.
2. Start B.U.D.S. and logon.
3. Wait during detection setup.
4. Ensure the status bar shows the Kw2000 protocol and the appropriate number of modules to its right according to the vehicle model.

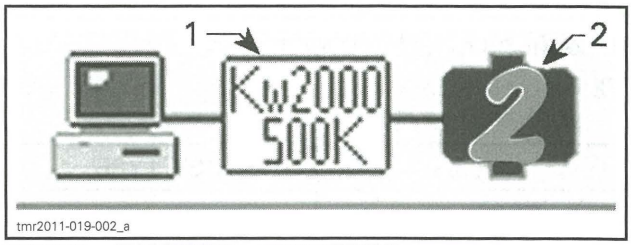

TYPICAL - SUCCESSFUL CONNECTION
1. *Connection protocol*
2. *Number of modules*

5. Click the **Read Data** button.

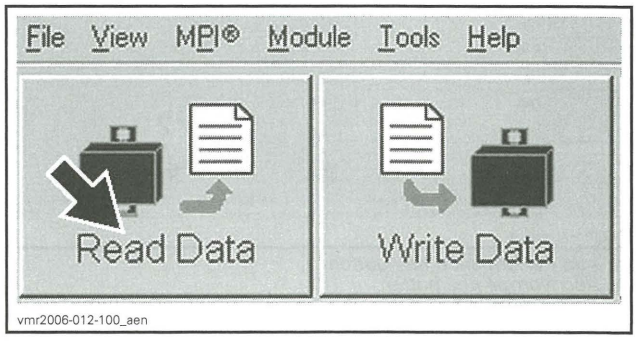

6. Click on **Keys** tab.

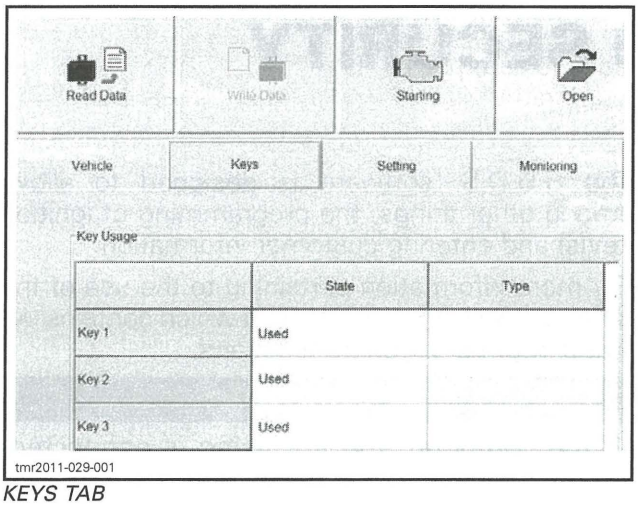

KEYS TAB

7. Click on **Erase All Keys** button.

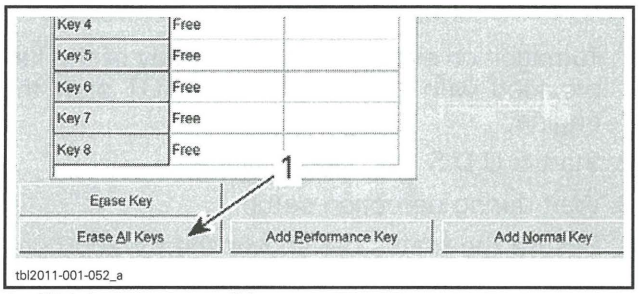

1. Click here to erase all keys

8. Click "YES" to confirm the action.
9. Confirm key color in ignition switch.
10. Program the key by selecting the right type according to chart.

KEY	KEY TYPE
BLACK key	Performance key
GRAY key	Normal key

NOTE: The work key (ORANGE key) is optional.

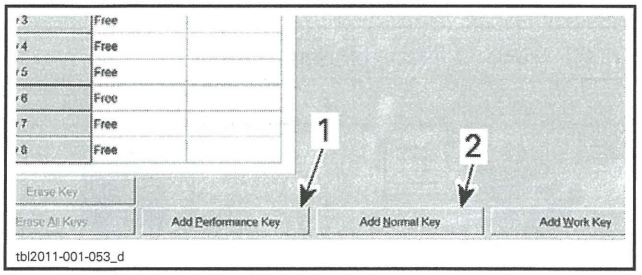

1. Add Performance Key button
2. Add Normal Key button

11. Turn ignition switch to OFF. Remove the key.
12. Install the other key.
13. Turn ignition key to ON position.
14. Program the other key by selecting the right type according to above chart.
15. Repeat previous steps to program other keys.
16. Click on **Write Data** button to transfer new settings and information to the ECM.

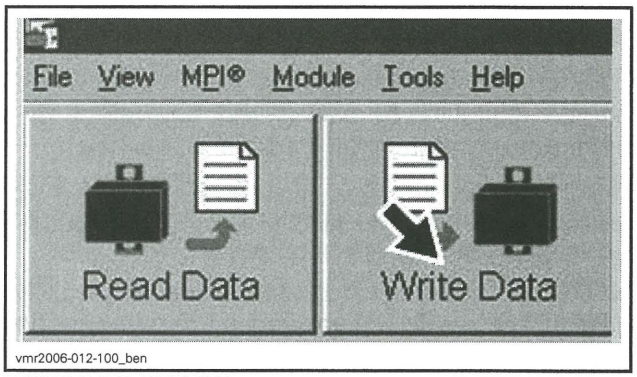

WRITE DATA BUTTON

17. Click on EXIT button to end session.
18. Disconnect all cables and hardware from vehicle.
19. Ensure to reinstall the connector into its housing.

LIGHTS, GAUGE AND ACCESSORIES

SERVICE PRODUCTS

Description	Part Number	Page
DIELECTRIC GREASE	293 550 004	311

GENERAL

NOTICE **It is recommended to always disconnect the battery when replacing any electric or electronic parts. Always disconnect battery exactly in the specified order, BLACK (-) cable first.**

TROUBLESHOOTING

DIAGNOSTIC TIPS

NOTE: It is a good practice to check for fault codes using B.U.D.S. software as a first troubleshooting step. Refer to *COMMUNICATION TOOLS AND B.U.D.S.* subsection.

IMPORTANT: When troubleshooting an electrical system fault, check battery condition, cables and connections first.

Circuit Testing

Check the related-circuit fuse condition with a fuse tester or test lamp (a visual inspection could lead to a wrong conclusion).

NOTE: If the ignition switch is left ON for more than 30 minutes, the accessory relay will shut down.

Electrical Connection Inspection

When replacing an electric or electronic component, always check electrical connections. Make sure they are tight, make good contact, and are corrosion-free. Dirty, loose or corroded contacts are poor conductors and are often the source of a system or component malfunction.

Pay particular attention to ensure that pins are not bent or pushed out of their connectors.

Ensure all wire terminals are properly crimped on wires, and connector housings are properly fastened.

Check for signs of moisture, corrosion or dullness. Clean pins properly and coat them with DIELECTRIC GREASE (P/N 293 550 004) or other appropriate lubricant when reassembling them, except if otherwise specified such as for the ECM connectors.

Pay attention to ground wires.

PROCEDURES

CONSOLE SWITCHES

Switches Access

Refer to *BODY* and remove upper console.

Switches Removal and Installation

Disconnect electrical connector.

Release retaining clips, then push switch out of the console.

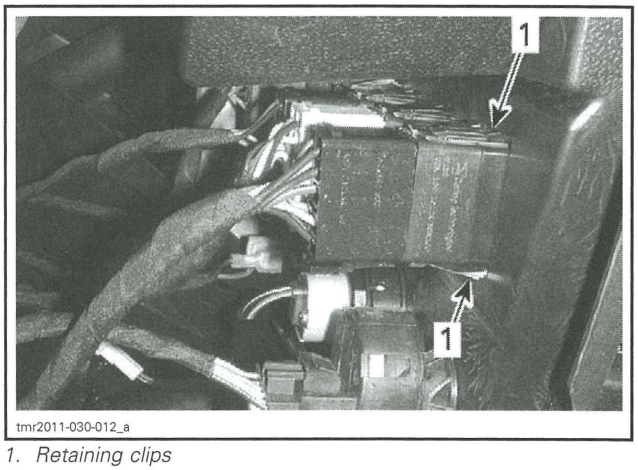

1. Retaining clips

For installation, reverse removal procedure.

Switches Illumination Wire Identification

FUNCTION	PIN	COLOR
12 volt input from fuse F7	See note	RED/BLACK

NOTE: The illumination circuit of all console switches is supplied by the RED/BLACK wire (except hazard switch if equipped) but the pin location differ from one to another.

Switches Illumination Circuit Protection

CONDITION	CIRCUIT PROTECTION
Supplied with accessories relay activated	Fuse 7 of fuse block 1 (from accessories relay R3)

MULTIFUNCTION GAUGE (LCD AND ANALOG/DIGITAL)

Multifunction Gauge Wire Identification

FUNCTION	PIN	COLOR
12 volt input from fuse F4	17	ORANGE/GREEN
12 volt input from fuse F8	16	BEIGE/WHITE
Ground	20	BLACK
CAN LO	18	WHITE/BLACK
CAN HI	19	WHITE/BEIGE
Fuel level gauge supply	4	BROWN/PINK
Fuel level gauge ground	21	VIOLET/PINK
2WD/4WD switch signal (-)	7	BLACK/BEIGE
HI beam signal (+)	5	BLUE
Vehicle speed sensor signal (VSS)	9	PINK

Multifunction Gauge Circuit Protection

CONDITION	CIRCUIT PROTECTION
Supplied at all times	Fuse 8 of fuse block 1 (from fuse 1 of fuse block 2)
Supplied with main relay activated	Fuse 4 of fuse block 1 (from main relay R2)

Multifunction Gauge Removal

1. Remove gauge cover.
2. Disconnect gauge connector.
3. Release retaining clips at the top of gauge.

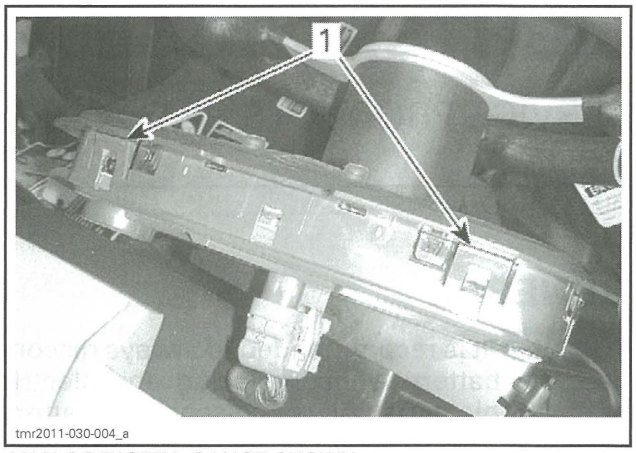

ANALOG/DIGITAL GAUGE SHOWN
1. Retaining clips

4. Tilt top of gauge rearward, then pull it up to remove it from its support.

Multifunction Gauge Installation

For the installation, reverse the removal procedure, however pay attention to the following.

Align gauge support top in the gauge cover slots on each side.

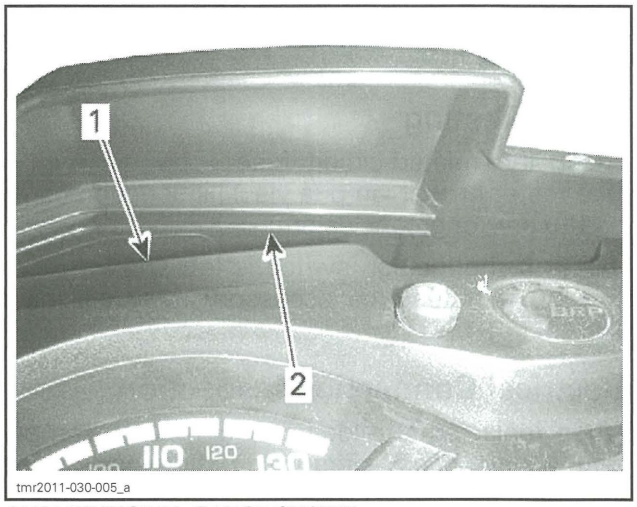

ANALOG/DIGITAL GAUGE SHOWN
1. Gauge support top
2. Gauge cover slot

Maintenance Soon Message

Maintenance Soon Message Manual Reset

1. Select PARK.
2. Turn ignition switch to ON. Do NOT start engine.

NOTE: The steps 3 through 9 must be completed within **5 seconds**.

3. Press override button and HOLD.
4. Press and release brake pedal.

5. Release override button.
6. Press and release brake pedal.
7. Press override button and HOLD.
8. Press and release brake pedal.
9. Release override button.
10. Turn ignition switch to OFF.

NOTE: Do not turn ignition switch to ON before the multifunction gauge turns off.

Maintenance Soon Message Reset Using B.U.D.S.

Connect to the applicable B.U.D.S. software. Refer to *COMMUNICATION TOOLS AND B.U.D.S.* subsection.

Select **Vehicle** tab.

Click on the **Reset Service** button.

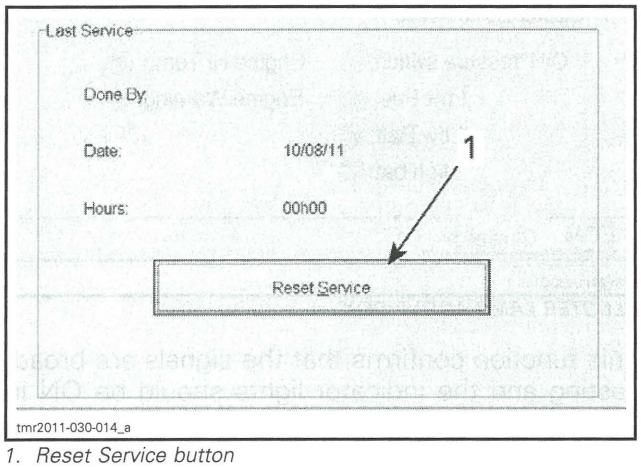

1. Reset Service button

Multifunction Gauge Set-Up Using B.U.D.S.

Connect to the applicable B.U.D.S. software. Refer to *COMMUNICATION TOOLS AND B.U.D.S.* subsection.

Language Selection

Select **Setting** and **Cluster** tabs.

Scroll and select the desired display language in the **Cluster Language** box.

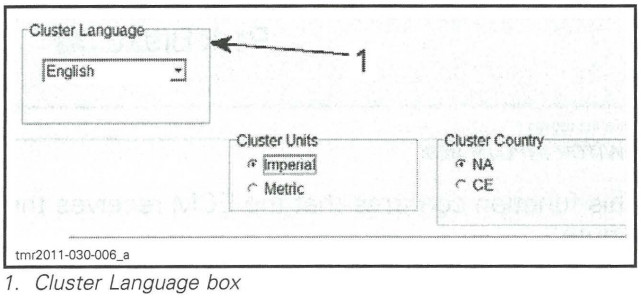

1. Cluster Language box

Units Selection

Select **Setting** and **Cluster** tabs.

Select **Imperial** or **Metric** in the **Cluster Units** box.

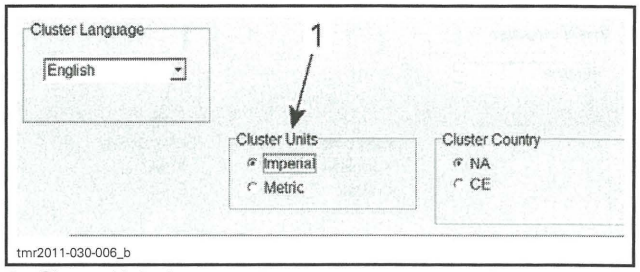

1. Cluster Units box

Tire Size Selection

Select **Setting** and **ECM** tabs.

Scroll and select the appropriate tire diameter (see inscriptions on the tires) in the **Tire Size** box.

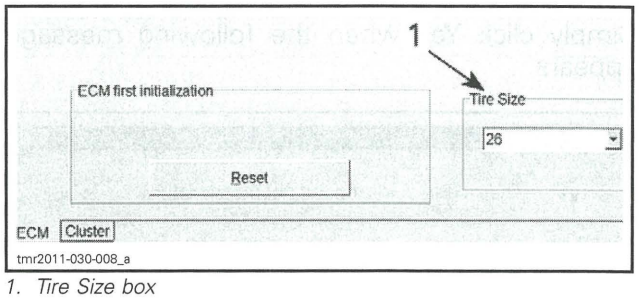

1. Tire Size box

Clock Setting

Select **Setting** and **Cluster** tabs.

To set clock to the 24-hour format, check the **24 H** box. To set it to the 12-hour format, leave the box empty.

If 12-hour format was selected, check the **PM** box if required.

Set hour and minutes using the up or down arrows.

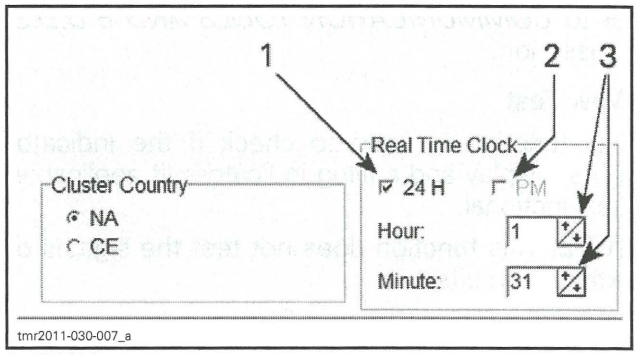

1. 24 H box
2. PM box
3. Arrows

Country Selection

To enable flasher pilot lamp on European Community (CE) models, select **Cluster** and **Setting** tabs.

Select **CE** in the **Cluster Country** box.

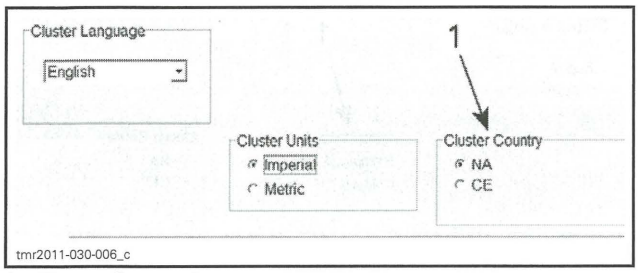

1. Cluster Country box

Outside Europe, select **NA**.

New Multifunction Gauge Registration (coding)

Whenever multifunction gauge is replaced, it is required to use B.U.D.S. to register it in ECM. Simply click **Yes** when the following message appears.

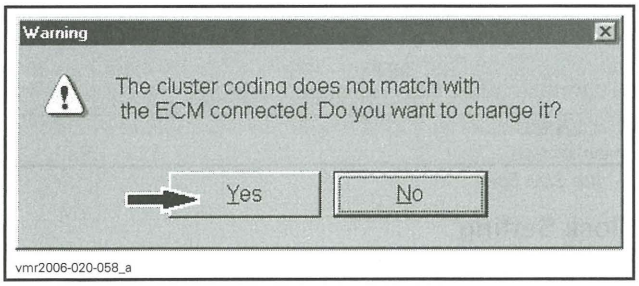

IMPORTANT: If a multifunction gauge from another vehicle model is installed and is not registered in ECM through B.U.D.S., **engine starting will not be allowed until gauge is registered with proper coding**.

Multifunction Gauge Test with B.U.D.S.

Connect to the applicable B.U.D.S. software. Refer to *COMMUNICATION TOOLS AND B.U.D.S.* subsection.

Wow Test

This function is used to check if the indicator lights, display and analog indicators (if applicable) are functional.

NOTE: This function does not test the signals or external circuits.

Select the **Activation** and **Cluster** tabs.

Click on the **WOW Test** button.

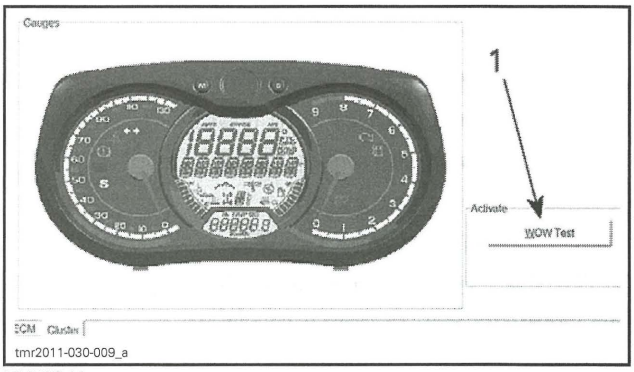

TYPICAL
1. WOW Test button

Indicator Lights Monitoring

Select **Monitoring** and **Cluster** tabs.

Use the **Cluster Lamp Active** box to monitor different indicator lights outputs.

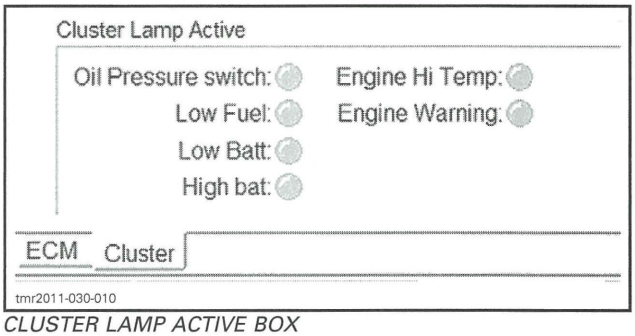

CLUSTER LAMP ACTIVE BOX

This function confirms that the signals are broadcasting and the indicator lights should be ON in the multifunction gauge.

Switches Input Monitoring

Select **Monitoring** and **Cluster** tabs.

Use the **Switch Inputs** box to monitor different switch inputs as you activates the switches.

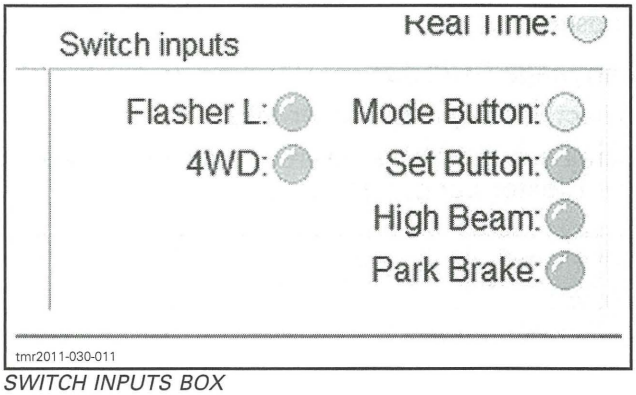

SWITCH INPUTS BOX

This function confirms that the ECM receives the inputs.

Vehicle Parameters Monitoring

Select **Monitoring** and **Cluster** tabs.

In the upper area, the fuel level, engine speed (RPM), vehicle speed and engine coolant temperature are displayed.

This function confirms that the signals are broadcasting and the information should be displayed on the multifunction gauge.

12 VOLT POWER OUTLET

12 Volt Power Outlet Removal and Installation

Refer to *BODY* and remove upper console.

Unplug the connectors of the power outlet.

Unscrew the retaining nut.

Reverse procedure for installation.

12 Volt Power Outlet Wire Identification

FUNCTION	PIN	COLOR
12 volt input from fuse F12	2	RED/BROWN
Ground (to ground terminal BK3)	1	BLACK

12 Volt Power Outlet Circuit Protection

CONDITION	CIRCUIT PROTECTION
Supplied with accessories relay activated	Fuse 12 of fuse block 1 (from accessories relay R3)

HEADLIGHTS

Headlight Wire Identification

HEADLIGHTS RELAY (R4)		
FUNCTION	PIN	COLOR
12 volt input from fuse F11 (headlights power)	7D	YELLOW/BLACK
12 volt input from ignition switch pin A (relay winding input)	6D	YELLOW/BLUE
12 volt output to headlights low beam and low/high beam switch	6C	GREEN
Relay winding ground (from ECM-B G1)	7C	ORANGE/BLACK

HEADLIGHT LOW/HIGH BEAM SWITCH (EXCEPT EUROPE)		
FUNCTION	PIN	COLOR
12 volt input from headlights relay	2	GREEN
12 volt output to high beam headlights	3	BLUE

HEADLIGHT LOW/HIGH BEAM SWITCH (EUROPE - IN MULTIFUNCTION SWITCH)		
FUNCTION	PIN	COLOR
12 volt input from headlights relay	MGC-4	GREEN
12 volt output to high beam headlights (HI position)	MGC-5	BLUE
12 volt output to high beam headlights (PASS position)	MGC-2	BLUE

Headlights Circuit Protection

CONDITION	CIRCUIT PROTECTION
Supplied at all times	Fuse 11 of fuse block 1 (from fuse 2 of fuse block 2)

Headlight Test

Disconnect headlight connector. Refer to *BULB REPLACEMENT*.

Using a multimeter, measure the voltage on headlight connector as follows.

SWITCH POSITION	WIRE COLOR		VOLTAGE
LO beam/ HI beam	GREEN (Low beam bulb)	BLACK	Battery voltage
HI beam	BLUE (Hi beam bulb)	BLACK	

Headlight Bulb Replacement

NOTICE **Never touch glass portion of an halogen bulb with bare fingers, it shortens its operating life. If glass is touched, clean it with isopropyl alcohol which will not leave a film on the bulb.**

NOTE: The same bulb type is used for LO and HI beams on both sides of vehicle.

Unplug connector from bulb.

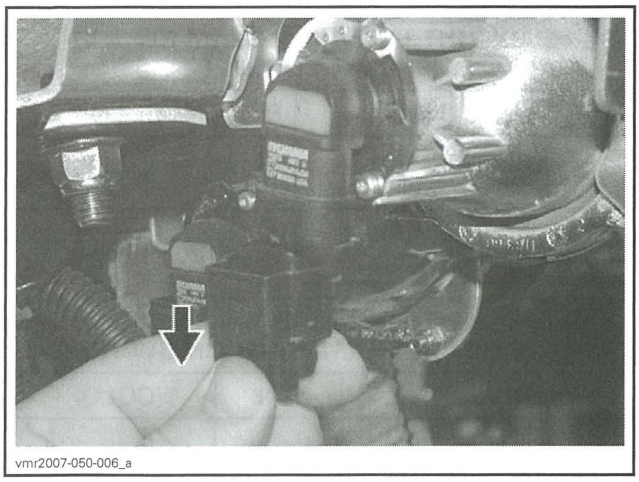
vmr2007-050-006_a

Rotate bulb.

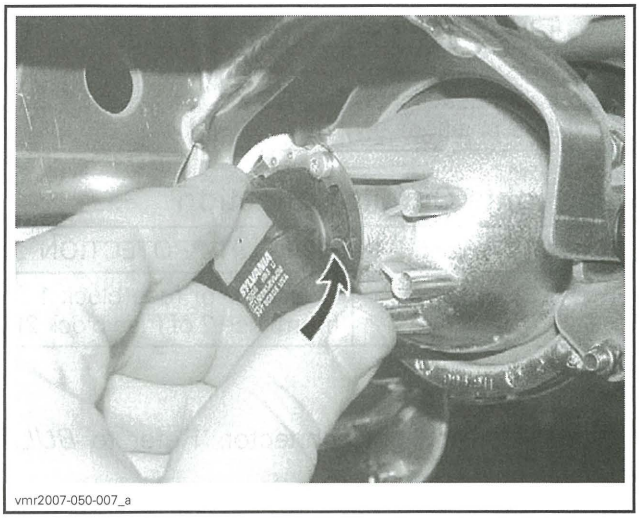
vmr2007-050-007_a

Pull bulb out.

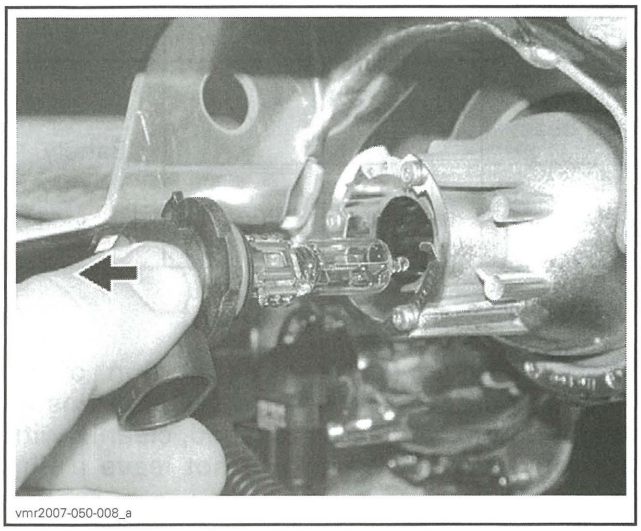
vmr2007-050-008_a

Properly reinstall removed parts in the reverse order of their removal.

Validate headlight operation.

Headlamp Beam Aiming

Select high beam.

Beam aiming is correct when center of high beam is 130 mm (5 in) below the headlight horizontal center line, scribed on a test surface, 5 m (16 ft) away.

NOTE: Load vehicle as per normal use.

Measure headlight center distance from the ground. Scribe a line at this height on test surface (wall or screen). Light beam center should be 130 mm (5 in) below scribed line.

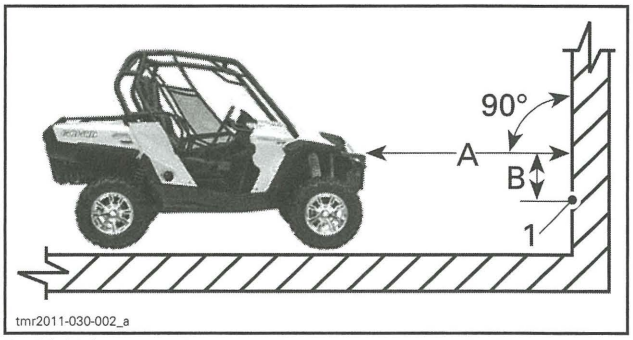

tmr2011-030-002_a

1. Light beam center

A. 5 m (17 ft)
B. 131 mm (5 in)

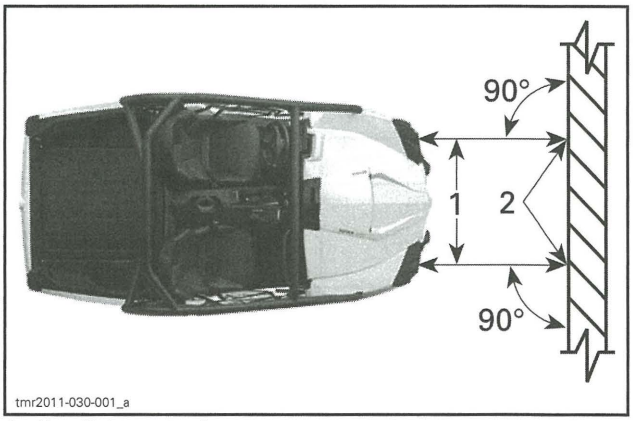

tmr2011-030-001_a

1. Headlight center lines
2. Light beam center

Beam Aiming Adjustment

Turn adjustment screws to adjust beam height and side orientation as described below. Adjust both headlight evenly.

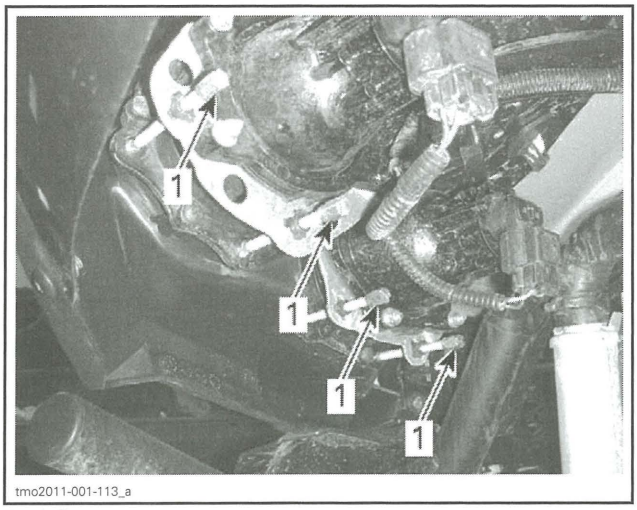

tmo2011-001-113_a

1. Adjustment screws

TAILLIGHTS/BRAKE LIGHTS

Taillight/Brake Light Wire Identification

BRAKE LIGHT RELAY (R8)		
FUNCTION	PIN	COLOR
12 volt input from fuse F4 (LH brake light power)	12B	ORANGE/GREEN
12 volt input from brake light switch (relay winding input)	11B	RED/ORANGE
12 volt output to LH brake light	11A	WHITE/ORANGE
Relay winding ground (to ground terminal BK2)	12A	BLACK

BRAKE LIGHT SWITCH		
FUNCTION	PIN	COLOR
12 volt input from fuse F4	2	ORANGE/GREEN
12 volt output to RH brake light and R8 relay winding	1	RED/ORANGE

Taillight/Brake Light Circuit Protection

CONDITION	CIRCUIT PROTECTION
Supplied with main relay activated	Fuse 4 of fuse block 1 (from main relay R2)

Taillight/Brake Light Bulb Replacement

Open upper tail gate.

Remove both taillight retaining screws.

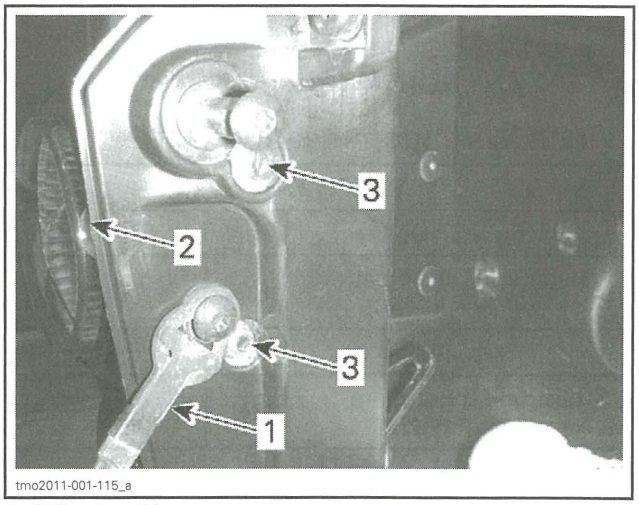

tmo2011-001-115_a

1. Tail gate cable
2. Taillight
3. Retaining screws

Pull taillight out of its location.

Remove bulb socket from taillight.

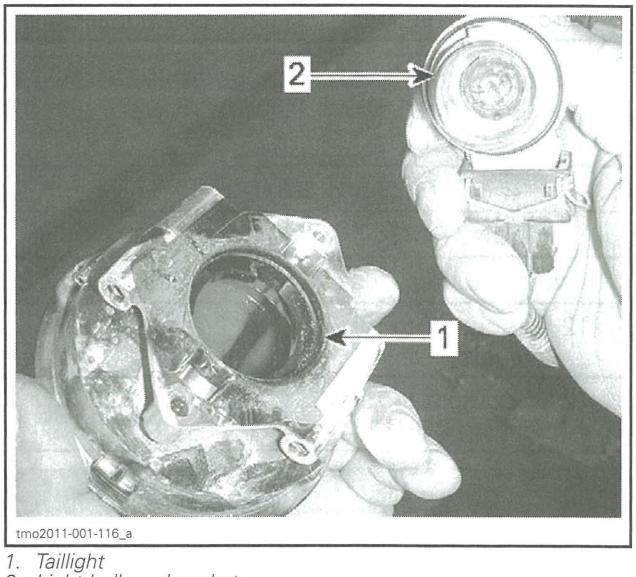

tmo2011-001-116_a

1. Taillight
2. Light bulb and socket

Push the bulb in and hold while turning counterclockwise to release.

Installation is the reverse of the removal procedure.

WINCH

XT and LTD Models Only

Winch Wire Identification

WINCH RELAY		
FUNCTION	PIN	COLOR
12 volt input from battery (winch power)	BP4	RED
Ground	BN4	BLACK
12 volt input from switch ("IN")	SW1	GREEN/BLUE
12 volt input from switch ("OUT")	SW2	LIGHT BLUE
Motor power (switches polarity depending on rotation direction)	SW3	RED (with blue sleeve)
Motor power (switches polarity depending on rotation direction)	SW5	RED (with Yellow sleeve)

NOTE: The small black wire at terminal BN4 is connected to the diodes used to prevent electric arcs in the switch.

WINCH SWITCH		
FUNCTION	PIN	COLOR
12 volt input from fuse 7	2	RED/BLACK
12 volt output to relay winding ("IN")	1	GREEN/BLUE
12 volt output to relay winding ("OUT")	3	LIGHT BLUE

⚠ WARNING

Before testing, make sure the winch is in FREESPOOL mode (Freespool clutch disengaged).

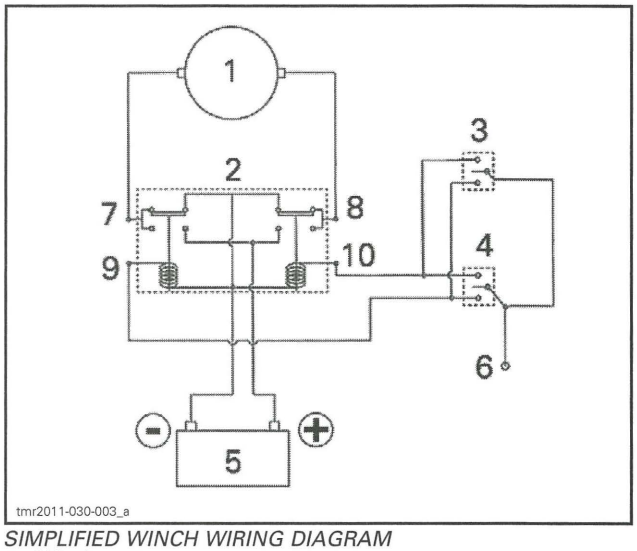

SIMPLIFIED WINCH WIRING DIAGRAM
1. *Winch motor*
2. *Winch relay*
3. *Winch remote control*
4. *Winch switch*
5. *Battery*
6. *12 volt input to switch (switch pin 2 - from fuse 7)*
7. *Winch motor power (SW3)*
8. *Winch motor power (SW5)*
9. *12 volt input to relay winding ("IN" - SW1)*
10. *12 volt input to relay winding ("OUT" - SW2)*

Winch Switch Circuit Protection

CONDITION	CIRCUIT PROTECTION
Supplied with accessories relay activated	Fuse 7 of fuse block 1 (from accessories relay R3)

Winch Removal

1. Disconnect, the battery BLACK (-) cable first, then the RED (+) cable.

⚠ WARNING

Always respect this order for disassembly; disconnect BLACK (-) cable first. Electrolyte or fuel vapors can be present in engine compartment and a spark may ignite them and possibly cause personal injuries.

2. Remove the hook.
   - 2.1 Remove and discard the cotter pin.
   - 2.2 Remove the hook pin.

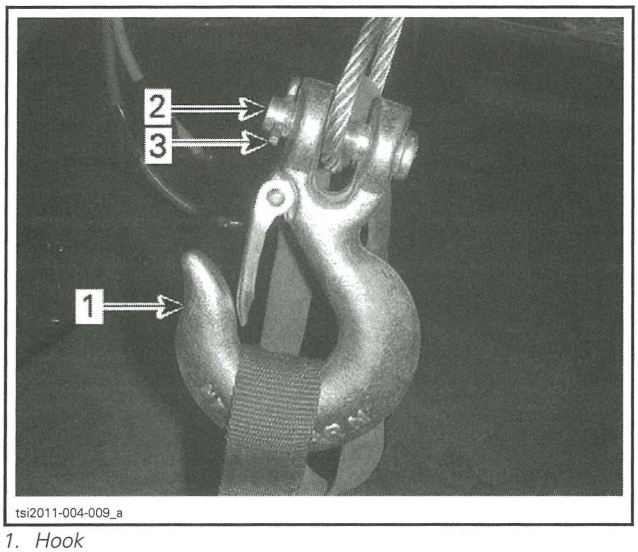

1. *Hook*
2. *Hook pin*
3. *Cotter pin*

3. Remove the four retaining screws from underneath the winch motor.
4. Disconnect both winch power cables.

NOTE: Note the position of the power cables for reinstallation.

5. Protect radiator using strong cardboard.
6. Pass the cable through the roller fairlead.
7. Remove winch.

NOTICE **Be careful not to lean on the radiator while removing winch.**

Winch Installation

For the installation, reverse the removal procedure, however pay attention to the following.

Tighten winch retaining screws to 24.5 N•m ± 3.5 N•m (18 lbf•ft ± 3 lbf•ft).

Connect wires the yellow wire at rear and the blue one at front.

Install a **new** cotter pin on the hook pin.

TURN SIGNALS/HAZARD (EC MODELS ONLY)

Turn Signal Wire Identification

FLASHER MODULE		
FUNCTION	PIN	COLOR
12 volt input from fuse F10	MC2-1	RED/WHITE
12 volt input from fuse F4	MC1-5	ORANGE/GREEN
RH turn 12 volt input from turn signal switch	MC1-1	BEIGE/ORANGE
LH turn 12 volt input from turn signal switch	MC1-2	BEIGE/GREY
Output to RH turn signal lights	MC2-2	BROWN
Output to LH turn signal lights	MC2-3	GREY
Output to multifunction gauge (turn signal indicator)	MC2-4	ORANGE
Ground	MC1-4	BLACK
Hazard 12 volt input from hazard switch	MC1-6	GREEN/ORANGE

TURN SIGNAL SWITCH (IN MULTIFUNCTION SWITCH)		
FUNCTION	PIN	COLOR
12 volt input from fuse F4	MGB-3	ORANGE/GREEN
RH turn 12 volt output to flasher module	MGB-4	BEIGE/ORANGE
LH turn 12 volt output to flasher module	MGB-2	BEIGE/GREY

HAZARD SWITCH		
FUNCTION	PIN	COLOR
12 volt input from fuse F10	2	RED/WHITE
12 volt output to flasher module	3	GREEN/ORANGE
Hazard indicator 12 volt input from fuse F4	8	ORANGE/BROWN
Hazard indicator ground (through bulbs)	7	BLACK/ORANGE

Turn Signal/Hazard Circuit Protection

CONDITION	CIRCUIT PROTECTION
Supplied with main relay (R2) activated	Fuse 4 of fuse block 1 (from main relay R2)
Supplied at all times	Fuse 10 of fuse block 1 (from fuse 2 of fuse box 2)

HORN (EC MODELS ONLY)

Horn Wire Identification

HORN SWITCH (IN MULTIFUNCTION SWITCH)		
FUNCTION	PIN	COLOR
12 volt input from fuse F10	MGB-1	ORANGE/GREEN
12 volt output to horn	MGB-6	BEIGE/BLUE

HORN		
FUNCTION	PIN	COLOR
12 volt input from horn switch	2	BEIGE/BLUE
Ground	1	BLACK

Horn Circuit Protection

CONDITION	CIRCUIT PROTECTION
Supplied with main relay (R2) activated	Fuse 4 of fuse block 1 (from main relay R2)

FRONT DRIVE

SERVICE TOOLS

Description	Part Number	Page
BACKLASH MEASUREMENT TOOL	529 035 665	326
CV BOOT CLAMP PLIER	529 036 120	325
CV JOINT EXTRACTOR	529 036 005	325
SPANNER SOCKET	529 035 649	328

SERVICE PRODUCTS

Description	Part Number	Page
LOCTITE 271 (RED)	293 800 005	330
LOCTITE 277	293 800 073	329
XPS SYNTHETIC GREASE	293 550 010	325, 330

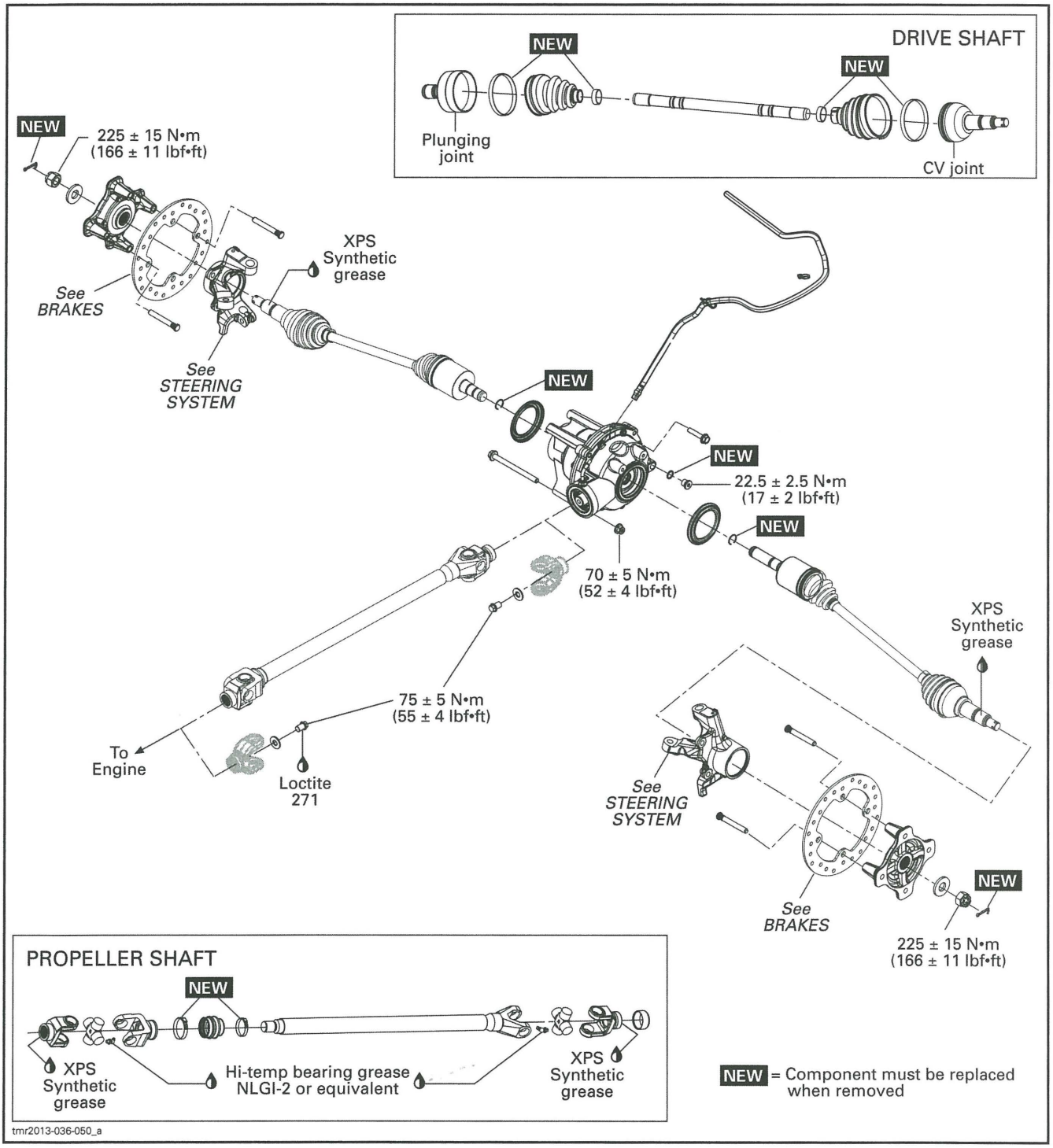
DRIVE SHAFT
NEW
NEW
Plunging joint
CV joint
NEW
225 ± 15 N•m
(166 ± 11 lbf•ft)
XPS Synthetic grease
See BRAKES
See STEERING SYSTEM
NEW
NEW
22.5 ± 2.5 N•m
(17 ± 2 lbf•ft)
NEW
70 ± 5 N•m
(52 ± 4 lbf•ft)
XPS Synthetic grease
75 ± 5 N•m
(55 ± 4 lbf•ft)
To Engine
Loctite 271
See STEERING SYSTEM
See BRAKES
NEW
225 ± 15 N•m
(166 ± 11 lbf•ft)
PROPELLER SHAFT
NEW
XPS Synthetic grease
Hi-temp bearing grease NLGI-2 or equivalent
XPS Synthetic grease
NEW = Component must be replaced when removed
tmr2013-036-050_a

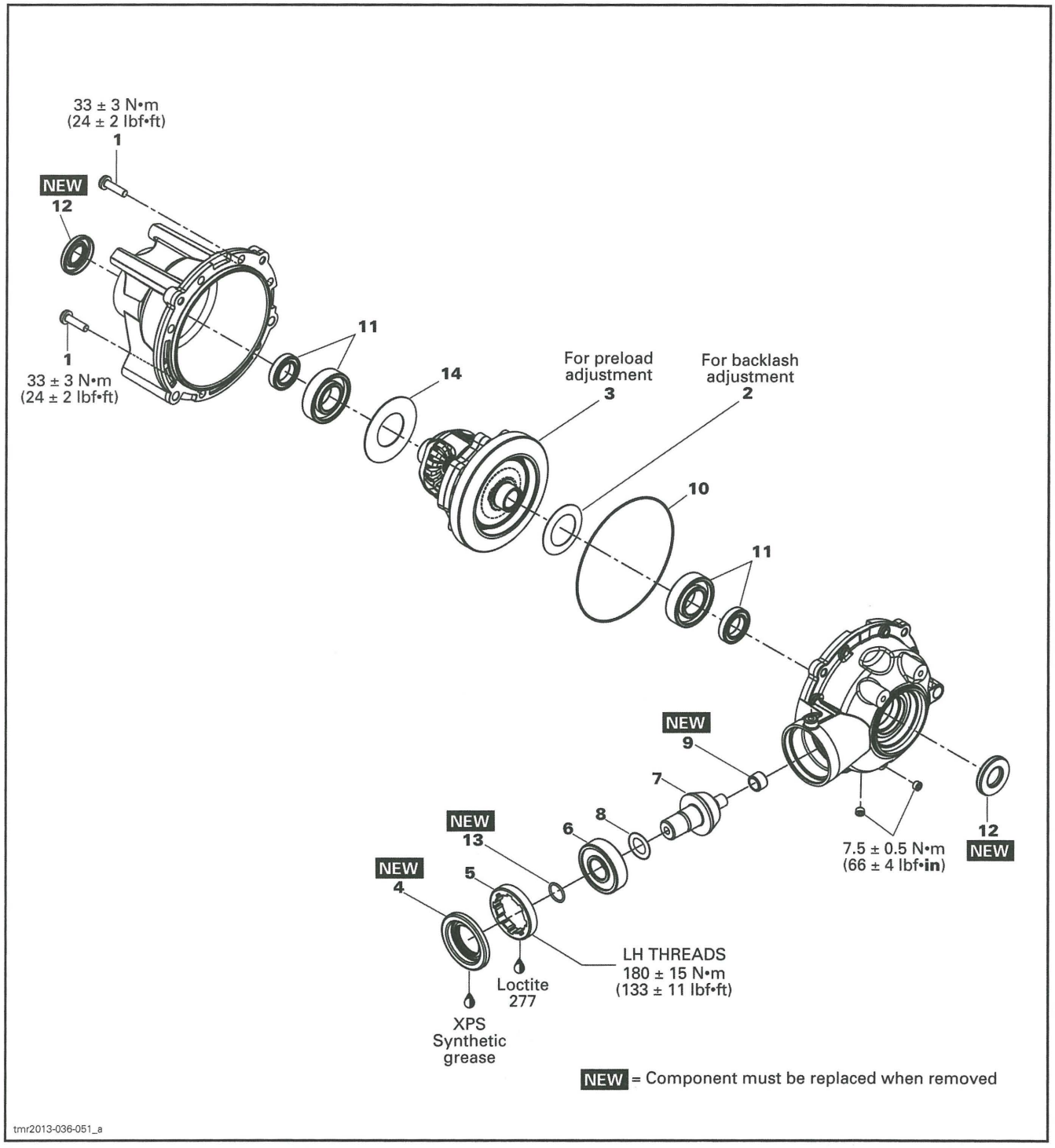

tmr2013-036-051_a

GENERAL

The procedure explained below is the same for the RH and LH sides unless otherwise instructed.

SYSTEM DESCRIPTION

When one wheel is spinning above a certain rate faster than the other wheel, the Visco-Lok® system progressively locks the wheels through its multi-plate clutch.

In the event of a failure, the entire Visco-Lok pump and its carrier will have to be replaced. The Visco-Lok pump itself is a non-serviceable item.

NOTE: If the pump was disassembled, its viscous fluid would be lost and it could not be replaced.

PROCEDURES

WHEEL HUB

Wheel Hub Removal

Lift and support vehicle. Refer to *INTRODUCTION* section for proper procedure.

Select the 4WD position and place the transmission lever on "P".

Remove caliper from knuckle. Refer to *BRAKES* subsection.

Remove the following parts:
- Wheel
- Cotter pin
- Castellated nut
- Belleville washer.

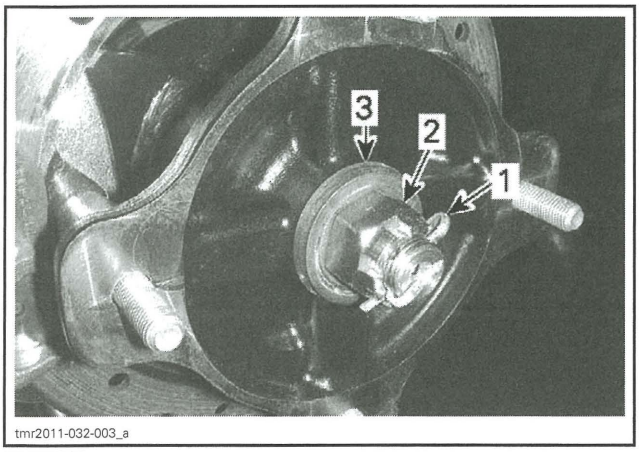

TYPICAL
1. *Cotter pin*
2. *Castellated nut*
3. *Belleville washer*

Remove wheel hub.

Wheel Hub Inspection

Check wheel hub for cracks or other damages.

Check inner splines for wear or other damages.

If any damage is detected on wheel hub, replace it with a new one.

Wheel Hub Installation

The installation is the reverse of removal procedure. However, pay attention to the following.

Install Belleville washer with its domed side outwards.

PART	TORQUE
Castellated nut	225 N•m ± 15 N•m (166 lbf•ft ± 11 lbf•ft)

NOTE: Tighten further castellated nut if required to align grooves with drive shaft hole.

Install a NEW cotter pin.

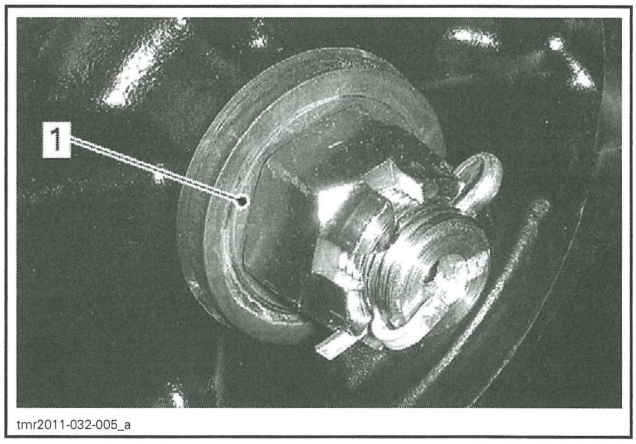

1. *Domed side here*

FRONT DRIVE SHAFT

Front Drive Shaft Removal

Lift and support vehicle. Refer to *INTRODUCTION* section for proper procedure.

Remove the wheel hub, see procedure in this subsection.

Remove the knuckle. Refer to *STEERING SYSTEM* subsection.

Strongly pull drive shaft out of differential.

Discard the stop ring at the end of the shaft.

Front Drive Shaft Inspection

Inspect the condition of boots. If there is any damage or evidence of leaking lubricant, replace them. Refer to *DRIVE SHAFT BOOT*.

Check splines for excessive wear. Replace if necessary.

NOTE: If the splines on plunging joint are worn, a check of differential inner splines should be done.

Front Drive Shaft Installation

The installation is the reverse of the removal procedure. However, pay attention to the following.

Install a NEW stop ring.

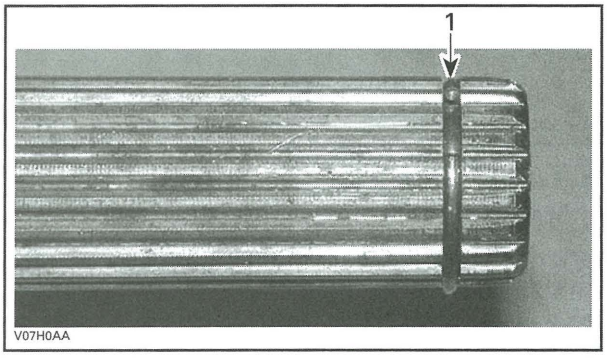

1. Stop ring

Apply XPS SYNTHETIC GREASE (P/N 293 550 010) to the splines.

The wear ring should be closed to the differential.

Reinstall all removed parts.

DRIVE SHAFT BOOT

Drive Shaft Boot Removal

Remove the drive shaft from the vehicle.

Remove drive shaft boot clamps using the following tools:

TOOL	
CV BOOT CLAMP PLIER (P/N 529 036 120)	

Dislodge the large boot end.

Separate the joint from the shaft. Two procedures can be done.

Without the Special Tool

Clamp joint housing in a vise.

Align shaft with joint.

Pull hard on shaft to remove from joint.

Remove boot from drive shaft.

Remove and discard the circlip. A new one is included in the boot kit.

With the Special Tool

Place drive shaft in vice with the joint downward.

Install the CV JOINT EXTRACTOR (P/N 529 036 005) on bearing.

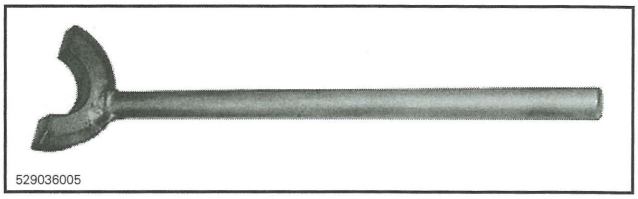

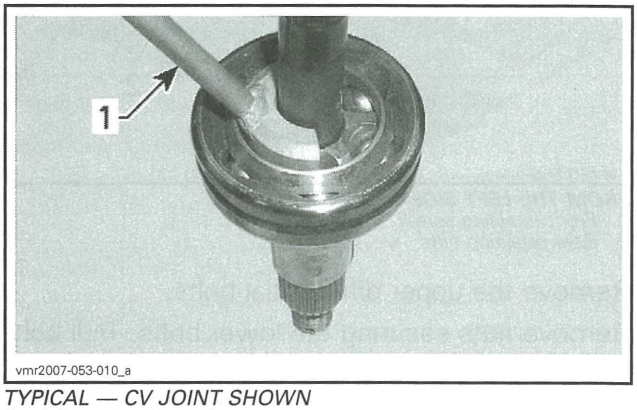

TYPICAL — CV JOINT SHOWN
1. Joint extractor tool

With an hammer, hit on the tool to separate joint from shaft.

When joint and shaft are separated, remove boot from drive shaft.

Remove and discard the circlip. A new one is included in the boot kit.

Drive Shaft Boot Installation

For installation, reverse the removal procedure. Pay attention to the following details.

Install the NEW circlip.

Pack bearing area with grease (included with the new boot kit).

NOTE: Do not use or add other grease.

FRONT DIFFERENTIAL

Front Differential Removal

Drain the differential. Refer to *PERIODIC MAINTENANCE PROCEDURES* subsection.

Remove both drive shafts. See procedure in this subsection.

Remove heavy duty front bumper (**X and XT models**) with front fascia.

Remove the radiator. Refer to *COOLING SYSTEM* subsection.

Remove bolts that attach winch bracket to the frame (**XT models**).

Remove front screw and rear nut securing the LH lower differential support.

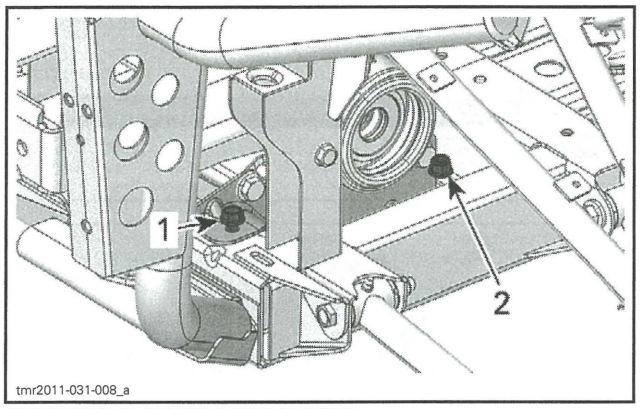

FROM THE LEFT SIDE OF VEHICLE
1. *Front retaining screw*
2. *Rear retaining nuts*

Remove the upper differential bolts.

Remove nuts securing the lower bolts. Pull bolts to free the left support.

NOTE: Differential removal is required to remove lower bolts and LH lower differential support.

Remove the large clamp from the propeller shaft rubber boot.

Remove the differential from the front of vehicle.

Remove yoke if required.

Front Differential Inspection (Assembled)

Check if oil seals are brittle, hard or damaged. Replace if necessary.

Backlash Inspection

Using a dial indicator and the BACKLASH MEASUREMENT TOOL (P/N 529 035 665), measure the backlash.

Place the backlash measurement tool at the end of pinion gear.

From center of bolt, measure 25.4 mm (1 in) and scribe a mark on the tab.

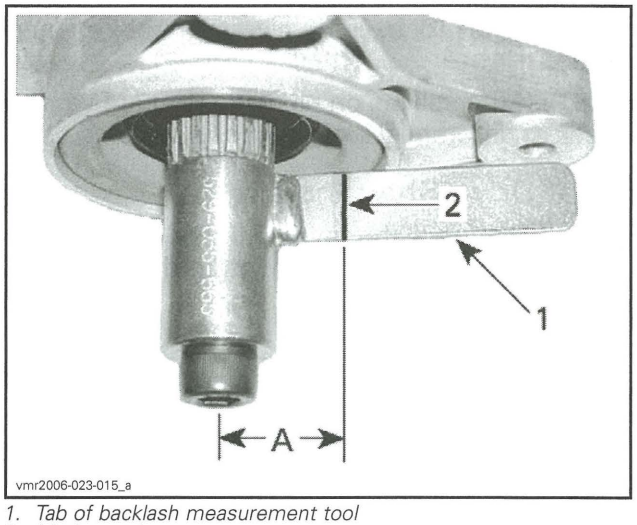

1. *Tab of backlash measurement tool*
2. *Mark on tab*

A. 25.4 mm (1 in)

Position the dial indicator tip against the tab at a 90° angle and right on the previously scribed mark.

Gently, move the tab back and forth. Note the result.

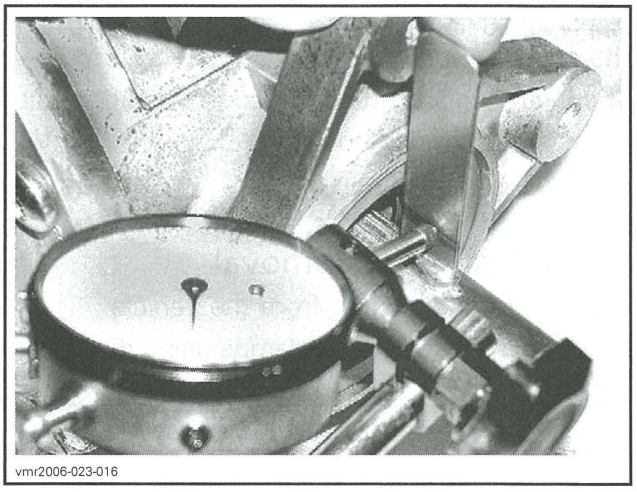

Rotate pinion gear 1/2 turn and check backlash again. Note the result.

Rotate pinion gear 1 turn and check backlash again.

BACKLASH SPECIFICATION
0.05 mm (.002 in) to 0.36 mm (.014 in)

If backlash is out of specification, split front differential housing and adjust shim thickness as per following guideline.

BACKLASH ADJUSTMENT GUIDELINE	
BACKLASH MEASUREMENT	WHAT TO DO
Below 0.05 mm (.002 in)	Add shim(s) and recheck backlash
Above 0.36 mm (.014 in)	Remove shim(s) and recheck backlash

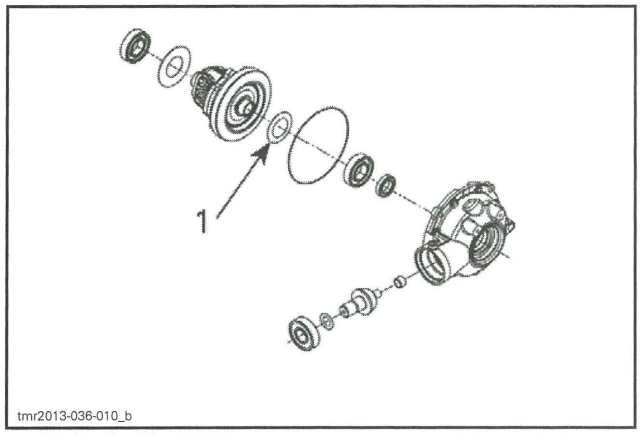

1. Backlash shim

Preload Inspection

Screw the propeller shaft adaptor bolt in pinion gear.

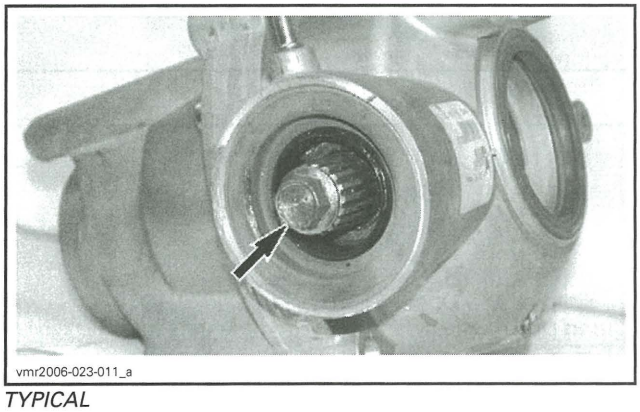

TYPICAL

Using a needle torque wrench, measure the drag torque.

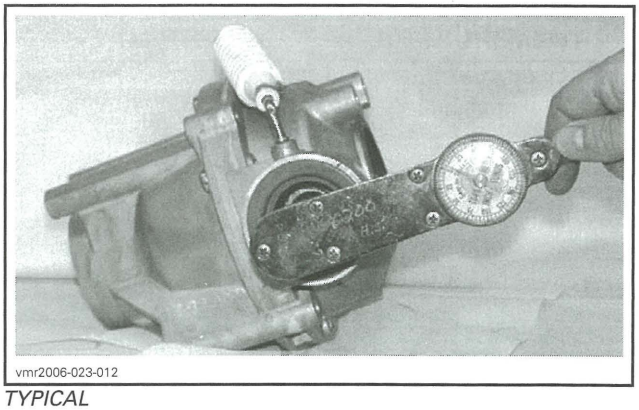

TYPICAL

PRELOAD SPECIFICATION
0.06 N•m (.5 lbf•**in**) to 0.50 N•m (4 lbf•**in**)

If preload is out of specification, split front differential housing and adjust shim thickness as per following guideline.

PRELOAD GUIDELINE	
PRELOAD MEASUREMENT	WHAT TO DO
Below 0.06 N•m (.5 lbf•**in**)	Add shim(s) and recheck preload
Above 0.50 N•m (4 lbf•**in**)	Remove shim(s) and recheck preload

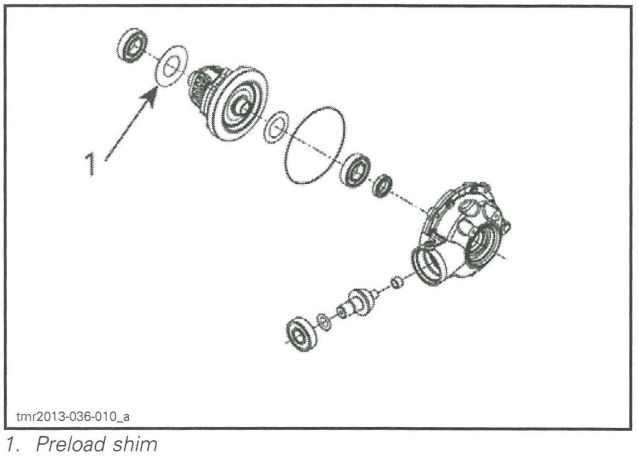

1. Preload shim

Front Differential Disassembly

Visco-Lok Carrier/Ring Gear

Unscrew the differential housing screws **no. 1**, then separate half housings.

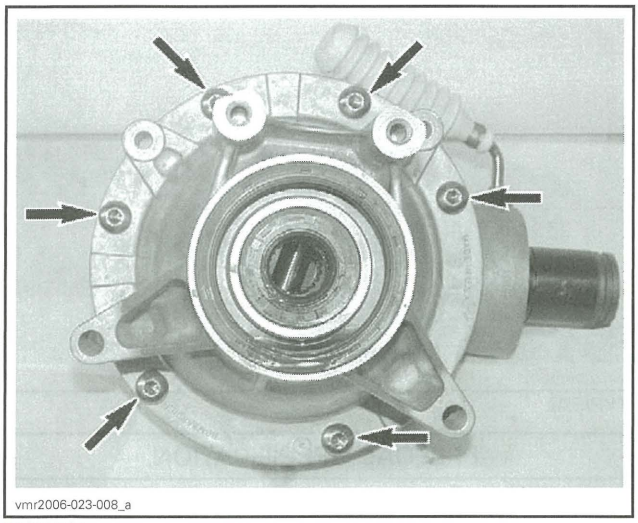
vmr2006-023-008_a

TYPICAL

NOTE: Be careful to keep track of shims **no. 2** on each end of the Visco-Lok carrier **no. 3**.

Extract Visco-Lok carrier out of half housing.

Pinion Gear

Remove and discard oil seal **no. 4**.

Unscrew the pinion nut **no. 5**. Use the SPANNER SOCKET (P/N 529 035 649).

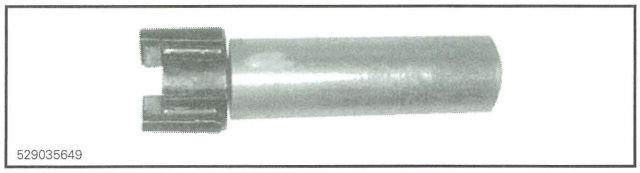
529035649

NOTE: The pinion nut is LH threaded. Unscrew by turning clockwise.

Remove the bearing **no. 6** at the same time as the pinion gear **no. 7**. Be careful to keep track of shims **no. 8**. Discard bearing.

The pinion gear and bearing can be easily removed using the following suggested tool:

PART	QTY
Pipe: 89 mm (3-1/2 in) dia. x 127 mm (5 in)	1
Threaded rod: M12 x 1.25 x 178 mm (7 in)	1
M12 x 1.25 nut	3
Flat bar	1

Remove and discard the needle bearing **no. 9**.

Front Differential Assembly

Adjustment is required when any of the following part is changed.

- Pinion gear
- Visco-Lok carrier
- Housing.

As a preliminary setup, install shims according to the following table.

RECOMMENDED SHIM THICKNESS	
PINION GEAR (1)	1.67 mm ± 0.04 mm (.066 in ± .002 in)
BACKLASH	0.5 mm (.02 in) (as a preliminary adjustment)
PRELOAD	

(1) The pinion gear shim thickness (**no. 8**) should never be altered. Any adjustment should be done on preload and/or backlash shims (**no. 2** and **no. 14**).

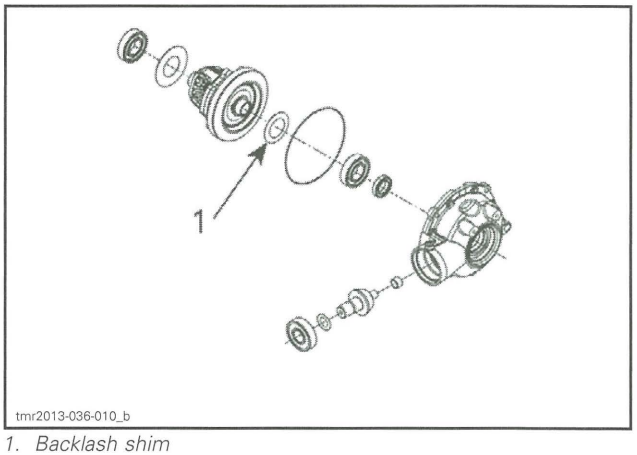

tmr2013-036-010_b

1. Backlash shim

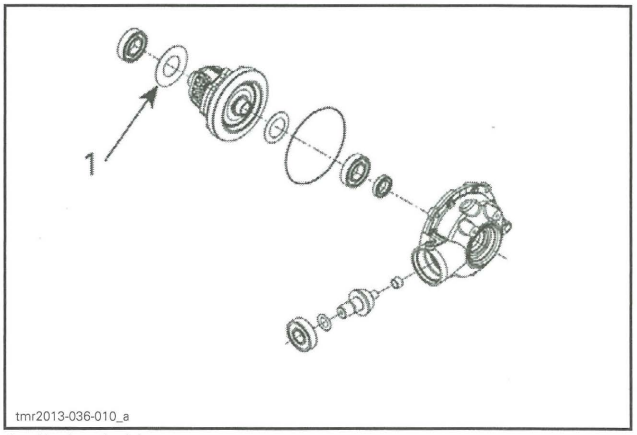

tmr2013-036-010_a

1. Preload shim

Prior to finalizing assembly, proceed in this order:

- Temporarily assemble front differential using recommended torques.
- Do not apply thread locker product.
- Do not install a new pinion nut.
- Check backlash.
- Check preload.

Visco-Lok Carrier/Ring Gear

To assemble, reverse the removal procedure. Pay attention to the following.

Check condition of seal **no. 10**. Replace if damage.

Install new bearings **no. 11**.

Tighten differential housing screws **no. 1**.

PART	TORQUE
Differential housing screws	33 N•m ± 3 N•m (24 lbf•ft ± 2 lbf•ft)

Pinion Gear

To install, reverse the removal procedure. Pay attention to the following details.

Replace the O-ring **no. 13**.

Install the shim(s) **no. 8** then the ball bearing **no. 6**.

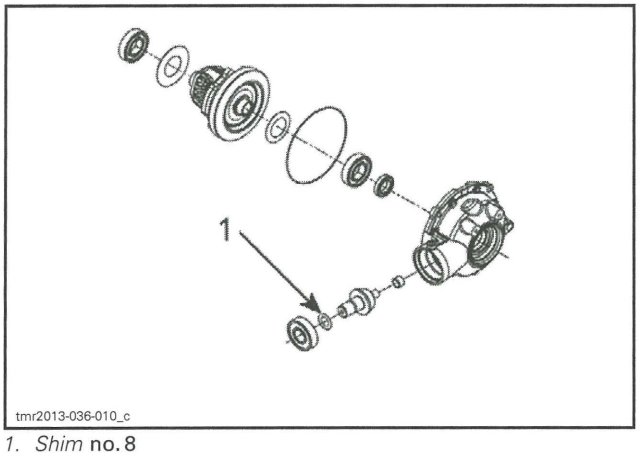

1. Shim **no. 8**

Install a new needle bearing **no. 9**.

Apply LOCTITE 277 (P/N 293 800 073) to pinion nut **no. 5**.

NOTE: If a new pinion nut is used, a self-locking product is already applied, do not use Loctite 277.

Install and tighten the pinion nut.

PART	TORQUE
Pinion nut (LH THREADS)	180 N•m ± 15 N•m (133 lbf•ft ± 11 lbf•ft)

Lubricate oil seal **no. 4**.

Finalize assembly:

- Apply thread locker products where applicable.
- Torque fasteners as per tables.

Front Differential Installation

The installation is the reverse of the removal procedure. However, pay attention to the following.

When inserting the small portion of propeller shaft into propeller shaft boot, make sure both parts of propeller shaft are well indexed.

Tighten front differential nuts as per following sequence.

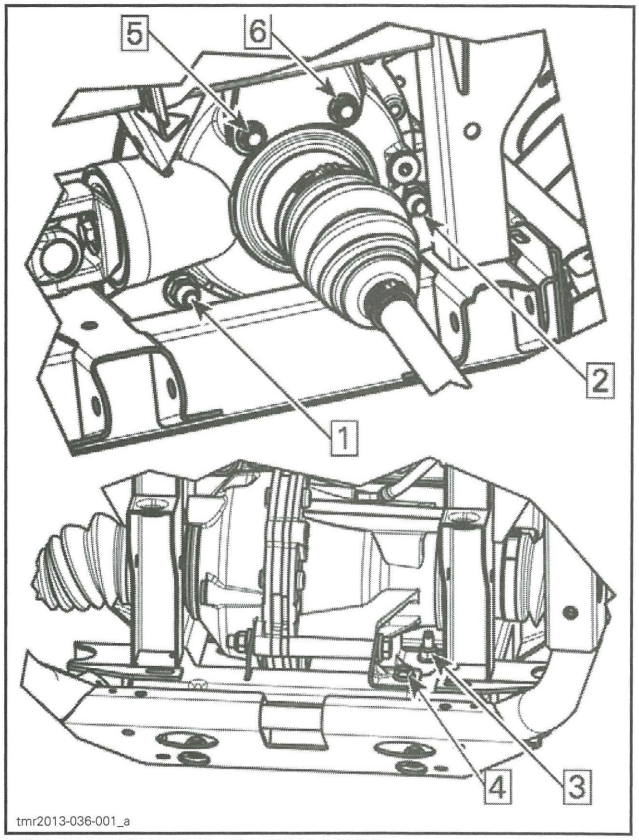

TOP ILLUSTRATION: RH SIDE VIEW
BOTTOM ILLUSTRATION: FRONT VIEW

PARTS	TORQUE
Differential retaining nuts	70 N•m ± 5 N•m (52 lbf•ft ± 4 lbf•ft)
Differential upper bolts	24.5 N•m ± 3.5 N•m (18 lbf•ft ± 3 lbf•ft)
Differential support nut	24.5 N•m ± 3.5 N•m (18 lbf•ft ± 3 lbf•ft)
Differential support bolt	24.5 N•m ± 3.5 N•m (18 lbf•ft ± 3 lbf•ft)

Refill the front differential with recommended oil. Refer to *PERIODIC MAINTENANCE PROCEDURES* subsection.

FRONT PROPELLER SHAFT

Front Propeller Shaft Removal

Remove the RH lateral console panel.

Remove propeller shaft screws (on engine and differential).

Remove lower and upper differential bolts.

Move the differential forwards.

Dislodge the propeller shaft from the engine and differential.

Remove front propeller shaft.

Front Propeller Shaft Inspection

Inspect if propeller shaft is not bent or twisted.

Check propeller shaft splines for wear or damage.

Check if propeller shaft bellows is pierced or brittle.

Front Propeller Shaft Installation

Installation is the reverse of removal procedure. However, pay attention to the following.

Apply XPS SYNTHETIC GREASE (P/N 293 550 010) to splines on engine side.

PARTS	TORQUE
Propeller shaft screw (differential side)	75 N•m ± 15 N•m (55 lbf•ft ± 11 lbf•ft)
Propeller shaft screw (engine side)	75 N•m ± 15 N•m (55 lbf•ft ± 11 lbf•ft) + LOCTITE 271 (RED) (P/N 293 800 005)

PROPELLER SHAFT U-JOINTS

Propeller Shaft U-Joint Removal

Remove internal snap ring from bearing caps.

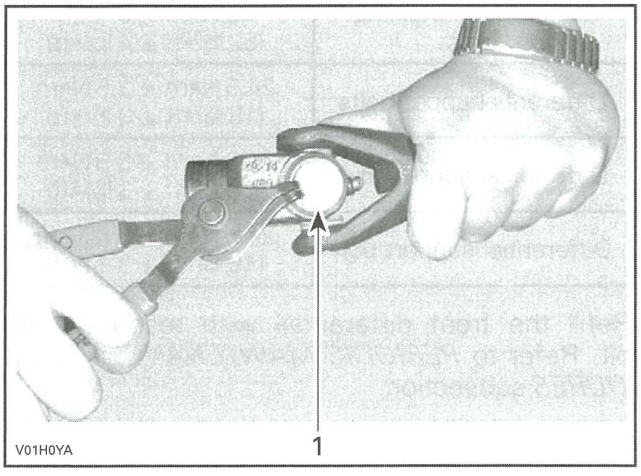

1. Snap ring

Support inner yoke in vice and drive other yoke down with a soft hammer.

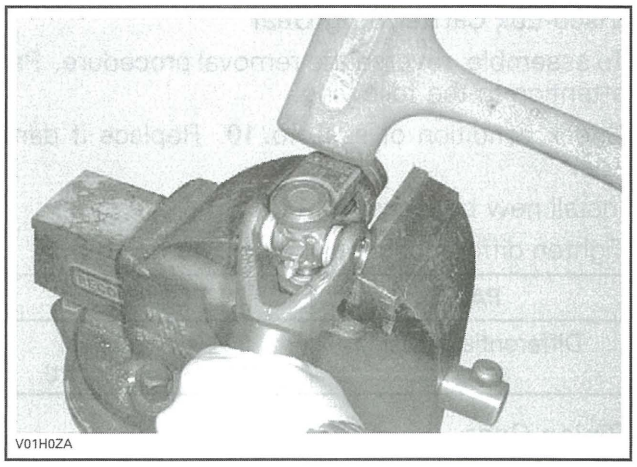

Support U-joint in vice and drive inner yoke down to remove remaining bearing caps.

Remove U-joint cross.

Propeller Shaft U-Joint Installation

Install new U-joint in inner yoke.

NOTE: Position propeller shaft U-joint as shown for proper grease fitting location.

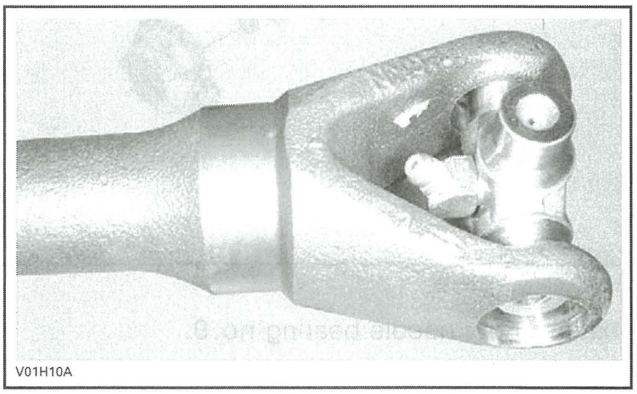

Install bearing caps. Use a vise to insert bearing caps.

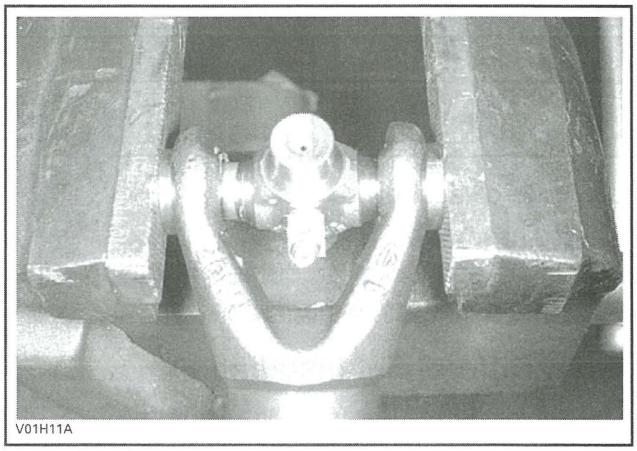

Using a suitable pusher, fully seat bearing cap on one side.

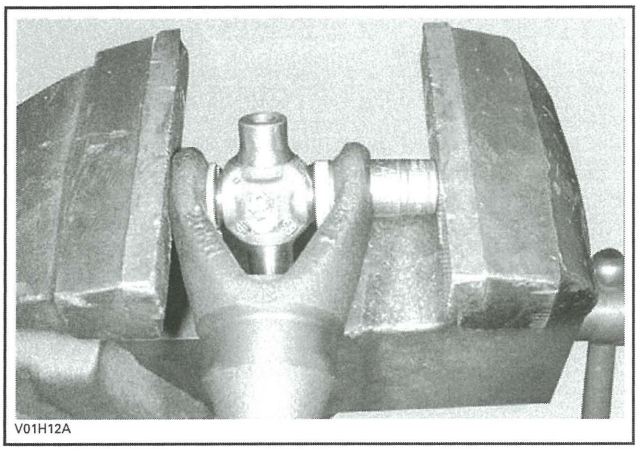
V01H12A

Install snap ring.

Grease U-joints. Refer to *PERIODIC MAINTENANCE PROCEDURES* subsection.

REAR DRIVE

SERVICE TOOLS

Description	Part Number	Page
BACKLASH MEASUREMENT TOOL	529 035 665	340
CV BOOT CLAMP PLIER	529 036 120	337
CV JOINT EXTRACTOR	529 036 005	337
SPANNER SOCKET	529 035 649	342

SERVICE PRODUCTS

Description	Part Number	Page
LOCTITE 271 (RED)	293 800 005	338
LOCTITE 277	293 800 073	343
XPS SYNTHETIC GREASE	293 550 010	336, 338

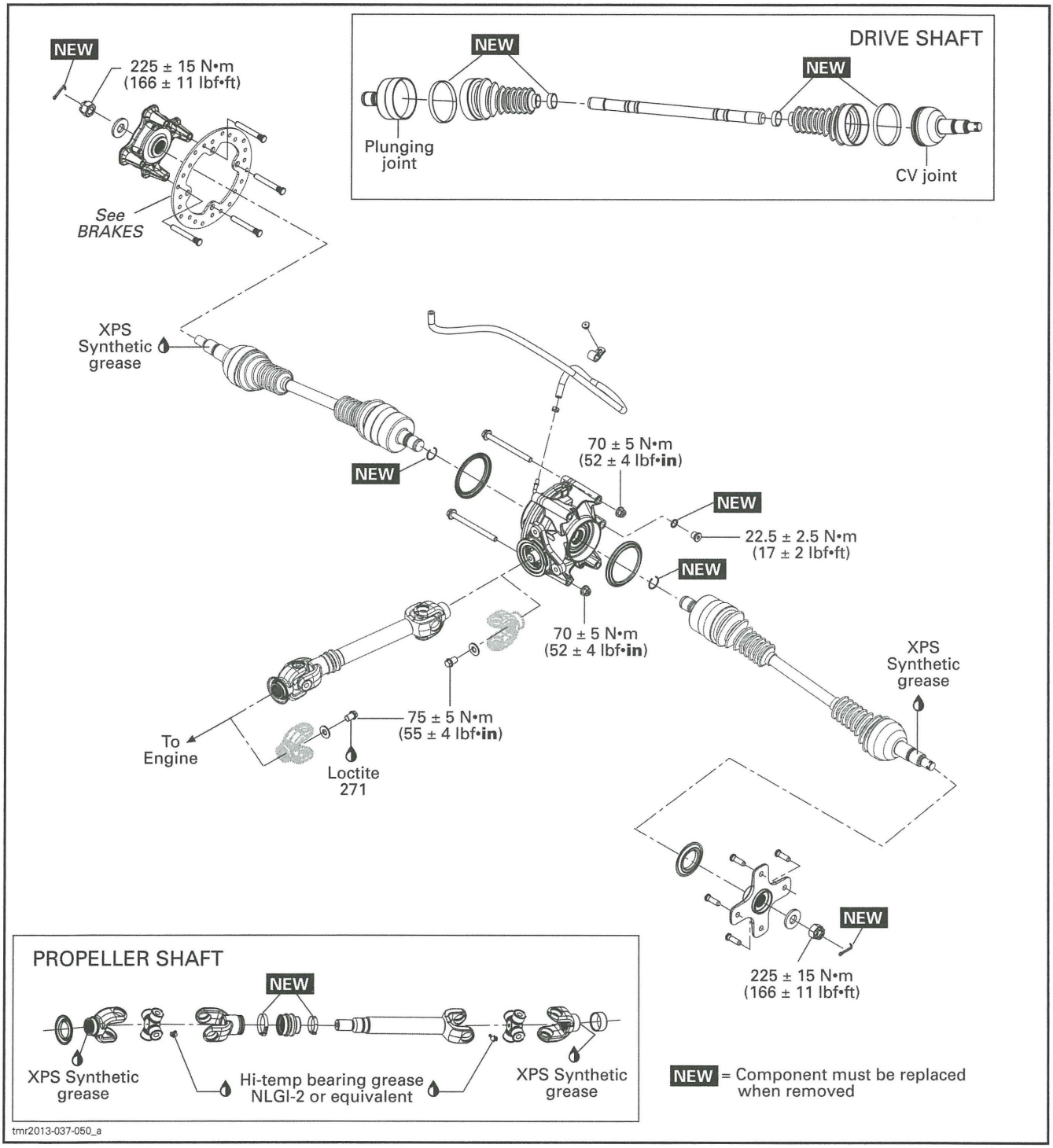

tmr2013-037-050_a

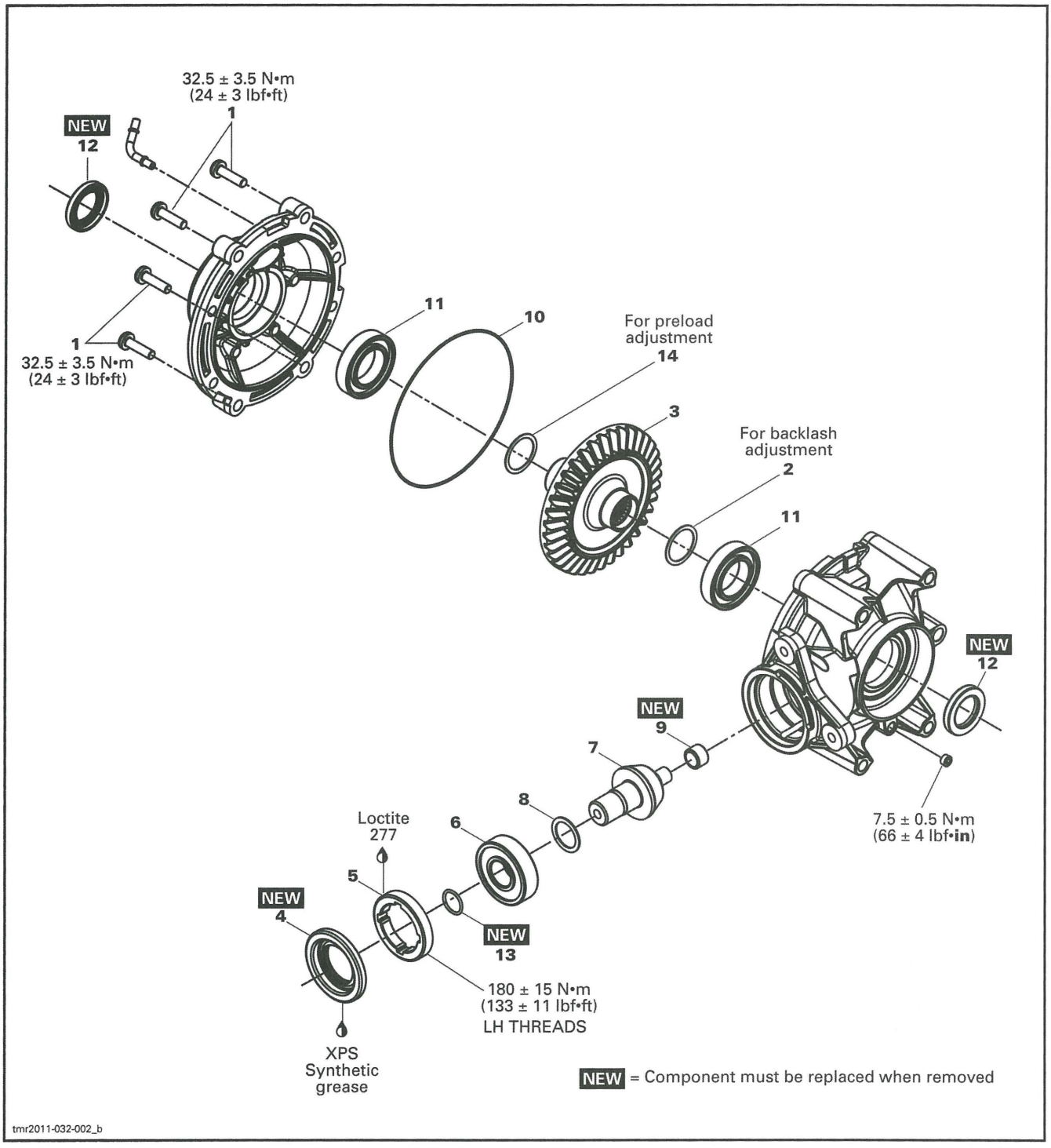

tmr2011-032-002_b

PROCEDURES

WHEEL HUB

Wheel Hub Removal

Lift and support vehicle. Refer to *INTRODUCTION* section for proper procedure.

Remove the wheel.

Remove the following parts:
- Cotter pin
- Wheel hub nut
- Belleville washer.

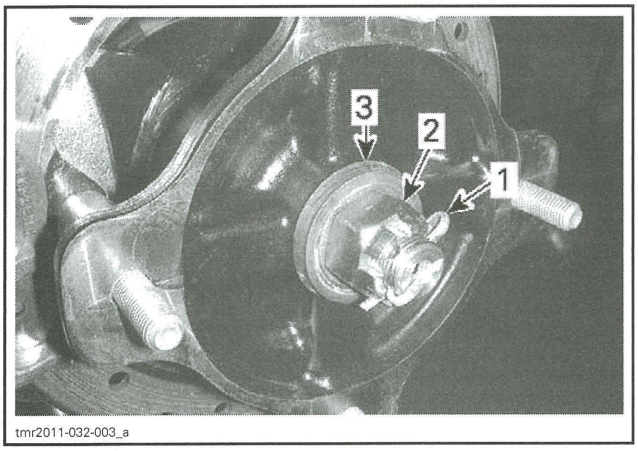

1. Cotter pin
2. Wheel hub nut
3. Belleville washer

NOTE: On RH side, remove also the brake caliper.

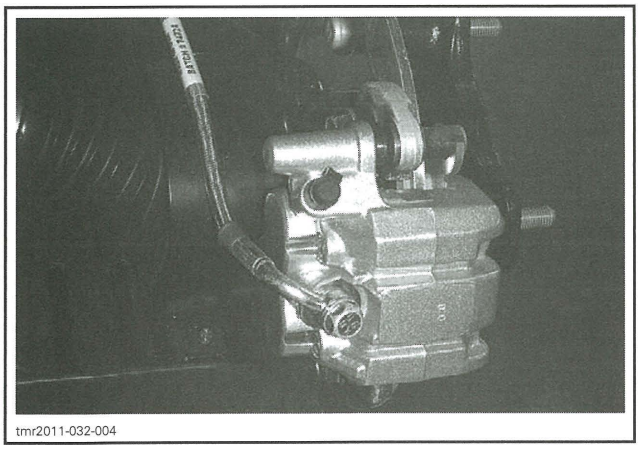

Remove wheel hub.

Wheel Hub Inspection

Check wheel hub for cracks or other damages.

Check inner splines for wear or other damages.

If any damage is detected on wheel hub, replace it with a new one.

Check wear ring. If it is loose on hub or deformed, replace the wear ring.

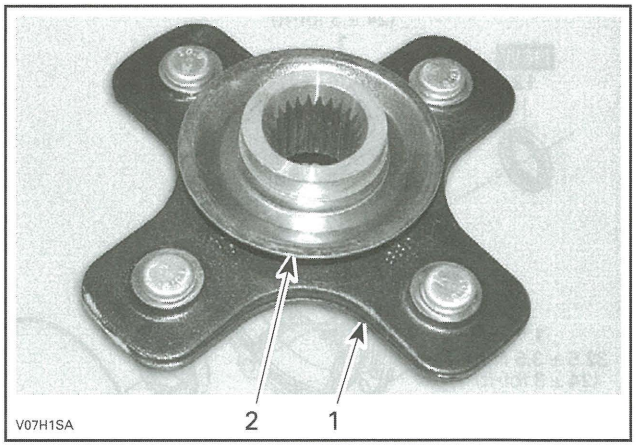

TYPICAL – LH WHEEL HUB SHOWN
1. Wheel hub
2. Wear ring

Wheel Hub Installation

The installation is the reverse of removal procedure. Pay attention to the following.

Apply XPS SYNTHETIC GREASE (P/N 293 550 010) on drive shaft splines.

Install Belleville washer with its domed side outwards.

PART	TORQUE
Wheel hub nut	225 N•m ± 15 N•m (166 lbf•ft ± 11 lbf•ft)

NOTE: Tighten further castellated nut if required to align grooves with drive shaft hole.

Install a **NEW** cotter pin.

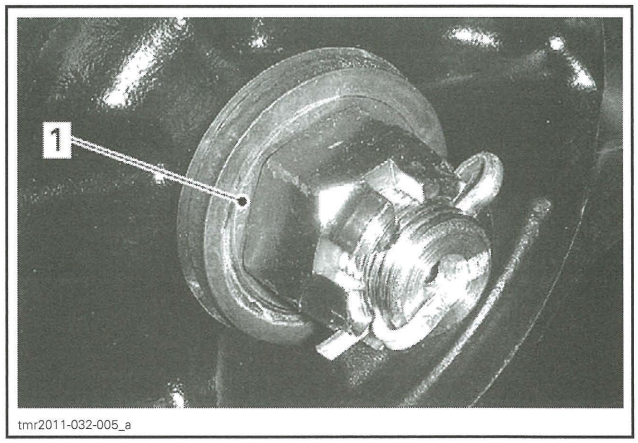

1. Domed side here

DRIVE SHAFT

Drive Shaft Removal

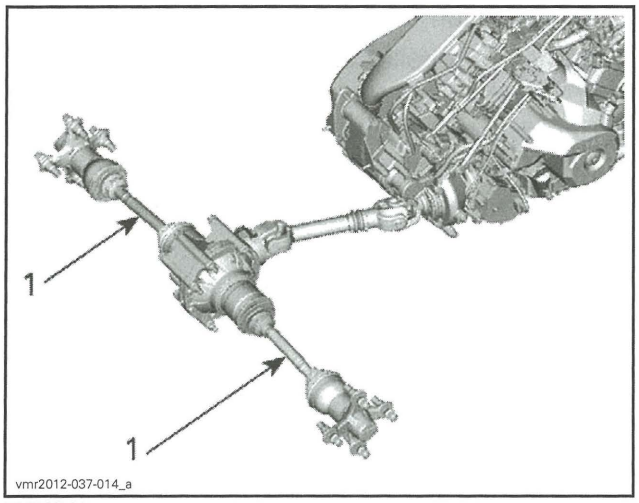

TYPICAL
1. Drive shafts

Lift and support vehicle. Refer to *INTRODUCTION* section for proper procedure.

Remove the wheel hub. See procedure in this subsection.

Remove trailing arm. Refer to *REAR SUSPENSION*.

Strongly pull drive shaft out of final drive.

Drive Shaft Inspection

Inspect the condition of boots. If there is any damage or evidence of leaking lubricant, replace them. Refer to *DRIVE SHAFT BOOT*.

Check shaft splines. Replace drive shaft if necessary.

Check dust shield on drive shaft end. Replace if necessary.

Drive Shaft Installation

The installation is the reverse of the removal procedure. However, pay attention to the following.

Install a NEW stop ring.

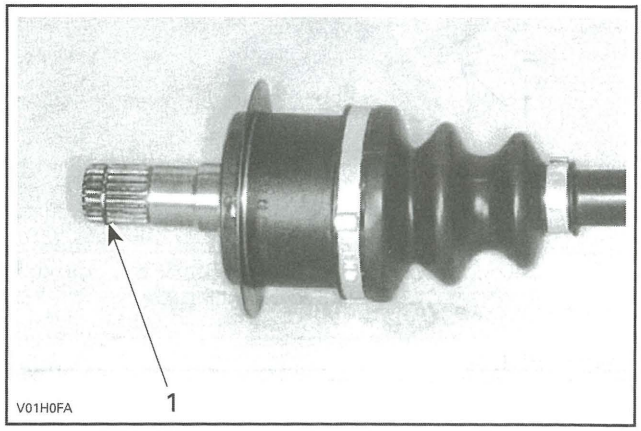

1. Stop ring

After drive shaft insertion in rear final drive, validate if properly locked.

DRIVE SHAFT BOOT

Drive Shaft Boot Removal

Remove the drive shaft from vehicle. See procedure in this subsection.

Remove drive shaft boot clamps using the following tools:

TOOL	
CV BOOT CLAMP PLIER (P/N 529 036 120)	

Dislodge the large boot end.

Separate the joint from the shaft. Two procedures can be done.

Without the Special Tool

Clamp joint housing in a vise.

Align shaft with joint.

Pull hard on shaft to remove from joint.

Remove boot from drive shaft.

Remove and discard the circlip. A new one is included in the boot kit.

With the Special Tool

Place drive shaft in vice with the joint downward.

Install the CV JOINT EXTRACTOR (P/N 529 036 005) on bearing.

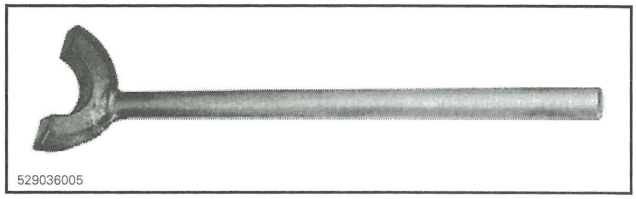

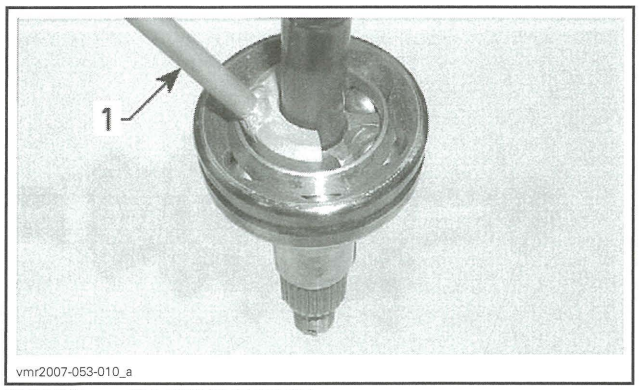

TYPICAL — CV JOINT SHOWN
1. Joint extractor tool

With an hammer, hit on the tool to separate joint from shaft.

When joint and shaft are separated, remove boot from drive shaft.

Remove and discard the circlip. A new one is included in the boot kit.

Remove drive shaft boot.

Drive Shaft Boot Installation

For installation, reverse the removal procedure. Pay attention to the following.

Pack bearing area with grease (included with the new boot kit).

NOTE: Do not use any other grease.

PROPELLER SHAFT

Propeller Shaft Removal

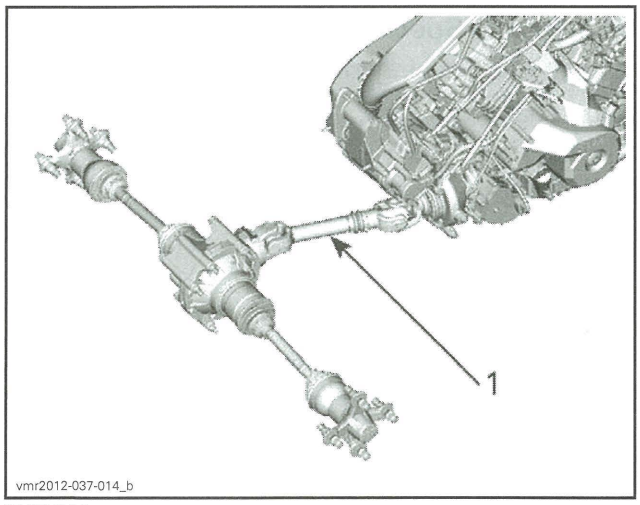

TYPICAL
1. Propeller shaft

1. Remove the fuel tank. Refer to *FUEL TANK* subsection.
2. Remove propeller shaft screw from gearbox output shaft.
3. Lift and support vehicle. Refer to *INTRODUCTION* section for proper procedure.
4. Remove propeller shaft screw from rear final drive yoke.
5. Remove rear final drive bolts. Refer to *REAR FINAL DRIVE* in this subsection.
6. Move the rear final drive rearward to dislodge the propeller shaft.
7. Dislodge the propeller shaft from the engine.
8. Remove the propeller shaft.

Propeller Shaft Inspection

Inspect if propeller shaft is not bent or twisted.

Check propeller shaft splines for wear or damage.

Check if propeller shaft bellows is pierced or brittle.

Propeller Shaft Installation

Installation is essentially the reverse of removal procedure. Pay attention to the following details.

Apply XPS SYNTHETIC GREASE (P/N 293 550 010) to splines.

PARTS	TORQUE
Propeller shaft screw (final drive side)	75 N•m ± 5 N•m (55 lbf•ft ± 4 lbf•ft)
Propeller shaft screw (engine side)	75 N•m ± 5 N•m (55 lbf•ft ± 4 lbf•ft) + LOCTITE 271 (RED) (P/N 293 800 005)

PROPELLER SHAFT U-JOINTS

Propeller Shaft U-Joint Removal

Remove internal snap ring from bearing caps.

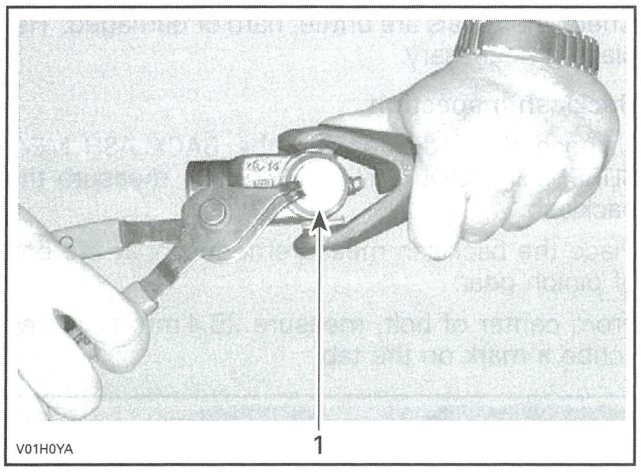

1. Snap ring

Support inner yoke in vice and drive other yoke down with a soft hammer.

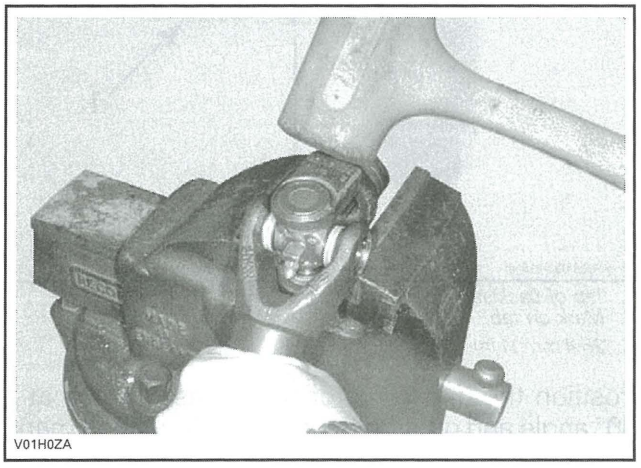

Support U-joint in vice and drive inner yoke down to remove remaining bearing caps.

Remove U-joint cross.

Propeller Shaft U-Joint Installation

Install new U-joint in inner yoke.

NOTE: Position propeller shaft U-joint as shown for proper grease fitting location.

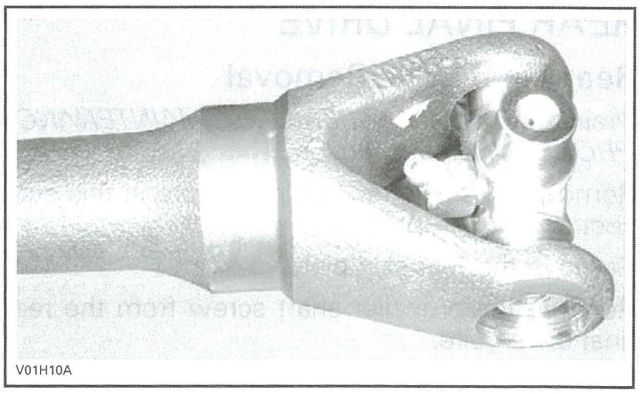

Install bearing caps. Use a vise to push bearing caps.

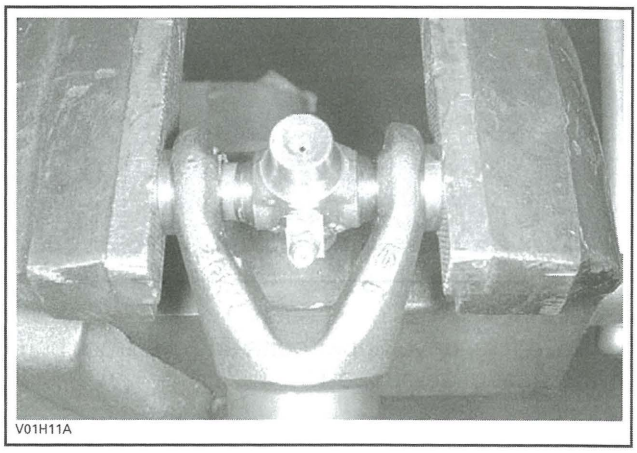

Using a suitable pusher, fully seat bearing cap on one side.

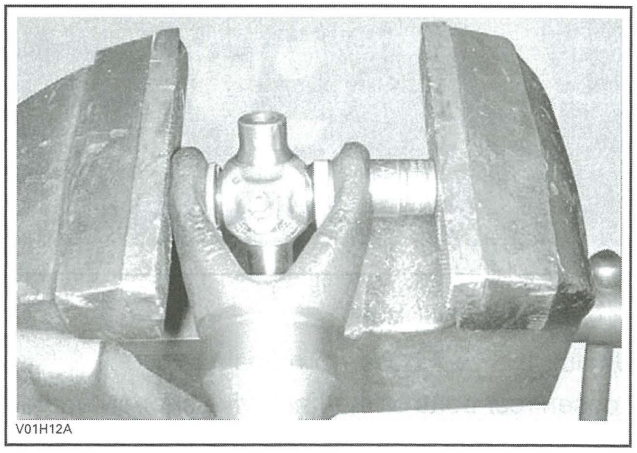

Install snap ring.

Complete installation for the other bearing caps.

Grease U-joint. Refer to *PERIODIC MAINTENANCE PROCEDURES* subsection.

REAR FINAL DRIVE

Rear Final Drive Removal

Drain oil. Refer to *PERIODIC MAINTENANCE PROCEDURES* subsection.

Remove drive shafts. See procedure in this subsection.

Remove the rear skid plate.

Remove the propeller shaft screw from the rear final drive yoke.

Remove final drive lower bolts.

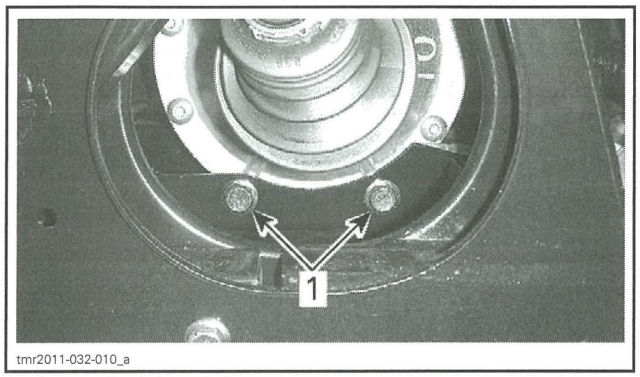

1. Lower final drive bolts

Remove final drive upper bolts and the front bolts of the final drive support.

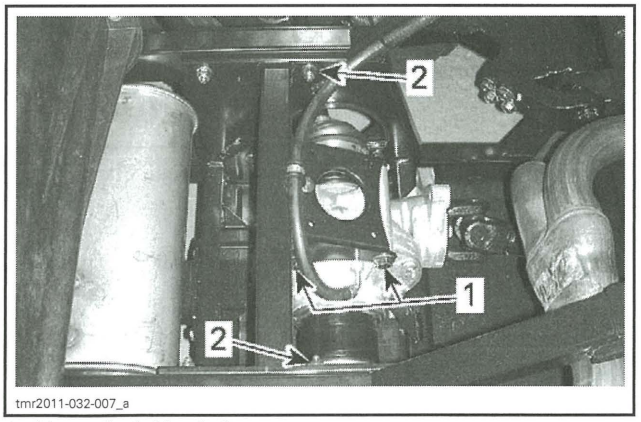

1. Upper final drive bolts
2. Final drive support front bolts

Unplug the vent hose from final drive.

Loosen rear bolts of the final drive support and tilt the support rearward to make room.

Remove the final drive.

Rear Final Drive Inspection (Assembled)

Turn rear final drive gear with a finger; it should turn smoothly. Replace if necessary.

Check if oil seals are brittle, hard or damaged. Replace if necessary.

Backlash Inspection

Using a dial indicator and the BACKLASH MEASUREMENT TOOL (P/N 529 035 665), measure the backlash.

Place the backlash measurement tool at the end of pinion gear.

From center of bolt, measure 25.4 mm (1 in) and scribe a mark on the tab.

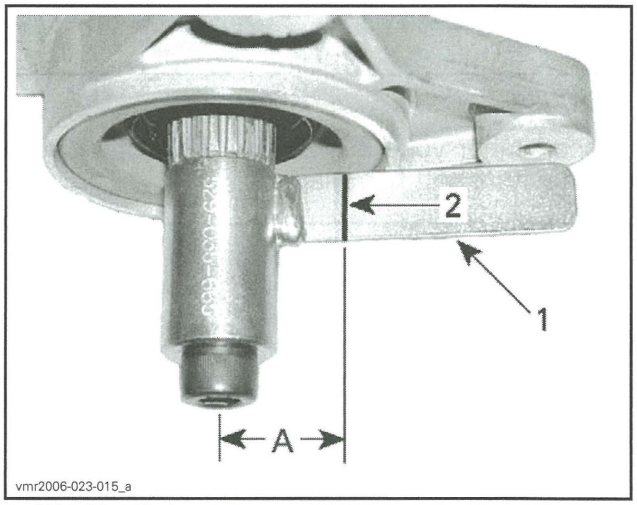

1. Tab of backlash measurement tool
2. Mark on tab
A. 25.4 mm (1 in)

Position the dial indicator tip against the tab at a 90° angle and right on the previously scribed mark.

Gently, move the tab back and forth. Note the result.

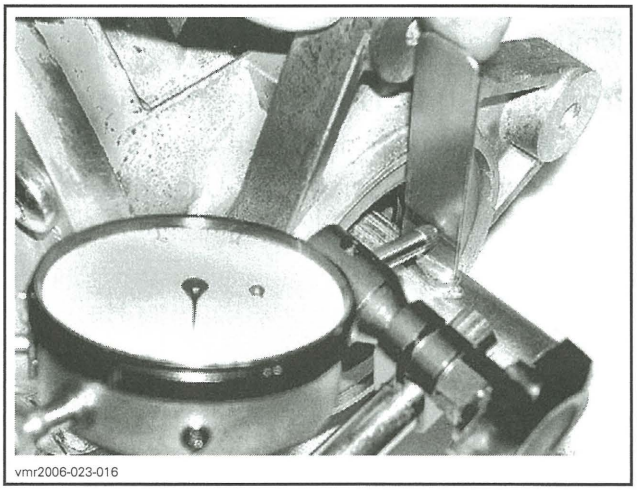

Rotate pinion gear 1/2 turn and check backlash again. Note the result.

Rotate pinion gear 1 turn and check backlash again.

BACKLASH SPECIFICATION
.05 mm - .36 mm (.002 in - .014 in)

If backlash is out of specification, split final drive housing and adjust shim thickness as per following guideline.

BACKLASH ADJUSTMENT GUIDELINE	
BACKLASH MEASUREMENT	WHAT TO DO
Below 0.05 mm (.002 in)	Add shim(s) and recheck backlash
Above 0.36 mm (.014 in)	Remove shim(s) and recheck backlash

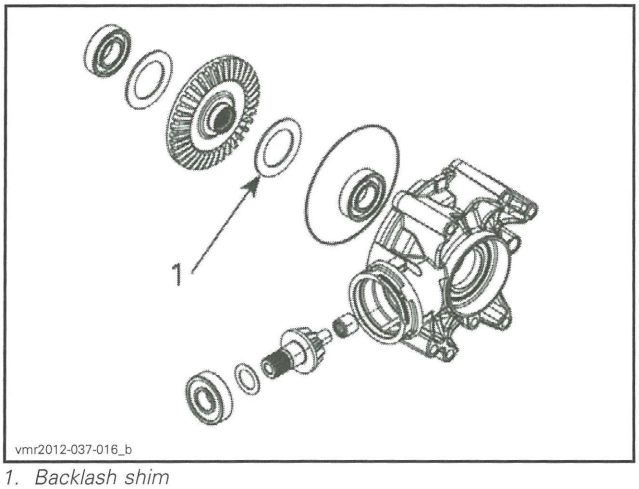

1. Backlash shim

Preload Inspection

Screw the propeller shaft adaptor bolt in pinion gear.

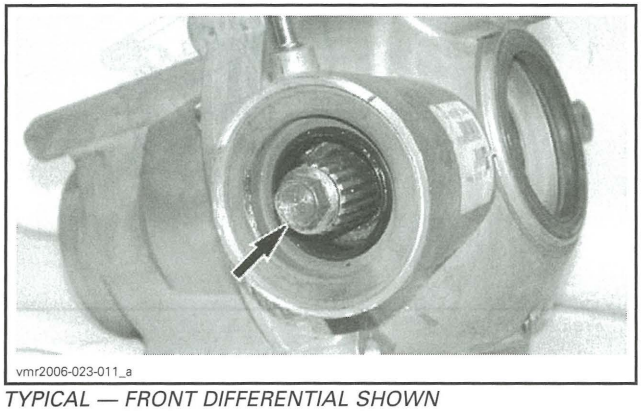

TYPICAL — FRONT DIFFERENTIAL SHOWN

Using a needle torque wrench, measure the drag torque.

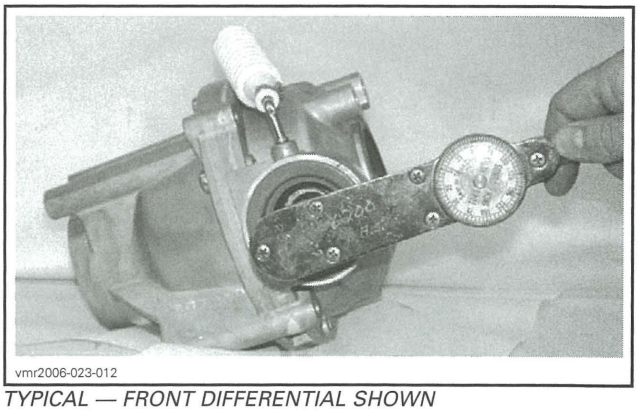

TYPICAL — FRONT DIFFERENTIAL SHOWN

PRELOAD SPECIFICATION
.06 N•m - .5 N•m (1 lbf•**in** - 4 lbf•**in**)

If preload is out of specification, split final drive housing and adjust shim thickness as per following guideline.

PRELOAD GUIDELINE	
PRELOAD MEASUREMENT	WHAT TO DO
Below 0.06 N•m (.5 lbf•**in**)	Add shim(s) and recheck preload
Above 0.50 N•m (4 lbf•**in**)	Remove shim(s) and recheck preload

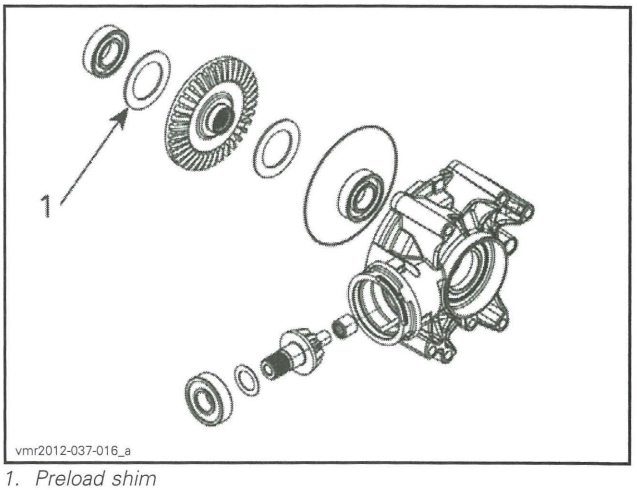

1. Preload shim

Rear Final Drive Disassembly

Ring Gear

Unscrew the final drive housing screws **no. 1**.

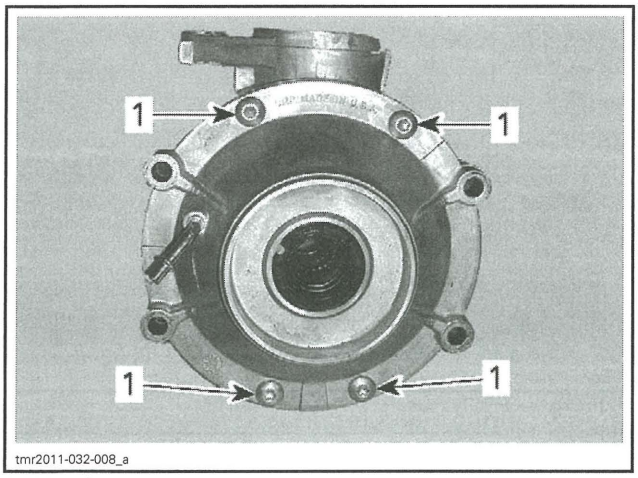

1. Housing screws

Split final drive housings.

NOTE: Be careful to keep track of shims **no. 2** on ring gear **no. 3**.

Extract ring gear out of half housing.

Pinion Gear

Remove and discard oil seal **no. 4**.

Unscrew the pinion nut **no. 5**. Use the SPANNER SOCKET (P/N 529 035 649).

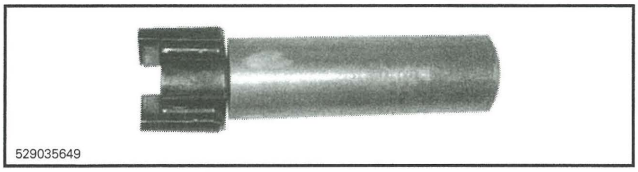

NOTE: The pinion nut is LH threaded. Unscrew by turning clockwise.

Remove the bearing **no. 6** at the same time as the pinion gear **no. 7**. Be careful to keep track of shims **no. 8**. Discard bearing.

The pinion gear and bearing can be easily removed using the following suggested tool:

PART	QTY
Pipe: 89 mm (3-1/2 in) dia. x 127 mm (5 in)	1
Threaded rod: M12 x 1.25 x 178 mm (7 in)	1
M12 x 1.25 nut	3
Flat bar	1

Remove and discard the needle bearing **no. 9**.

Rear Final Drive Assembly

Adjustment is required when any of the following part is changed.

- Pinion gear
- Ring gear
- Housing.

As a preliminary setup, install shims according to the following table.

RECOMMENDED SHIM THICKNESS	
PINION GEAR (1)	1.67 mm ± 0.04 mm (.066 in ± .002 in)
BACKLASH	0.5 mm (.02 in) (as a preliminary adjustment)
PRELOAD	

(1) The pinion gear shim thickness (**no. 8**) should never be altered. Any adjustment should be done on preload and/or backlash shims (**no. 2** and **no. 14**).

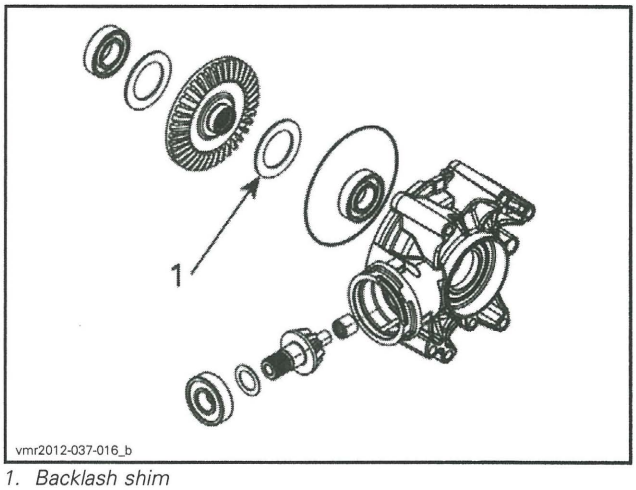

1. Backlash shim

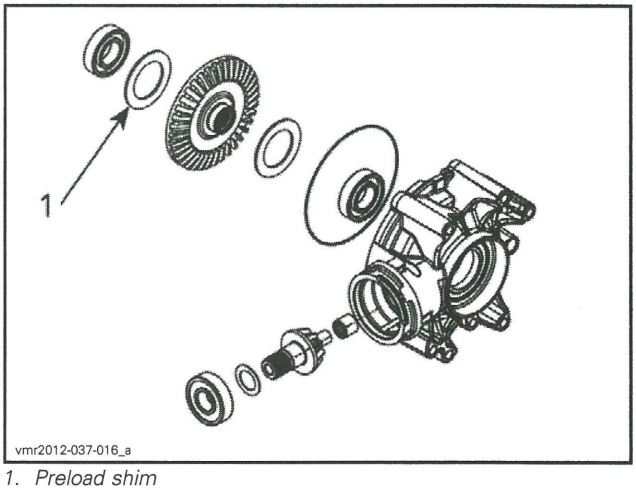

1. Preload shim

Prior to finalizing assembly, proceed in this order:

- Temporarily assemble final drive using recommended torques.
- Do not apply thread locker product.
- Do not install a new pinion nut.
- Check backlash.
- Check preload.

Ring Gear

To assemble, reverse the removal procedure. Pay attention to the following.

Check condition of seal **no. 10**. Replace if damaged.

Install new bearings **no. 11**.

Tighten final drive housing screws **no. 1**.

PART	TORQUE
Final drive housing screws	32.5 N•m ± 3.5 N•m (24 lbf•ft ± 3 lbf•ft)

Pinion Gear

To install, reverse the removal procedure. Pay attention to the following.

Replace the O-ring **no. 13**.

Install the shim(s) **no. 8** then the ball bearing **no. 6**.

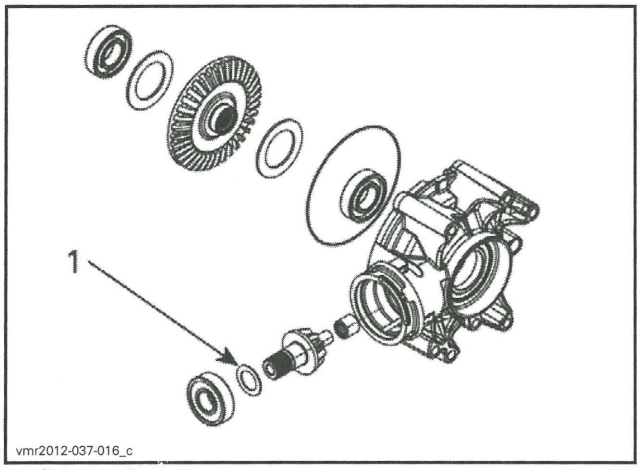

1. Shim **no. 8**

Install a new needle bearing **no. 9**.

Apply LOCTITE 277 (P/N 293 800 073) to pinion nut **no. 5**.

NOTE: If a new pinion nut is used, a self-locking product is already applied, do not use Loctite 277.

Install and tighten the pinion nut.

PART	TORQUE
Pinion nut (LH THREADS)	180 N•m ± 15 N•m (133 lbf•ft ± 11 lbf•ft)

Lubricate oil seal **no. 4**.

Finalize assembly:
- Apply thread locker products where applicable.
- Torque fasteners as per tables.

Rear Final Drive Installation

The installation is the reverse of the removal procedure.

PART	TORQUE
Final drive retaining nuts	70 N•m ± 5 N•m (52 lbf•ft ± 4 lbf•ft)

Refill the final drive with recommended oil. Refer to *PERIODIC MAINTENANCE PROCEDURES* subsection.

WHEELS AND TIRES

SERVICE PRODUCTS

Description	Part Number	Page
LOCTITE 767 (ANTISEIZE LUBRICANT)	293 800 070	346

PROCEDURES

TIRES

⚠ WARNING

Do not rotate tires. The front and rear tires have a different size. Respect direction of rotation when applicable.

Tire Pressure

⚠ WARNING

Tire pressure greatly affects vehicle handling and stability. Insufficient pressure may cause tire to deflate and rotate on wheel. Excessive pressure may burst the tire. Always follow recommended pressure.

Check pressure when tires are **cold** before using the vehicle. Tire pressure changes with temperature and altitude. Recheck pressure if one of these conditions has changed.

TIRE PRESSURE	FRONT	REAR
MIN.	69 kPa (10 PSI)	83 kPa (12 PSI)
MAX. (USE WHEN TOTAL LOAD IS GREATER THAN 180 KG (400 LB))	83 kPa (12 PSI)	152 kPa (22 PSI)

Tire Inspection

Check tire for presence of slits, bulges, wear or other damage. Replace if necessary.

Tire Replacement

Use an automotive tire changer to replace tires.

⚠ WARNING

- **Replace tires only with the same type and size as original tires.**
- **For unidirectional tread pattern, ensure that the tires are installed in the correct direction of rotation.**

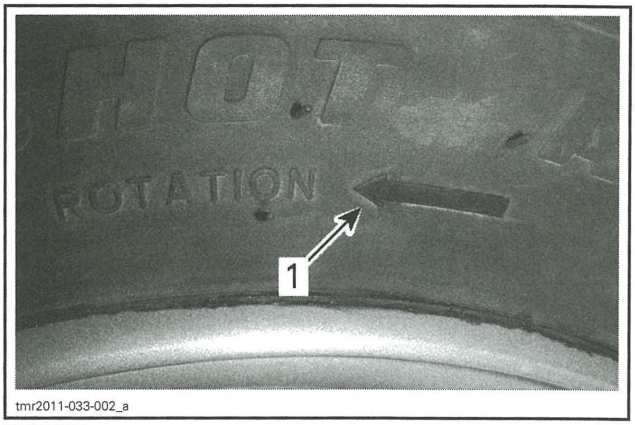

tmr2011-033-002_a

TYPICAL
1. Direction of rotation

Tire Mounting on Beadlock Wheels

X Models

NOTE: Tires should be mounted, by an experienced person, in accordance to good tire mounting practices using acceptable tire mounting equipment designed for the tire industry.

1. Mount the tire on wheel.
   1.1 On the opposite side of beadlock, apply the tire mounting lube on inner bead of tire and wheel to ensure proper seating when inflating.
   1.2 Mount the inner bead over the wheel.

   NOTICE **Mount tire from beadlock side only.**

   1.3 Seat the tire outer bead in the shoulder of the beadlock inner ring and center the tire.

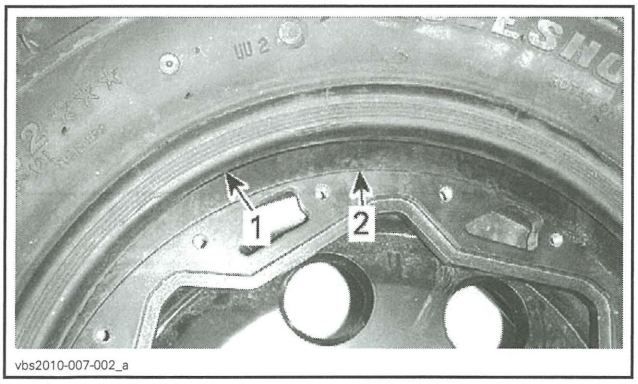

1. Tire outer bead
2. Beadlock inner ring shoulder

2. Place the beadlock clamp ring on the tire. Align the valve opening with valve.

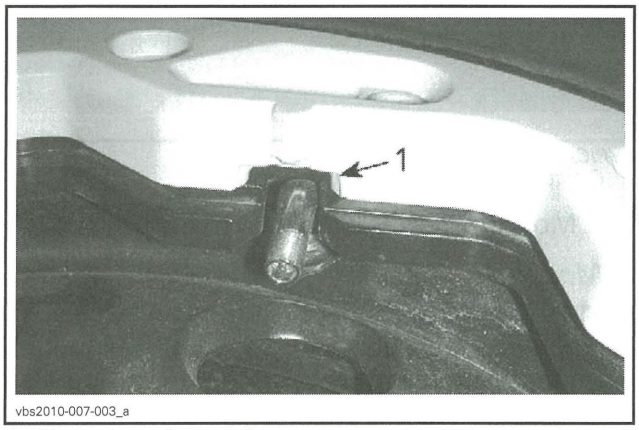

1. Clamp ring valve opening

3. Lubricate all beadlock screws with LOCTITE 767 (ANTISEIZE LUBRICANT) (P/N 293 800 070) or an equivalent product to prevent screw sticking.
4. Install all beadlock screws. To avoid cross threading, start all screws by hand.

NOTICE **Do not use an impact wrench for installing beadlock screws. The risk of screw breaking or screw stripping is high when using an impact wrench.**

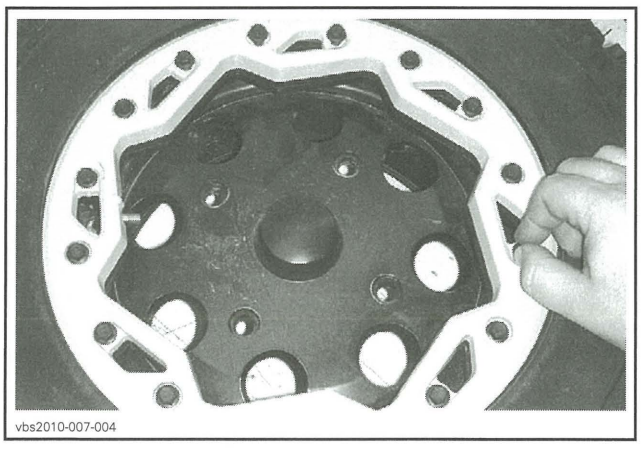

5. Tighten beadlock screws as per following specification and sequence.

NOTE: To ensure even pressure on the beadlock clamp ring, tighten screws **a few turns at a time.**

TIGHTENING TORQUE	
Beadlock screws (FIRST TORQUE)	3 N•m ± 1 N•m (27 lbf•**in** ± 9 lbf•**in**)

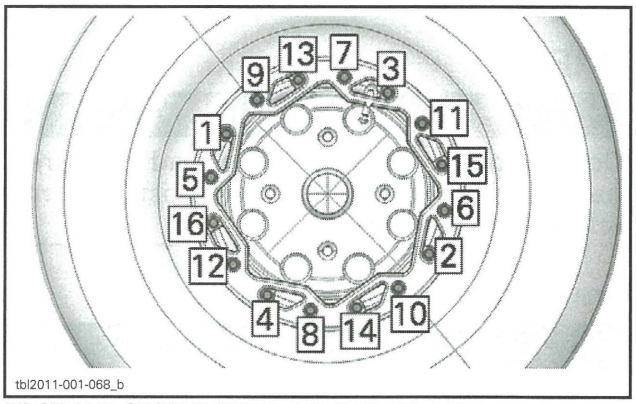

FIRST AND SECOND TIGHTENING SEQUENCE

6. At this time check if the tire is still centered on wheel. Reposition it if necessary.
7. Tighten beadlock screws as per the **second** torque using the same sequence.

TIGHTENING TORQUE	
Beadlock screws (SECOND TORQUE)	8 N•m ± 1 N•m (71 lbf•**in** ± 9 lbf•**in**)

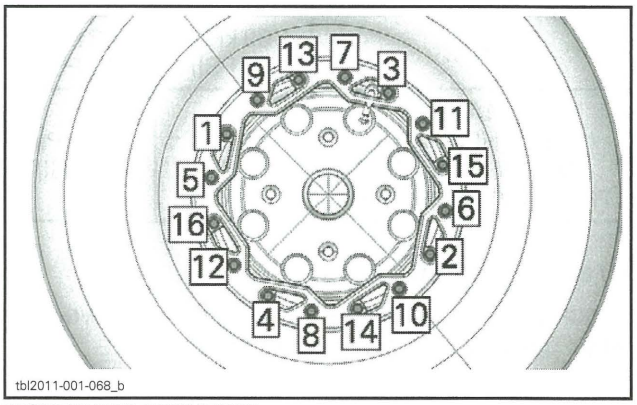

TIGHTENING SEQUENCE

NOTE: The beadlock clamp ring should be in contact with the beadlock inner ring. The beadlock clamp ring can flex slightly to match the tire bead. IT IS NORMAL.

8. Verify the gap between tire and beadlock clamp ring, it should be practically equal all around the ring.

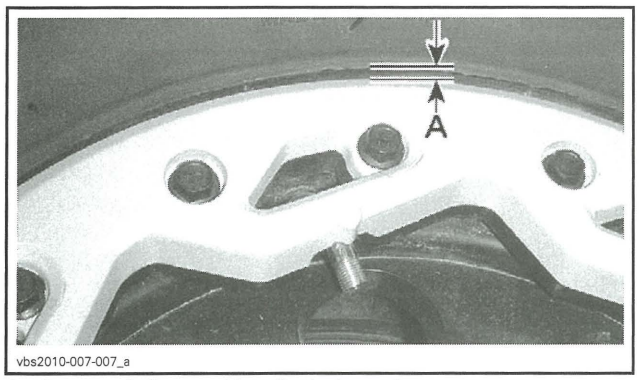

A. Gap equal all around beadlock clamp ring

If the gap is not acceptable:
- Loosen all screws.
- Check tire position on wheel and reposition it if necessary.
- Restart the tightening sequence as detailed.

9. Torque beadlock screws a **final** time as per following specification and sequence.

TIGHTENING TORQUE	
Beadlock screws (FINAL TORQUE)	8 N•m ± 1 N•m (71 lbf•**in** ± 9 lbf•**in**)

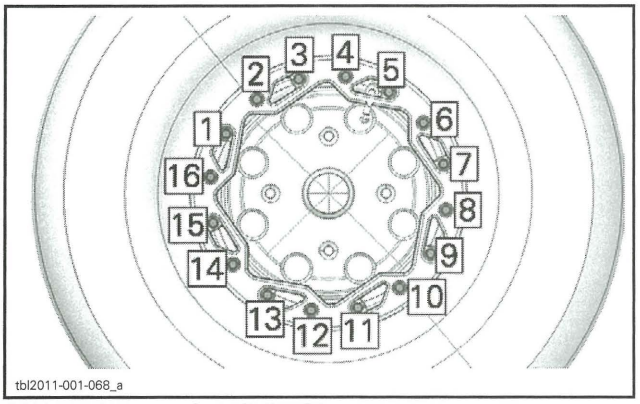

FINAL TIGHTENING SEQUENCE

10. Inflate tire to seat the inner bead on wheel. Always use safe practices, such as a tire safety cage.

⚠ WARNING

Never exceed tire recommended maximum pressure for seating beads.

WHEELS

Wheel Removal

Loosen nuts just enough to be able to unscrew them once the vehicle will be off the ground.

Lift and support the vehicle. Refer to *INTRODUCTION* subsection.

Remove nuts, then remove wheel.

Wheel Inspection

Inspect wheel for wear or damage especially at the mounting holes.

Wheel Installation

At installation, it is recommended to apply anti-seize lubricant on threads.

Check if tires are unidirectional.

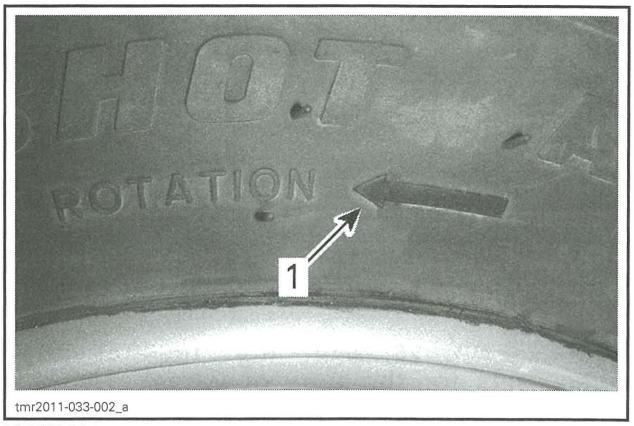

TYPICAL
1. Direction of rotation

Install in the right direction of rotation.

Install lug nuts with the taper towards the wheel.

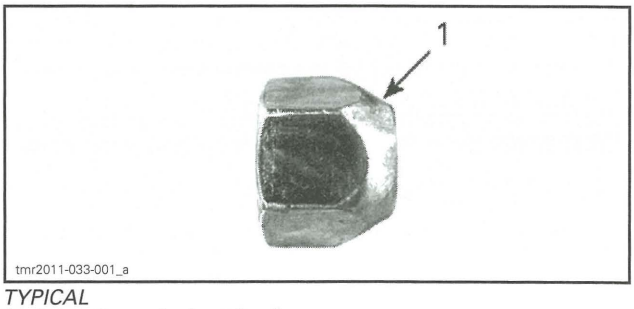

TYPICAL
1. Taper (towards the wheel)

Tighten wheel lug nuts to the specified torque using the illustrated sequence.

WHEEL LUG NUTS	
TORQUE	100 N•m ± 10 N•m (74 lbf•ft ± 7 lbf•ft)

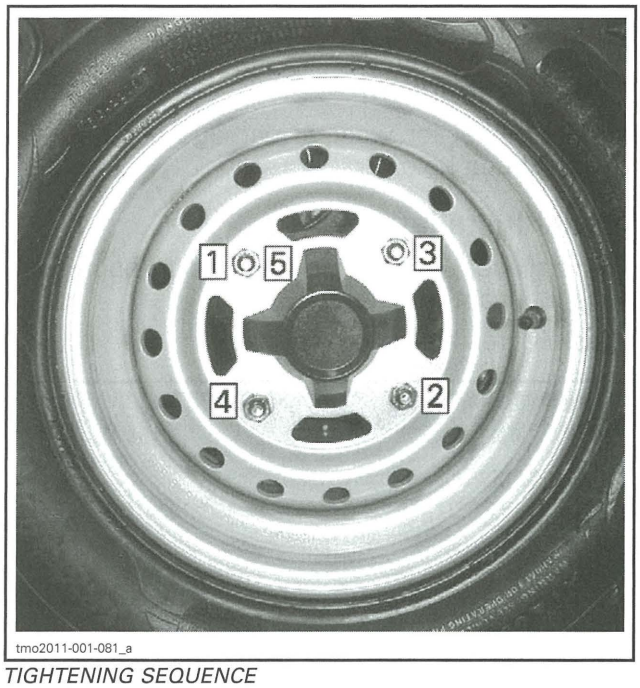

TIGHTENING SEQUENCE

NOTICE Always use the recommended wheel nuts for the type of wheel. Using a different nut could cause damages to the rim or studs.

STEERING SYSTEM

SERVICE TOOLS

Description	Part Number	Page
STEERING ALIGNMENT TOOL	529 036 059	352

SERVICE PRODUCTS

Description	Part Number	Page
XPS SYNTHETIC GREASE	293 550 010	355

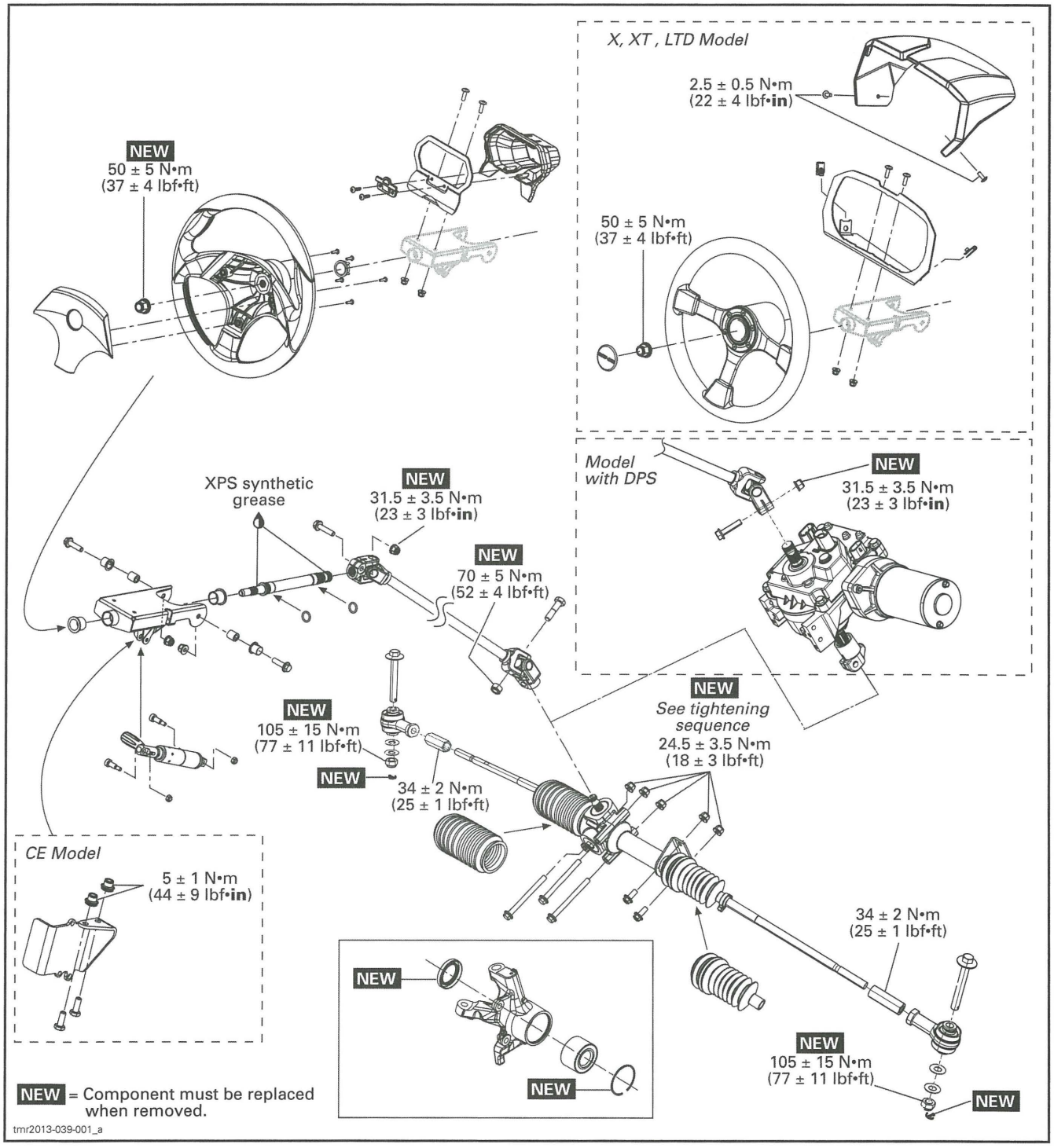
X, XT , LTD Model
2.5 ± 0.5 N•m
(22 ± 4 lbf•in)
NEW
50 ± 5 N•m
(37 ± 4 lbf•ft)
50 ± 5 N•m
(37 ± 4 lbf•ft)
Model
with DPS
NEW
31.5 ± 3.5 N•m
(23 ± 3 lbf•in)
XPS synthetic
grease
NEW
31.5 ± 3.5 N•m
(23 ± 3 lbf•in)
NEW
70 ± 5 N•m
(52 ± 4 lbf•ft)
NEW
105 ± 15 N•m
(77 ± 11 lbf•ft)
NEW
34 ± 2 N•m
(25 ± 1 lbf•ft)
NEW
See tightening
sequence
24.5 ± 3.5 N•m
(18 ± 3 lbf•ft)
CE Model
5 ± 1 N•m
(44 ± 9 lbf•in)
34 ± 2 N•m
(25 ± 1 lbf•ft)
NEW
NEW
NEW
105 ± 15 N•m
(77 ± 11 lbf•ft)
NEW
NEW = Component must be replaced
when removed.
tmr2013-039-001_a

GENERAL

The procedures described below are the same for the RH and LH sides, unless otherwise instructed.

NOTICE

The DPS torque sensor is extremely sensitive to magnetism and static electricity discharge.

During all the following procedures, any magnetic source (metallic or magnetic tool, magnetic lamp base, magnetized screwdriver etc) have to be kept away from the DPS unit.

Never perform arc welding in the DPS area.

Otherwise, poor DPS operation might occur.

ADJUSTMENT

DPS TORQUE OFFSET RESET

Models with DPS

When replacing the following parts or adjusting steering alignment, the DPS torque sensor offset must be reset (to zero) for proper system operation. Refer to *DYNAMIC POWER STEERING (DPS)* subsection.

PART ADJUSTED OR REPLACED
– DPS unit
– Steering shaft bushing
– Rack and pinion
– Tie rod
– Tie rod end
– Knuckle
– Wheel bearing
– Ball joint
– Front suspension arm (lower/upper)
– Steering alignment

STEERING ALIGNMENT

1. Place vehicle on a level surface.
2. Inflate tires to recommended pressure.
3. Find rack and pinion center to center as follows:
   - 3.1 Calculate the total steering wheel rotations from side to side.
   - 3.2 Position the steering wheel at **half** the total rotations.
4. Check steering wheel position:
   - 4.1 If steering angle is within ± 3°, go to **step 6**.
   - 4.2 If steering angle is outside of ± 3°, go to **step 5**.

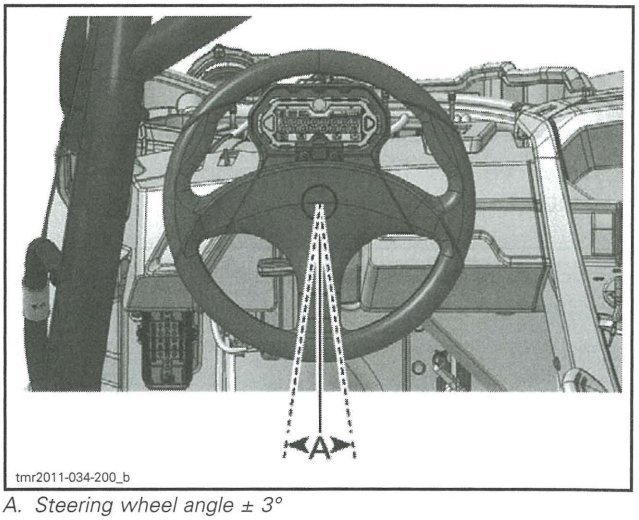

A. Steering wheel angle ± 3°

5. Reposition steering wheel onto steering shaft as follows:

   NOTICE **Make sure rack and pinion does not move during steering wheel repositioning.**

   - 5.1 Remove steering wheel, refer to *STEERING WHEEL REMOVAL*.
   - 5.2 Reinstall steering wheel to the closest centered position (nearest spline).
6. Center steering wheel.

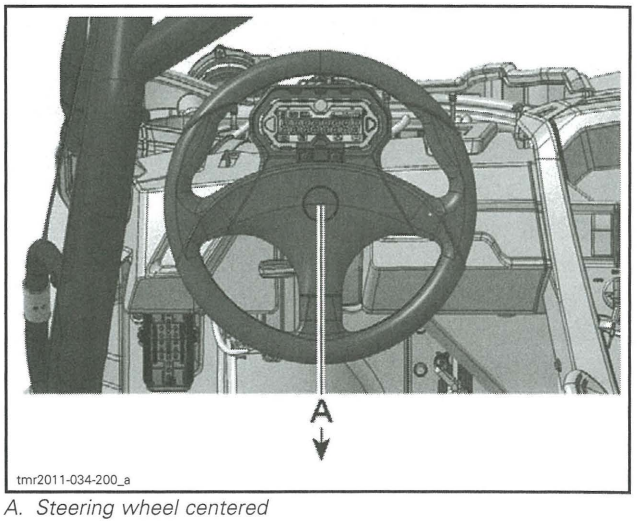

A. Steering wheel centered

7. Remove two wheel lug nuts from a rear wheel.

8. Install STEERING ALIGNMENT TOOL (P/N 529 036 059) using proper spacers.

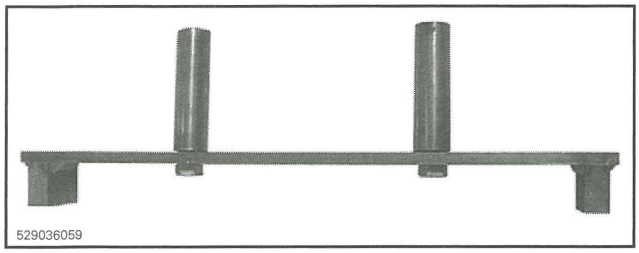

9. Move vehicle to place the tool level with the ground.

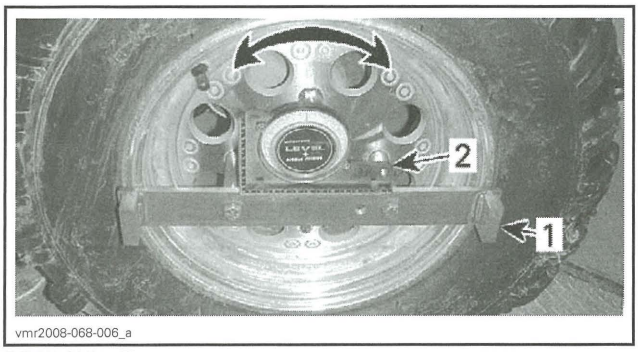

REAR WHEEL
1. Steering adjustment tool
2. Angle gauge or level

10. Place a rope around vehicle tires.
11. Using an elastic, link both ends together.
12. Adjust rope at the center of the wheels.
13. From the front of vehicle, near the front of rim, move rope so that it does not touch the first spacer of tool.

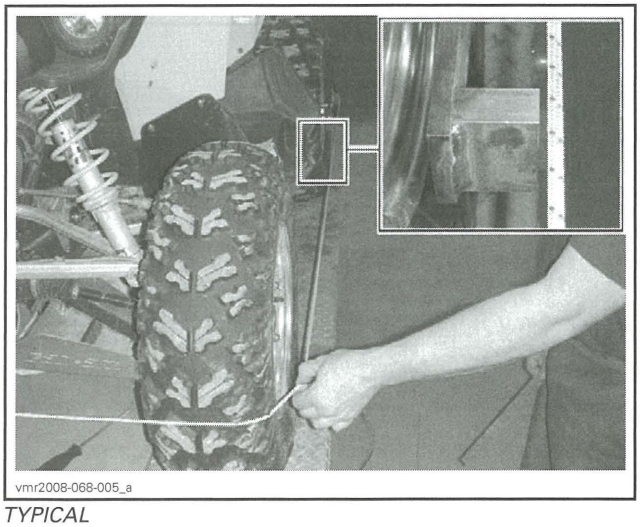

TYPICAL

14. Slowly move rope back until it makes contact with spacer.

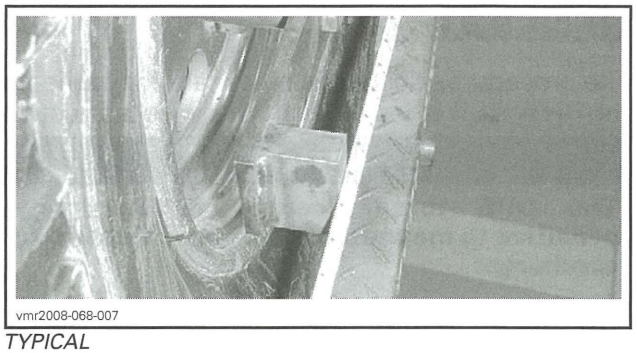

TYPICAL

15. Keep rope in this position.
16. Measure distance of the front wheel between rope and rim as follows:
    - At the front of rim
    - At the rear of rim.

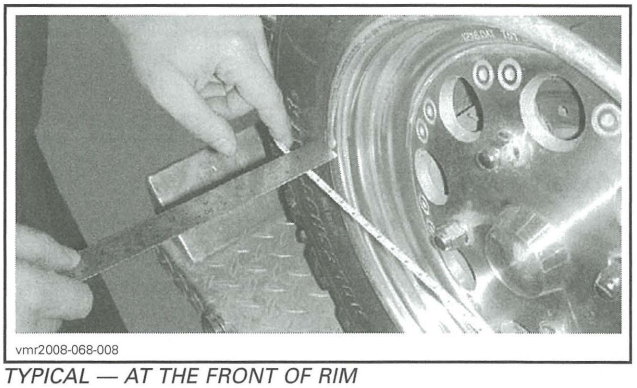

TYPICAL — AT THE FRONT OF RIM

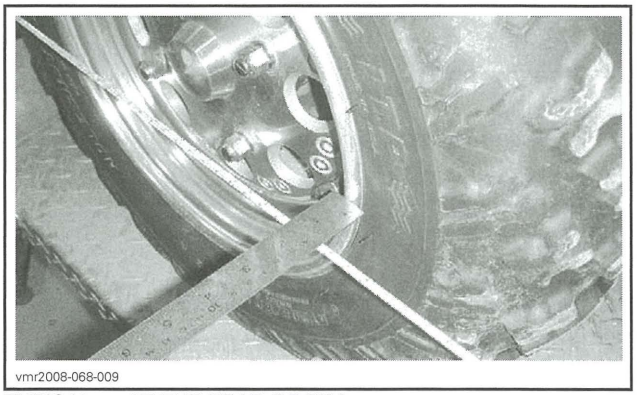

TYPICAL — AT THE REAR OF RIM

17. Calculate the difference between the rear and the front measurement.
18. The difference must be as per the following specification:

WHEEL TOE
0 mm ± 4 mm (0 in ± .157 in)

19. If the wheel toe measurement is out of specification:

    19.1 Adjust tie-rod end.

⚠ WARNING

The minimum tie-rod end length engagement in the tie rod must be 25 mm (1 in).

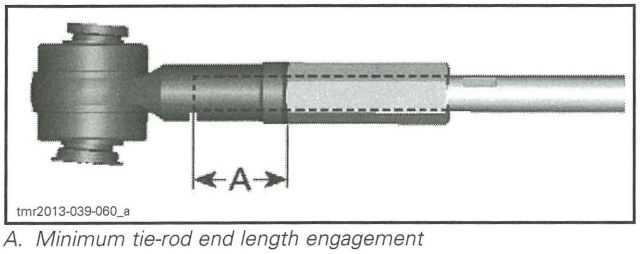

A. Minimum tie-rod end length engagement

19.2 Tighten tie-rod end locking nut to specification.

TIE-ROD END LOCKING NUT TORQUE
34 N•m ± 2 N•m (25 lbf•ft ± 1 lbf•ft)

20. Repeat procedure for the other wheel.

TROUBLESHOOTING

DIAGNOSTIC TIPS

Turning Radius Unequal

If vehicle turns more on one side than the other, check rack and pinion center to center. Refer to *STEERING ALIGNMENT* in this subsection.

PROCEDURES

STEERING WHEEL

Steering Wheel Removal

All Models Except X, XT and LTD

1. From underneath steering wheel, unscrew cap retaining screws.
2. Remove steering wheel cap.
3. Remove nut securing steering wheel to shaft. Discard the nut.
4. Remove steering wheel by pulling it upwards.

X, XT and LTD Models

1. Remove steering wheel cap using a small screwdriver.
2. Remove nut securing steering wheel to shaft. Discard the nut.
3. Remove steering wheel by pulling it upwards.

Steering Wheel Installation

The installation is the reverse of the removal procedure. However, pay attention to the following.

Prior to installing the steering wheel, place front wheels parallel with longitudinal plane of vehicle.

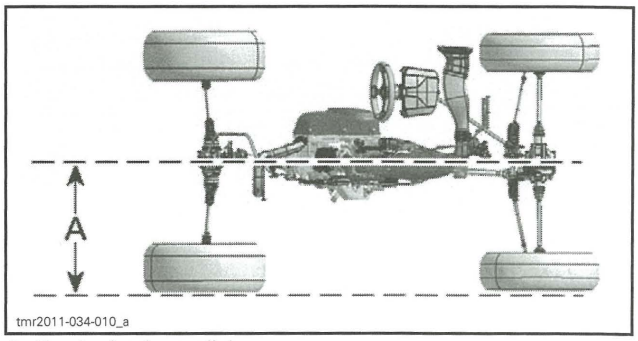

A. Front wheels parallel

Tighten steering wheel retaining nut to specification.

STEERING WHEEL RETAINING NUT TORQUE
50 N•m ± 5 N•m (37 lbf•ft ± 4 lbf•ft)

Check front wheel alignment. Refer to *STEERING ALIGNMENT* in this subsection.

STEERING COLUMN

Steering Column Removal

1. Center steering wheel.
2. Remove bolt and nut securing upper universal joint to steering shaft. Discard the nut.

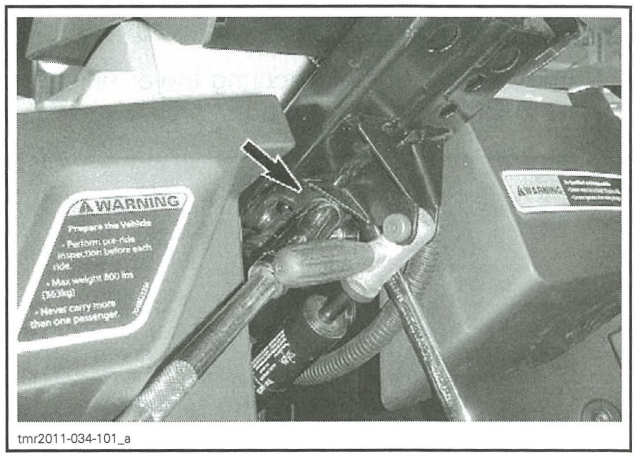

3. Remove steering wheel and steering shaft as an assembly.

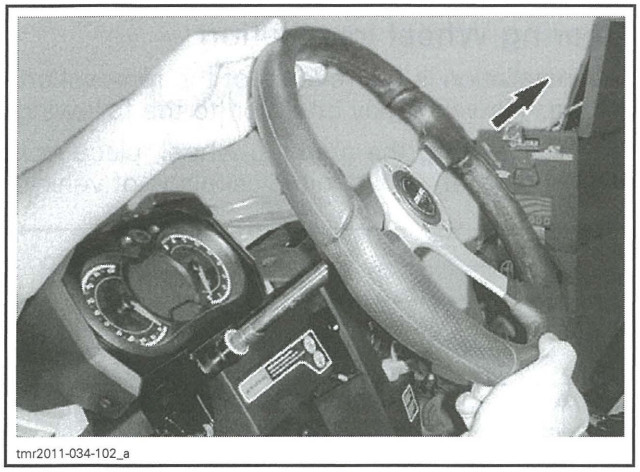
tmr2011-034-102_a

Models Without DPS

4. Remove bolt and nut securing lower universal joint to rack and pinion. Discard the nut.

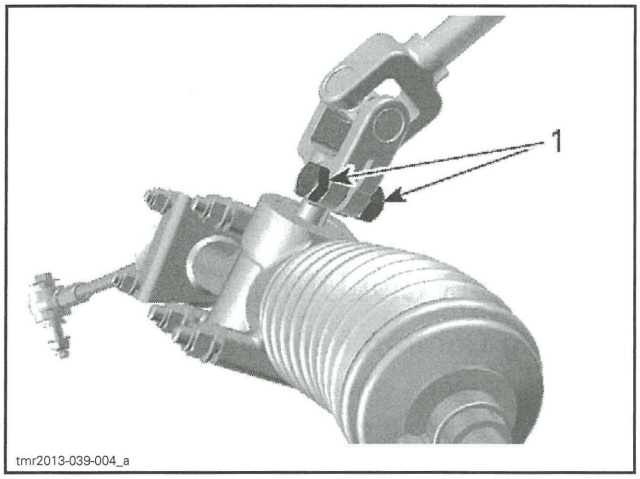

tmr2013-039-004_a

1. Bolt and nut

Models with DPS

5. Remove bolt and nut securing lower universal joint to DPS. Discard the nut.

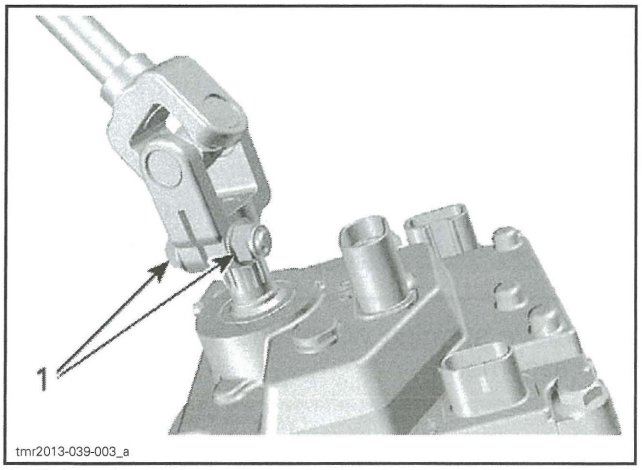

tmr2013-039-003_a

1. Bolt and nut

All Models

6. Pull steering column upwards to detach it from rack and pinion or DPS.

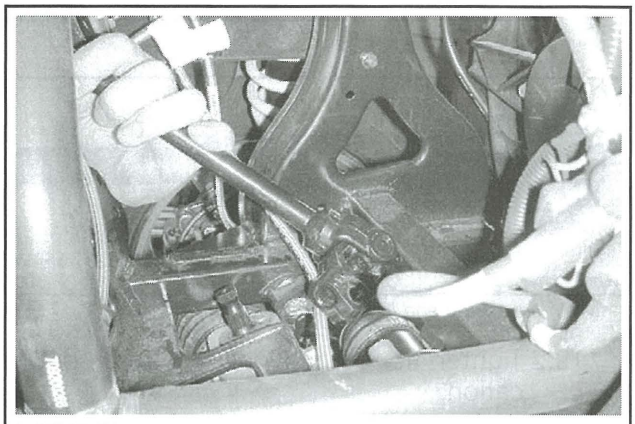
tmr2011-034-104

TYPICAL — MODELS WITHOUT DPS SHOWN

7. Carefully push steering column downwards to release it from steering support.

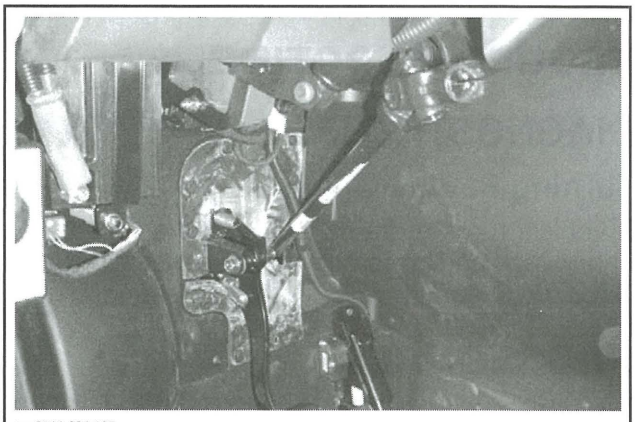
tmr2011-034-105

8. Remove steering column from vehicle.

Steering Column Inspection

NOTICE **Make sure to place the removed steering column in a non-magnetic area and avoid touching it with magnetized objects.**

Check steering column for wear, cracks or bending.

Check steering shaft for wear, cracks or bending.

Check if universal joints move freely.

Check if steering shaft O-rings are brittle, hard or otherwise damaged.

Replace if necessary.

Steering Column Installation

The installation is the reverse of the removal procedure. However, pay attention to the following.

Prior to installing the steering column, place front wheels parallel with longitudinal plane of vehicle.

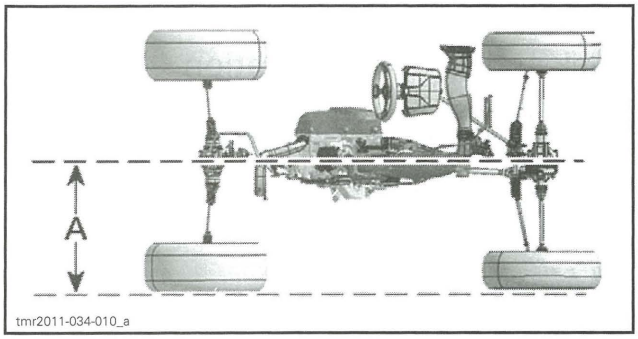

A. Front wheels parallel

Lubricate steering shaft.

STEERING SHAFT LUBRICATION
XPS SYNTHETIC GREASE (P/N 293 550 010)

Install steering wheel and steering shaft. Make sure steering wheel is properly centered.

Models Without DPS

When installing steering column to pinion shaft, align yoke opening opposite to blind teeth of pinion shaft.

⚠ CAUTION Indexing of yoke is required for proper locking on shaft.

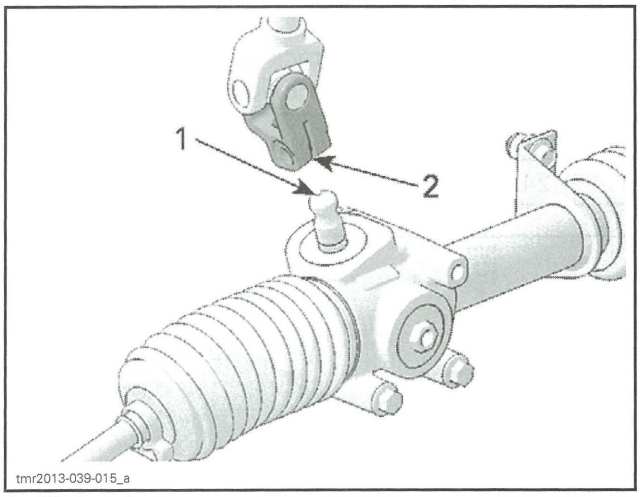

1. Blind teeth
2. Yoke opening

All Models

Fully engage the yoke onto pinion shaft or DPS.

NOTE: Indexing of shaft and yoke is required (blind teeth) on DPS models.

Tighten steering column U-joints to specification. Use NEW nuts.

UPPER U-JOINT NUT TORQUE
31 N•m ± 3 N•m (23 lbf•ft ± 2 lbf•ft)

LOWER U-JOINT NUT TORQUE	
Models without DPS	70 N•m ± 5 N•m (52 lbf•ft ± 4 lbf•ft)
Models with DPS	31.5 N•m ± 3.5 N•m (23 lbf•ft ± 3 lbf•ft)

Check front wheels alignment. Refer to *STEERING ALIGNMENT* in this subsection.

RACK AND PINION

Rack and Pinion Servicing

Rack and pinion is not serviceable except for boots and tie rod ends replacement.

Rack and Pinion Removal

1. Safely lift and support the front of vehicle. Refer to *INTRODUCTION* subsection.
2. Remove both front wheels.

Models Without DPS

3. Remove steering column. Refer to *STEERING COLUMN REMOVAL* in this subsection.
4. Detach tie-rod ends from knuckles. Refer to *TIE ROD END REPLACEMENT* in this subsection.

Models with DPS

5. Detach tie-rod ends from knuckles. Refer to *TIE ROD END REPLACEMENT* in this subsection.
6. Remove the DPS coupler pinch bolt and nut. Discard the nut.

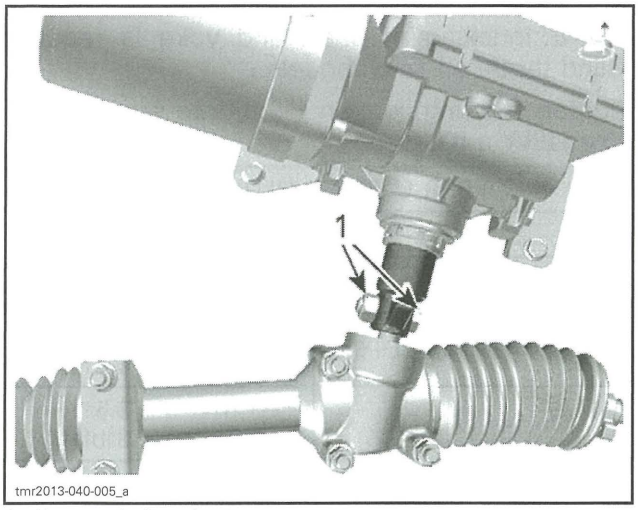

1. Remove bolt and nut

7. Loosen all DPS unit retaining bolts.

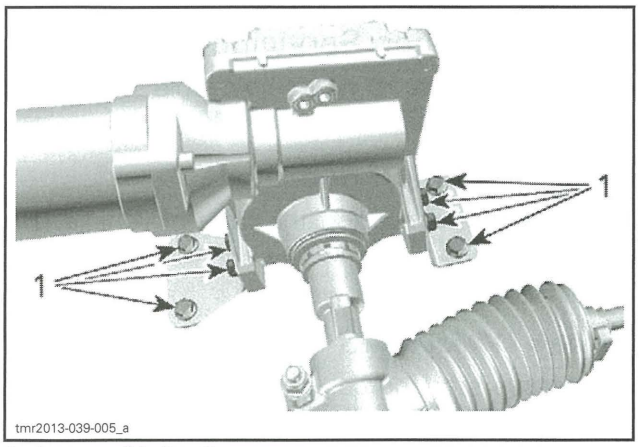

1. Loosen all bolts x8

8. Loosen steering column pinch bolts.

All Models

9. Remove bolts and nuts securing rack and pinion to frame.

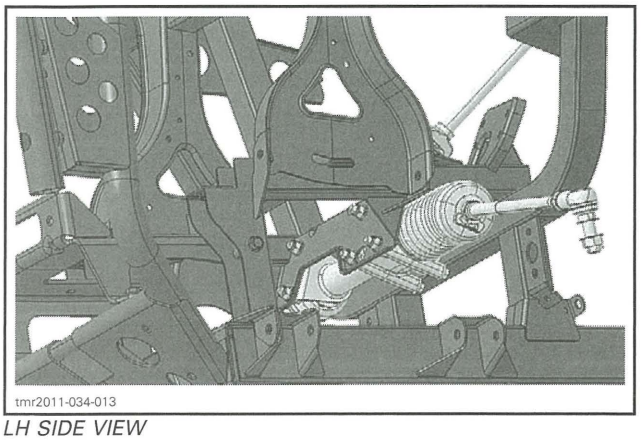

LH SIDE VIEW

Models with DPS

10. Pull down rack and pinion to detach from DPS unit.

All Models

11. From the LH side, remove rack and pinion from vehicle.

Rack and Pinion Installation

The installation is the reverse of the removal procedure. However, pay attention to the following.

Models with DPS

Ensure all DPS unit retaining bolts are loose.

All Models

Find rack and pinion center as follows:

- Calculate the total pinion shaft rotations from side to side.
- Position the pinion shaft at **half** the total rotations. Use the shaft blind teeth as reference.

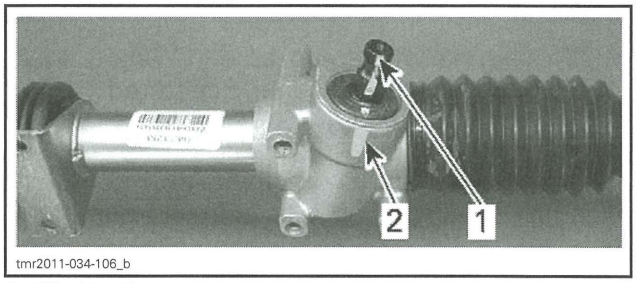

1. Blind teeth
2. Buffer mark

Loosely install retaining bolts and nuts of rack and pinion.

Torque retaining nuts of rack and pinion according to specification using the following sequence.

RACK AND PINION RETAINING NUTS TORQUE
24.5 N•m ± 3.5 N•m (18 lbf•ft ± 3 lbf•ft)

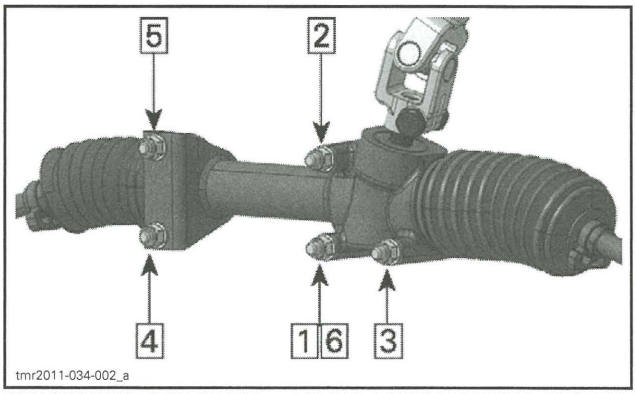

TIGHTENING SEQUENCE — MODELS WITHOUT DPS SHOWN

Models with DPS

Secure the DPS unit. Refer to *DYNAMIC POWER STEERING (DPS)*.

NOTICE The DPS installation procedure **MUST be strictly followed.** Failure to do so may result in DPS misalignment, poor DPS operation due to an induced erroneous torque on DPS shaft or the impossibility to perform a torque sensor reset.

Models Without DPS

Install steering column.

All Models

Check the steering alignment. Refer to *STEERING ALIGNMENT* in this subsection.

TIE-ROD ENDS

Tie-Rod End Replacement

1. Safely lift and support the front of vehicle. Refer to *INTRODUCTION* subsection.
2. Remove front wheel.
3. Detach tie-rod end by removing:
   - Cotter pin
   - Tie-rod end retaining nut
   - Hardened washers
   - Tie-rod end bolt

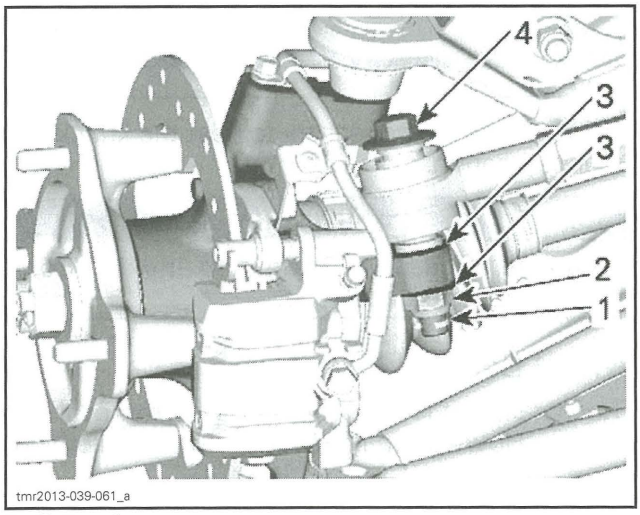

1. *Cotter pin*
2. *Tie-rod end retaining nut*
3. *Hardened washers*
4. *Tie-rod end bolt*

4. Discard cotter pin and nut.
5. Replace tie-rod end.
6. Adjust tie-rod end to the nominal engagement length.

TIE-ROD END NOMINAL ENGAGEMENT LENGTH
31 mm (1.22 in)

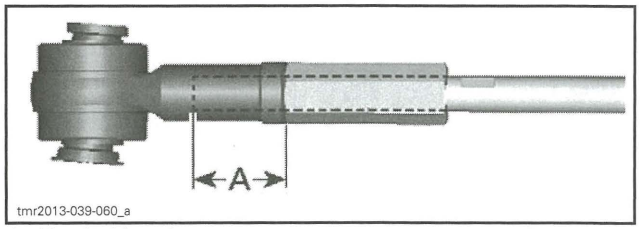

A. Nominal length

⚠ WARNING

The minimum tie-rod end length engagement in the tie rod must be 25 mm (1 in).

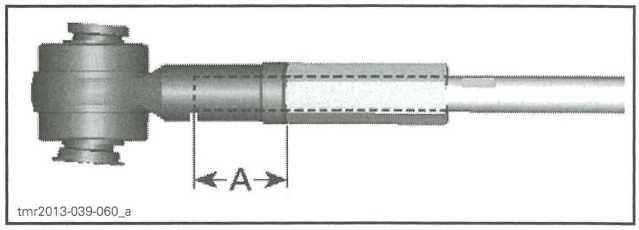

A. Minimum tie-rod end length engagement

7. Torque tie-rod end **locking** nut to specification.

TIE-ROD END **LOCKING** NUT TORQUE
34 N•m ± 2 N•m (25 lbf•ft ± 1 lbf•ft)

8. Attach tie-rod end on knuckle as the reverse of removal.
9. Install a **NEW** tie-rod end **retaining** nut and torque to specification.

TIE-ROD END **RETAINING** NUT TORQUE
105 N•m ± 15 N•m (77 lbf•ft ± 11 lbf•ft)

10. Install a **NEW** cotter pin. Both ends of cotter pins must be folded.
11. Install front wheel.
12. Check the steering alignment, refer to *STEERING ALIGNMENT* in this subsection.

KNUCKLES

Knuckle Removal

1. Safely lift and support the front of vehicle. Refer to *INTRODUCTION* subsection.
2. Remove front wheel.
3. Detach tie-rod end from knuckle, refer to *TIE-ROD END* in this subsection.
4. Remove caliper, refer to *BRAKES* subsection.

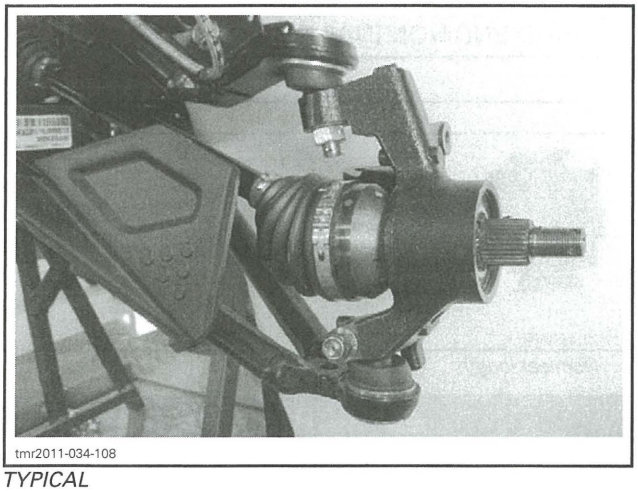
tmr2011-034-108

TYPICAL

5. Remove wheel hub, refer to *FRONT DRIVE* subsection.
6. Detach upper suspension arm from knuckle, refer to *FRONT SUSPENSION*.
7. Detach lower suspension arm from knuckle, refer to *FRONT SUSPENSION*.
8. Remove knuckle from vehicle.

Knuckle Inspection

Check knuckle for cracks or other damages.

Replace if necessary.

Knuckle Installation

The installation is the reverse of the removal procedure.

WHEEL BEARINGS

Wheel Bearing Inspection (Maintenance)

Refer to *PERIODIC MAINTENANCE PROCEDURES* subsection.

Wheel Bearing Inspection (During Component Removal)

Whenever the drive axle or knuckle is removed, check wheel bearing as follows:

- Check if wheel bearing turns freely and smoothly.
- Check seal condition.

Replace if necessary.

Wheel Bearing Removal

1. Remove knuckle from vehicle, refer to *KNUCKLE REMOVAL* in this subsection.
2. Remove and discard knuckle seal.
3. Remove circlip.

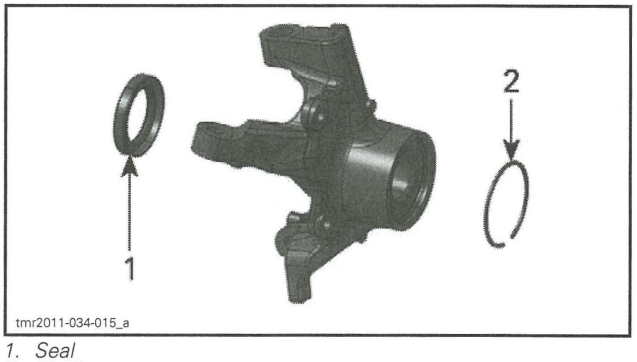

tmr2011-034-015_a

1. *Seal*
2. *Circlip*

4. Install knuckle on a press.
5. Use an appropriate bearing remover.
6. Remove bearing from knuckle.

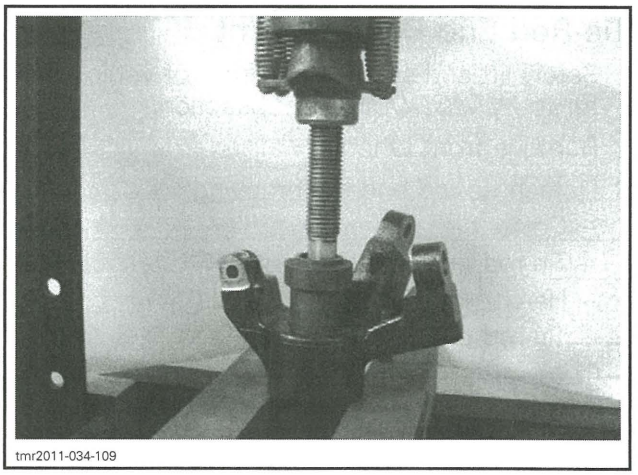
tmr2011-034-109

NOTE: It may be necessary to heat the knuckle to remove bearing.

⚠ WARNING

Clean all grease, outside and inside, from knuckle before heating it.

Wheel Bearing Installation

The installation is the reverse of the removal procedure. However, pay attention to the following.

To ease wheel bearing installation:

- Place bearing in a freezer for 10 minutes.
- Place knuckle in oven to 100°C (212°F) for 30 minutes maximum.

When knuckle is cooled down, install **NEW** circlip and **NEW** seal.

DYNAMIC POWER STEERING (DPS)

SERVICE TOOLS

Description	Part Number	Page
DPS COUPLER PULLER	529 036 247	373
DPS POSITIONING ADAPTOR	529 036 248	372
FLUKE 115 MULTIMETER	529 035 868	364, 366
PITMAN ARM JIG	529 036 225	372–373

SERVICE PRODUCTS

Description	Part Number	Page
DIELECTRIC GREASE	293 550 004	371

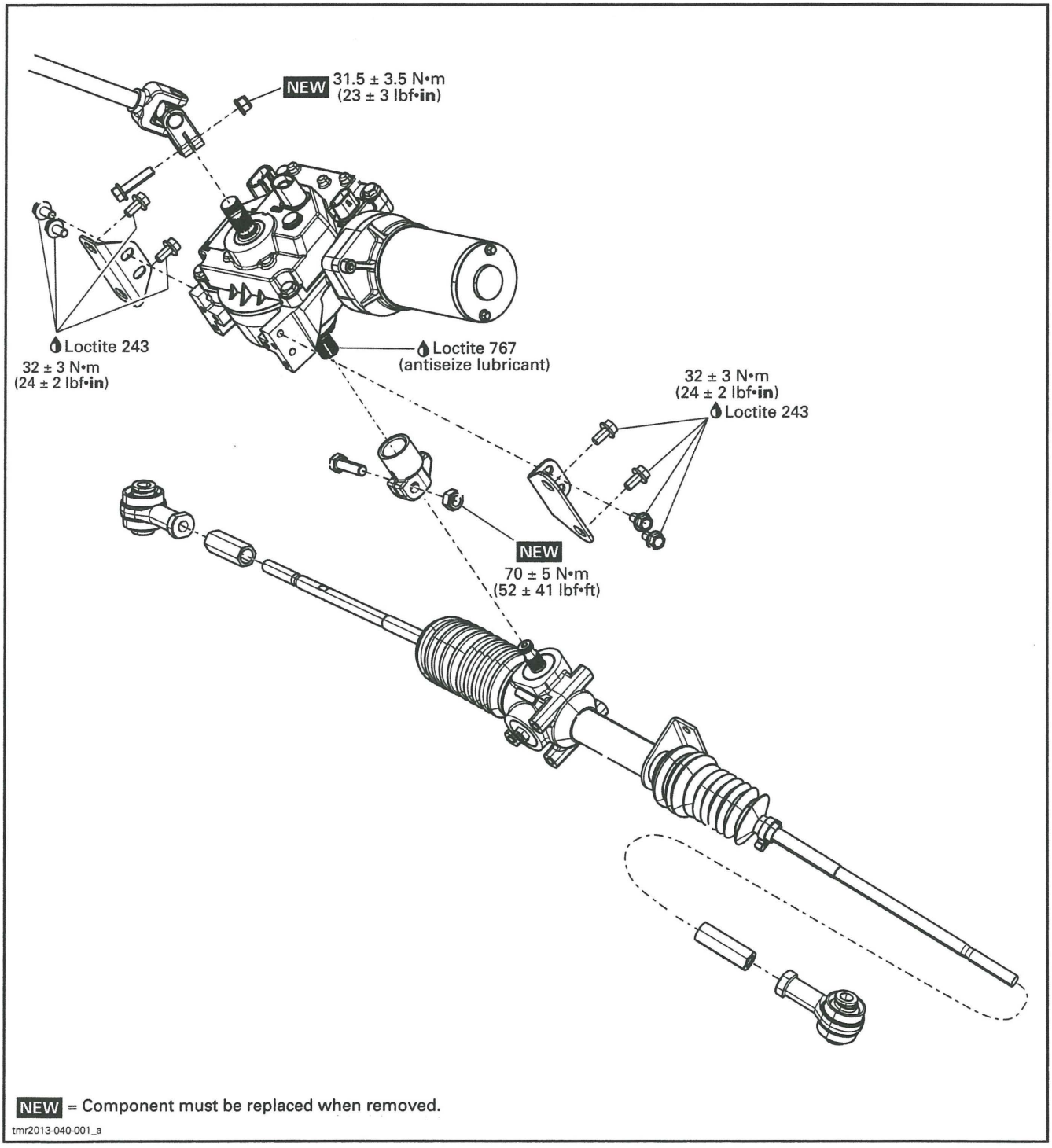

NEW = Component must be replaced when removed.

tmr2013-040-001_a

GENERAL

NOTICE

The DPS torque sensor is extremely sensitive to magnetism and static electricity discharge.

During all the following procedures, any magnetic source (metallic or magnetic tool, magnetic lamp base, screwdriver etc) have to be kept away from the DPS unit.

Never perform arc welding in the DPS area.

Otherwise, poor DPS operation might occur.

SYSTEM DESCRIPTION (FEATURES)

The Dynamic Power Steering (DPS) provides a computer controlled, variable power assist, achieved by an electric motor to optimize the amount of steering input required by the rider.

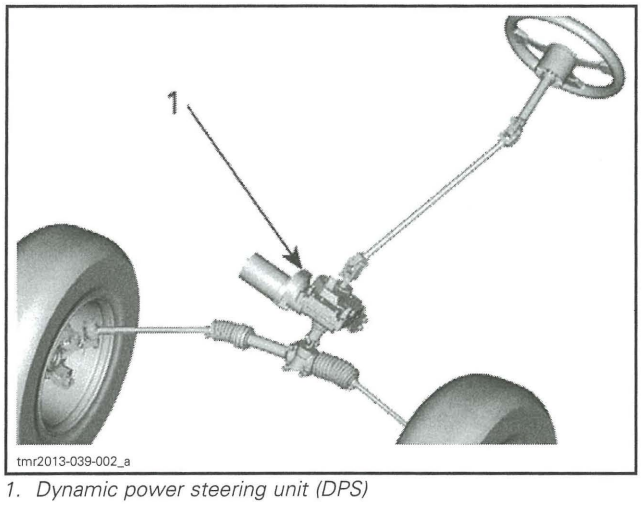

1. Dynamic power steering unit (DPS)

The DPS system uses the following parameters to determine how much steering assist it provides:

- Engine RPM
- Battery/electrical system voltage
- Vehicle speed
- DPS shaft torque sensor input.

The amount of steering assist provided is dependent on the steering wheel effort (steering torque), electrical power available, and vehicle speed.

The greater the steering wheel effort (torque), the greater the assist will be.

The slower the vehicle speed, the greater the assist will be.

If the electrical system is activated but the engine is **not** running, there is **no** power assist provided.

Steering torque may also come from the wheels due to rough terrain. Steering kickback is reduced while providing feedback to the driver.

The greater the power steering assist, the greater the load on the electrical system.

When the electrical system is under high load (battery not at full charge, operating the vehicle for prolonged periods of time at slow speed and low RPM which, requires higher power steering assist), the battery power reserve will gradually decrease. This further increases the load on the charging system and the electrical system voltage will drop. As system voltage drops, so does power steering assist.

NOTE: It is important to maintain the battery at a full state of charge to ensure proper DPS operation.

SYSTEM DESCRIPTION (COMPONENTS)

DPS Unit

The DPS unit is a self contained unit that includes the steering gear, the DPS module, the DPS motor, and the torque sensor.

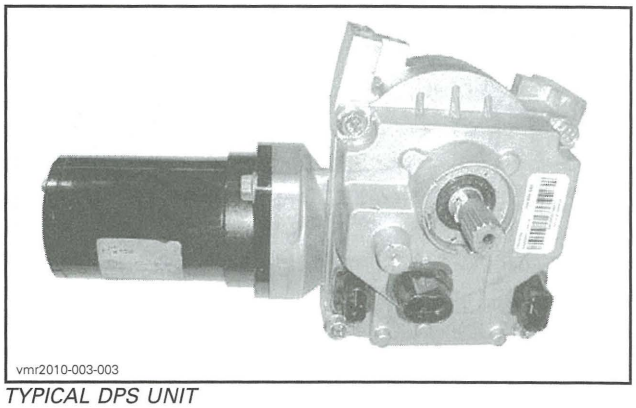

TYPICAL DPS UNIT

The DPS module provides DC power to the motor. The amount and duration of that DC power is determined by the inputs to the DPS module. The direction in which the motor turns is changed by reversing the polarity of the circuit current.

The DPS motor does not "spin", but rather turns in very small increments based on the amount, duration, and direction of DC power delivered by the DPS module.

DPS Unit Protection

To protect the DPS electronic components, the steering assist behavior will change as follows.

CONDITION	DPS BEHAVIOR
When motor internal temperature reaches 130°C (266°F) (DPS continuously estimates it)	Steering assist will gradually decrease.
DPS internal board temperature is above 85°C (185°F)	
When motor internal temperature reaches 150°C (302°F)	Steering assist is stopped.
DPS internal board temperature is above 100°C (212°F)	

When the DPS unit temperature is back within normal operating range, steering assist should resume to normal operation.

Steering Torque Sensor

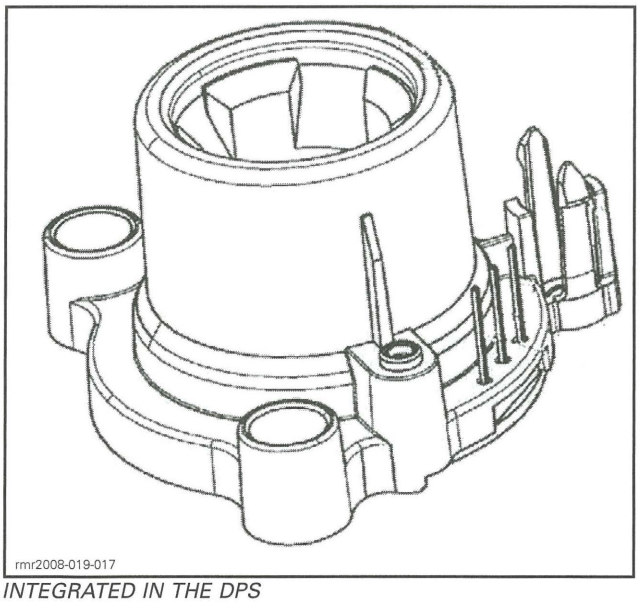

INTEGRATED IN THE DPS

The steering column is connected to the top of of the DPS shaft. A small area of the DPS shaft is magnetized. Inside the DPS unit, a torque sensor surrounds the magnetized area of the DPS shaft.

When the steering wheel is turned, torque is applied to the shaft which tends to twist the shaft slightly, deforming the magnetic field in the shaft. The sensor detects the torque by measuring the deviation of the magnetic field.

The torque sensor is very sensitive and can detect very small changes in the magnetic field. The harder the steering wheel is turned, the greater the magnetic deviation, the greater the power steering assist.

NOTICE **The internal torque sensor is very sensitive to external magnetic source. All components touching the DPS unit must be kept in a non-magnetic area and avoid any contact with components. When DPS shaft (or touching components) is in contact with a part or source, this will affect the torque reading values and inadvertently affect the behavior of the DPS unit.**

ADJUSTMENT

TORQUE OFFSET RESET

When replacing the following parts or adjusting steering alignment, the sensor torque offset must be reset (to zero) for proper system operation.

PART ADJUSTED OR REPLACED	WHAT TO DO
– DPS unit – Steering shaft bushing – Rack and pinion – Tie rod end – Knuckle – Wheel bearing – Ball joint – Front suspension arm (lower/upper) – Steering alignment	Reset Torque Offset in **Setting, DPS**

1. Ensure proper *STEERING ALIGNMENT*, refer to *STEERING SYSTEM* subsection.
2. Connect vehicle to the latest B.U.D.S. software.
3. In B.U.D.S., select **Read Data**.
4. Check if an update is available for the DPS. If so, install it prior to performing the reset.
5. Choose the **Setting** tab.
6. At the bottom LH corner of the **Setting** page, choose the **DPS** tab.

REQUIRED CONDITIONS TO ALLOW THE TORQUE OFFSET RESET
Steering wheel free and centered within ±10°. There MUST NOT be any effort applied to the steering column.
DPS temperature over 0°C (32°F).
Engine not running.

7. Press **Reset Torque Offset** button.

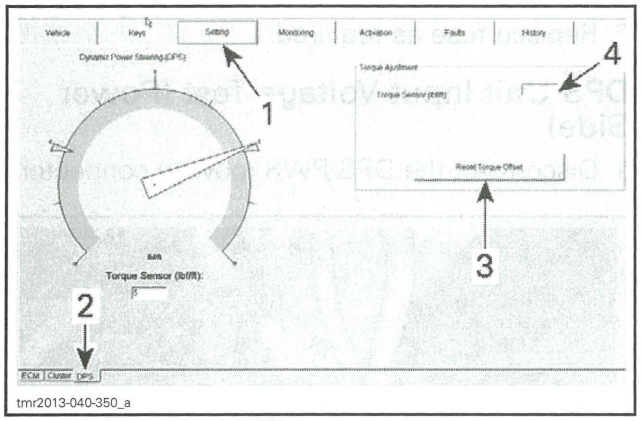

DPS TORQUE OFFSET RESET
1. *Setting tab*
2. *DPS tab*
3. *Reset Torque Offset button*
4. *Torque Sensor value (will reset)*

If the **Torque Sensor** value is not close to 0, carry out the following:
- DPS unit mounting check.
- DPS unit and rack and pinion axis alignment check.
- Magnetized part(s): Replace steering column. If problem persists, replace DPS coupler. If problem persists, replace DPS unit.
- DPS unit replacement.

TROUBLESHOOTING

NO POWER STEERING ASSIST

1. DPS malfunction.
   - *If the CHECK ENGINE light is on and a CHECK DPS message is visible in the gauge, check for fault codes using B.U.D.S. and carry out service action.*
2. No power to DPS unit.
   - *Carry out a DPS UNIT FUSE TEST as detailed in this subsection. Replace as required.*
   - *Carry out a DPS UNIT INPUT VOLTAGE TEST (POWER SIDE) as detailed in this subsection. Repair or replace wiring/connectors as required.*
   - *Carry out a DPS UNIT INPUT VOLTAGE TEST (CONTROL SIDE) as detailed in this subsection. Repair or replace wiring/connectors as required.*
3. No ground to DPS unit.
   - *Carry out a DPS UNIT GROUND CIRCUIT TEST as detailed in this subsection. Repair or replace wiring/connectors as required.*
4. No engine RPM signal from ECM.
   - *If engine RPM can be displayed in the multifunction gauge when the engine is running, carry out a DPS UNIT COMMUNICATION LINK (CAN) CONTINUITY TEST as detailed in this subsection. Repair or replace wiring/connector as required.*
   - *If engine RPM cannot be displayed in the multifunction gauge, use B.U.D.S. to check for applicable fault codes. Carry out service actions.*

LOW POWER STEERING ASSIST

1. Low battery voltage.
   - *Check battery terminals. Clean, repair, replace or tighten as required.*
   - *Test battery. Recharge or replace battery as required.*
   - *Carry out a DPS UNIT INPUT VOLTAGE TEST (POWER SIDE) as detailed in this subsection. Ensure power connector pins (DPS2-A and DPS2-B) are clean, corrosion free, tight, and make good contact. Repair or replace wiring/connectors as required.*
   - *Carry out a DPS UNIT GROUND CIRCUIT TEST as detailed in this subsection. Ensure ground post connections and DPS connector pins are clean, corrosion free, tight, and make good contact. Repair or replace wiring/connectors as required.*
   - *Carry out a DPS SYSTEM LOAD TEST as detailed in this subsection.*
2. Low input voltage to DPS unit.
   - *Carry out a DPS UNIT INPUT VOLTAGE TEST (POWER SIDE) as detailed in this subsection. Ensure power connector pins (DPS2-A and DPS2-B) are clean, corrosion free, tight, and make good contact. Repair or replace wiring/connectors as required.*
3. Faulty DPS ground circuit.
   - *Carry out a DPS UNIT GROUND CIRCUIT TEST. Ensure DPS ground connector pins (DPS3-A and DPS3-B) and frame ground post are clean, corrosion free, tight, and make good contact. Repair or replace wiring/connector as required.*

ASYMMETRICAL POWER STEERING ASSIST (SIDE TO SIDE)

1. Torque sensor not reset to zero.
   - *Ensure steering alignment is within specification and carry out the TORQUE OFFSET RESET procedure detailed in this subsection.*

TORQUE SENSOR CANNOT BE RESET

1. Mechanical problem or DPS parts.
   - *Refer TORQUE OFFSET RESET procedure detailed in this subsection.*

PROCEDURES

DPS UNIT

NOTICE

The DPS torque sensor is extremely sensitive to magnetism and static electricity discharge.

During all the following procedures, any magnetic source (metallic or magnetic tool, magnetic lamp base, magnetized screwdriver etc) have to be kept away from the DPS unit.

Never perform arc welding in the DPS area.

Otherwise, poor DPS operation might occur.

DPS Unit Power Fuse Test

A 50 A DPS fuse located in the fuse box **no. 2** (PF2-F3), provides power for the DPS motor.

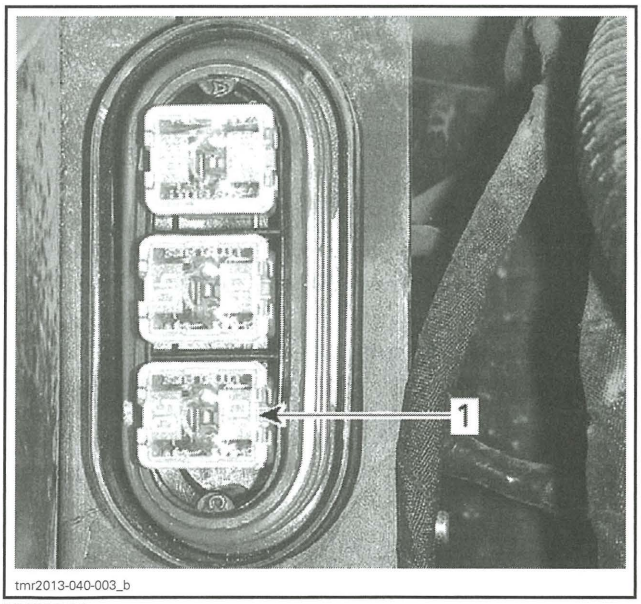

TYPICAL
1. ACS/DPS fuse

1. Using a FLUKE 115 MULTIMETER (P/N 529 035 868) set to Ω selection, remove and test the DPS fuse.

2. Replace fuse as required.

DPS Unit Input Voltage Test (Power Side)

1. Disconnect the DPS PWR (power) connector.

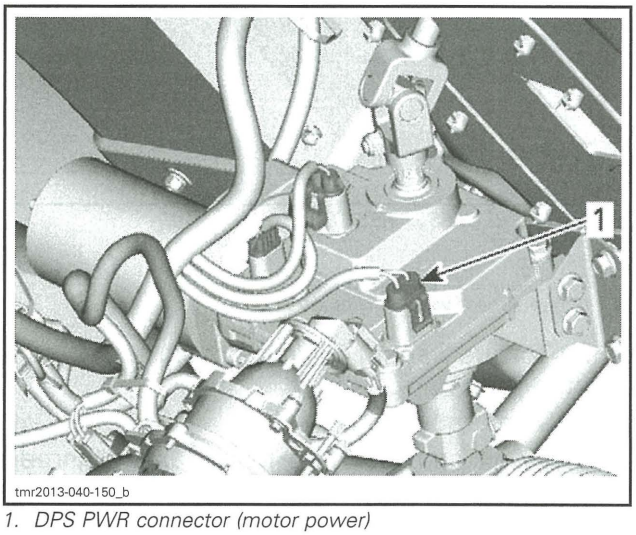

1. DPS PWR connector (motor power)

2. Test for 12 Vdc DPS motor power at DPS2-A and DPS2-B as per following table.

MULTIMETER PROBE POSITIONS		VOLTAGE
DPS power connector pin A	Battery ground	Battery voltage
DPS power connector pin B		
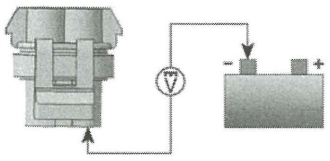 rmr2008-028-091_a		

If NO voltage is measured, test the 50 A DPS fuse in the fuse box **no. 2** (PF2-F3). If good, check wires and connector pins. Replace or repair defective parts and reset fault codes.

If battery voltage is measured, carry out the following *DPS UNIT INPUT VOLTAGE TEST (CONTROL SIDE)*.

NOTE: This test may also be carried out by connecting a 12 Vdc test light between each DPS PWR connector pins (A and B), and the battery (-) negative terminal. The test light must come on bright.

DPS Unit Input Voltage Test (Control Side)

1. Disconnect DPS CTRL (control) connector.

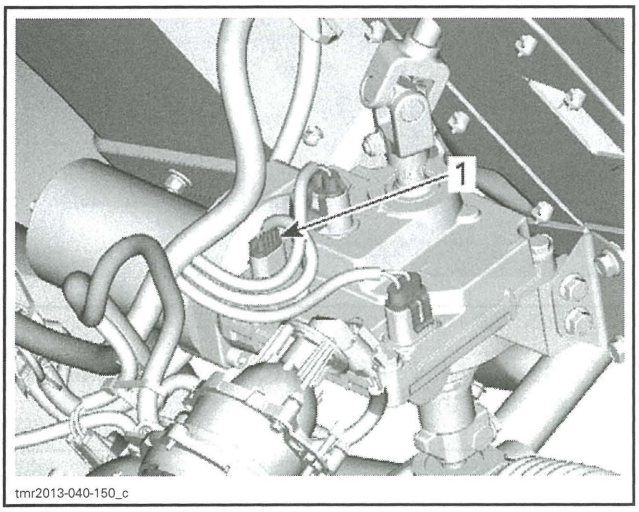

1. Control connector

2. Set the ignition switch to ON.
3. Test for 12 Vdc power to the DPS module at DPS1-A as per following table.

MULTIMETER PROBE POSITIONS	VOLTAGE
DPS control connector (pin A) and battery ground	Battery voltage
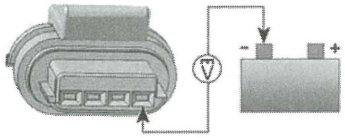 rmr2008-028-093_a	

If NO voltage is measured, check wires and connector pin from DPS unit to the main relay 2 in fuse box **no. 1** (PF1-2B). Replace or repair defective parts and reset fault codes.

If battery voltage is measured, carry out the following *DPS UNIT GROUND CIRCUIT TEST*.

NOTE: This test may also be carried out by connecting a 12 Vdc test light between the DPS control connector (pin A), and the battery (-) negative terminal. The test light must come on bright.

DPS Unit Ground Circuit Test

1. Disconnect the DPS ground connector (GND).

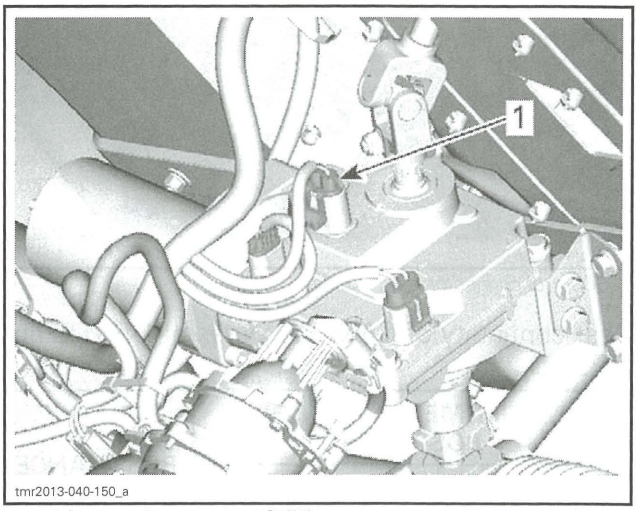

1. DPS ground connector (GND)

2. Test for continuity between DPS3-A and DPS3-B to battery ground.

MULTIMETER PROBE POSITIONS		READING
DPS GND connector pin A	Battery ground	Continuity (close to 0 Ω)
DPS GND connector pin B		

If there is NO continuity or a high resistance is measured, check wires and connector pins from DPS unit to chassis ground post. Replace or repair defective parts and reset fault codes.

If there is good continuity, carry out the following *DPS UNIT COMMUNICATION LINK (CAN) CONTINUITY TEST*.

NOTE: This test may also be carried out by connecting a 12 Vdc test light between each GDN connector pin and the battery (+) positive terminal. The test light must come on bright.

DPS Unit Communication Link (CAN) Continuity Test

NOTE: DPS unit must receive an RPM signal to provide power steering assist.

Disconnect the DPS control connector and the multifunction gauge connector.

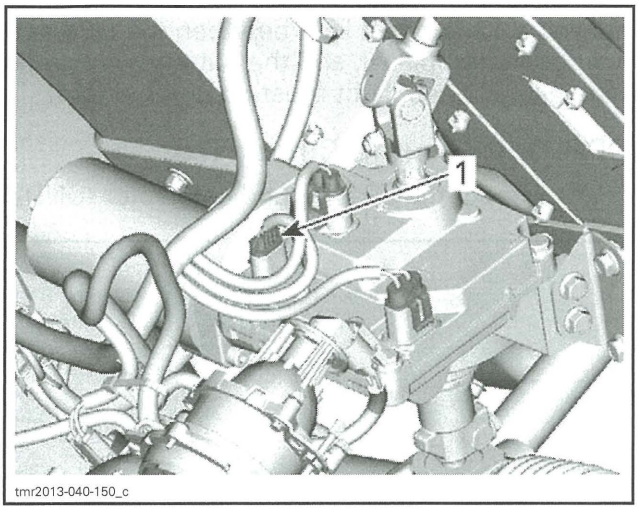

1. Control connector

Test continuity of CAN Bus Wires at DPS1-C and DPS1-D.

MULTIMETER PROBE POSITIONS		RESISTANCE @ 20°C (68°F)
DPS CONTROL CONNECTOR	MULTIFUNCTION GAUGE CONNECTOR	
Pin C	Pin 19	Below 1 Ω
Pin D	Pin 4	

If resistance measured is out of specification, check wires and connector pins. Carry out repairs as required and reset fault codes using B.U.D.S. software.

If resistance measured is good, replace the DPS unit and reset fault codes using B.U.D.S. software.

DPS System Load Test

If the charging system cannot sustain normal voltage when the DPS is operating, DPS ASSIST may be greatly reduced or nonexistent. Carry out the following steps.

1. Use the FLUKE 115 MULTIMETER (P/N 529 035 868) and select Vdc.
2. Connect the RED multimeter lead to the positive battery terminal.
3. Connect the BLACK multimeter lead to the battery ground.
4. Measure the battery voltage.

NOTE: If battery voltage is low, recharge battery.

5. Ensure the vehicle transmission is set to PARK.
6. Start the engine.
7. Note the voltage on the multimeter with the engine running (charging system voltage).
8. Press the **RANGE** button repeatedly to select **Manual Range 6 0**.

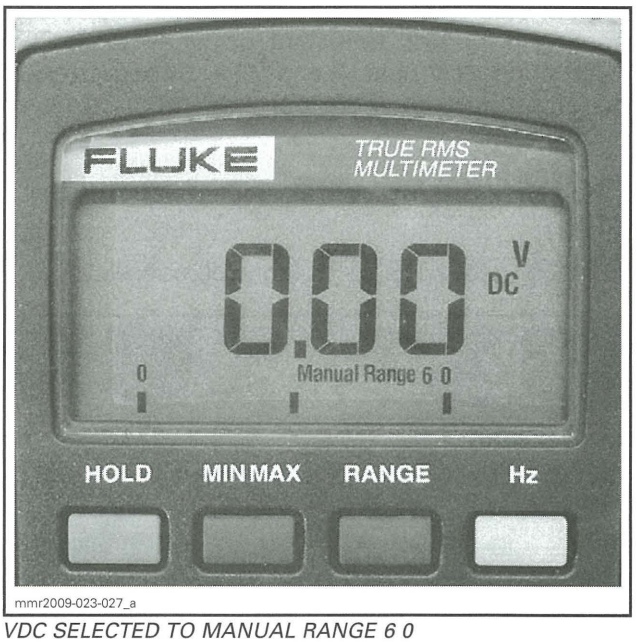

VDC SELECTED TO MANUAL RANGE 6 0

9. Press the **MIN MAX** button on the multimeter to engage the MIN function.

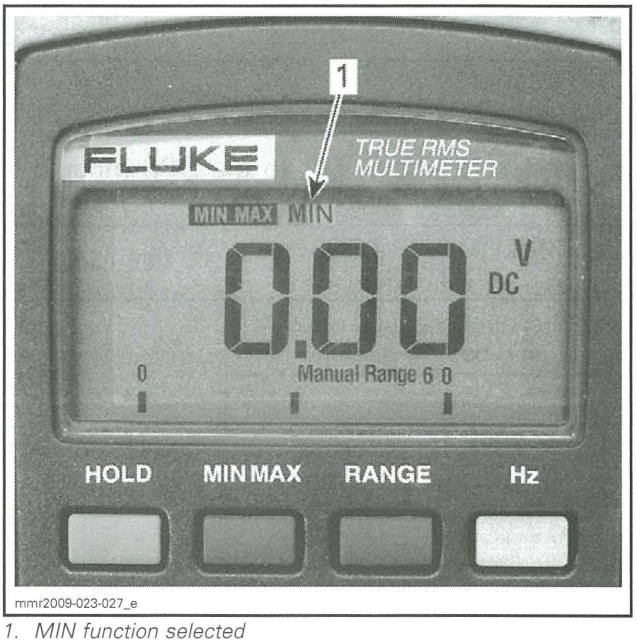

1. MIN function selected

10. Turn the steering wheel **momentarily** against the steering hard stops to each side.

NOTE: Do not hold steering against steering hard stops for and extended period of time.

11. Read the MIN charging system voltage recorded while the steering wheel was turned against each stop.

DPS SYSTEM LOAD TEST			
PROBE POSITIONS		STEERING POSITION	VOLTAGE READING
Battery (-) terminal	Battery (+) terminal	LH stop	At least 12 Vdc
		RH stop	

NOTE: Turning the steering wheel momentarily against the steering hard stops generates maximum DPS load (maximum current draw on electrical system). Electrical system must sustain at least 12 Vdc for proper DPS operation.

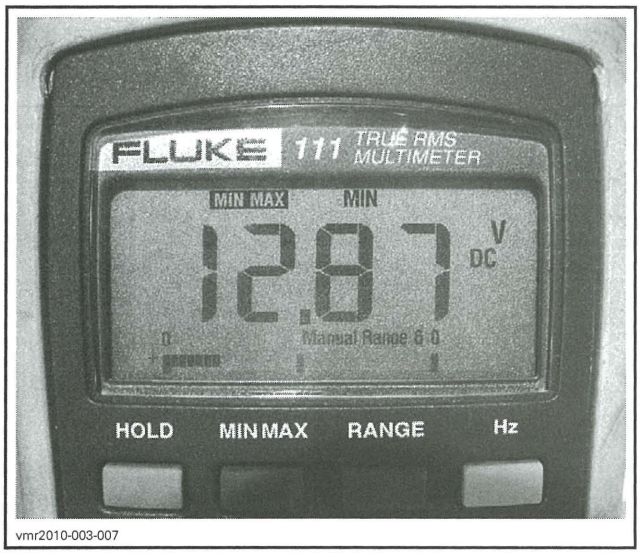

vmr2010-003-007

If the electrical system cannot sustain at least 12 Vdc, check the following:

- Battery
- Battery connections
- DPS unit power and ground connections
- Charging system
- Frame and engine ground studs.

If the previously listed items, carry out the following *DPS UNIT CURRENT TEST*.

DPS Unit Current Test

1. Connect vehicle to the latest B.U.D.S. software.
2. Click on the **Read Data** button.
3. Choose the **Monitoring** tab.
4. At the bottom of the **Monitoring** page, choose the **DPS** tab.

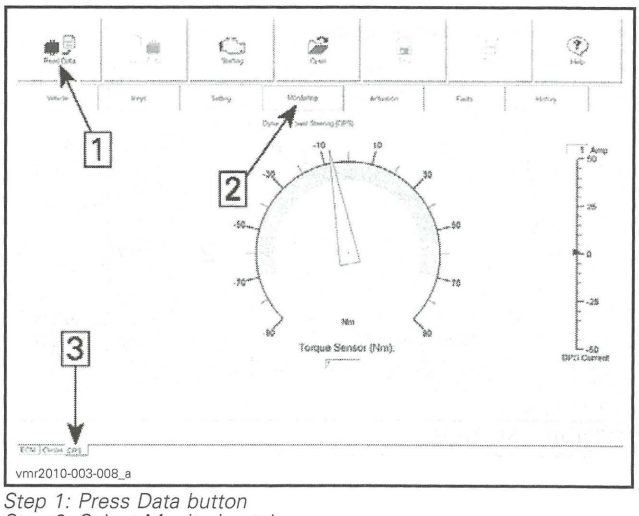

vmr2010-003-008_a

Step 1: Press Data button
Step 2: Select Monitoring tab
Step 3: Select DPS tab

5. With the vehicle engine running in PARK, turn the steering wheel side to side, momentarily against each steering hard stop and observe the indications on the B.U.D.S. DPS **Monitoring** page.

The DPS **Torque Sensor** increase with torque applied to steering wheel.

The **DPS Current** value should increase proportionately to the torque applied, and decrease with the torque as steering assist is provided.

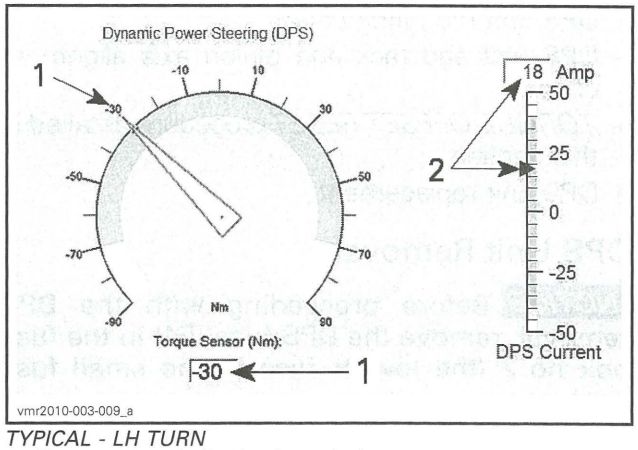

vmr2010-003-009_a

TYPICAL - LH TURN
1. *Torque sensor indication (negative)*
2. *DPS current indication (positive)*

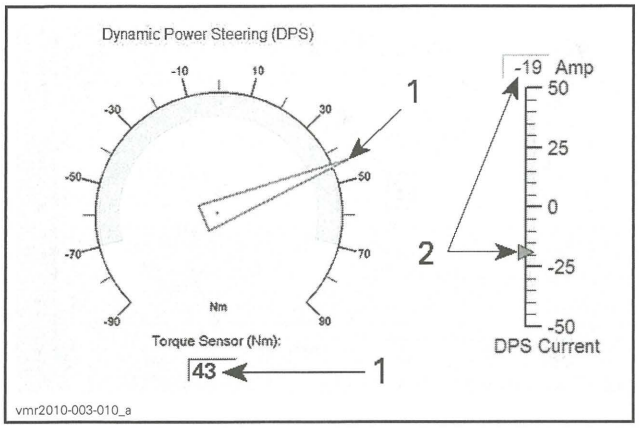

TYPICAL - RH TURN
1. *Torque sensor indication (positive)*
2. *DPS current indication (negative)*

NOTE: Increase and decrease in torque and current readings is very brief as steering assist is quickly provided. Current draw should remain within green scale but may momentarily peak to 60 amps, then drop off close to 0 amps as torque applied is nulled out by steering assist. If steering is held against hard stops the torque and current readings will remain high. After 5 seconds with constant torque, assist will be reduced slowly to 0 to protect internal components.

If current draw tends to remain high, carry out the following:

- Steering alignment check
- DPS unit mounting check
- DPS unit and rack and pinion axis alignment check
- *TORQUE OFFSET RESET* procedure detailed in this section
- DPS unit replacement.

DPS Unit Removal

NOTICE **Before proceeding with the DPS removal, remove the DPS fuse (F4) in the fuse box no. 2 (the lowest fuse in the small fuse box).**

1. Remove both front wheels.
2. Disconnect the 3 electrical connectors from the DPS unit.

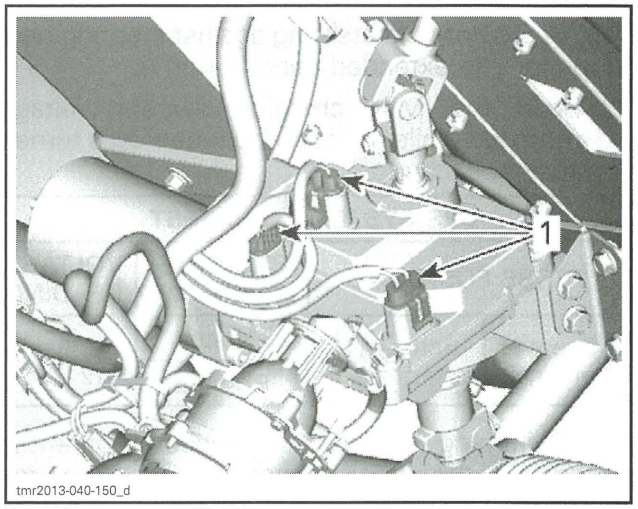

1. *DPS connectors (3x)*

3. Remove steering column. Refer to *STEERING SYSTEM* subsection.
4. Remove the DPS coupler pinch bolt and nut. Discard the nut.

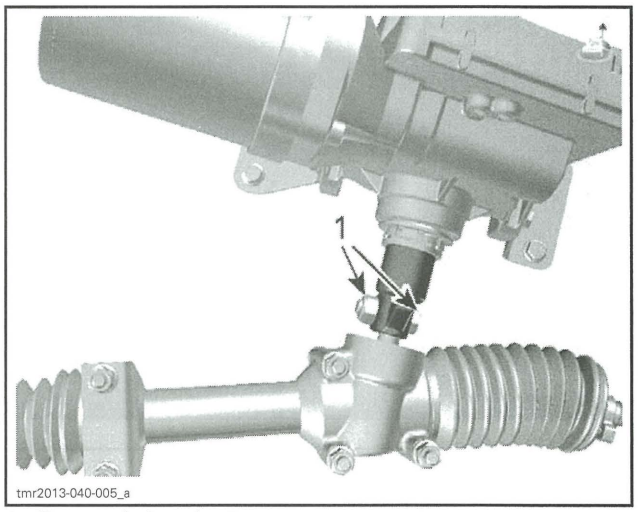

1. *Remove bolt and nut*

5. Remove all DPS unit retaining screws.

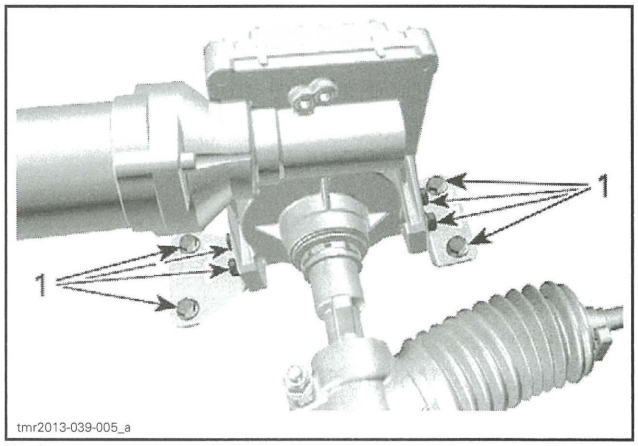

1. *Remove screws x8*

6. Pull up DPS unit to disengage from pinion shaft.
7. From RH side, remove DPS unit.

NOTICE When removing and laying down DPS unit, make sure to avoid any contact with magnetized object.

DPS Unit Inspection

Inspect DPS shaft splines. If damaged, replace DPS unit.

Inspect DPS coupler splines. If damaged, replace coupler. Refer to procedures in this subsection.

Inspect and clean terminal contacts.

DPS Unit Installation

1. Align front wheels in parallel to rear wheels.

NOTICE

The following installation sequence MUST be followed (see procedure details in upcoming paragraphs). Failure to do so may result in DPS misalignment and poor DPS operation due to an induced erroneous torque on DPS shaft or the impossibility to perform a torque sensor reset.

- Engage DPS coupler to pinion shaft.
- Loosely install pinch bolt on DPS coupler.
- Loosely install DPS unit to frame.
- Loosely install steering column and steering shaft.
- Loosely install pinch bolts on both ends of steering column.
- Torque DPS coupler pinch bolt.
- Secure DPS unit to frame.
- Torque steering column pinch bolt at DPS.
- Torque steering column pinch bolt at steering shaft.

2. Engage DPS coupler to pinion shaft. Ensure to align coupler opening opposite to blind teeth of pinion shaft.

⚠ CAUTION Indexing of coupler is required for proper locking on shaft.

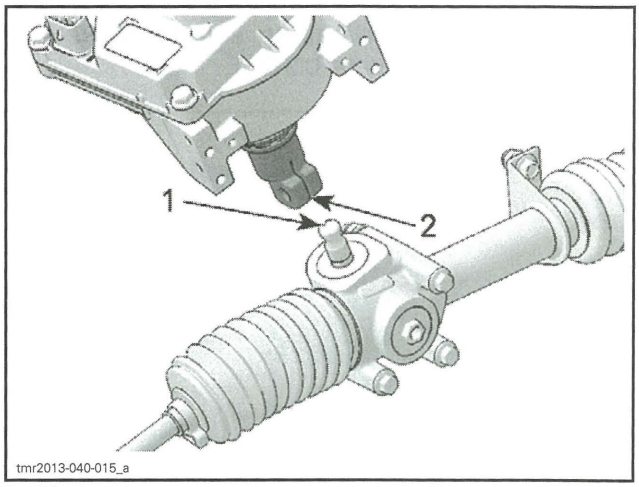

1. Blind teeth
2. Coupler opening

3. **Loosely** install the DPS coupler pinch bolt and a NEW nut.

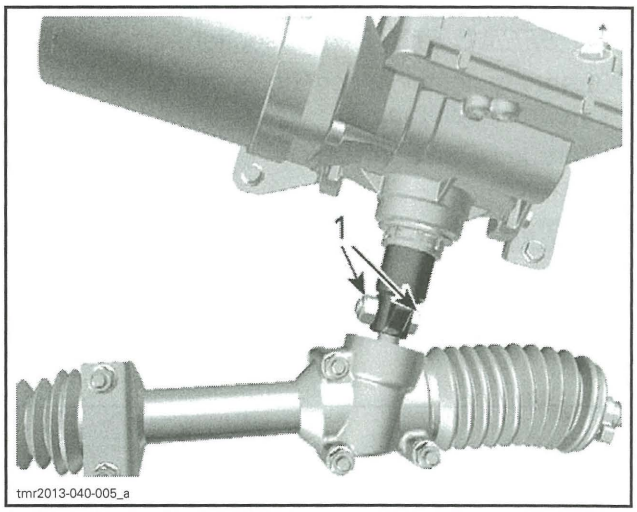

1. Loosely install bolt and nut

4. **Loosely** install mounting brackets to DPS unit.

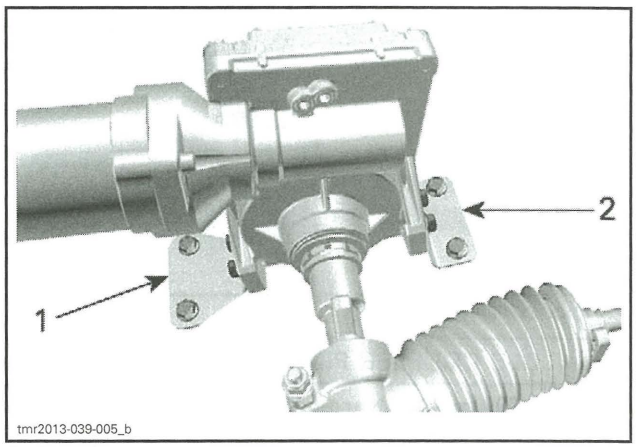

1. Long leg bracket
2. Short leg bracket

5. **Loosely** install DPS unit to frame.

NOTICE When installing screws make sure to keep both brackets LOOSE.

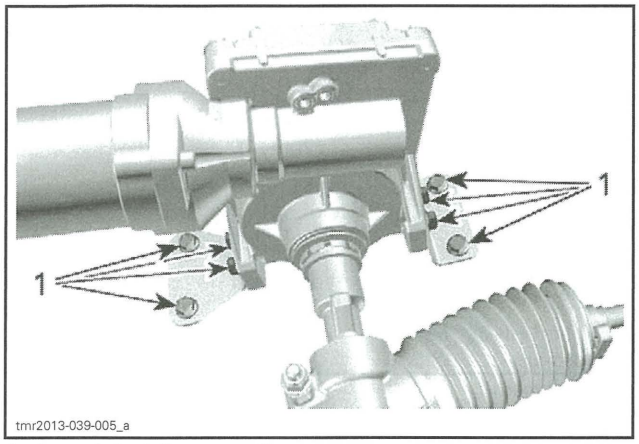

1. Loosely install screws x8

6. **Loosely** install steering column and steering shaft. Refer to steering column installation in *STEERING SYSTEM* subsection.
7. **Loosely** install pinch bolts on both ends of steering column.
8. Torque DPS coupler pinch bolt nut as per specification.

NOTICE Torquing pinch bolt nut at this time ensures proper axis alignment of DPS unit with the pinion shaft. Otherwise, an erroneous torque would be induced to the DPS shaft.

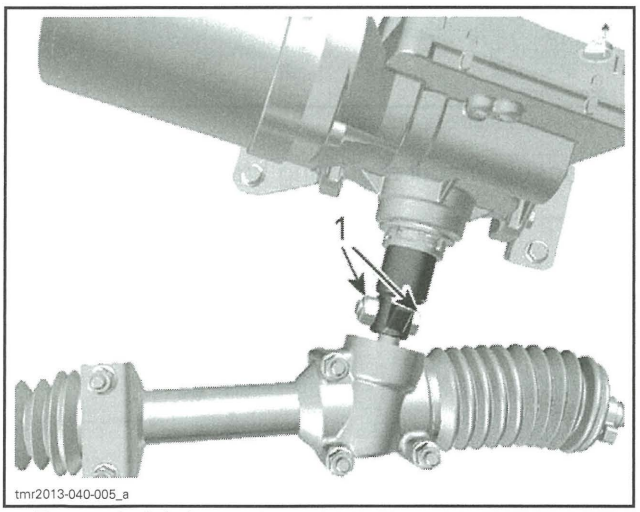

1. Torque pinch bolt nut

DPS COUPLER PINCH NUT TORQUE
70 N•m ± 5 N•m (52 lbf•ft ± 4 lbf•ft)

9. Secure DPS unit to frame **strictly as follows:**
   9.1 Ensure both DPS mounting brackets are LOOSE.
   9.2 Tighten mounting screws of one bracket to bring screw head close to bracket while keeping bracket LOOSE. Then do the same thing for the other bracket. When done, ENSURE BOTH BRACKETS ARE STILL LOOSE. Otherwise, loosen screws as required.

NOTICE

Before torquing screws, make sure to push in the corner of the bracket to remove any gap between bracket, frame and DPS unit.

The mounting brackets must NOT pull on the DPS unit. This would create an induced erroneous torque to the DPS shaft.

Keep pushing on bracket corner while torquing ALL screws.

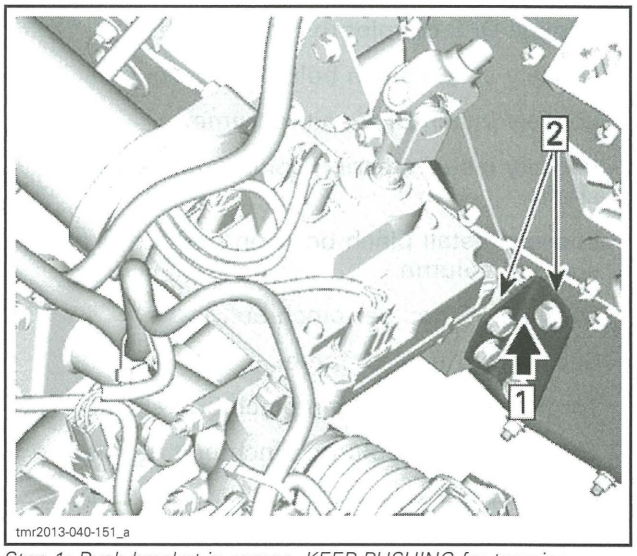

Step 1: Push bracket in corner. KEEP PUSHING for torquing
Step 2: NO gap here

   9.3 **FIRST:** Torque mounting screws **to frame** on one bracket. Then, torque screws to frame for the other bracket. Torque as per specification.

NOTICE Keep pushing on bracket corner to remove any gap between bracket and frame before torquing those screws.

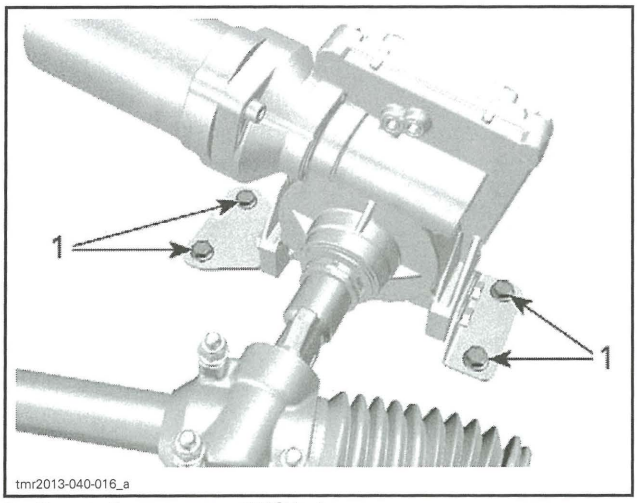

1. Torque these screws FIRST x4

9.4 **SECOND:** Torque mounting screws **to DPS unit** on one bracket. Then, torque screws to DPS unit for the other bracket. Torque as per specification.

NOTICE **Keep pushing on bracket corner to remove any gap between bracket and DPS unit before torquing those screws.**

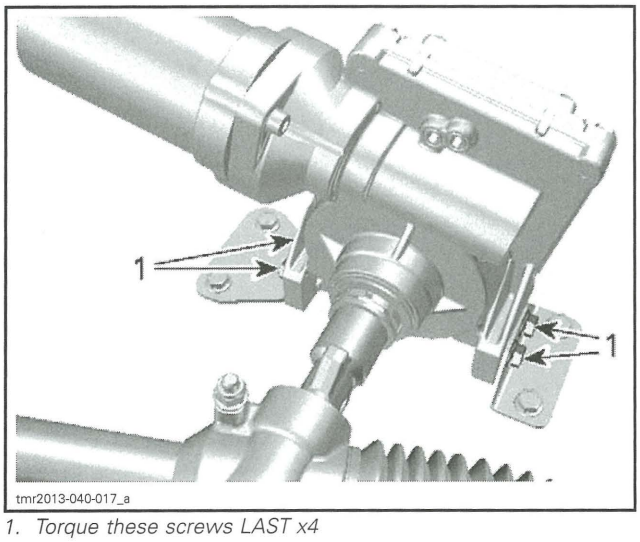

1. Torque these screws LAST x4

DPS UNIT MOUNTING SCREW TORQUE
32 N•m ± 3 N•m (24 lbf•ft ± 2 lbf•ft)

10. Torque pinch bolt of steering column at DPS. Then, torque pinch bolt of steering column at steering shaft. Refer to *STEERING SYSTEM* subsection.
11. Thoroughly dry DPS electrical connectors with compressed air.
12. Apply DIELECTRIC GREASE (P/N 293 550 004) on harness connector terminals.
13. Connect DPS connectors to DPS unit.
14. If installing a replacement DPS unit, refer to *DPS REPLACEMENT* in this subsection.
15. Check *STEERING ALIGNMENT*. Refer to *STEERING SYSTEM* subsection.

DPS System Final Verification

With the front wheels off the ground:

1. Start engine to enable DPS unit.
2. Slowly turn steering wheel from one side to the other 3 times.

Make sure:

- Assistance and travel are equal when turning right or left
- Steering system operates smoothly through all its range.

3. Lower vehicle on the ground.
4. Repeat step 2.

RESULT	ACTION
Uneven/incorrect steering behavior	Troubleshoot steering problem

5. Carry out a test ride of the vehicle to ensure proper operation of the DPS unit.

DPS Unit Replacement

New DPS units **do not** come with the required software programmed into the unit. A DPS unit fault will be generated when the vehicle is powered up. The check engine light will come on and a CHECK DPS message will appear in the multifunction gauge.

When DPS unit installation is complete, carry out the following steps.

1. Connect the vehicle to the latest B.U.D.S. software.
2. Select the **Read Data** button.
3. In the **Module** menu, choose the **DPS** submenu and install the latest DPS software **Update** file as applicable to the SSV model.

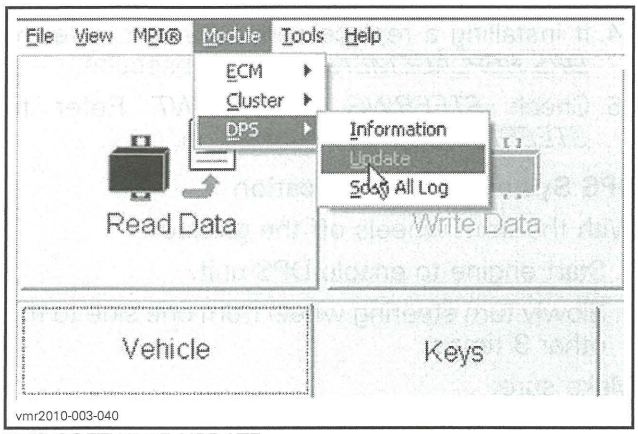

DPS SOFTWARE UPDATE

4. Once the correct DPS software file is installed, go to the **Faults** page and clear the fault codes.
5. Carry out the *TORQUE OFFSET RESET* procedure as described in this subsection.
6. Test drive the vehicle to ensure proper DPS operation.

DPS COUPLER

⚠ WARNING

Do not use a torch or arc welder on the coupler. Failure to comply will result in DPS unit malfunction.

DPS Coupler Removal

1. Remove DPS unit from vehicle. Refer to *DPS REMOVAL* in this subsection.

REQUIRED TOOL	
PITMAN ARM JIG (P/N 529 036 225)	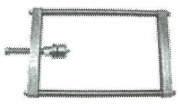

2. Install jig in a vise. Position shaft receptacle at the bottom.
3. Insert DPS input shaft in shaft receptacle.

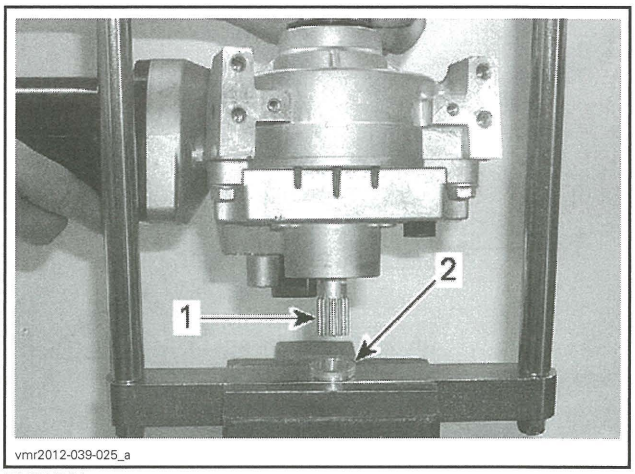

TYPICAL
1. *DPS input shaft*
2. *Shaft receptacle*

REQUIRED TOOL	
DPS POSITIONING ADAPTOR (P/N 529 036 248)	

4. Insert DPS positioning adaptor between DPS coupler and jig tip.

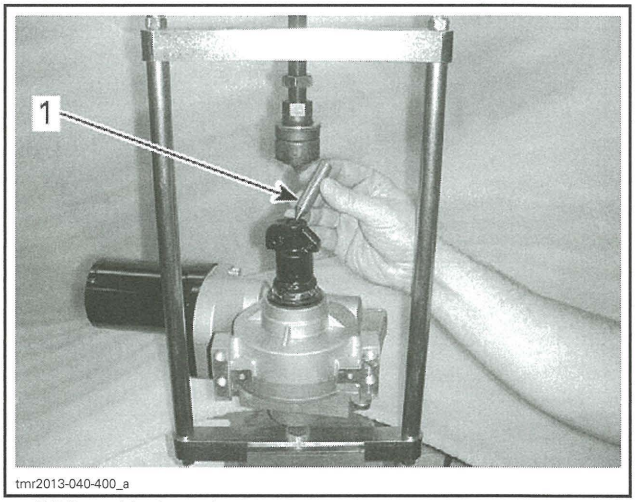

1. *DPS positioning adaptor*

5. Turn jig screw until its tip rests snugly in DPS positioning adaptor.
6. Turn jig nut down until it bottoms.

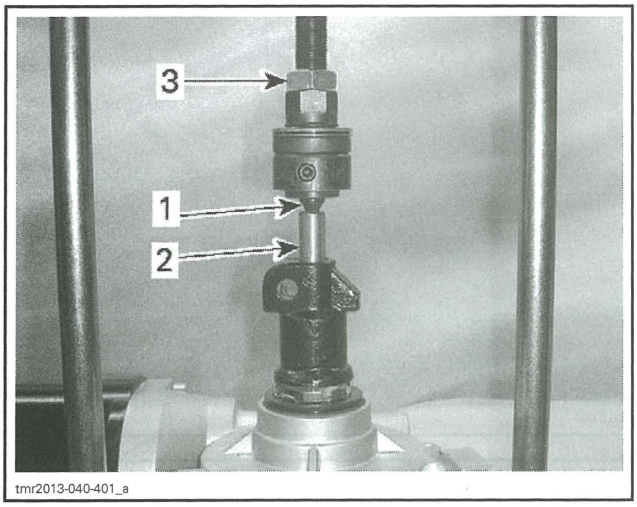

1. *Jig tip*
2. *DPS positioning adaptor*
3. *Jig nut bottomed here*

REQUIRED TOOL	
DPS COUPLER PULLER (P/N 529 036 247)	

7. Ensure there is no space between upper and lower part of jig tip.
8. Install puller over jig thrust bearing and DPS coupler.

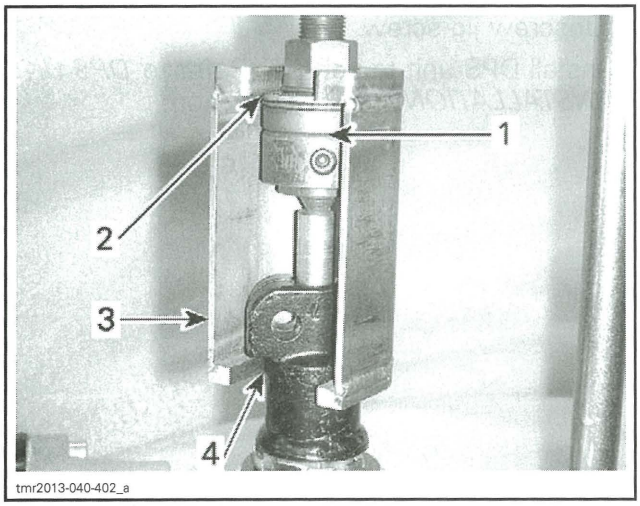

1. *No space here*
2. *Jig thrust bearing*
3. *Puller*
4. *DPS coupler*

9. Lock jig nut against its upper bar.

NOTE: Hold jig screw while tightening jig nut.

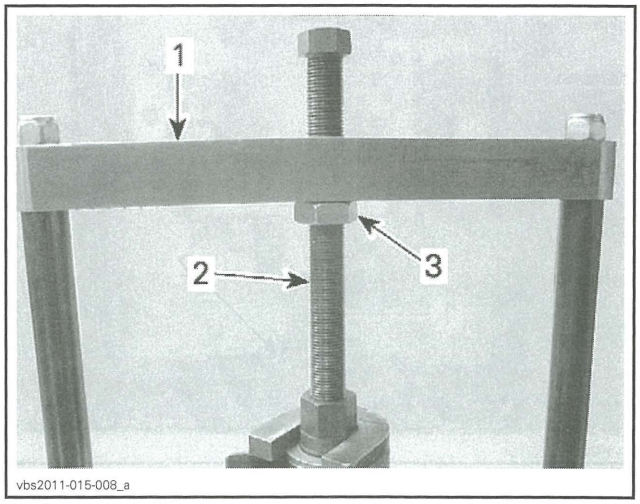

1. *Jig upper bar*
2. *Jig screw*
3. *Jig nut*

10. Holding jig screw, turn up jig nut to pull DPS coupler off.

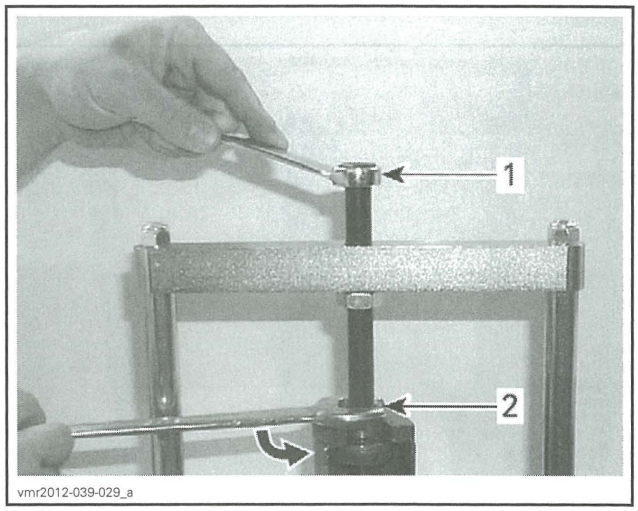

1. *Hold jig screw*
2. *Turn up jig nut*

DPS Coupler Installation

REQUIRED TOOL	
PITMAN ARM JIG (P/N 529 036 225)	

1. Install jig in a vise. Position shaft receptacle at the bottom.
2. Insert DPS input shaft in shaft receptacle.

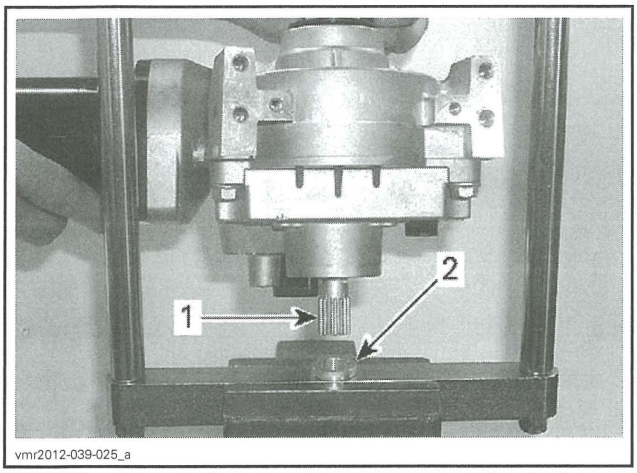

TYPICAL
1. *DPS input shaft*
2. *Shaft receptacle*

3. Install DPS coupler on DPS output shaft. No indexing is required.
4. Turn down jig screw until its tip is centered in DPS coupler.

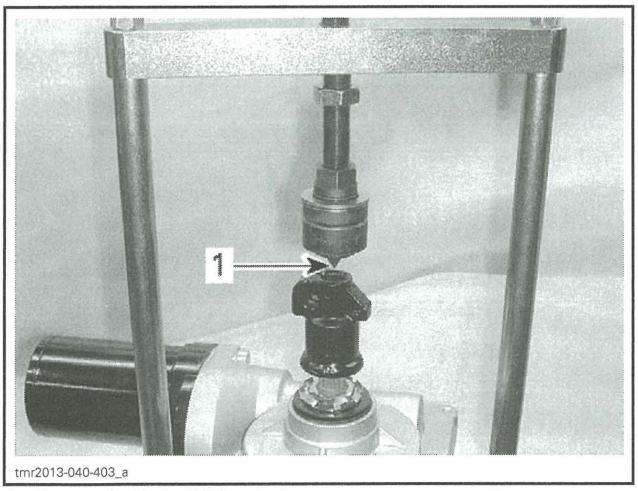

1. *Center jig tip in DPS coupler*

5. Turn jig screw down to push DPS coupler on DPS output shaft until it bottoms on the DPS nut.

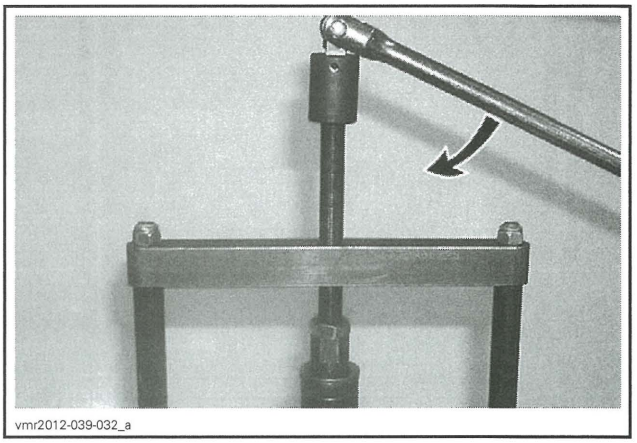

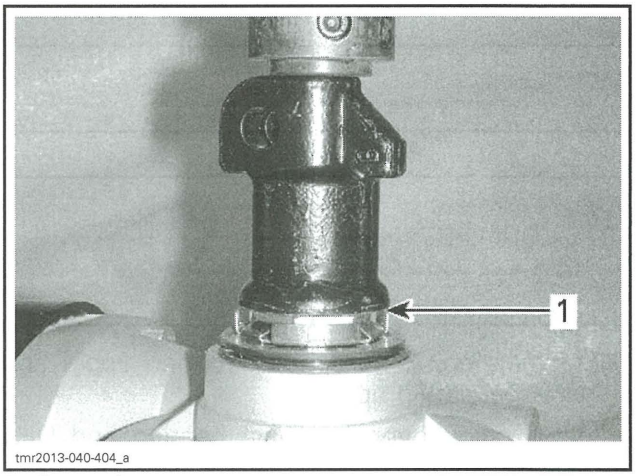

1. *Contact here*

6. Unscrew jig screw.
7. Install DPS unit to vehicle. Refer to *DPS UNIT INSTALLATION* in this subsection.

FRONT SUSPENSION

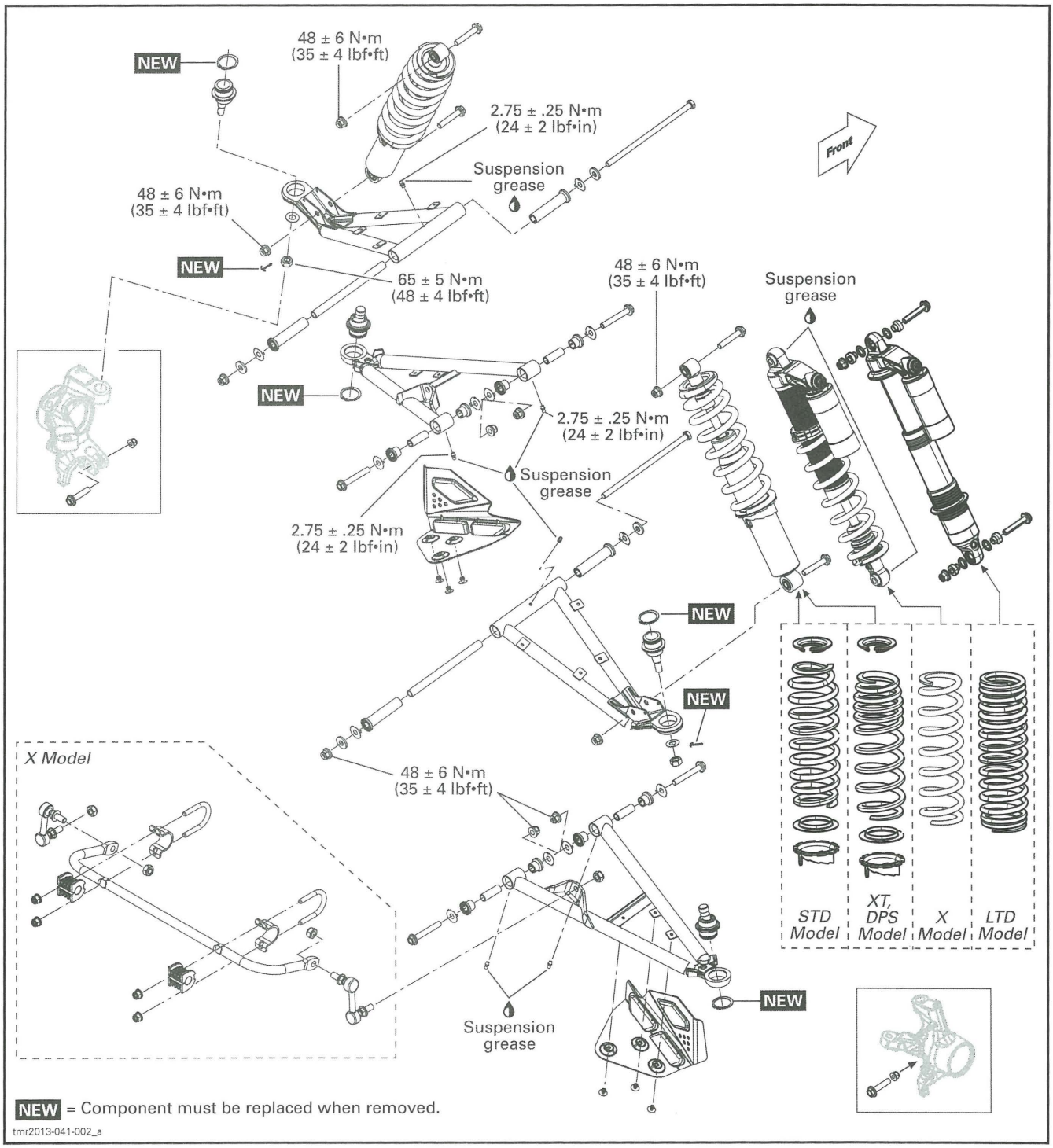

GENERAL

The procedure explained below is the same for the RH and LH sides unless otherwise noted.

On vehicles equipped with air controlled suspension (ACS), refer to *AIR CONTROLLED SUSPENSION (ACS)* section.

PROCEDURES

SHOCK ABSORBER

Shock Absorber Removal

1. Safely lift and support the vehicle of the ground. Refer to *INTRODUCTION* subsection.
2. Remove bolts and nuts retaining shock absorber.

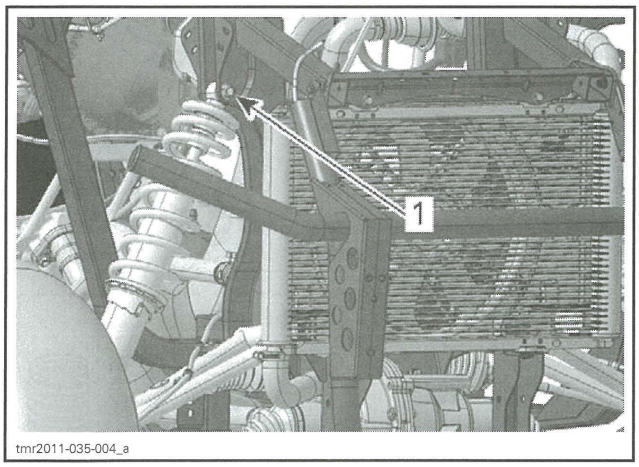

1. Upper bolt

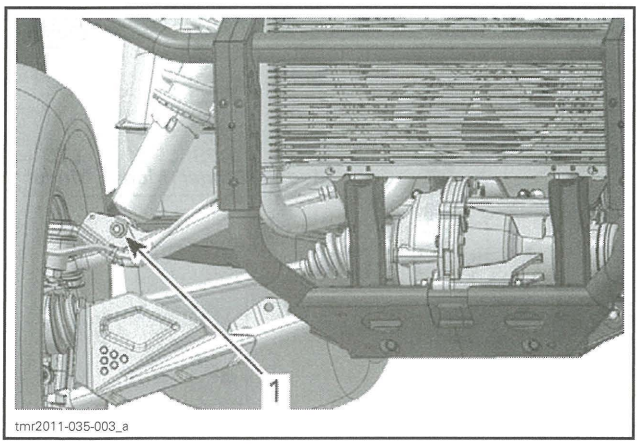

1. Lower bolt

3. Remove shock absorber.

Shock Absorber Inspection

Remove spring from shock absorber. Refer to *SPRINGS* in this subsection.

Secure the end of shock body in a vise with its rod upward.

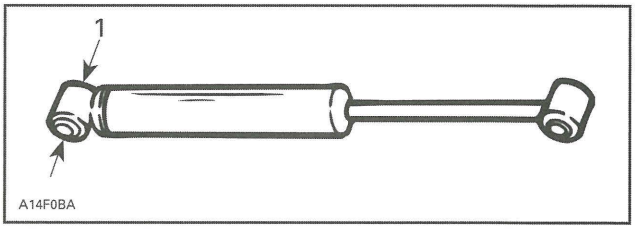

TYPICAL
1. Clamp here

NOTICE **Do not clamp directly on shock body.**

Extend and compress the piston several times over its entire stroke. Check that it moves smoothly and with uniform resistance with its rod upward.

Check the following conditions that will denote a defective shock:

- A skip or a hang back when reversing stroke at mid travel.
- Seizing or binding condition except at extreme end of either stroke.
- Oil leakage.
- A gurgling noise, after completing one full compression and extension stroke.

Replace if any faults are present.

Shock Absorber Installation

The installation is the reverse of the removal procedure. However, pay attention to the following.

Make sure to install the proper type of shock absorber **no. A** on the front of vehicle

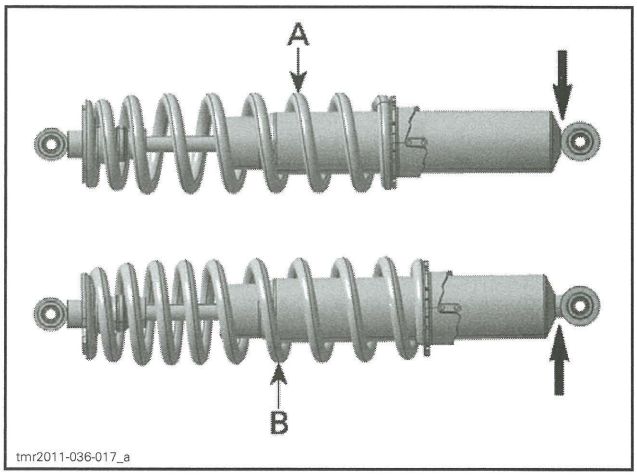

A. Front shock absorber (**without** *shock body extension)*
B. Rear shock absorber (**with** *shock body extension)*

SHOCK ABSORBER NUTS TORQUE
48 N•m ± 6 N•m (35 lbf•ft ± 4 lbf•ft)

SHOCK ABSORBER BUSHINGS

Refer to *SHOCK ABSORBER BUSHINGS* in *REAR SUSPENSION* subsection for complete procedures.

SPRINGS

Refer to *SPRINGS* in *REAR SUSPENSION* subsection for complete procedures.

LOWER SUSPENSION ARM

Lower Suspension Arm Removal

1. Safely lift and support the vehicle off the ground. Refer to *INTRODUCTION* subsection.
2. Remove wheel, refer to *WHEELS AND TIRES* subsection.

NOTE: For X model, disconnect anti-sway bar from suspension arm.

3. Remove bolt and nut securing lower ball joint to knuckle.

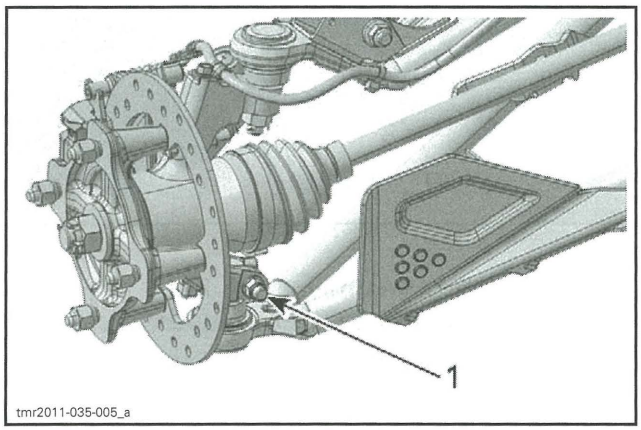

1. Ball joint nut

4. Remove bolts and nuts securing suspension arm to frame.

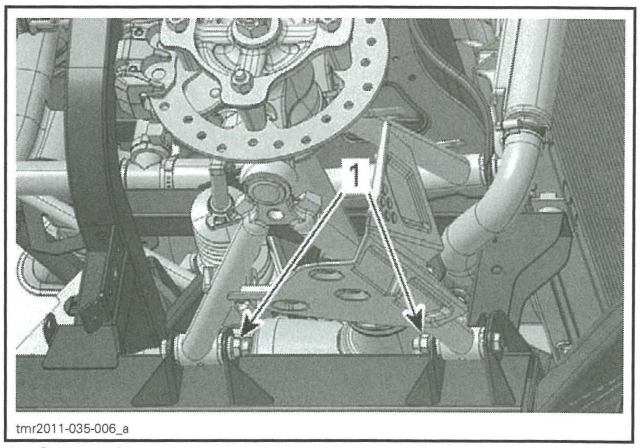

1. Suspension arm nuts

5. Remove suspension arm.

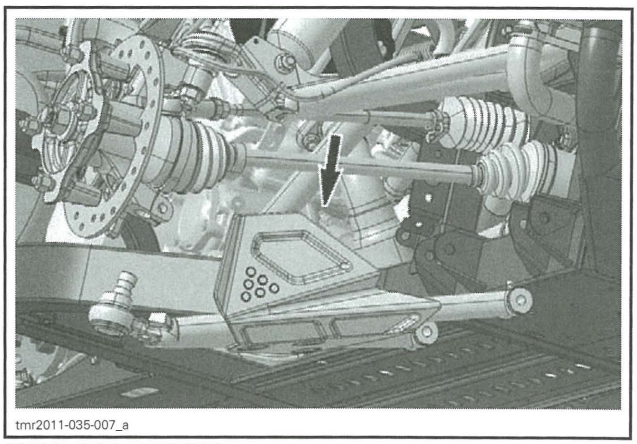

MOVE DOWNWARDS

Lower Suspension Arm Installation

The installation is the reverse of the removal procedure. However, pay attention to the following.

Lubricate suspension arm. Refer to *PERIODIC MAINTENANCE PROCEDURES* subsection.

UPPER SUSPENSION ARM

Upper Suspension Arm Removal

1. Safely lift and support the vehicle off the ground. Refer to *INTRODUCTION* subsection.
2. Remove wheel, refer to *WHEELS AND TIRES* subsection.
3. Remove fasteners retaining brake hose to vehicle.

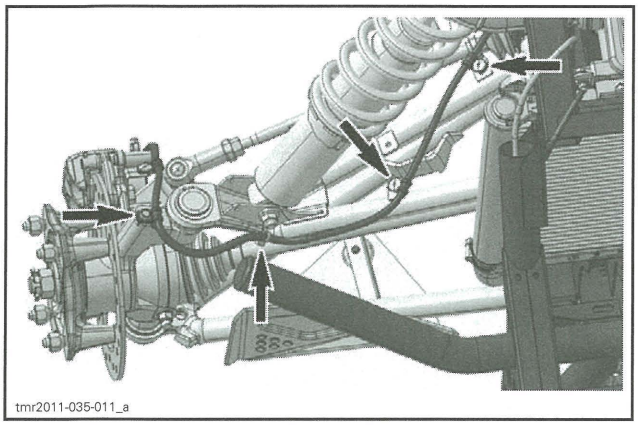

BRAKE HOSE FASTENERS (4X)

4. Remove and discard cotter pin retaining ball joint.

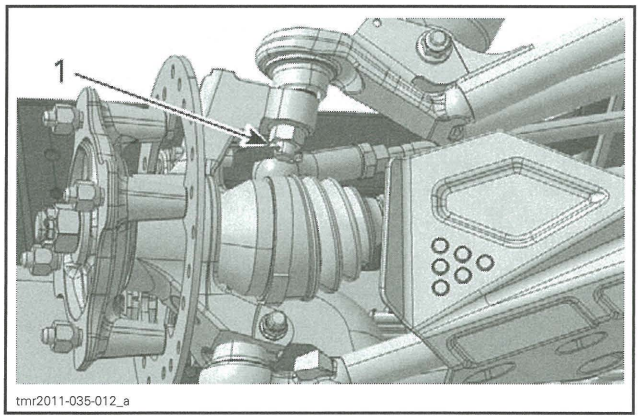

1. Ball joint cotter pin

5. Remove ball joint nut and washer.

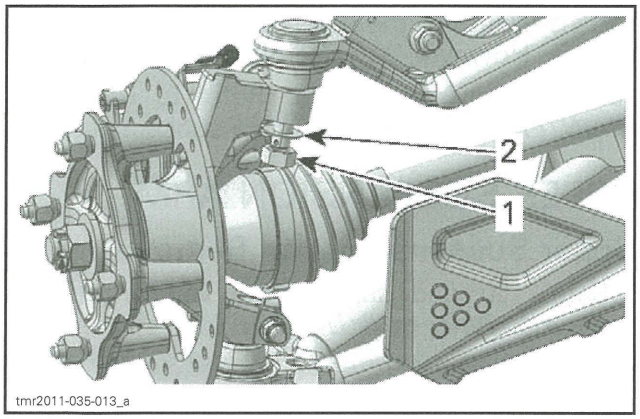

1. Ball joint nut
2. Ball joint hardened washer

6. Carefully move brake hose aside.
7. Using a plastic hammer, carefully hit on the knuckle side to separate ball joint from knuckle.

NOTE: A ball joint remover can be used if the ball joint is jammed into knuckle.

NOTICE Never hit on suspension arm to avoid to damage it permanently.

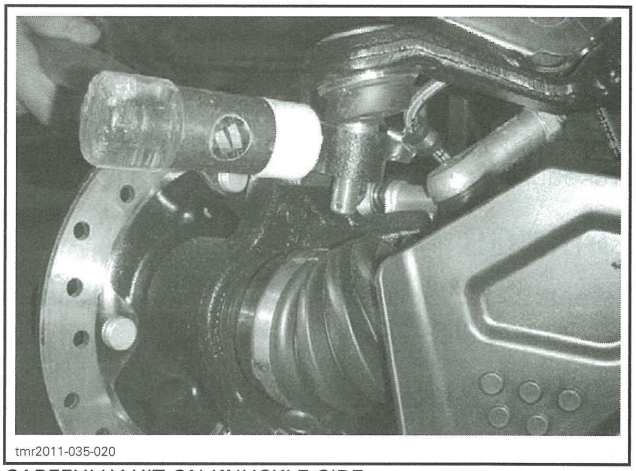

CAREFULLY HIT ON KNUCKLE SIDE

8. Remove bolt and nut securing suspension arm to shock absorber.

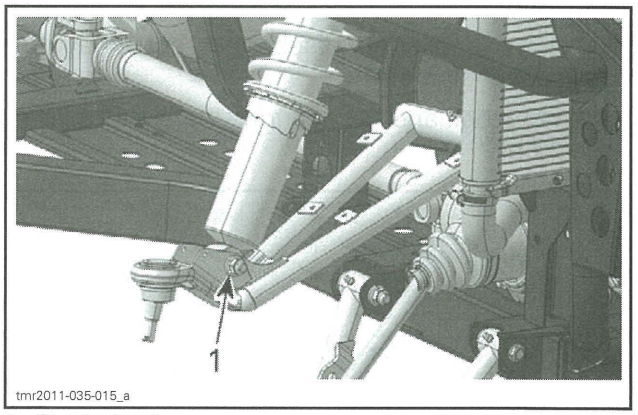

1. Shock absorber nut

9. Remove radiator from vehicle. Refer to *RADIATOR* in *COOLING SYSTEM* subsection.
10. Remove fasteners securing suspension arm to frame.

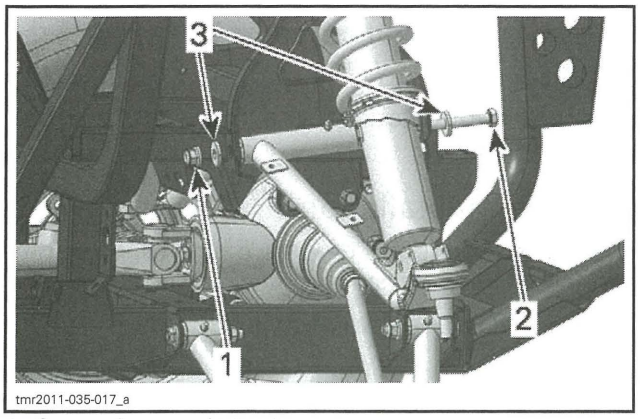

1. Suspension arm pivot nut
2. Suspension arm pivot bolt
3. Suspension arm pivot washers

11. Remove suspension arm.

Upper Suspension Arm Installation

The installation is the reverse of the removal procedure. However, pay attention to the following.

Refer to *COOLING SYSTEM* subsection for radiator installation.

NOTICE **Properly bleed cooling system. Refer to *COOLING SYSTEM* subsection.**

Lubricate suspension arm. Refer to *PERIODIC MAINTENANCE PROCEDURES* subsection.

Install a **NEW** cotter pin to secure ball joint nut. Both end of cotter pin must be folded.

SHOCK ABSORBER NUTS TORQUE
48 N•m ± 6 N•m (35 lbf•ft ± 4 lbf•ft)

SUSPENSION ARM BUSHINGS

Suspension Arm Bushings Removal

1. Remove wear plates, cushions and inner bushing from suspension arm.

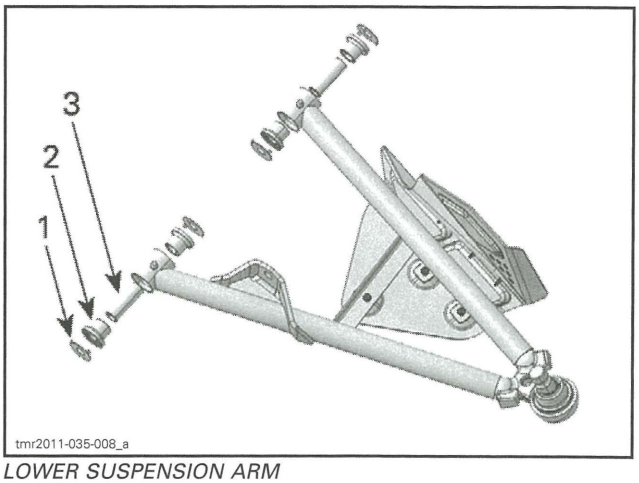

LOWER SUSPENSION ARM
1. Wear plate
2. Cushion
3. Inner bushing

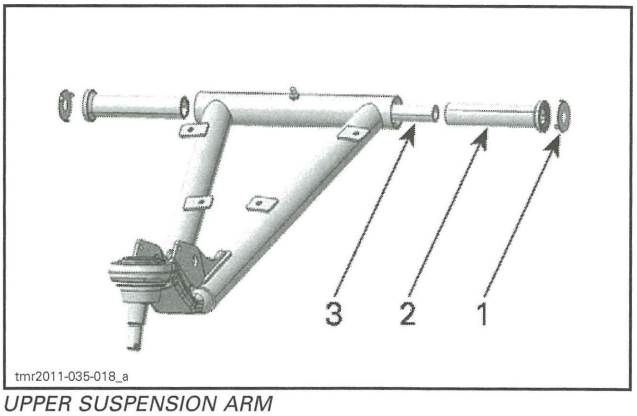

UPPER SUSPENSION ARM
1. Wear plate
2. Cushion
3. Inner bushing

Suspension Arm Bushings Installation

The installation is the reverse of the removal procedure. However, pay attention to the following.

Lubricate suspension arm. Refer to *PERIODIC MAINTENANCE PROCEDURES* subsection.

BALL JOINTS

Ball Joint Removal

1. Remove suspension arm from vehicle. Refer to *SUSPENSION ARM REMOVAL* in this subsection.
2. Remove circlip from ball joint.

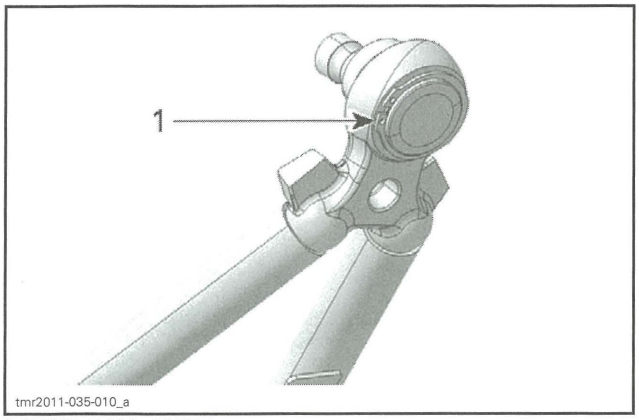

LOWER BALL JOINT
1. Circlip

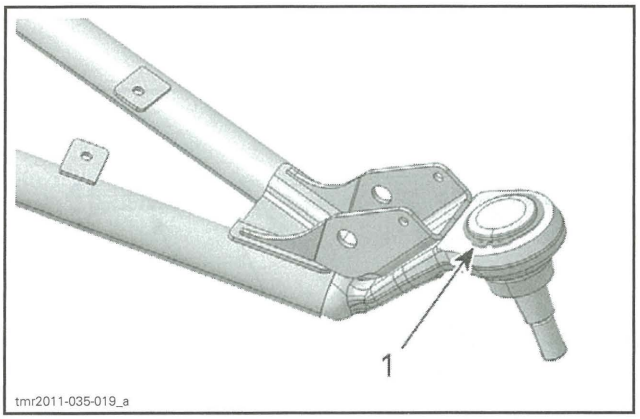

UPPER BALL JOINT
1. Circlip

3. Install suspension arm on a press.
4. Use an appropriate ball joint remover.

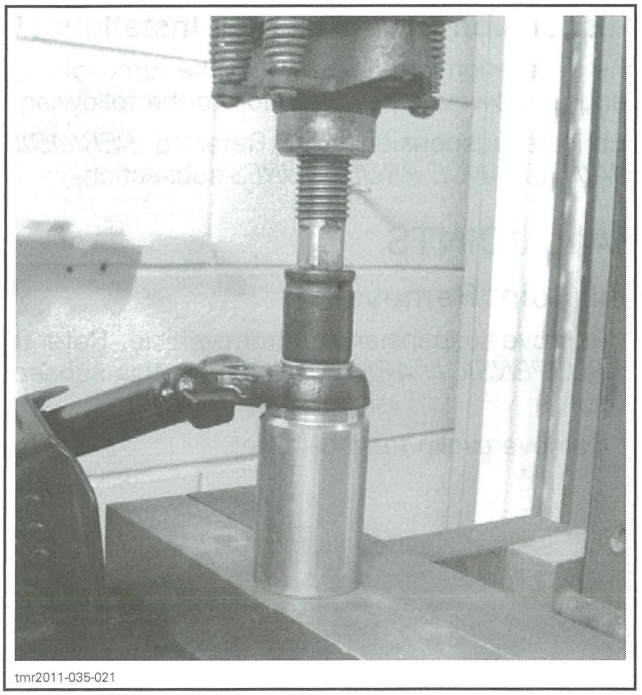

5. Remove ball joint from suspension arm.

NOTICE **Make sure that suspension arm is properly supported on the press during ball joint removal.**

Ball Joint Installation

The installation is the reverse of the removal procedure. However, pay attention to the following.

Install a **NEW** circlip to secure ball joint.

REAR SUSPENSION

SERVICE TOOLS

Description	Part Number	Page
SPRING COMPRESSOR	529 036 184	383

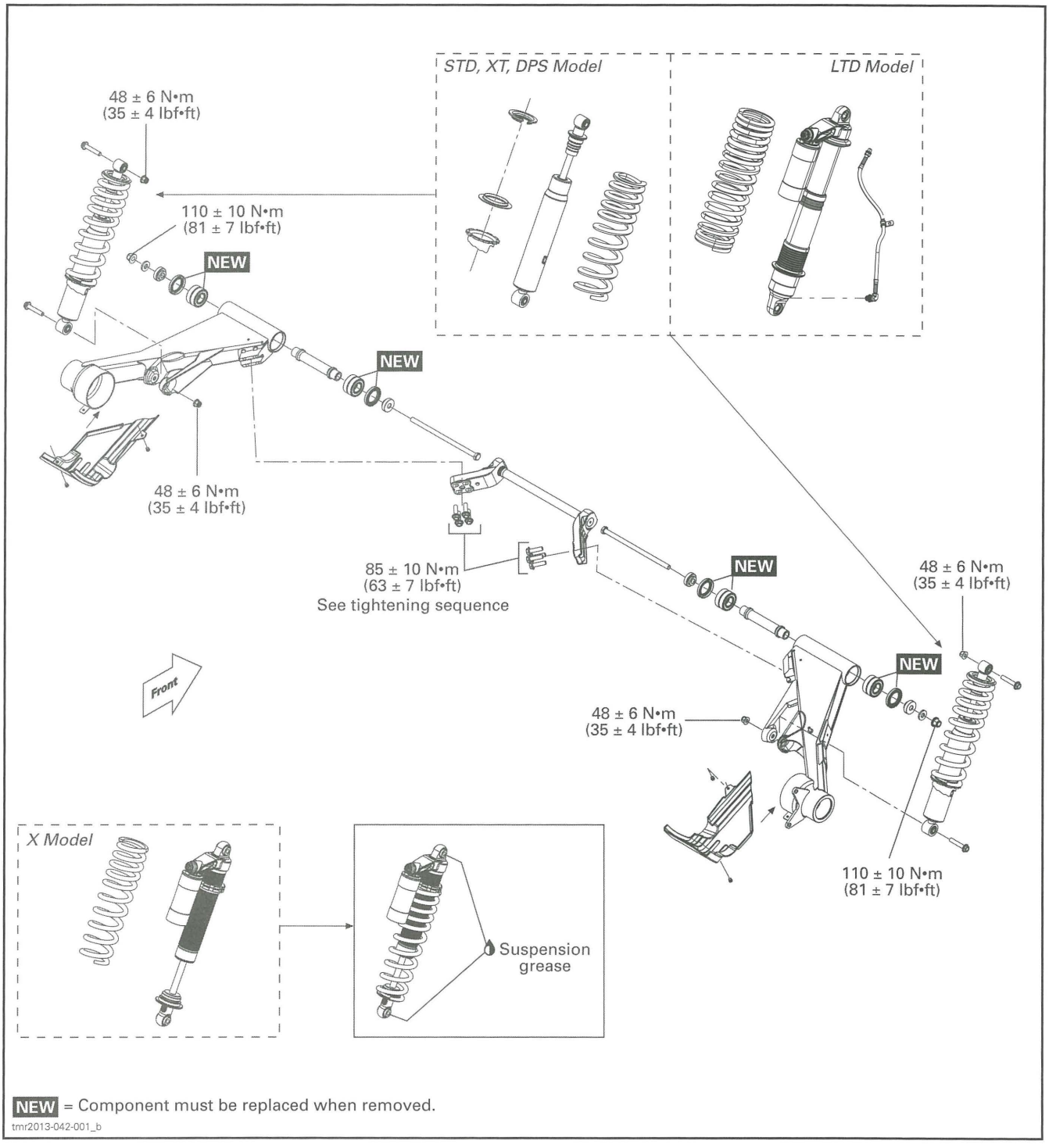

GENERAL

The procedure described below is the same for the RH and LH sides, unless otherwise instructed.

On vehicles equipped with air controlled suspension (ACS), refer to *AIR CONTROLLED SUSPENSION (ACS)* section.

PROCEDURES

SHOCK ABSORBERS

Shock Absorber Removal

1. Safely lift and support the vehicle off the ground. Refer to *INTRODUCTION* subsection.
2. Open cargo box.
3. Remove bolts and nuts retaining shock absorber.

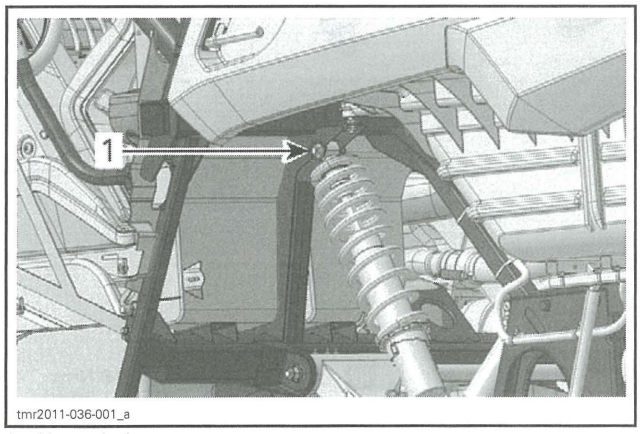

1. Upper bolt

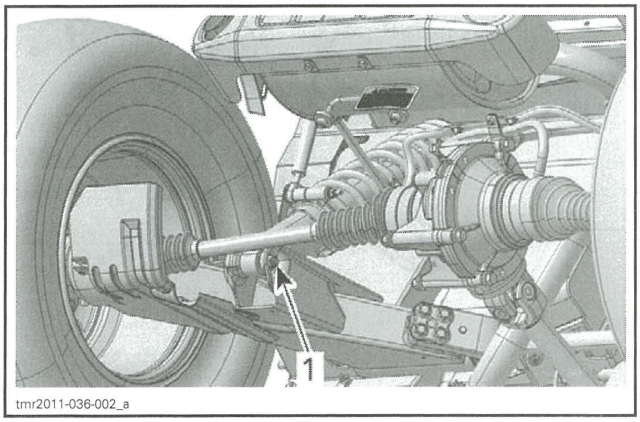

1. Lower bolt

4. Remove shock absorber.

Shock Absorber Inspection

Remove spring from shock absorber. Refer to *SPRINGS* in this subsection.

Secure the end of shock body in a vise with its rod upward.

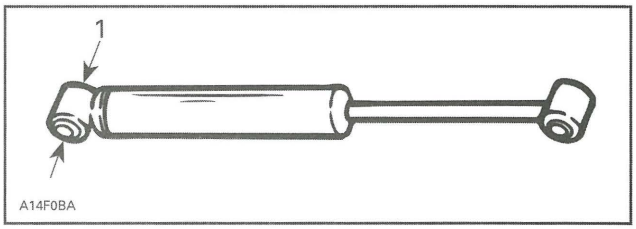

TYPICAL
1. Clamp here

NOTICE **Do not clamp directly on shock body.**

Extend and compress the piston several times over its entire stroke. Check that it moves smoothly and with uniform resistance with its rod upward.

Check the following conditions that will denote a defective shock:

- A skip or a hang back when reversing stroke at mid travel.
- Seizing or binding condition except at extreme end of either stroke.
- Oil leakage.
- A gurgling noise, after completing one full compression and extension stroke.

Replace if any faults are present.

Shock Absorber Installation

The installation is the reverse of the removal procedure. However, pay attention to the following.

Make sure to install the proper type of shock absorber **no. B** on the rear of vehicle.

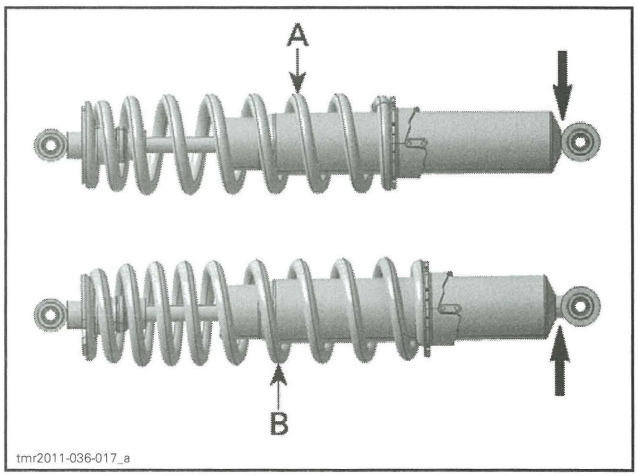

A. Front shock absorber (**without** *shock body extension)*
B. Rear shock absorber (**with** *shock body extension)*

SHOCK ABSORBER NUTS TORQUE
48 N•m ± 6 N•m (35 lbf•ft ± 4 lbf•ft)

SHOCK ABSORBER BUSHINGS

Shock Absorber Bushing Replacement

All Shock Absorbers Except HPG with Remote Reservoir

1. Remove shock absorber from vehicle. Refer to *SHOCK ABSORBERS* in this subsection.
2. Install shock absorber on a press.
3. Use an appropriate socket to push bushing.

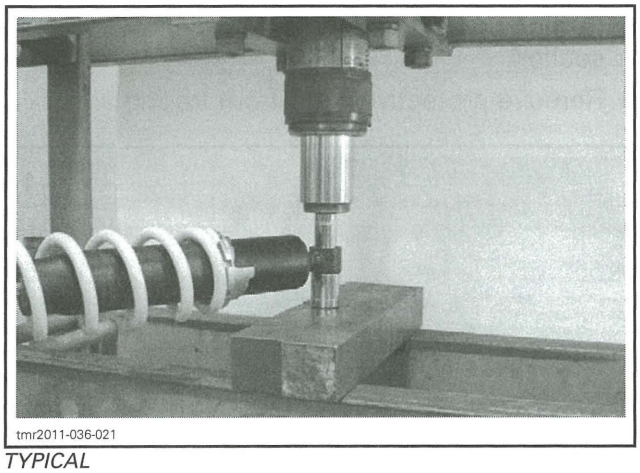
tmr2011-036-021

TYPICAL

4. Remove bushing from shock absorber.

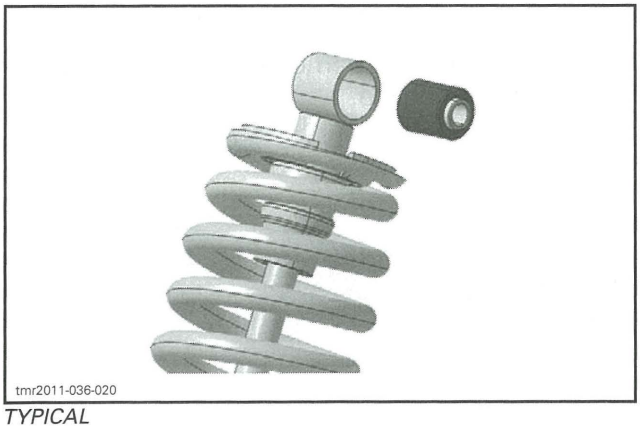
tmr2011-036-020

TYPICAL

5. Install a **NEW** bushing as the reverse of removal.
6. Install shock absorber on vehicle.

SPRINGS

Spring Removal

1. Remove shock absorber from vehicle. Refer to *SHOCK ABSORBERS* in this subsection.
2. Use SPRING COMPRESSOR (P/N 529 036 184).

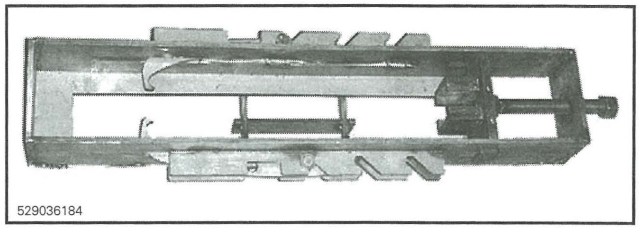
529036184

3. Place the tool in a vise.
4. Position the shock absorber in the tool.
5. Install the spring compressor pins.
6. Tighten spring remover screw until the spring is sufficiently compressed to remove spring cap.
7. Remove spring cap from shock absorber.
8. Release spring remover screw.
9. Remove spring from shock absorber.

Spring Inspection

Inspect the spring for damage.

Replace if necessary.

Spring Installation

The installation is the reverse of the removal procedure. However, pay attention to the following.

Install spring cap opening at 180° from spring stopper opening.

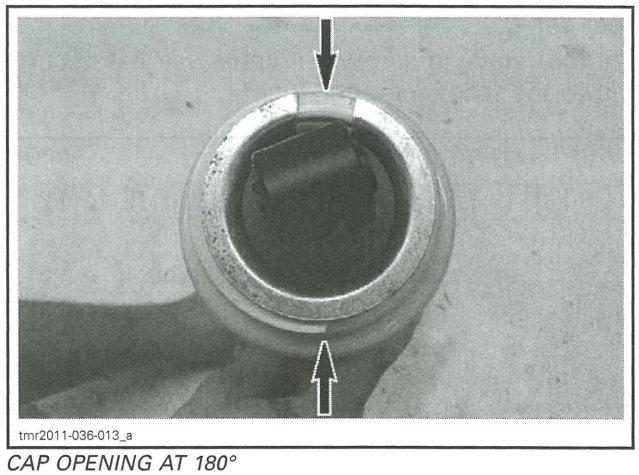
tmr2011-036-013_a

CAP OPENING AT 180°

ANTI-SWAY BAR

Anti-Sway Bar Removal

1. Safely lift and support the vehicle off the ground. Refer to *INTRODUCTION* subsection.
2. Open cargo box.
3. Remove anti-sway bar retaining screws (4 on each side).

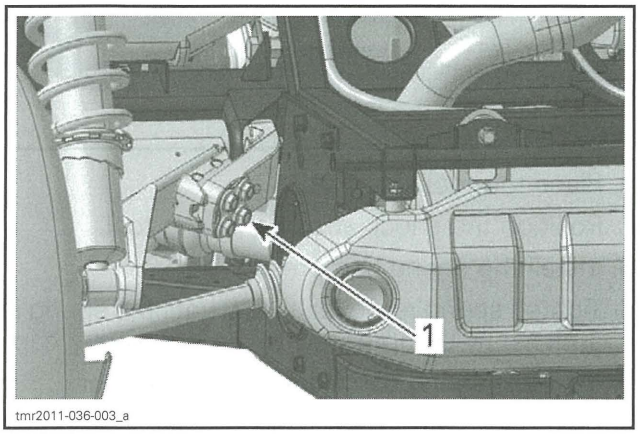

1. Anti-sway bar retaining screw

4. Remove anti-sway bar.

Anti-Sway Bar Inspection

Check anti-sway bar for cracks, bending or other damages.

Replace if necessary.

Anti-Sway Bar Installation

The installation is the reverse of the removal procedure. However, pay attention to the following.

Install all retaining screws of anti-sway bar loosely first.

Torque retaining screws of anti-sway bar according to the following sequence.

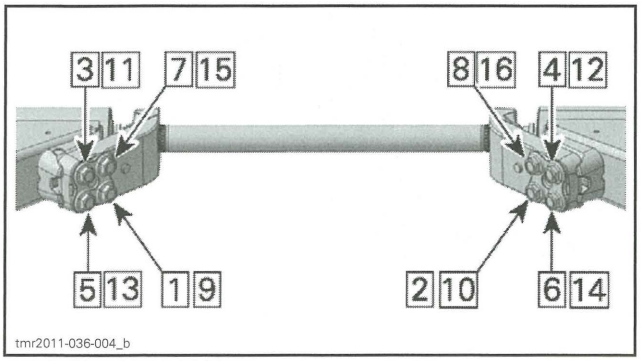

ANTI-SWAY BAR TIGHTENING SEQUENCE

ANTI-SWAY BAR SCREWS TORQUE
85 N•m ± 10 N•m (63 lbf•ft ± 7 lbf•ft)

TRAILING ARM

Trailing Arm Removal

1. Safely lift and support the vehicle off the ground. Refer to *INTRODUCTION* subsection.
2. Remove wheel, refer to *WHEELS AND TIRES* subsection.
3. Open cargo box.
4. Remove anti-sway bar, refer to *ANTI-SWAY BAR REMOVAL* in this subsection.
5. Remove wheel hub, refer to *REAR DRIVE* subsection.
6. Remove protective plate from trailing arm.

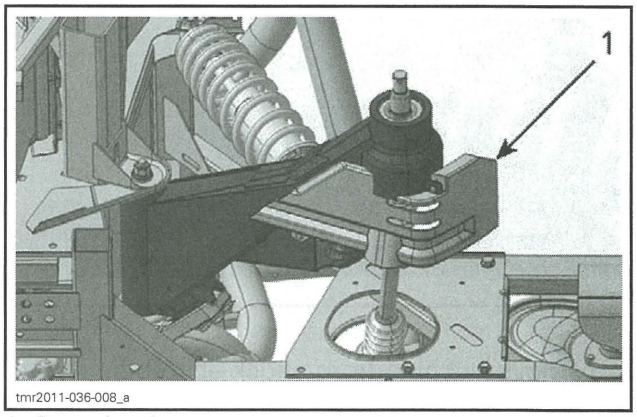

1. Protective plate

NOTE: If applicable, remove fasteners retaining brake hose to vehicle.

7. Remove nut and washer securing trailing arm pivot.

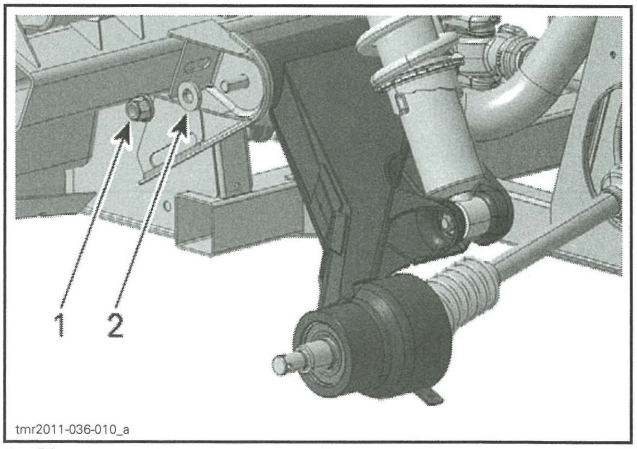

1. Pivot nut
2. Pivot washer

8. Remove lower nut retaining shock absorber.

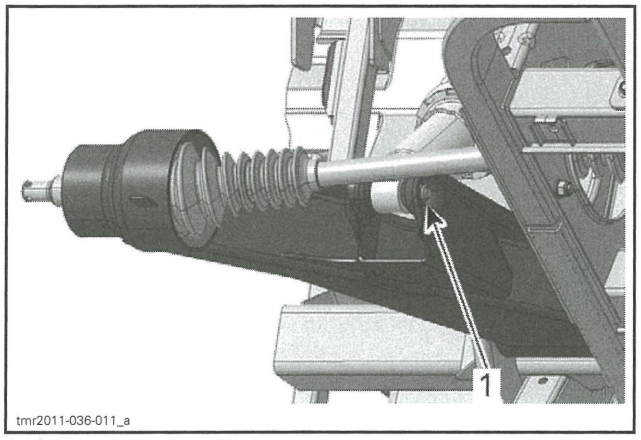

1. Lower nut

9. Firmly hold trailing arm then remove:
   - Shock absorber lower bolt
   - Trailing arm pivot bolt and washer.

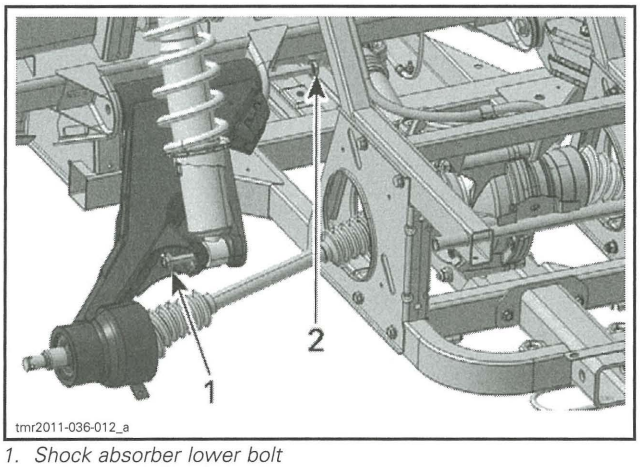

1. Shock absorber lower bolt
2. Trailing arm pivot bolt

10. Remove trailing arm from vehicle.

Trailing Arm Disassembly

Drive Shaft Bearing Removal

1. Remove circlip securing bearing into trailing arm.

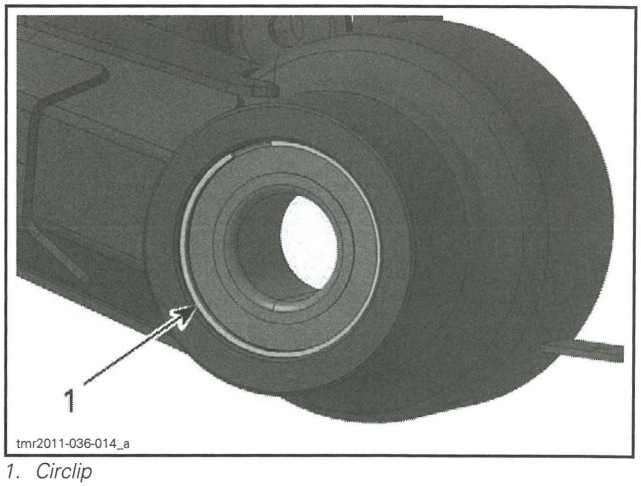

1. Circlip

2. Install trailing arm on a press.
3. Use an appropriate bearing remover.
4. Remove drive shaft bearing from trailing arm.

Trailing Arm Pivot Bearing Removal

1. Remove both spacers and seals from trailing arm pivot.

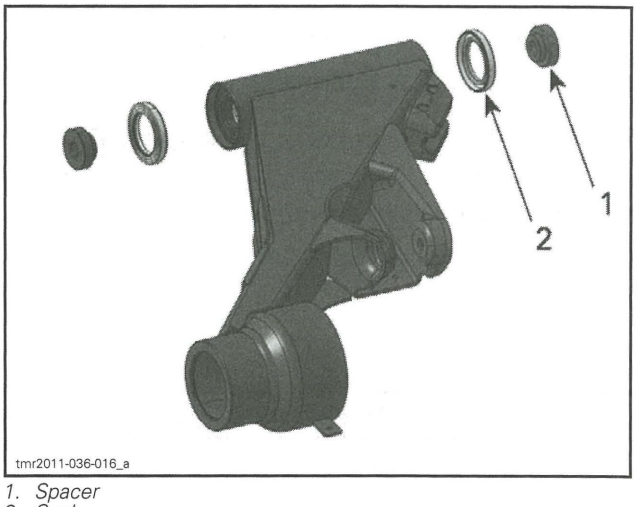

1. Spacer
2. Seal

2. Install trailing arm on a press.
3. Use an appropriate bearing remover.
4. Remove pivot bearings and bushing from trailing arm.

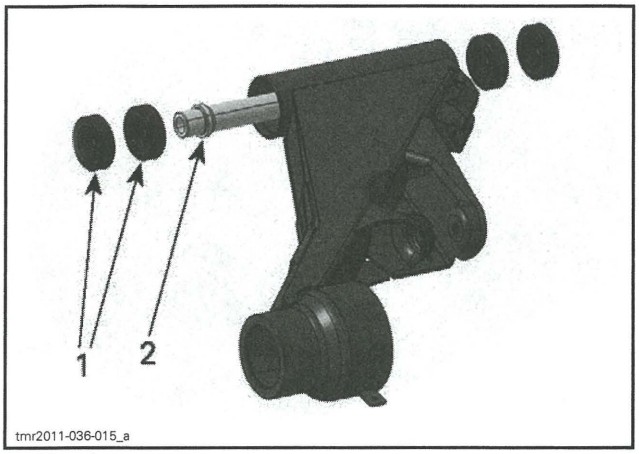

1. Pivot bearings
2. Pivot bushing

Trailing Arm Inspection

Check trailing arms for:
- Cracks
- Bending.

Check seals condition.

Check inner race of each pivot bearing with your finger:
- Bearings should turn smoothly and quietly.

Replace all damaged parts.

Trailing Arm Assembly and Installation

The installation is the reverse of the removal procedure. However, pay attention to the following.

Install the following **NEW** parts:
- Pivot bearings
- Seals
- Circlip.

TRAILING ARM PIVOT NUT TORQUE
110 N•m ± 10 N•m (81 lbf•ft ± 7 lbf•ft)

AIR CONTROLLED SUSPENSION (ACS)

SERVICE TOOLS

Description	Part Number	Page
FLUKE 115 MULTIMETER	529 035 868	400–404, 406–408

ACS FRONT SUSPENSION

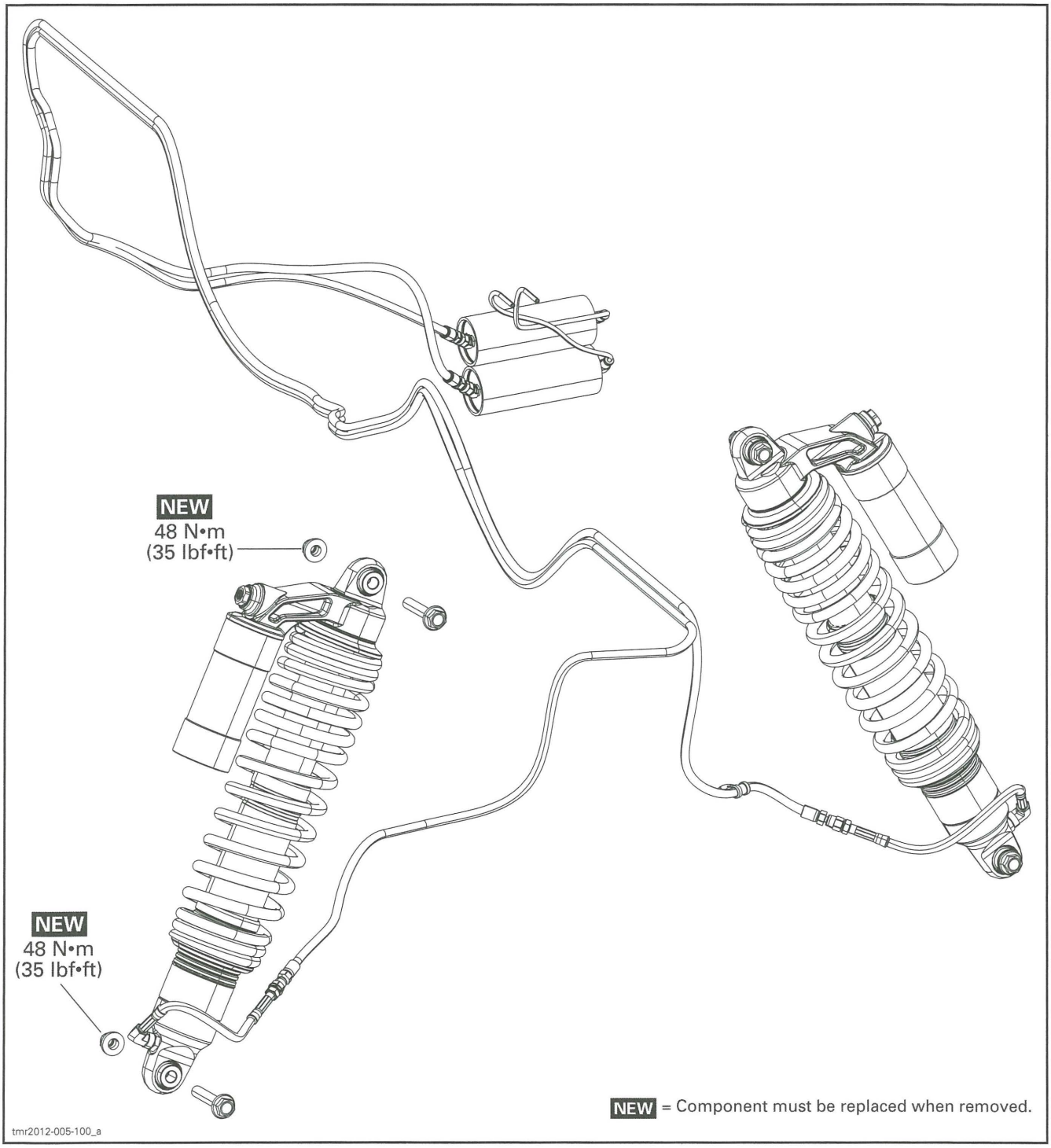

ACS REAR SUSPENSION

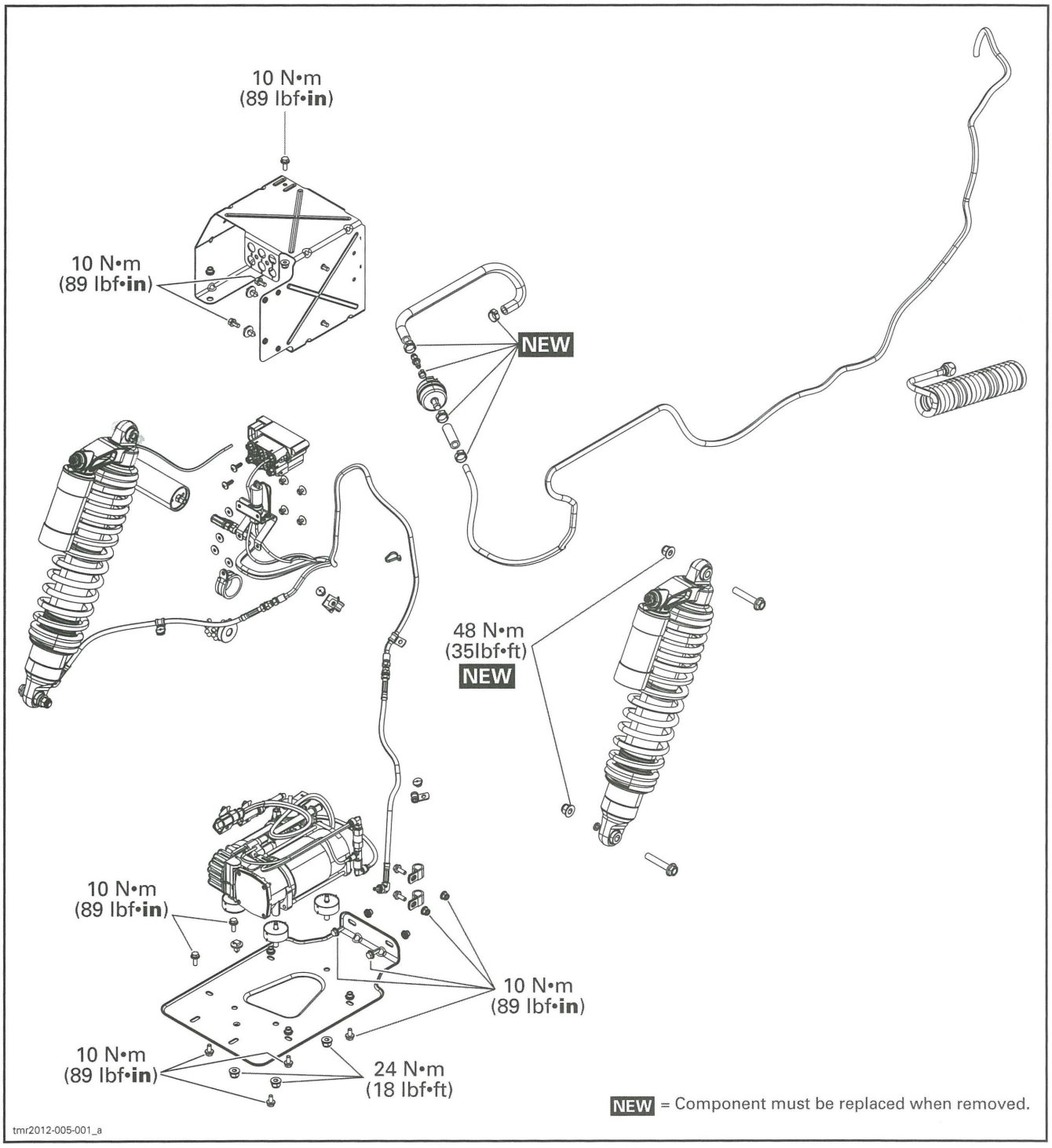

GENERAL

Be careful while manipulating nylon hoses, they must not be kinked.

Vehicle must be running to adjust ACS suspension or perform certain tests.

⚠ CAUTION Always wear safety goggles when working with pressurized air system.

⚠ CAUTION The ACS suspension system may be under high pressure (over 900 kPa (130 PSI)). Release air pressure prior to working on the system. Refer to *AIR PRESSURE RELEASE FOR SERVICING*.

SYSTEM DESCRIPTION (OPERATION)

The Commander LTD comes equipped with front and rear air-controlled suspension and HPG shocks with remote reservoir (piggyback).

By changing the ACS setting, air pressure in the front and rear shocks absorbers will change to provide a multitude of different suspension adjustments.

The ACS adjusts the front and rear shocks to 6 rider selectable levels depending on trail conditions or riders preference.

The front shocks pressure is lower than the rear shocks. The pressure are determined by the setting position.

This system allows the operator to adjust the front and rear suspension by pressing the suspension button.

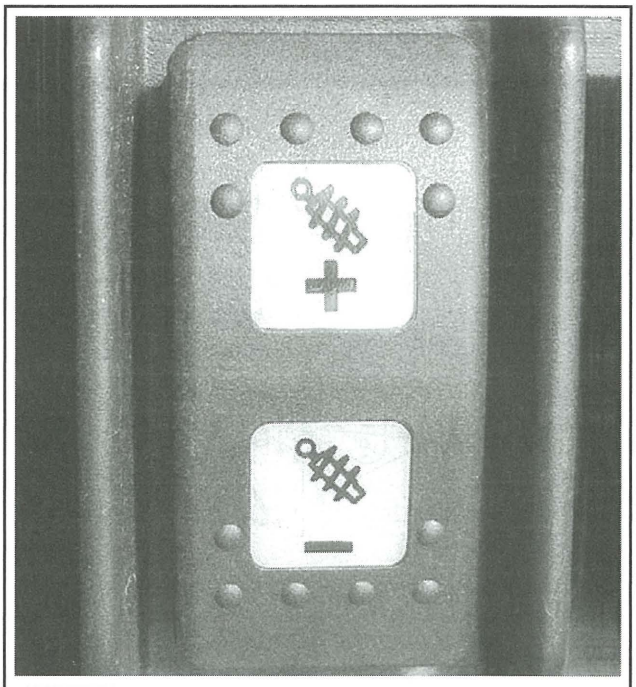

vdd2012-001-712

⚠ WARNING

Always adjust the ACS suspension setting according to load, riding condition, and speed.

NOTE: The ACS suspension will NOT self-adjust unless the engine is running, even when key switch is set to on.

The ACS has 2 modes for suspension adjustment:
- ACS auto mode
- ACS manual mode.

NOTE: The DPS is prioritized and as a result, when the DPS is heavily used, the ACS commands will be queued and executed when the DPS amp usage drops below a certain level.

ACS AUTO Mode

The automatic mode allows for simultaneous adjustments on the front and rear suspensions.

In auto mode, the suspension will automatically be adjusted to the preselected riding comfort position.

ACS SUSPENSION SETTINGS		
SETTING	RIDING COMFORT	RECOMMENDED LOAD
ACS 1	Softest	Operator only
ACS 2	Soft	
ACS 3	Semi-soft	Transporting a passenger **OR** a cargo
ACS 4	Semi-firm	
ACS 5	Firm with high ground clearance	Transporting a passenger **AND** a cargo
ACS 6	Firmest and highest ground clearance	

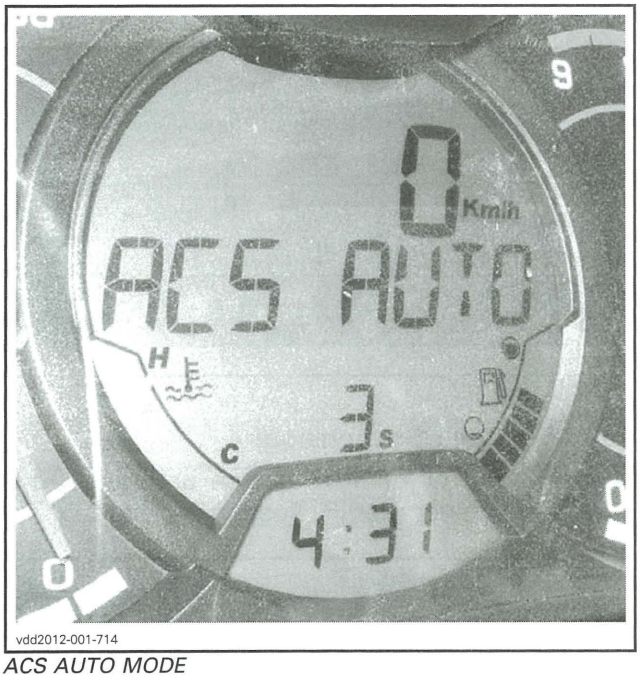

vdd2012-001-714

ACS AUTO MODE

Use ACS 1 to ACS 4 for trail riding.

Use the ACS 5 or ACS 6 settings to maximize ground clearance and increase performance while riding in the following environments:

- Muddy
- Watery
- Obstacles.

Use the ACS 6 setting is to maximize ground clearance and increase performance while carrying heavy loads:

⚠ WARNING

Always adjust the ACS suspension setting according to load, riding condition, and speed.

To Enter ACS Automatic Mode:

Press the MODE button until either ACS AUTO or ACS MAN is displayed.

Press SET button to have current ACS mode blink on screen.

Press SET button to select ACS AUTO mode.

NOTE: Selected ACS Setting from ACS1 to ACS6 displayed through gearbox position indicator.

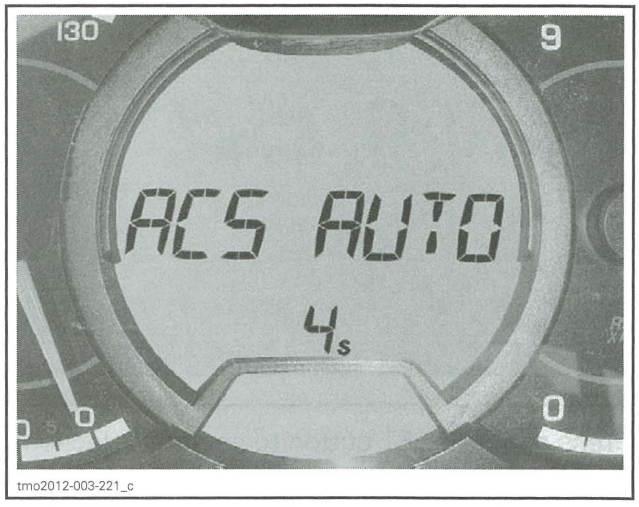

tmo2012-003-221_c

Press and hold SET button to confirm selection.

ACS MANUAL Mode

In manual mode the front and rear shock pressures can be adjusted independently. The fuel and temperature indicators will respectively become front and rear ACS pressure setting indicators.

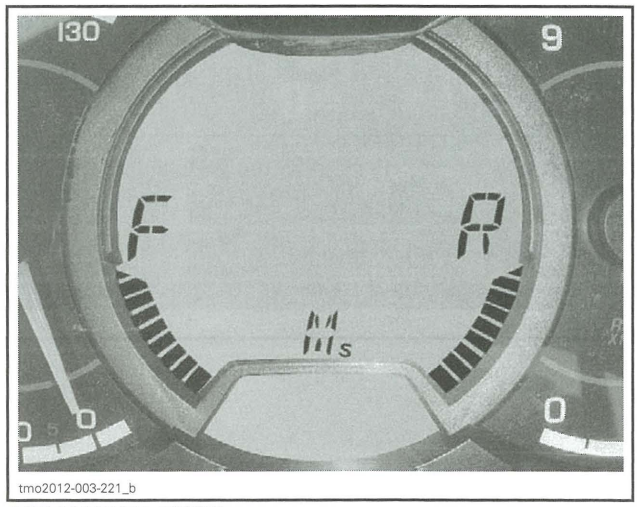

tmo2012-003-221_b

ACS MANUAL MODE

To Enter ACS Manual Mode:

Press the MODE button until either ACS AUTO or ACS MAN is displayed.

Press SET button to have current ACS mode blink on screen.

Press SET button to select ACS MAN mode.

NOTE: ACS set points and actual settings displayed through fuel, temp and gearbox position indicators.

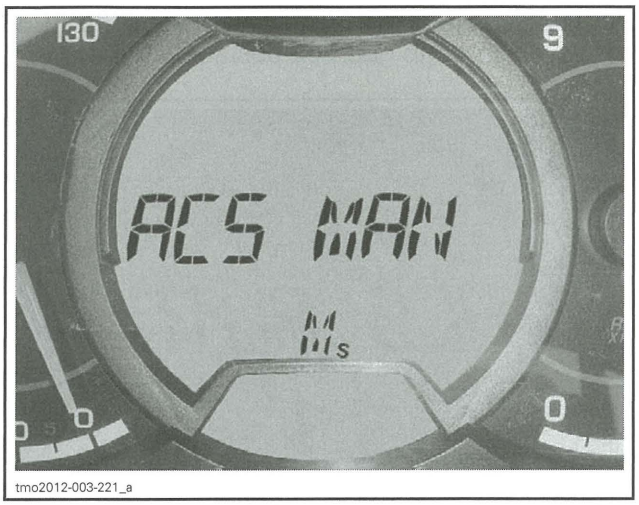

tmo2012-003-221_a

Press and hold SET button to confirm selection.

To Adjust Front Suspension:

Press on the OVERRIDE button until front (F) is blinking to select front (F) suspension setting.

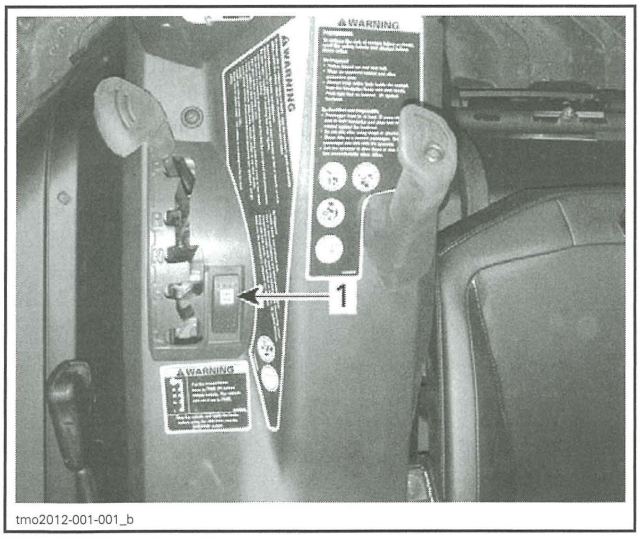

tmo2012-001-001_b

1. Override switch

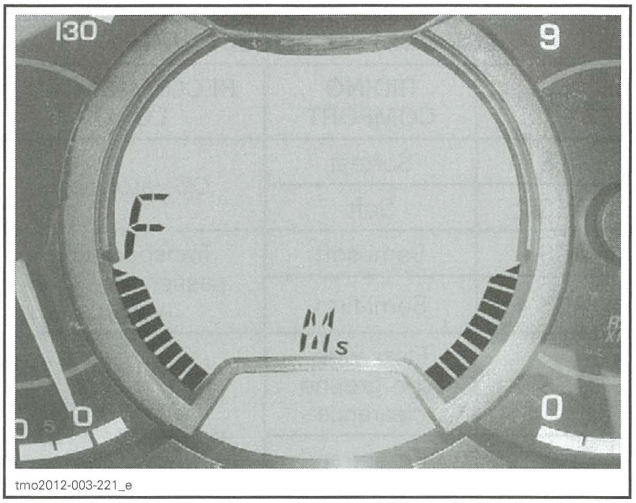

tmo2012-003-221_e

Press and hold ACS button to lower or raise the front suspension until desired setting is achieved.

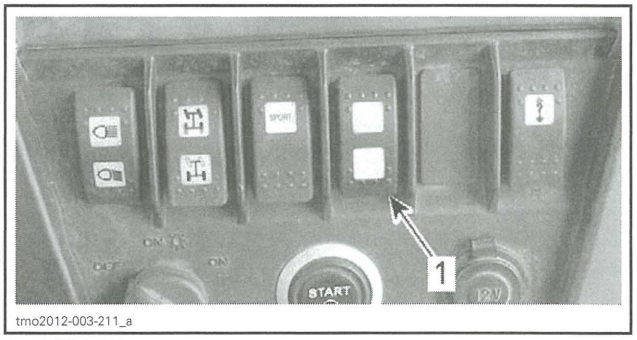

tmo2012-003-211_a

1. ACS button

To Adjust Rear Suspension:

Press on the OVERRIDE button until rear (R) is blinking to select rear (R) suspension setting.

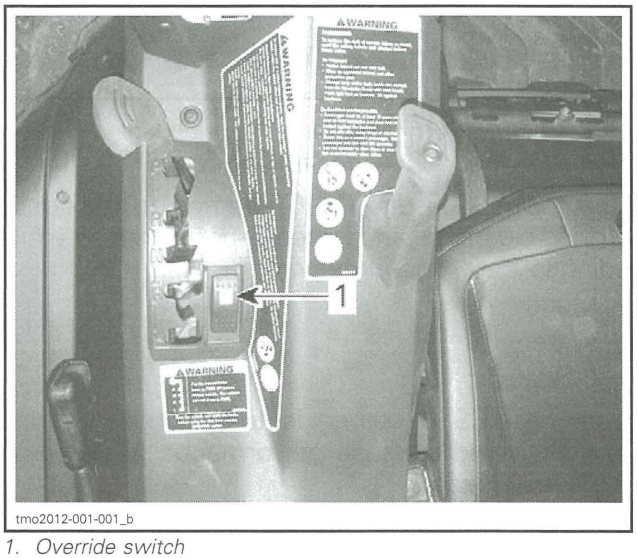

tmo2012-001-001_b

1. Override switch

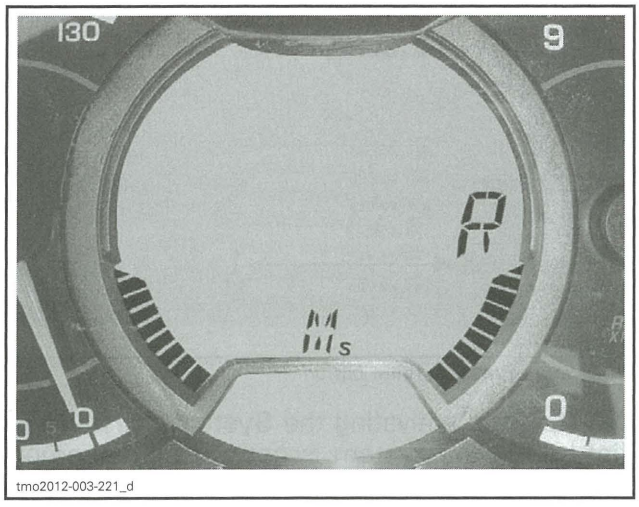

tmo2012-003-221_d

Use the ACS button to lower or raise the rear suspension.

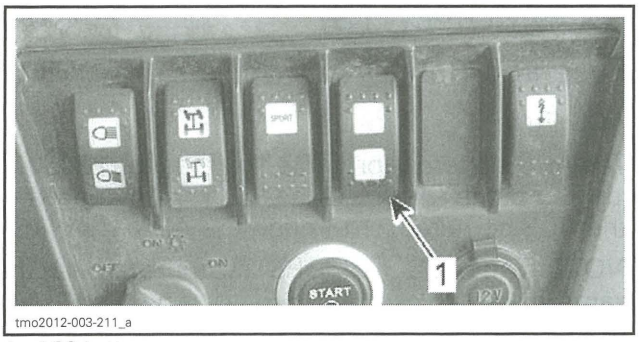

tmo2012-003-211_a

1. ACS button

NOTE: Fuel and temperature indicators will respectively become front and rear ACS setting indicators.

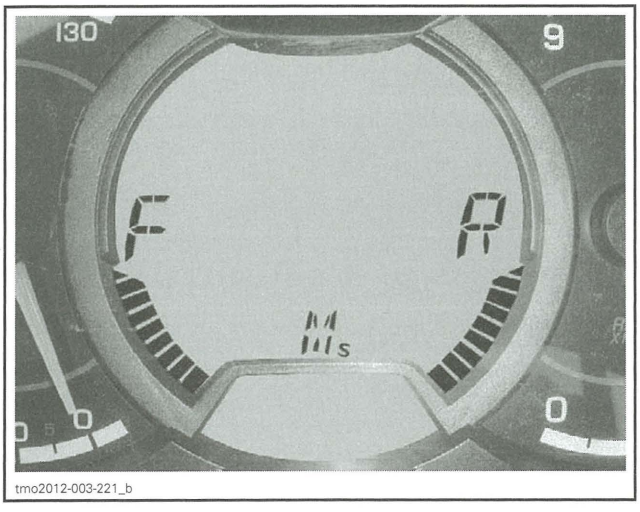

tmo2012-003-221_b

Quick Mode Selection

The last setting utilized in each mode is stored in the system. This allows for quick selections between the stored automatic mode setting and the stored manual mode setting.

To Enter Quick Mode Selection:

Press the MODE button until either ACS AUTO or ACS MAN is displayed.

Press SET button to have current ACS mode blink on screen.

Press SET button to select desired mode.

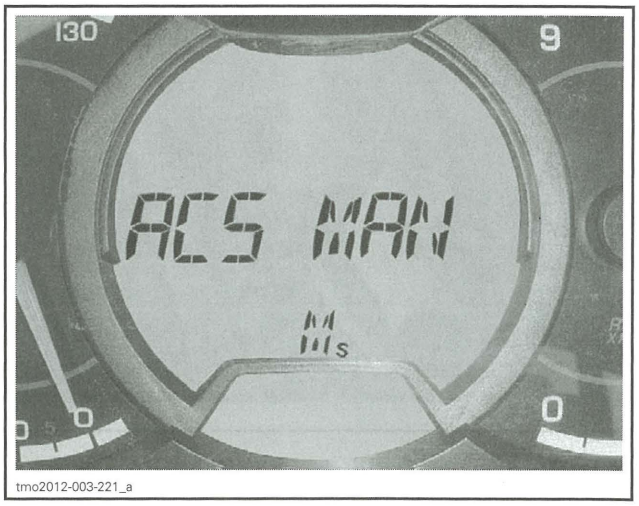

tmo2012-003-221_a

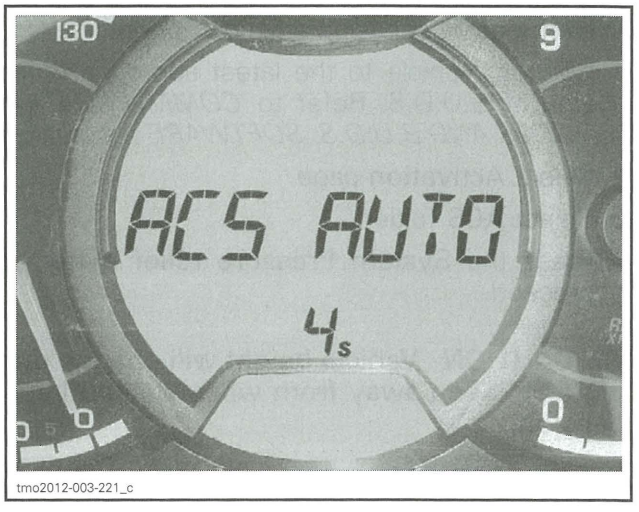

tmo2012-003-221_c

Press and hold SET button to confirm selection.

ACS system will adjust to the last settings.

SYSTEM DESCRIPTION (FEATURES)

Tire Inflation Using the ACS Compressor

The ACS compressor also comes with an auxiliary hose that can be used to inflate tires out on the trail.

The air outlet fitting is located behind the driver's seat.

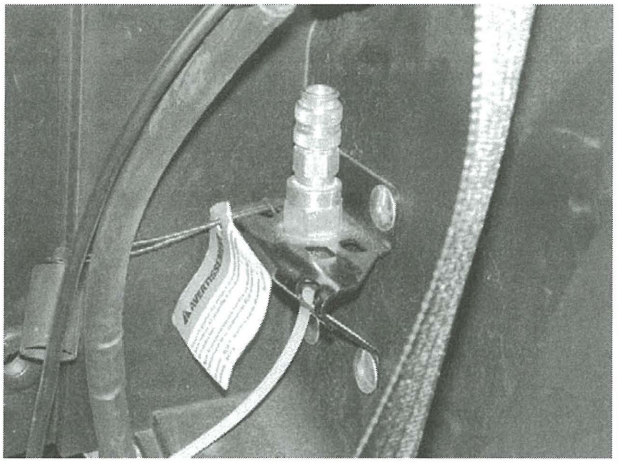

vdd2012-001-717

Air Pressure Release for Servicing

It is recommended to release air pressure in the system before servicing any components.

1. Connect vehicle to the latest appropriate version of B.U.D.S. Refer to *COMMUNICATION TOOLS AND B.U.D.S. SOFTWARE* subsection.
2. Select **Activation** page.
3. Select **ACS** folder.
4. Press the **System Pressure relief** button to proceed.

⚠ CAUTION **Vehicle height will change during test. Keep away from wheelwell and suspension.**

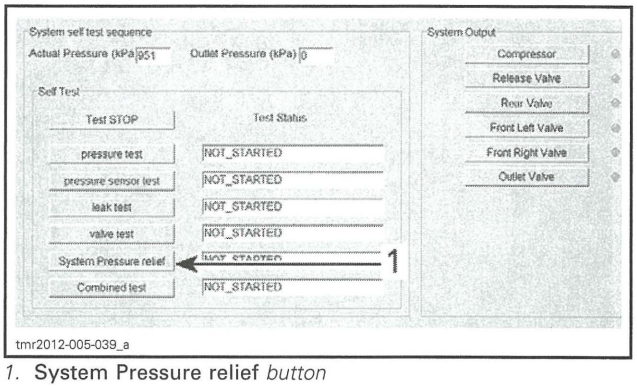

tmr2012-005-039_a

1. **System Pressure relief** *button*

NOTE: After activating the **System Pressure relief** button the system is not completely empty. The compressor setting does not allow to drop pressure under 207 kPa (30 PSI).

SYSTEM DESCRIPTION (COMPONENTS)

Fuse and Relay

ACS Fuse

The ACS system is protected by the fuse F3 (50 A) located in the fuse block no. 2. This fuse powers the ACS compressor through the ACS relay (R5).

NOTE: The ACS and DPS systems share the same fuse.

F12 powers the valve and the ACS relay.

F4 powers the electronic components.

ACS Compressor Relay (R5)

ACS compressor relay (R5) is located near ACS compressor, under driver's seat.

ACS Main Components

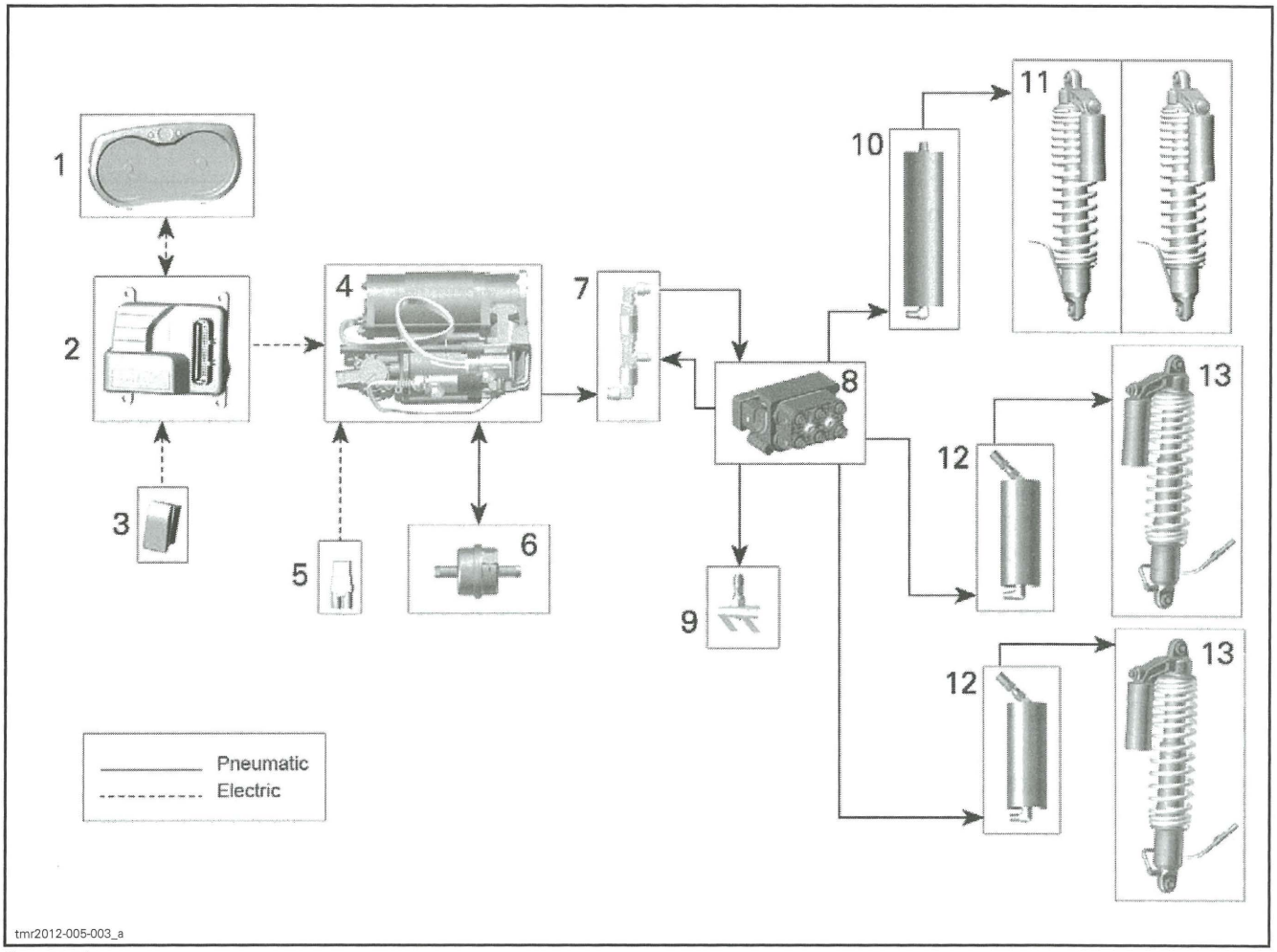

Pneumatic
Electric

1. *Multifunction gauge*
2. *Suspension control module (SCM)*
3. *ACS button*
4. *ACS compressor (including temperature sensor)*
5. *ACS relay (R5)*
6. *Air filter*
7. *Pressure distributor*
8. *ACS solenoid valve (including pressure sensor)*
9. *Outlet fitting*
10. *Rear air reservoir*
11. *Rear shock absorbers*
12. *Front air reservoirs*
13. *Front shock absorbers*

TROUBLESHOOTING

DIAGNOSTIC TIPS

Error Message Displayed in Multifunction Gauge

Two error messages can appear in the multifunction gauge and they are not necessarily related to a failure of the ACS system.

AIR FAULT

If this message appears, it indicates a disparity between the requested and the actual suspension settings. The system should react to correct this situation and the message will disappear.

If the message remains active for a long period, it may indicate one of the fuses (F3, F4 or F12) is burned or a major leak in the system. In this case, the suspension control module (SCM) will automatically shut down the compressor to prevent it from overheating. The shut down procedure of the compressor will stay active until the next restart of the vehicle (key OFF, key ON).

If there is a major leak in the system, check the system for leakage, refer to *ACS SYSTEM LEAK TEST*.

If there is no leak, the problem can be electrical or mechanical. In this case, an electrical failure of the compressor or the solenoid valve will result in the impossibility to change the actual suspension setting; a mechanical failure of the solenoid valve will create the same situation.

After multiple attempts to change suspension setting, the suspension control module (SCM) will activate error message **AIR FAULT**. Refer to *TROUBLESHOOTING GUIDELINES* for further troubleshooting procedure.

COMPRESSOR TEMPERATURE OVERHEAT

This message appears when the compressor temperature is over the calibrated value.

This situation can occur if the compressor or the solenoid valves are used during a long period of time (continually or with brief halts).

Let the compressor cool down before using it again.

TROUBLESHOOTING GUIDELINES

In AUTO Mode

GAUGE DISPLAY SETTING (S1 TO S6) CHANGED BUT SUSPENSION DOES NOT WORKED

1. Burn fuse F3 (50 A).
   - *Replace.*
2. Faulty compressor.
   - *Carry out a compressor operation test. Refer to ACS COMPRESSOR OPERATION TEST.*
3. Faulty solenoid valve.
   - *Carry out a solenoid valve operation test. Refer to ACS SOLENOID VALVE OPERATION TEST.*
4. Faulty suspension control module (SCM).
   - *Check the SCM. Refer to SUSPENSION CONTROL MODULE (SCM).*

GAUGE DISPLAY SETTING (S1 TO S6) DOES NOT CHANGED BUT SUSPENSION WORKED

1. Burned fuse.
   - *Replace.*
2. Faulty suspension control module (SCM).
   - *Check the SCM. Refer to SUSPENSION CONTROL MODULE (SCM).*
3. Faulty multifunction gauge.
   - *Check the multifunction gauge.*

GAUGE DISPLAY DOES NOT CHANGE AND SUSPENSION DOES NOT WORKED

1. Make sure engine is running.
   - *Start engine.*
2. Burn fuse F3 (50 A).
   - *Replace.*
3. Faulty suspension control module (SCM).
   - *Check the SCM. Refer to SUSPENSION CONTROL MODULE (SCM).*
4. Faulty ACS button or wiring.
   - *Check ACS button continuity.*
   - *Check ACS button control circuit.*

In Manual Mode

GAUGE DISPLAY SETTING (F OR R) DOES NOT CHANGED

1. Faulty Override button.
   - *Check the Override button.*

2. Faulty multifunction gauge.
   - *Check the multifunction gauge.*

AUTO and MANUAL Mode

SUSPENSION PRESSURE CAN BE INCREASED ONLY

1. Faulty solenoid valve.
   - *Carry out a release valve operation test. Refer to ACS RELEASE VALVE OPERATION TEST.*
2. Faulty ACS release valve.
   - *Carry out a solenoid valve operation test. Refer to ACS SOLENOID VALVE OPERATION TEST.*
3. Faulty ACS button or wiring.
   - *Check ACS button continuity. Refer to ACS BUTTON.*
   - *Check ACS button control circuit. Refer to ACS BUTTON.*
4. Faulty suspension control module (SCM).
   - *Check the SCM. Refer to SUSPENSION CONTROL MODULE (SCM).*

SUSPENSION PRESSURE CAN BE DECREASED ONLY

1. Faulty relay (R5).
   - *Check the ACS relay. Refer to ACS RELAY.*
2. Faulty compressor.
   - *Carry out a compressor operation test. Refer to ACS COMPRESSOR OPERATION TEST.*
3. Faulty solenoid valve.
   - *Carry out a solenoid valve operation test. Refer to ACS SOLENOID VALVE OPERATION TEST.*
4. Faulty ACS button or wiring.
   - *Check ACS button continuity. Refer to ACS BUTTON.*
   - *Check ACS button control circuit. Refer to ACS BUTTON.*
5. Faulty suspension control module (SCM).
   - *Check the SCM. Refer to SUSPENSION CONTROL MODULE (SCM).*

SUSPENSION PRESSURE CANNOT BE CHANGED

1. Make sure engine is running.
   - *Start engine.*
2. Burn fuse F3 (50 A).
   - *Replace.*
3. Battery voltage too low.
   - *Check battery voltage with engine running. It must be over 13 V.*
4. Faulty charging system.
   - *Check the charging system. Refer to CHARGING SYSTEM subsection.*
5. Faulty relay (R5).
   - *Check the ACS relay. Refer to ACS RELAY.*
6. Faulty compressor.
   - *Carry out a compressor operation test. Refer to ACS COMPRESSOR OPERATION TEST.*
7. Faulty solenoid valve.
   - *Carry out a solenoid valve operation test. Refer to ACS SOLENOID VALVE OPERATION TEST.*
8. Faulty ACS button or wiring.
   - *Check ACS button continuity. Refer to ACS BUTTON.*
   - *Check ACS button control circuit. Refer to ACS BUTTON.*
9. Faulty suspension control module (SCM).
   - *Check the SCM. Refer to SUSPENSION CONTROL MODULE (SCM).*

AIR OUTLET FITTING DOES NOT WORKS

1. Make sure engine is running.
   - *Start engine.*
2. Faulty solenoid valve.
   - *Carry out a solenoid valve operation test. Refer to ACS SOLENOID VALVE OPERATION TEST.*

TROUBLESHOOTING WITH B.U.D.S.

Check battery voltage before performing any B.U.D.S. test. Battery must be fully charged or use a power pack to ensure adequate power for all required tests.

ACS System Leak Test

1. Connect vehicle to the latest appropriate version of B.U.D.S. Refer to *COMMUNICATION TOOLS AND B.U.D.S. SOFTWARE* subsection.
2. Select **Activation** page.
3. Select **ACS** folder.
4. In **Self Test** region, press the **leak test** button to proceed.

⚠ CAUTION Vehicle height will change during test. Keep away from wheelwell and suspension.

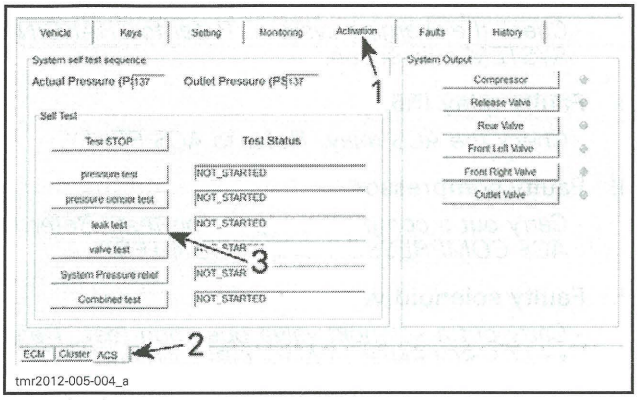

tmr2012-005-004_a

1. *Activation page*
2. *ACS folder*
3. *Leak test button*

The result will be indicated in the TEST STATUS box beside the **leak test** button.

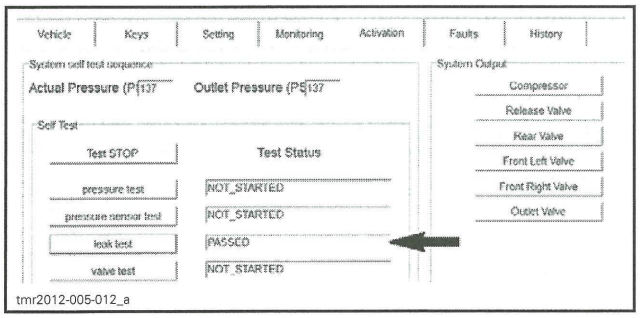

tmr2012-005-012_a

If a leak is detected, pressurize the system again and inspect hoses and fittings with soapy water to locate the faulty component.

ACS Air Pressure Monitoring

To monitor air pressure in the system during troubleshooting operation, proceed as follows:

1. Connect vehicle to the latest appropriate version of B.U.D.S. Refer to *COMMUNICATION TOOLS AND B.U.D.S. SOFTWARE* subsection.
2. Select **Monitoring** page.
3. Select **ACS** folder.

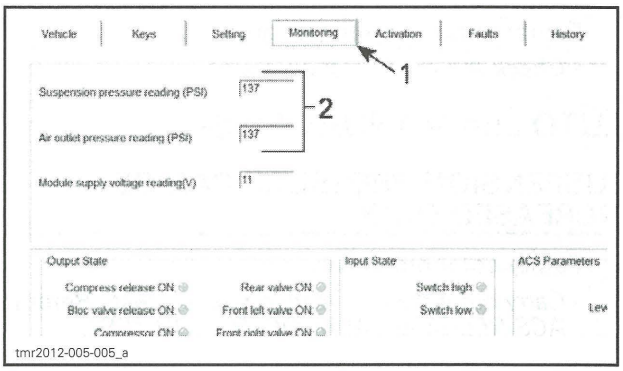

tmr2012-005-005_a

1. *Monitoring page*
2. *Suspension pressure*

PROCEDURES

PNEUMATIC HOSE

NOTICE Do not attempt to disconnect pneumatic hoses from ACS manifold or ACS exhaust compressor valve.

Pneumatic Hose Removal

Release air pressure from the ACS system. Refer to *AIR PRESSURE RELEASE FOR SERVICING* in this subsection.

Pneumatic hoses may be disconnected by pushing inwards on the air fitting ring (towards the air fitting) while pulling outwards on the hose.

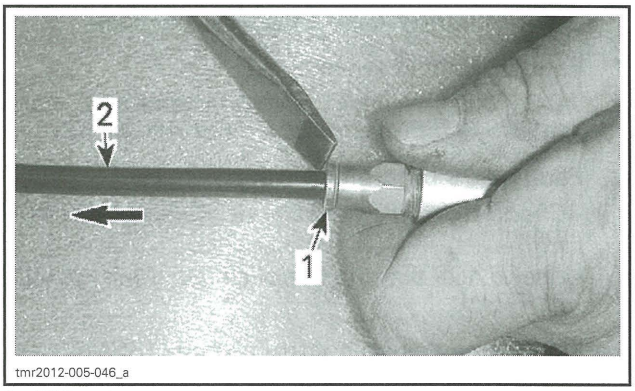

tmr2012-005-046_a

1. *Fitting ring*
2. *Pneumatic hose*

NOTE: Pull the hose slightly and wait during the release of the remaining air. When all air is released, remove pneumatic hose from its fitting.

Pneumatic hose Installation

Before installing the hose, verify the end of the pneumatic hose.

If deep nicks are found, cut a small portion of the hose end.

HOSE END LENGTH TO BE CUT
3.18 mm to 6.35 mm (1/8 in to 1/4 in)

Push the hose inwards then pull the air fitting ring outwards to reestablish a good seal and lock the hose in place.

ACS RELEASE VALVE

ACS Release Valve Access

To access to ACS release valve, remove the following:

- Driver's seat
- LH lateral console panel
- Floor panel.

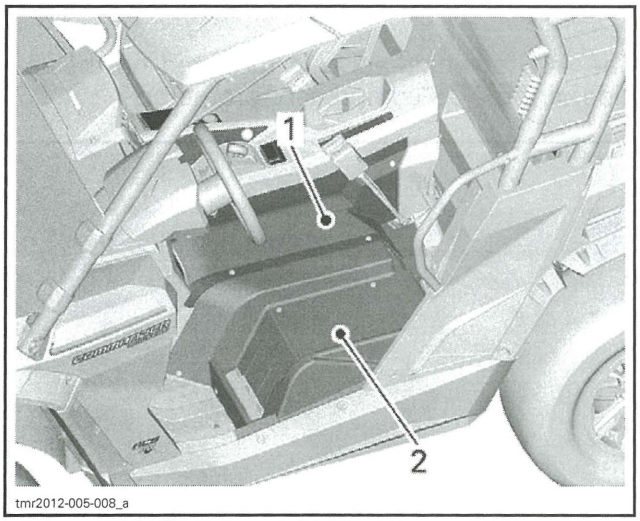

SIDE NET REMOVED FOR CLARITY
1. *LH lateral console panel*
2. *Floor panel*

The ACS release valve is a component of the ACS compressor. The release valve is located at the left of compressor.

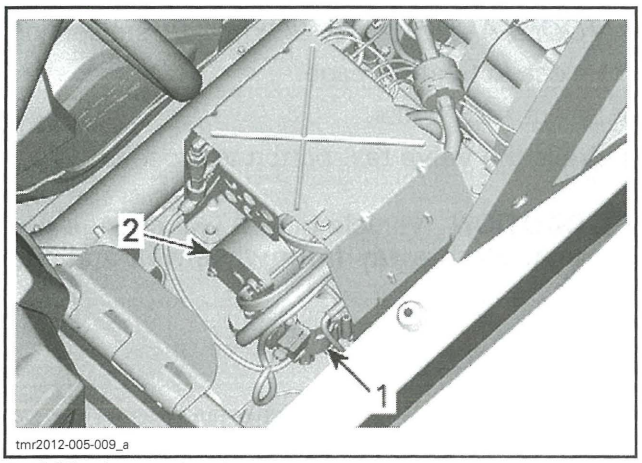

1. *ACS release valve*
2. *ACS compressor*

ACS Release Valve Operation Test

1. Connect vehicle to the latest appropriate version of B.U.D.S. Refer to *COMMUNICATION TOOLS AND B.U.D.S. SOFTWARE* subsection.
2. Select **Activation** page.
3. Select **ACS** folder.
4. Press the **Release Valve** button to proceed.

⚠ CAUTION Vehicle height will change during test. Keep away from wheelwell and suspension.

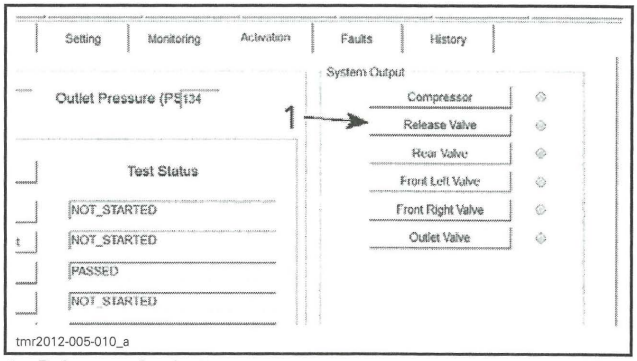

1. *Release valve button*

5. Listen for air exits from underneath dash and around valve to confirm proper operation.

ACS Release Valve Input Voltage Test

1. Unplug the ACS release valve connector.

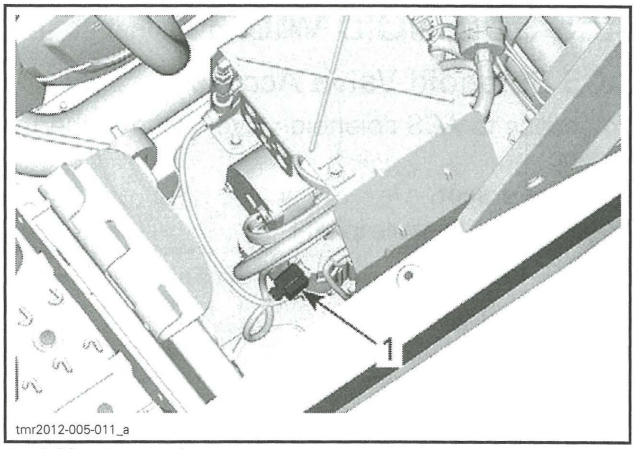

1. *ACS release valve connector*

2. Start engine.
3. Measure voltage as per the following table.

REQUIRED TOOL
FLUKE 115 MULTIMETER (P/N 529 035 868)

TEST PROBES		VOLTAGE
Pin 1 (release valve connector)	Battery negative (–) post	Battery voltage

ACS Release Valve Ground Test

1. With ACS release valve connector unplugged and engine running, measure voltage as per the following table.

REQUIRED TOOL
FLUKE 115 MULTIMETER (P/N 529 035 868)

TEST PROBES		VOLTAGE
Pin 2 (release valve connector)	Battery negative (+) post	Battery voltage

ACS Release Valve Replacement

The ACS release valve is not available separately.

Replace the ACS compressor. Refer to *ACS COMPRESSOR* for complete procedure.

ACS SOLENOID VALVE

ACS Solenoid Valve Access

To access to ACS solenoid valve, remove the following:

- Driver's seat
- LH lateral console panel
- Floor panel.

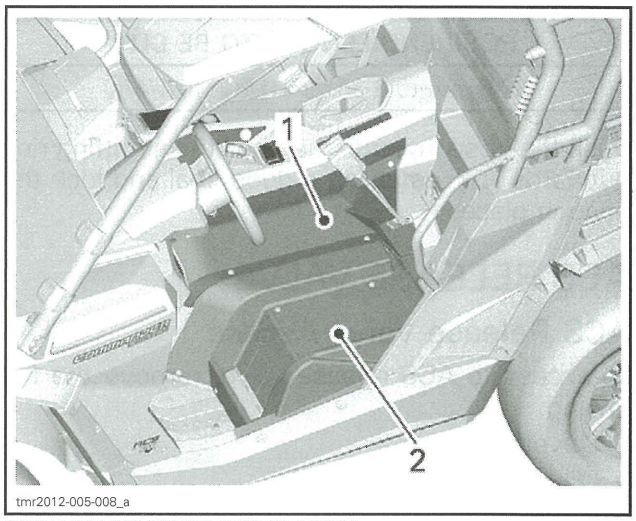

SIDE NET REMOVED FOR CLARITY
1. LH lateral console panel
2. Floor panel

The ACS solenoid valve is mounted on the rear side of the ACS compressor protector.

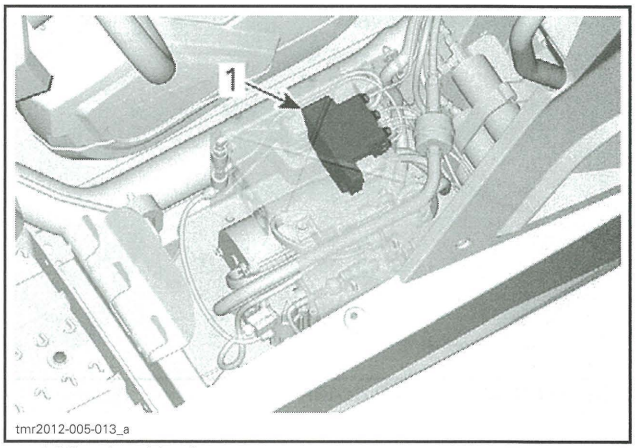

1. ACS solenoid valve

ACS Solenoid Valve Operation Test

1. Connect vehicle to the latest appropriate version of B.U.D.S. Refer to *COMMUNICATION TOOLS AND B.U.D.S. SOFTWARE* subsection.
2. Select **Activation** page.
3. Select **ACS** folder.
4. Press the **valve test** button to proceed.

⚠ CAUTION **Vehicle height will change during test. Keep away from wheelwell and suspension.**

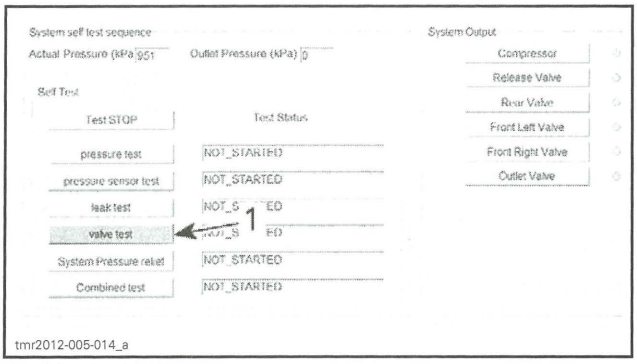

1. Valve test button

The result will be indicated in the TEST STATUS box beside the **valve test** button.

If test fails, carry out the *ACS SOLENOID VALVE INPUT VOLTAGE TEST.*

If the ACS solenoid valve passed the test, check the ACS button.

ACS Solenoid Valve Input Voltage Test

1. Unplug the ACS solenoid valve connector.

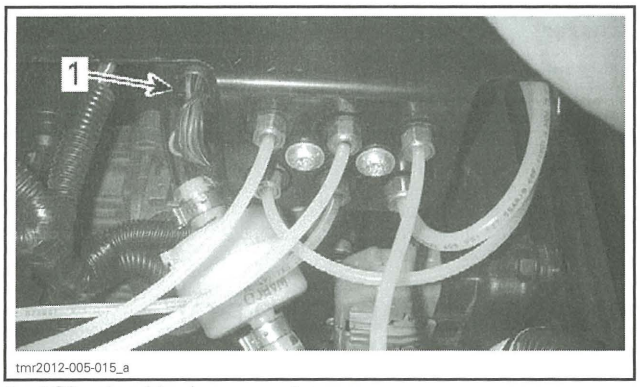

1. ACS solenoid valve connector

2. Start engine.
3. Measure voltage as per the following table.

REQUIRED TOOL
FLUKE 115 MULTIMETER (P/N 529 035 868)

TEST PROBES		VOLTAGE
Pin 5 (solenoid valve connector)	Battery negative (–) post	Battery voltage
Pin 6 (solenoid valve connector)		

If the test fails, carry out an *ACS SOLENOID VALVE POWER WIRE CONTINUITY TEST.*

If result is within specification, continue the test with the *ACS SOLENOID VALVE GROUND TEST.*

ACS Solenoid Valve Ground Test

With ACS solenoid valve connector unplugged and engine running, measure voltage as per the following table.

REQUIRED TOOL
FLUKE 115 MULTIMETER (P/N 529 035 868)

TEST PROBES		VOLTAGE
Pin 7 (solenoid valve connector)	Battery negative (+) post	Battery voltage

If the test fails, carry out an *ACS SOLENOID VALVE GROUND WIRE CONTINUITY TEST.*

If result is within specification, check the ACS button.

ACS Solenoid Valve Power Wire Continuity Test

1. Unplug the relay R5.
2. Check the continuity between ACS solenoid valve connector and relay R5 holder as per the following table.

REQUIRED TOOL
FLUKE 115 MULTIMETER (P/N 529 035 868)

TEST PROBES		RESISTANCE
Pin 5 (solenoid valve connector)	Position 85	Close to 0 Ω
Pin 6 (solenoid valve connector)		

ACS Solenoid Valve Ground Wire Continuity Test

1. Unplug the suspension control module (SCM) connector.
2. Check the continuity between ACS solenoid valve connector and SCM connector as per the following table.

REQUIRED TOOL	
FLUKE 115 MULTIMETER (P/N 529 035 868)	

TEST PROBES		RESISTANCE
Pin 7 (solenoid valve connector)	Pin 14 (SCM)	Close to 0 Ω

ACS Solenoid Valve Removal

1. Remove bolts retaining the air pressure distributor.

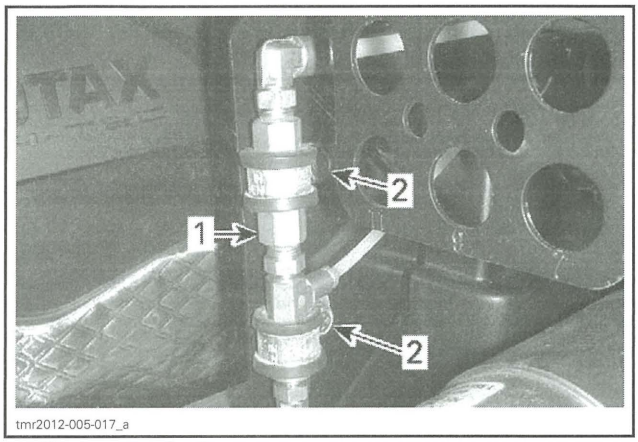

tmr2012-005-017_a

1. Air pressure distributor
2. Retaining bolts

2. Disconnect pneumatic hoses from:
   - Air outlet fitting
   - Air reservoirs
   - Pressure distributor (except the lower one).
3. Unplug ACS solenoid valve connector.
4. Remove screws securing the ACS solenoid valve to compressor protector.
5. Remove the ACS solenoid valve from the vehicle.

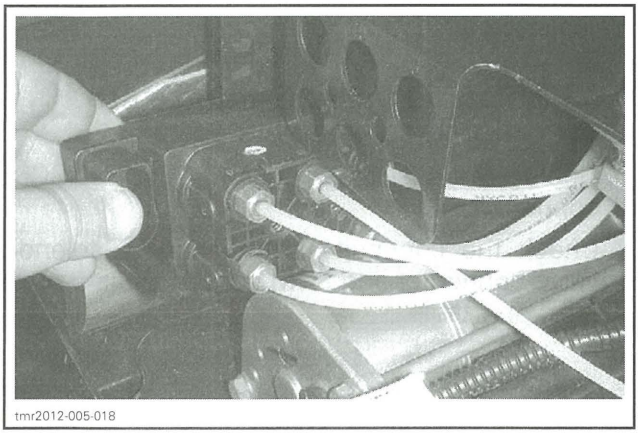
tmr2012-005-018

ACS Solenoid Valve Installation

The installation procedure is the reverse of removal procedure, however pay attention to the following.

Position the ACS solenoid valve on the compressor and route all pneumatic hoses through corresponding support holes.

Secure the ACS solenoid valve to its support.

Connect pneumatic hoses as per the following illustration.

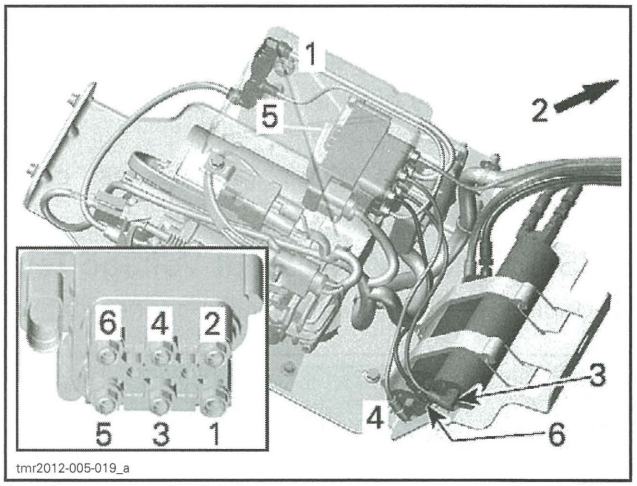

tmr2012-005-019_a

1. Air pressure distributor
2. Air outlet fitting
3. Rear air reservoir
4. Front RH air reservoir
5. Air pressure distributor
6. Front LH air reservoir

SUSPENSION CONTROL MODULE (SCM)

SCM Access

To access the SCM, remove the following:
- Driver's seat
- LH lateral console panel
- Floor panel.

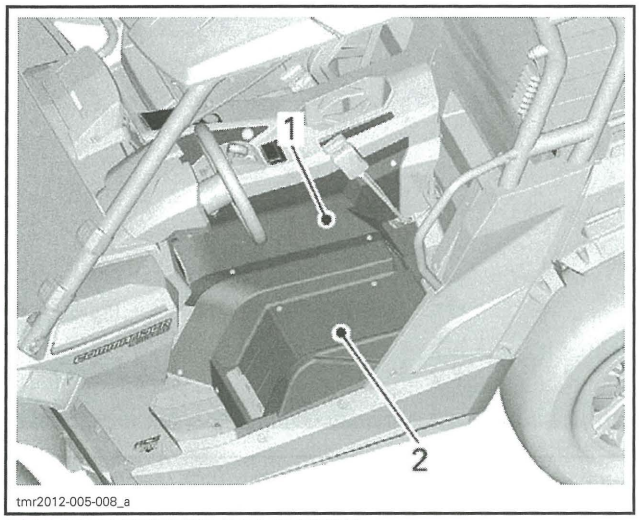

SIDE NET REMOVED FOR CLARITY
1. *LH lateral console panel*
2. *Floor panel*

The suspension control module (SCM) is mounted on the wall of the ACS compressor protector.

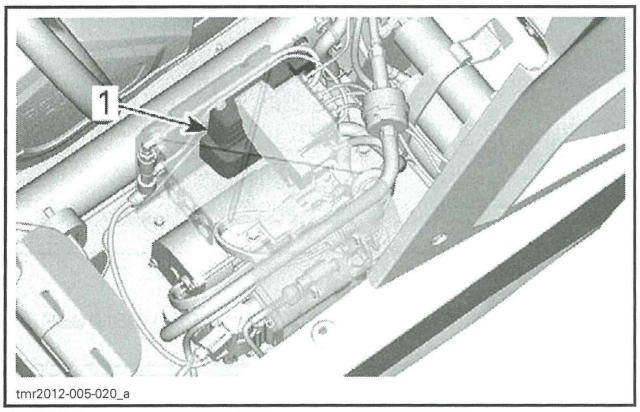

1. *SCM*

SCM Signal Circuit Continuity Test

1. Unplug multifunction gauge connector. Refer to *LIGHTS, GAUGE AND ACCESSORIES* subsection.
2. Unplug SCM connector.

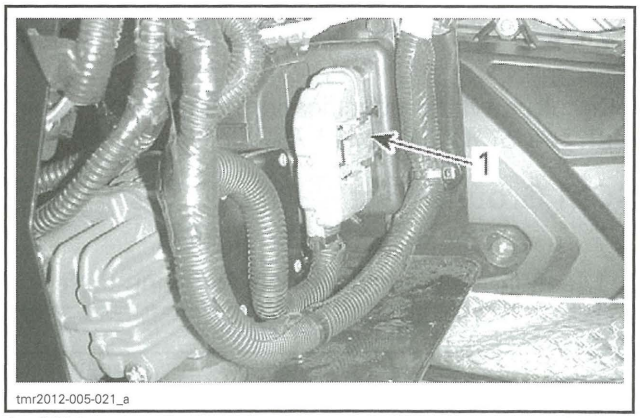

1. *SCM connector*

3. Measure resistance as per the following tables.

REQUIRED TOOL
FLUKE 115 MULTIMETER (P/N 529 035 868)

SCM CONNECTOR	GAUGE CONNECTOR	RESISTANCE
Pin 1	Pin 19	Close to 0 Ω
Pin 2	Pin 18	

If the test fails, repair or replace wires and connectors.

If result is within specification, continue the test with the *SCM INPUT VOLTAGE TEST.*

SCM Input Voltage Test

1. Turn ignition switch to ON position.
2. Measure voltage as per the following table.

REQUIRED TOOL
FLUKE 115 MULTIMETER (P/N 529 035 868)

TEST PROBES		VOLTAGE
Pin 17 (SCM connector)	Battery negative (–) post	Battery voltage
Pin 18 (SCM connector)		
Pin 35 (SCM connector)		
Pin 36 (SCM connector)		

If the test fails, repair or replace wires and connectors.

If result is within specification, continue the test with the *SCM GROUND TEST*.

SCM Ground Test

1. Turn ignition switch to ON position.
2. Measure voltage as per the following table.

REQUIRED TOOL	
FLUKE 115 MULTIMETER (P/N 529 035 868)	

TEST PROBES		VOLTAGE
Pin 31 (SCM connector)	Battery positive (+) post	Battery voltage
Pin 32 (SCM connector)		
Pin 33 (SCM connector)		

SCM Removal

1. Remove screws retaining the air reservoir support and the compressor support.

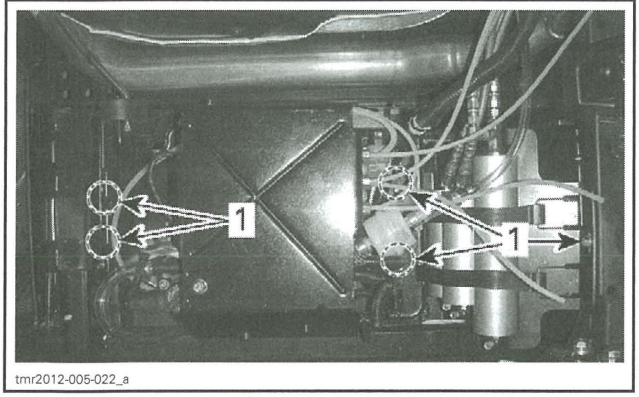

tmr2012-005-022_a

1. Screws to be removed

2. Disconnect pneumatic hoses from air reservoirs and air outlet fitting.
3. Place the air reservoir support aside to make room.

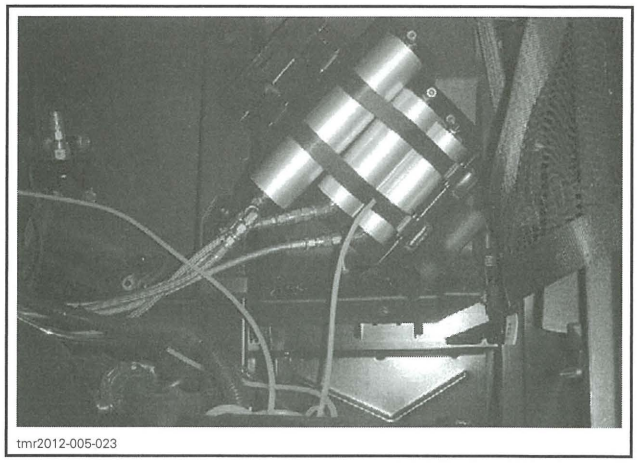
tmr2012-005-023

4. Unplug the SCM connector.

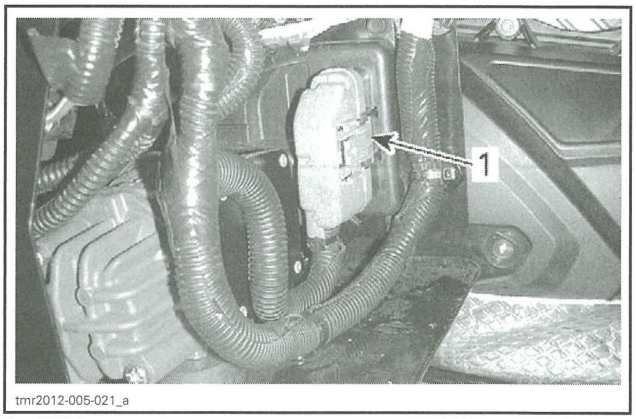

tmr2012-005-021_a

1. SCM connector

5. Cut locking ties securing the wiring harness.

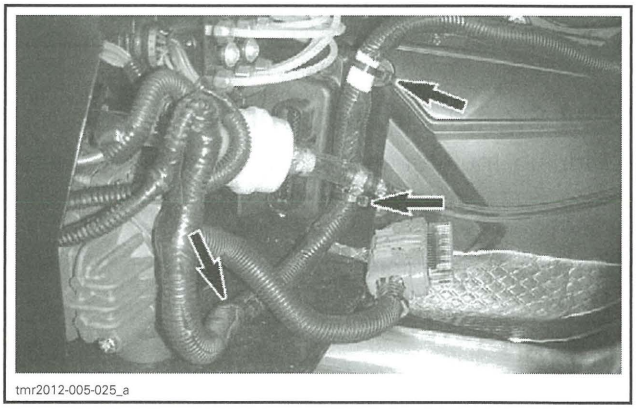
tmr2012-005-025_a

6. Using a small screwdriver, detach both connector housings from the compressor protector wall.

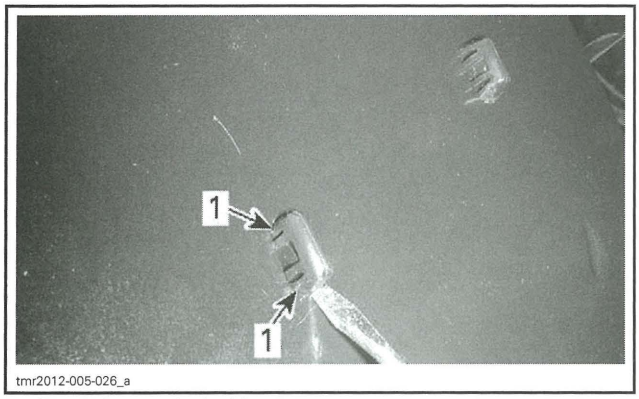

1. Press these tabs inside

7. Unplug the following connectors:
   - Compressor connector
   - Release valve connector
   - Pressure sensor connector.

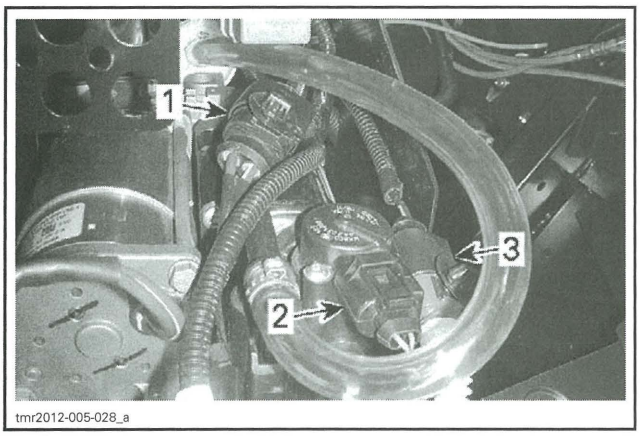

1. Compressor connector
2. Release valve connector
3. Pressure sensor connector.

8. Disconnect the lower pneumatic hose from the pressure distributor.

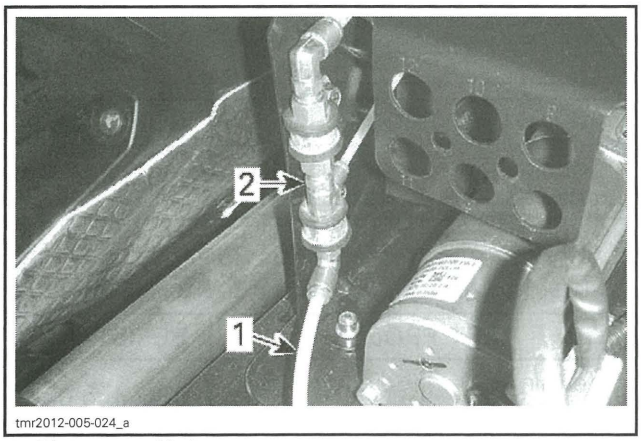

1. Disconnect this hose
2. Pressure distributor

9. Turn the compressor support on the side to remove screws retaining the compressor protector.

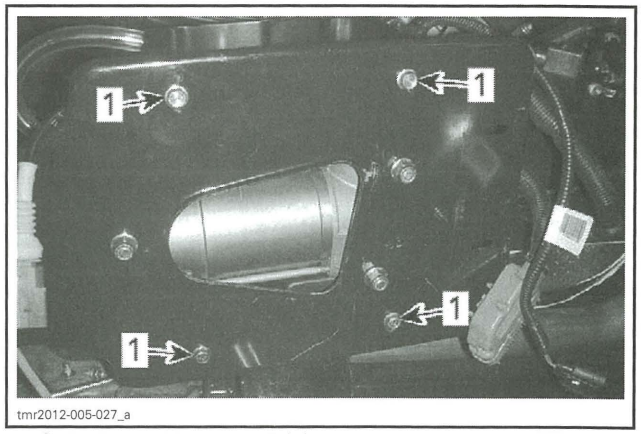

1. Compressor protector retaining screws

10. Separate compressor protector from the compressor support.
11. Remove screws securing the SCM on the wall of the compressor protector.

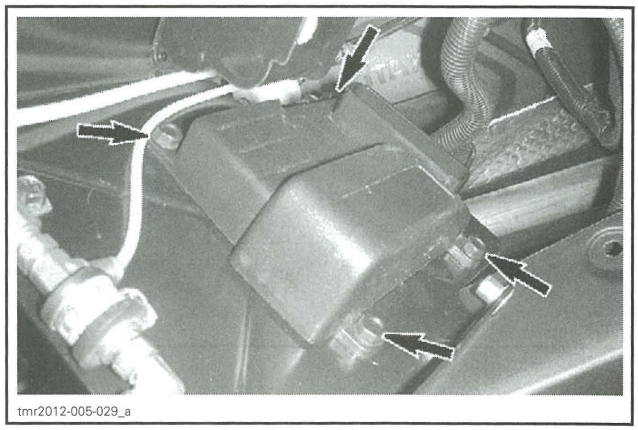

SCM Installation

The installation procedure is the reverse of removal procedure.

ACS RELAY (R5)

ACS Relay (R5) Access

To access to ACS relay, remove the following:
- Driver's seat
- LH lateral console panel
- Floor panel.

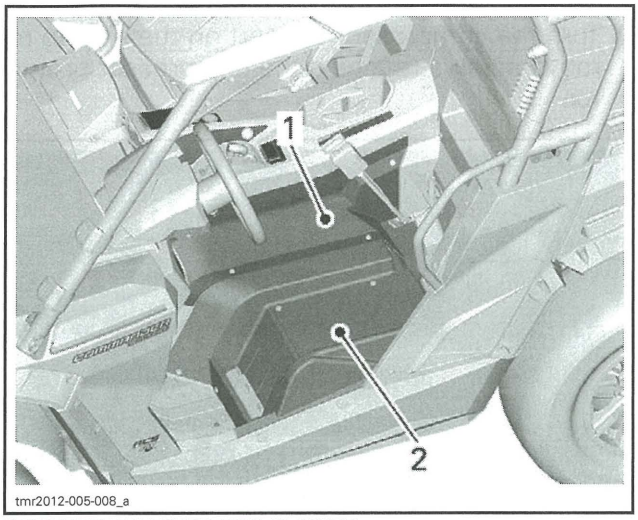

SIDE NET REMOVED FOR CLARITY
1. *LH lateral console panel*
2. *Floor panel*

The ACS relay is mounted under the top of the ACS compressor protector.

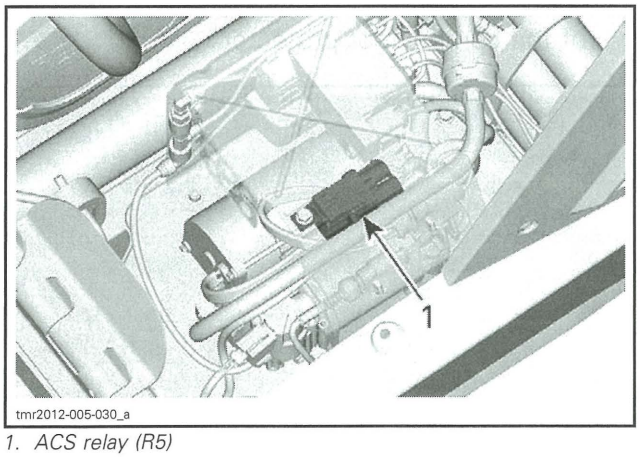

1. *ACS relay (R5)*

ACS Relay Continuity Test

1. Remove relay (R5).
   1.1 Remove bolt and nut retaining the relay holder on the top of the compressor protector.

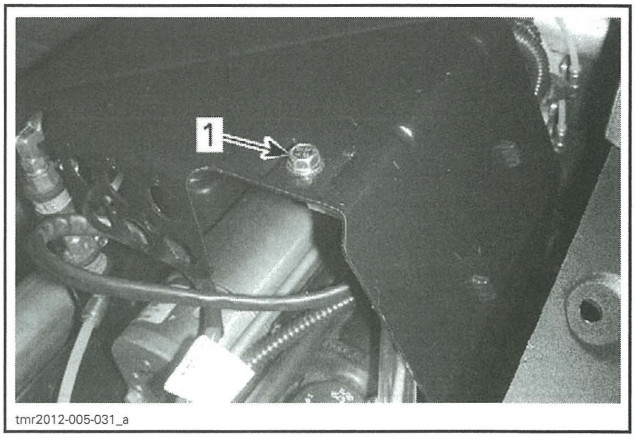

1. *Relay retaining bolt*

   1.2 From the rear, pull relay out from underneath of compressor protector.
   1.3 Remove the relay from its holder.

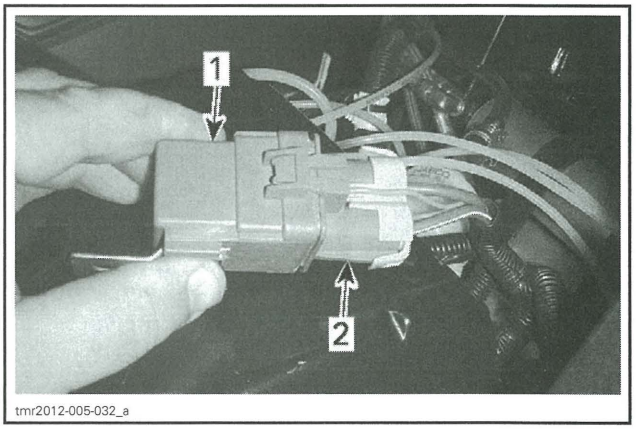

1. *Relay*
2. *Relay holder*

2. Measure resistance as per the following table.

REQUIRED TOOL	
FLUKE 115 MULTIMETER (P/N 529 035 868)	

TEST PROBES		RESISTANCE
Terminal 30 (relay holder)	Terminal 87 (relay holder)	Open (OL)

3. Apply 12 volts on terminals 86 and 85 and measure resistance again as per the following table.

TEST PROBES		RESISTANCE
Terminal 30 (relay holder)	Terminal 87 (relay holder)	Close to 0 Ω

If results are not as per the above tables, replace relay.

ACS Relay Input Voltage Test

1. Measure voltage as per the following table.

REQUIRED TOOL
FLUKE 115 MULTIMETER (P/N 529 035 868)

TEST PROBES		VOLTAGE
Pin 87 (relay holder)	Battery negative (–) post	Battery voltage

If voltage is not as specified, check wiring, connector and terminal condition.

ACS Relay Ground Wire Continuity Test

1. Unplug suspension control module (SCM) connector.

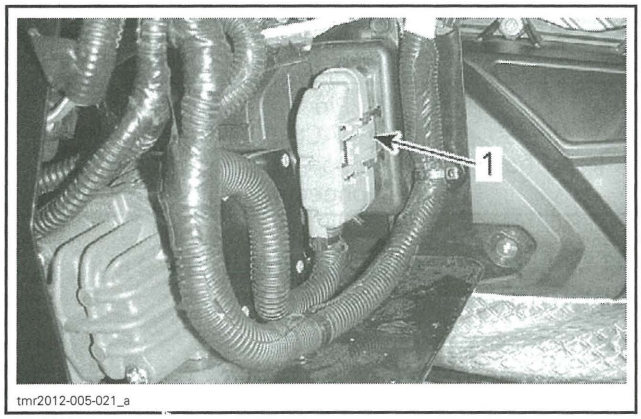

1. SCM connector

2. Measure resistance as per the following table.

REQUIRED TOOL
FLUKE 115 MULTIMETER (P/N 529 035 868)

TEST PROBES		RESISTANCE
Pin 86 (relay holder)	Pin 28 (SCM connector)	Close to 0 Ω

ACS COMPRESSOR

ACS Compressor Access

To access to ACS compressor, remove the following:

– Driver's seat
– LH lateral console panel
– Floor panel.

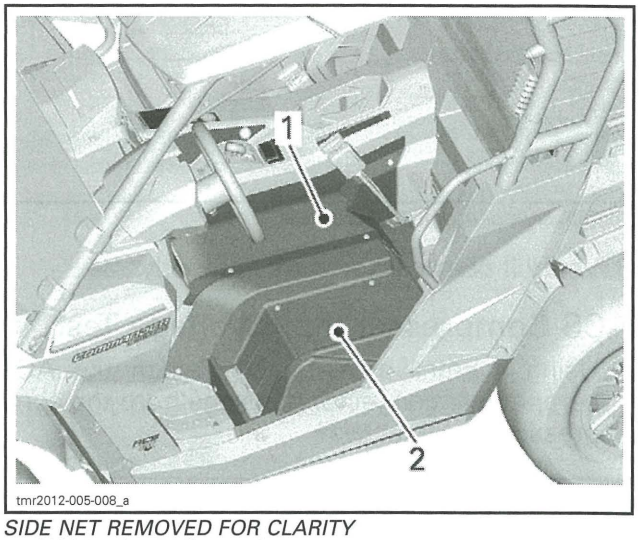

SIDE NET REMOVED FOR CLARITY
1. LH lateral console panel
2. Floor panel

The ACS compressor is mounted on the ACS compressor support.

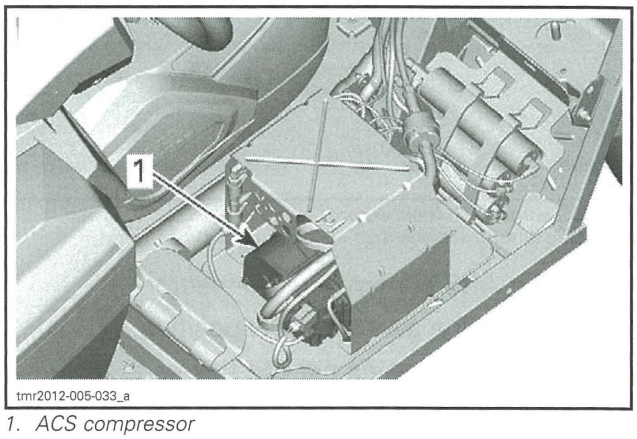

1. ACS compressor

ACS Compressor Operation Test

1. Connect vehicle to the latest appropriate version of B.U.D.S. Refer to *COMMUNICATION TOOLS AND B.U.D.S. SOFTWARE* subsection.
2. Select **Activation** page.
3. Select **ACS** folder.
4. Press **Compressor** button to proceed.

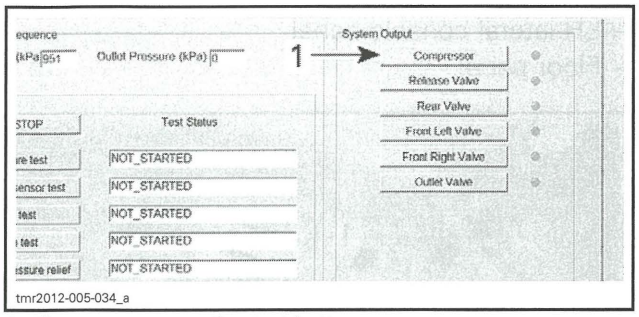

1. Compressor operation test button

5. Verify if compressor works properly.

ACS Compressor Input Voltage Test

1. Using a small screwdriver, detach the ACS compressor connector housings from the compressor protector wall.

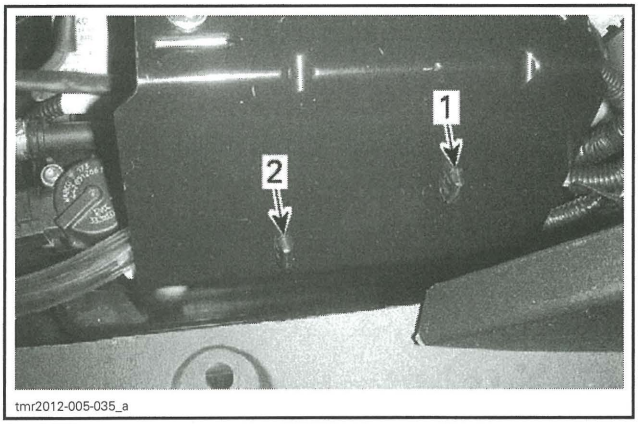

1. ACS compressor connector
2. ACS compressor pressure sensor

2. Unplug ACS compressor connector.
3. Place ignition switch to ON position.
4. Measure voltage as per the following table.

REQUIRED TOOL
FLUKE 115 MULTIMETER (P/N 529 035 868)

TEST PROBES		VOLTAGE
Pin 1 (ACS compressor connector)	Battery negative (–) post	Battery voltage

ACS Compressor Ground Test

1. Place ignition switch to ON position.
2. Measure voltage as per the following table.

REQUIRED TOOL
FLUKE 115 MULTIMETER (P/N 529 035 868)

TEST PROBES		VOLTAGE
Pin 2 (ACS compressor connector)	Battery positive (+) post	Battery voltage

ACS Compressor Power Wire Continuity Test (from Relay)

1. Remove relay (R5).
2. Measure resistance as per the following table.

REQUIRED TOOL
FLUKE 115 MULTIMETER (P/N 529 035 868)

TEST PROBES		RESISTANCE
Pin 30 (relay holder)	Pin 1 (ACS compressor connector)	Close to 1 Ω

ACS Compressor Ground Wire Continuity Test

1. Reconnect the relay (R5).
2. Check the continuity as per the following table.

REQUIRED TOOL
FLUKE 115 MULTIMETER (P/N 529 035 868)

TEST PROBES		RESISTANCE
Pin 2 (ACS compressor connector)	Battery negative (–) post	Close to 1 Ω

ACS Compressor Removal

1. Remove screws retaining the air reservoir support and the compressor support.

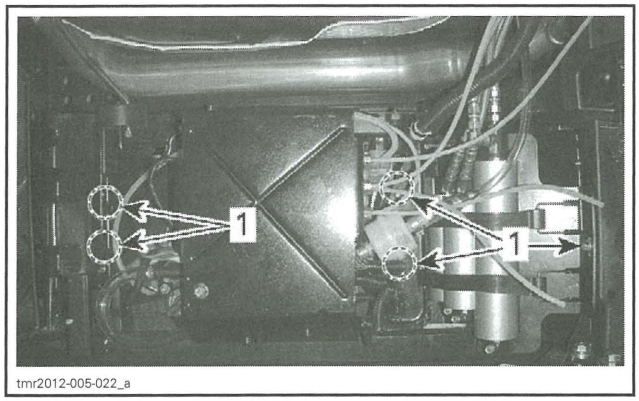

tmr2012-005-022_a

1. Screws to be removed

2. Disconnect pneumatic hoses from air reservoirs and air outlet fitting.
3. Place the air reservoir support aside to make room.

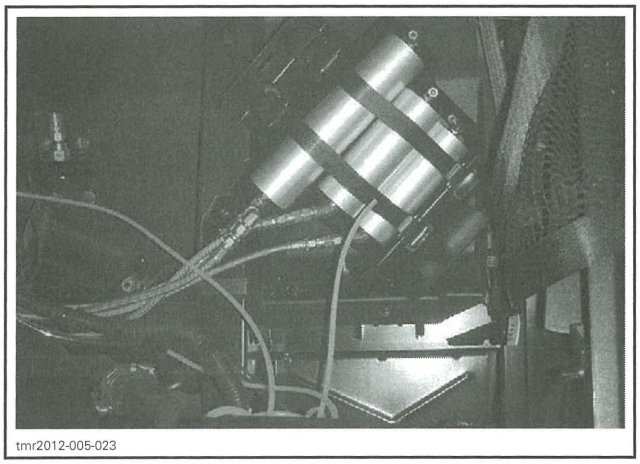
tmr2012-005-023

4. Using a small screwdriver, detach both connector housings from the compressor protector wall.

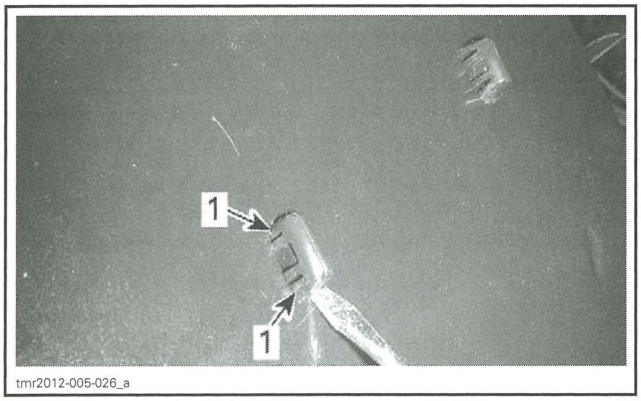

tmr2012-005-026_a

1. Press these tabs inside

5. Unplug the following connectors:
   - Compressor connector
   - Release valve connector
   - Pressure sensor connector.

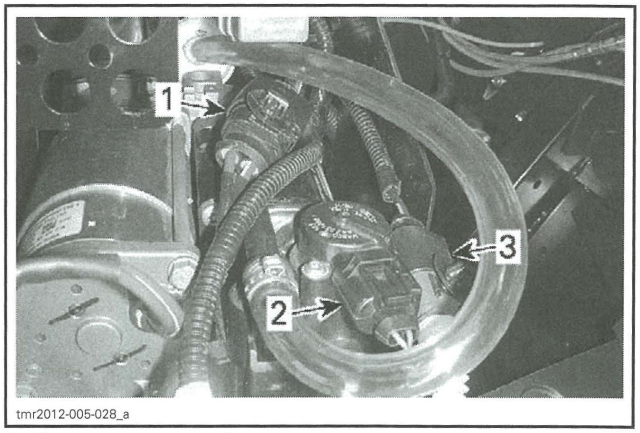

tmr2012-005-028_a

1. Compressor connector
2. Release valve connector
3. Pressure sensor connector.

6. Detach the filter hose from the compressor intake/outlet fitting.

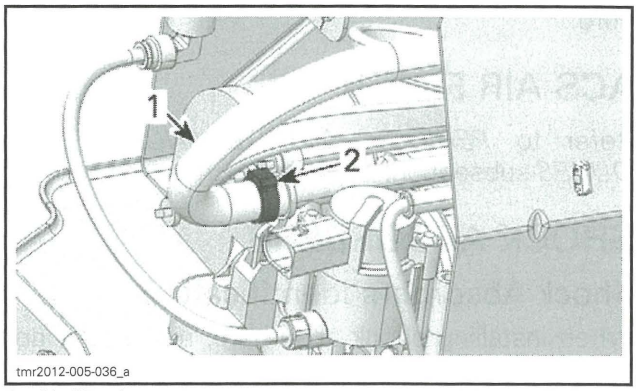

tmr2012-005-036_a

1. Air filter hose
2. Clamp to be removed

7. Disconnect the lower pneumatic hose from the pressure distributor.

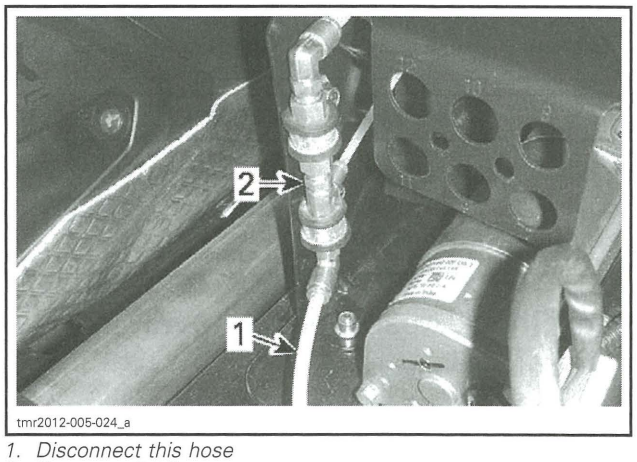

tmr2012-005-024_a

1. Disconnect this hose
2. Pressure distributor

8. Turn the compressor support on the side to remove screws retaining the compressor.

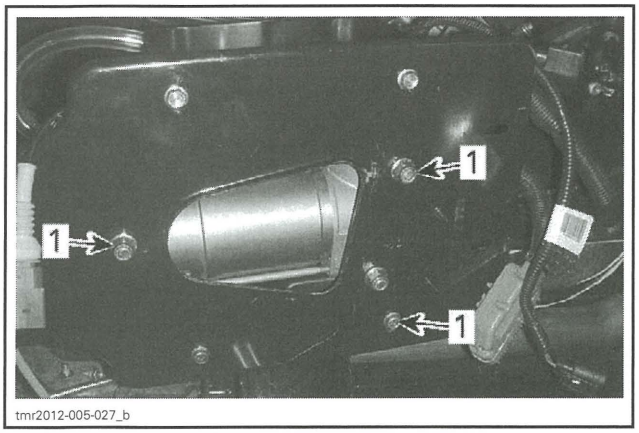

1. Compressor retaining screws

9. Remove the ACS compressor.

ACS Compressor Installation

The installation is the reverse of removal procedure.

ACS AIR FILTER

Refer to *PERIODIC MAINTENANCE PROCEDURES* subsection.

SHOCK ABSORBERS

Shock Absorbers Identification

When installing shock absorbers, make sure not to mix front and rear shock absorbers.

Front and rear shock absorbers can be easily identified by comparing the length of air hoses.

FRONT SHOCK ABSORBER	
Shock absorber with a short air hose on reservoir side	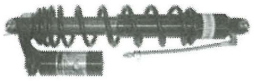

REAR SHOCK ABSORBER	
Shock absorber with a long air hose on the opposite side of reservoir	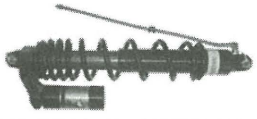

Rear Shock Absorber Removal

1. Block front wheels.
2. Loosen wheel lug nuts.
3. Open cargo box.
4. Place the jack under the hitch and lift the rear of vehicle.
5. Install jack stands to support the vehicle.
6. Remove wheel.
7. Disconnect shock absorber hose from vehicle air supply hose.

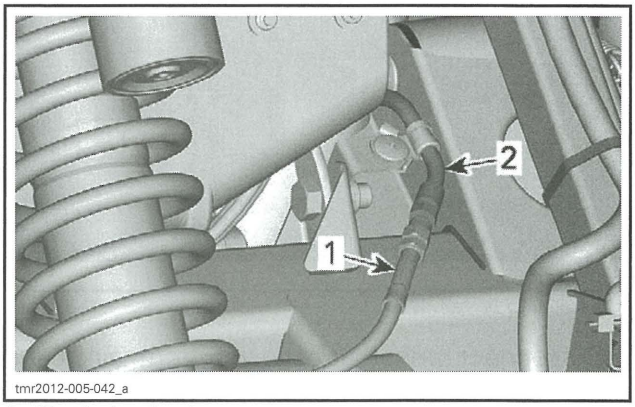

1. Shock absorber hose
2. Vehicle air supply hose

8. Drill the rivet securing the shock absorber hose to trailing arm.

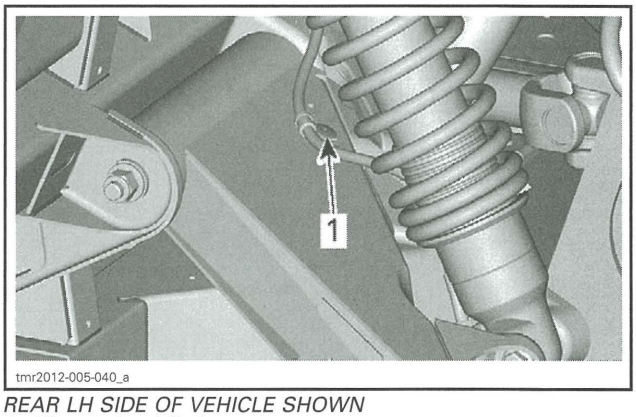

REAR LH SIDE OF VEHICLE SHOWN
1. Rivet to be drilled

9. Remove upper and lower bolts retaining the shock absorber. Discard nuts.

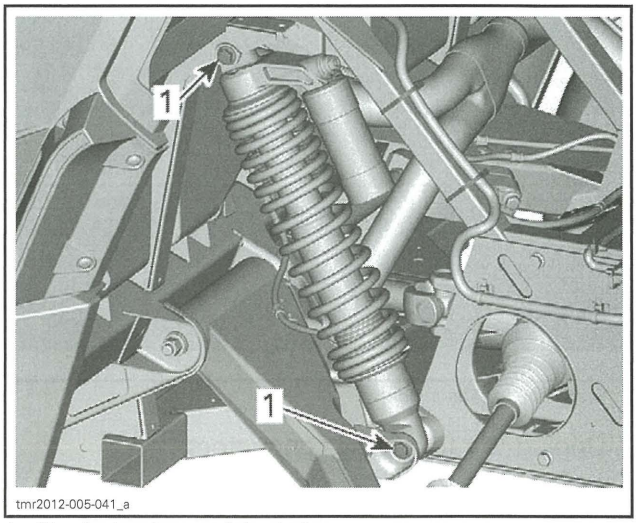

1. Shock absorber retaining bolts

Rear Shock Absorber Installation

Install shock absorbers with the reservoir rearwards.

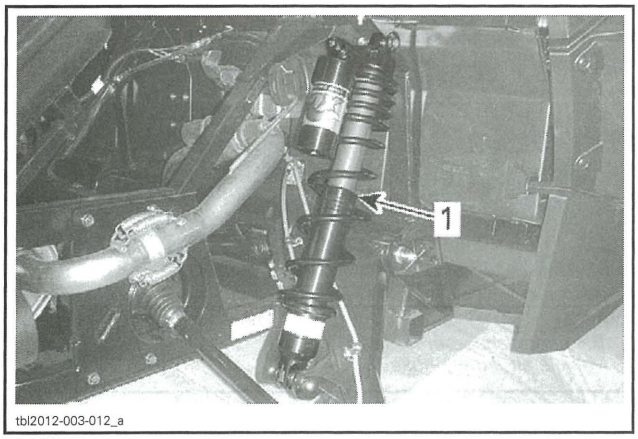

TYPICAL
1. *RH rear shock absorber*

Secure with new nuts.

TIGHTENING TORQUE	
Shock absorber nuts	48 N•m (35 lbf•ft)

Connect shock absorber hoses to vehicle air supply hoses.

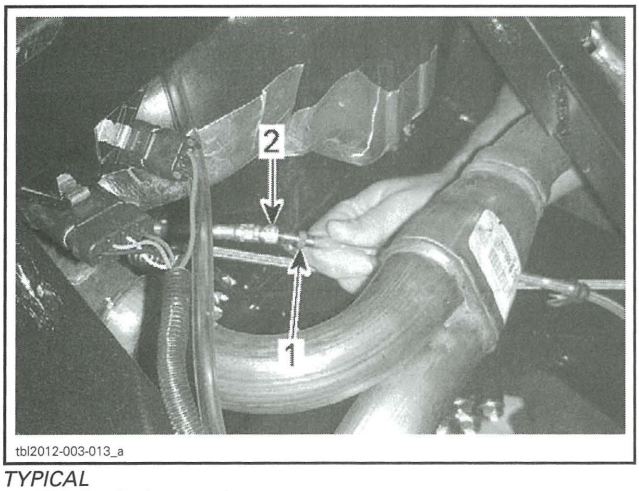

TYPICAL
1. *RH shock absorber hose*
2. *Vehicle air supply hose*

TIGHTENING TORQUE	
Air supply hose	6 N•m ± 0.5 N•m (53 lbf•**in** ± 4 lbf•**in**)

Secure shock absorber hoses to trailing arms. Ensure to position hose clamp between YELLOW dots.

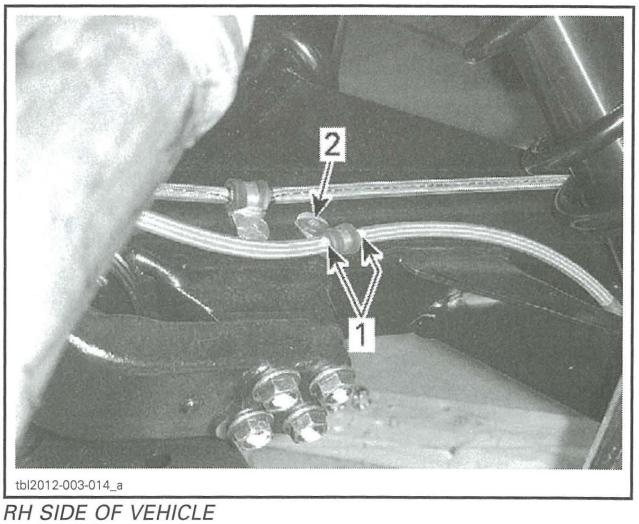

RH SIDE OF VEHICLE
1. *YELLOW dots*
2. *Rivet*

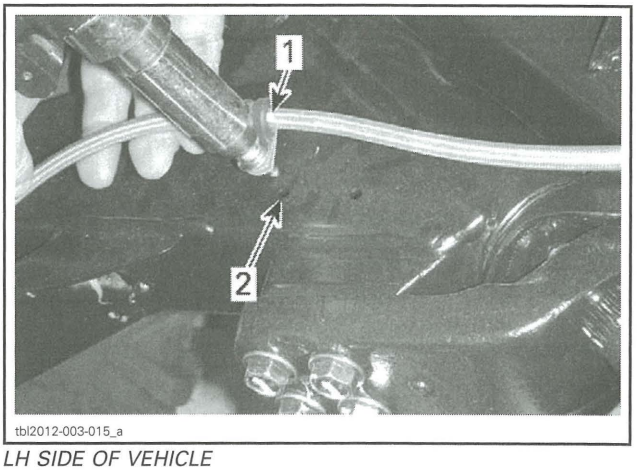

LH SIDE OF VEHICLE
1. *YELLOW dot*
2. *Install the rivet in this hole*

Front Shock Absorber Removal

1. Block rear wheels.
2. Loosen wheel lug nuts.
3. Lift the front of vehicle and support it securely.
   - 3.1 Insert the jack under the vehicle by the side, behind front wheels.
   - 3.2 Place the jack under the central beam.
   - 3.3 Lift the front of vehicle.
4. Remove front wheels.
5. Cut locking ties securing shock absorber hose to suspension arm.
6. Disconnect shock absorber hose from vehicle air supply hose.

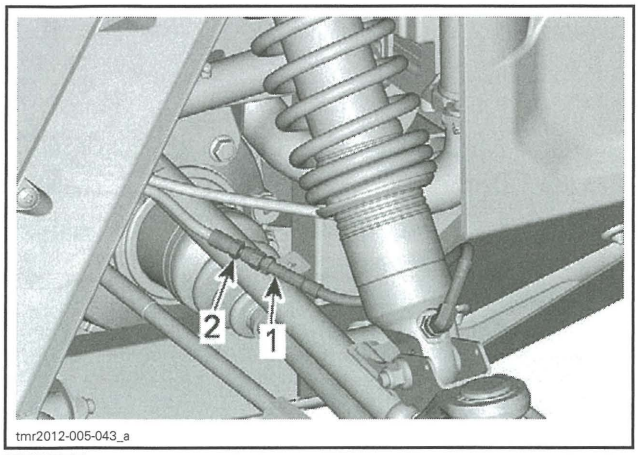

TYPICAL
1. *RH shock absorber hose*
2. *Vehicle air supply hose*

7. Remove upper and lower bolts retaining the shock absorber. Discard nuts.

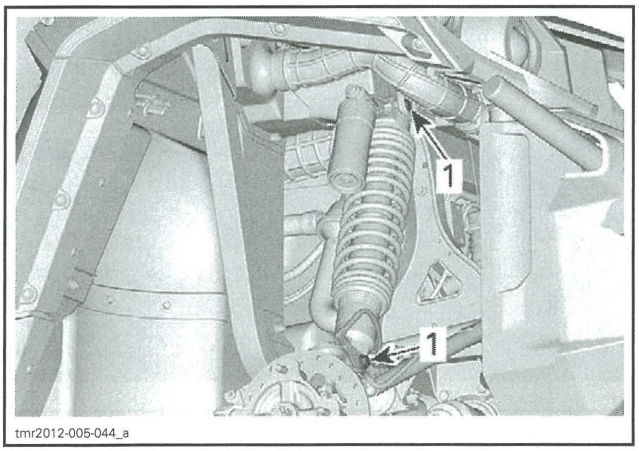

1. *Shock absorber retaining bolts*

8. Remove shock absorber from vehicle.

Front Shock Absorber Installation

Install shock absorbers with the reservoir outwards.

Secure it using previously removed bolts and new nuts. Tighten nuts to specification.

TIGHTENING TORQUE	
Shock absorber nuts	48 N•m (35 lbf•ft)

Route the hose in front of the shock absorber.

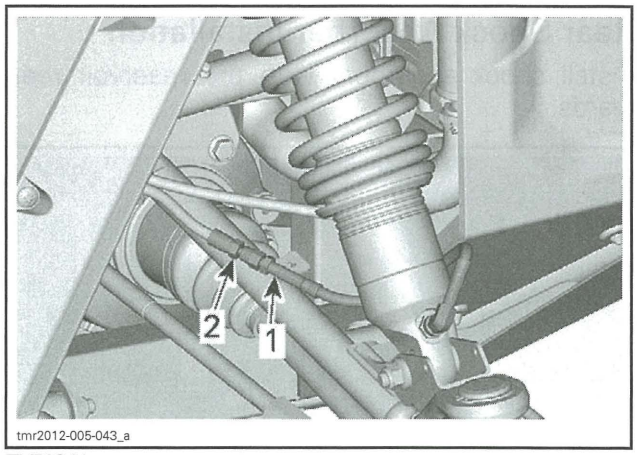

TYPICAL
1. *RH shock absorber hose*
2. *Vehicle air supply hose*

TIGHTENING TORQUE	
Air supply hose	6 N•m ± 0.5 N•m (53 lbf•**in** ± 4 lbf•**in**)

Secure the shock absorber hose to brake hose. Install a locking tie each side of the brake hose retaining clamp.

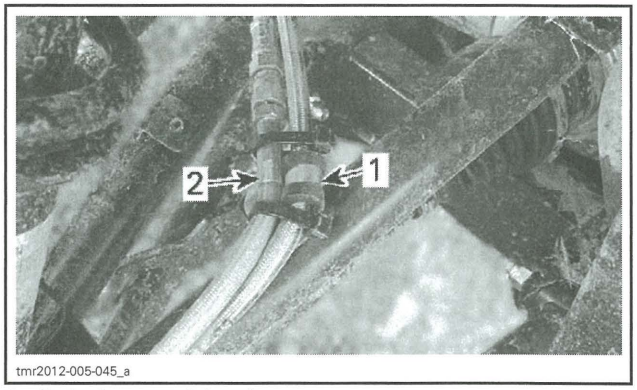

1. *Brake hose retaining clamp*
2. *Shock absorber hose*

BRAKES

SERVICE TOOLS

Description	Part Number	Page
ECM ADAPTER TOOL	529 036 166	416

SERVICE PRODUCTS

Description	Part Number	Page
COSMO RUBBER GREASE	293 550 055	418
LOCTITE 243 (BLUE)	293 800 060	419
XPS BRAKES AND PARTS CLEANER	219 701 705	419

G1	Brake Caliper Synthetic Grease
G2	Cosmo Rubber Grease
G3	XPS Synthetic Grease

T1	5.0 ± 1 N•m (44 ± 9 lbf•**in**)
T2	5.5 ± 1.5 N•m (49 ± 13 lbf•**in**)
T3	11 ± 1 N•m (97 ± 9 lbf•**in**)
T4	28.5 ± 1.5 N•m (21 ± 1 lbf•ft)
T5	25 ± 5 N•m (18 ± 4 lbf•ft)
T6	48 ± 6 N•m (35 ± 4 lbf•ft)

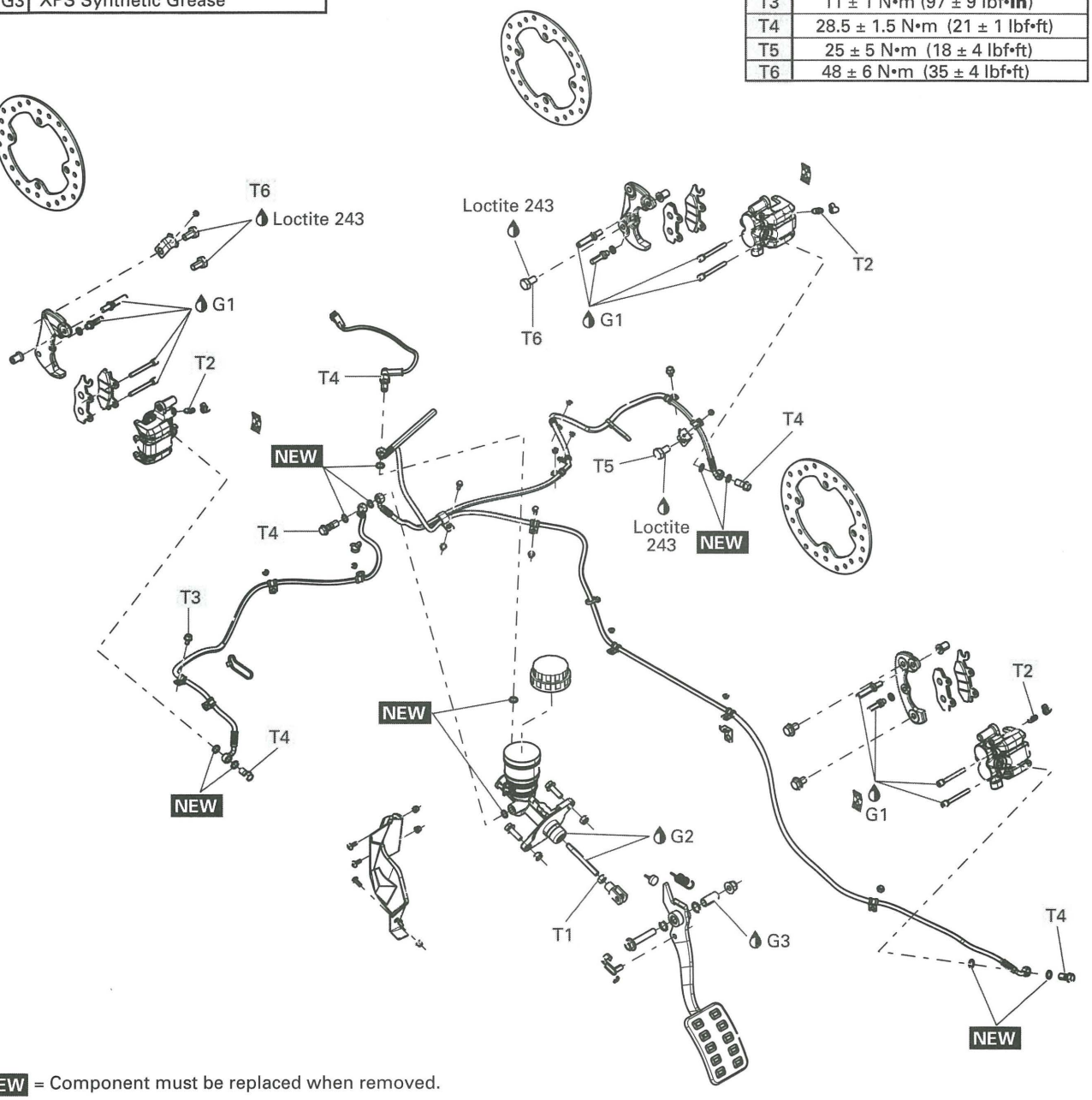

NEW = Component must be replaced when removed.

tmr2013-044-101

GENERAL

⚠ WARNING

Always check brake system operation after removing or servicing a brake component. If brake pedal feels spongy, make sure all components are properly installed and system is properly bled.

NOTICE **Avoid spilling brake fluid on plastic, rubber or painted parts. Protect these parts with a rag when servicing brake system.**

NOTE: Sealing washers must be discarded and replaced with new ones every time a Banjo fitting is unscrewed.

NOTE: Always clean the area around a brake component before servicing.

INSPECTION

BRAKE SYSTEM PRESSURE VALIDATION

NOTICE **Do not pump up the brake pedal repeatedly before doing the validation.**

1. Use an appropriate compression force gauge such as *MARK-10 EG-200* and a ruler.

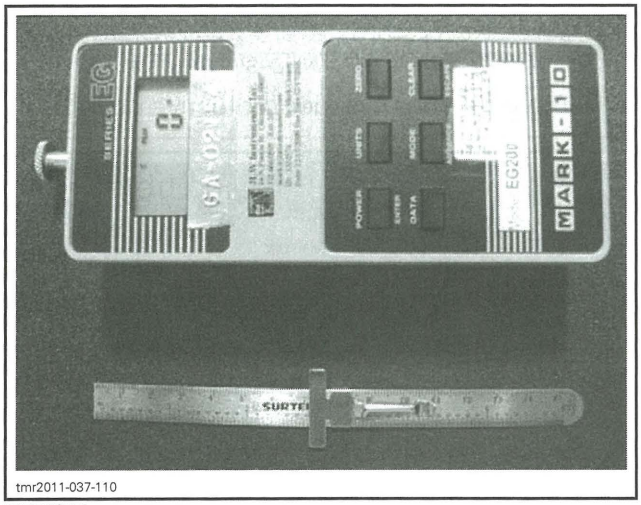

tmr2011-037-110

TYPICAL

2. Position force gauge on brake pedal at 64 mm ± 5 mm (2.5 in ± .2 in) from lower edge.
3. Position a ruler perpendicularly to brake pedal.

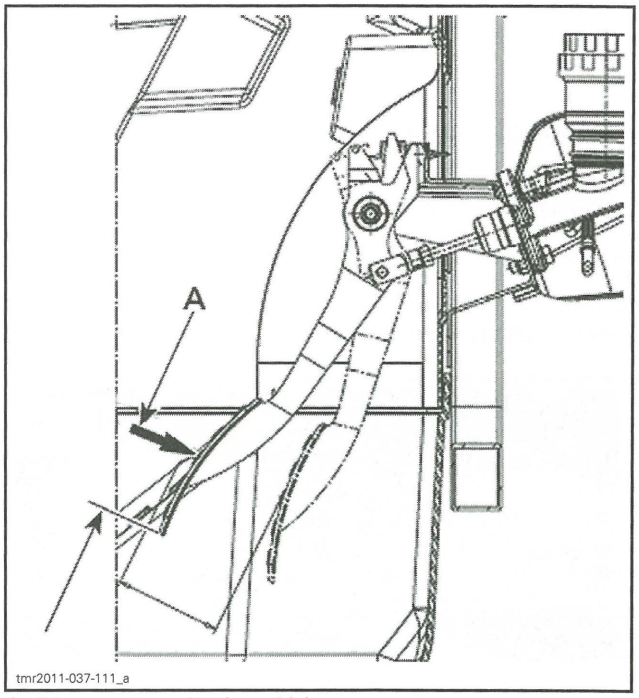

tmr2011-037-111_a

A. 64 mm ± 5 mm (2.5 in ± .2 in)

4. Push brake pedal from 70 mm (2-3/4 in) using force gauge.

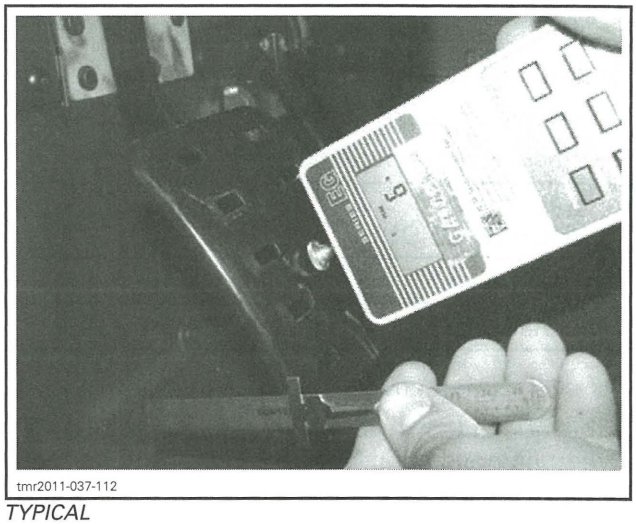

tmr2011-037-112

TYPICAL

5. Read the maximum load recorded by the force gauge.
6. Load reading must be as per the following table.

BRAKE PEDAL LOAD AT 70 MM
Minimum 250 N (56 lbf)

7. If load reading is not in accordance with the specification:
   - 7.1 Perform a brake system inspection and cleaning.
   - 7.2 Bleed brake system.

NOTE: Refer to *PERIODIC MAINTENANCE PROCEDURES* subsection.

PROCEDURES

BRAKE LIGHT SWITCH

Brake Light Switch Location

Brake light switch is located underneath LH front fender on master cylinder.

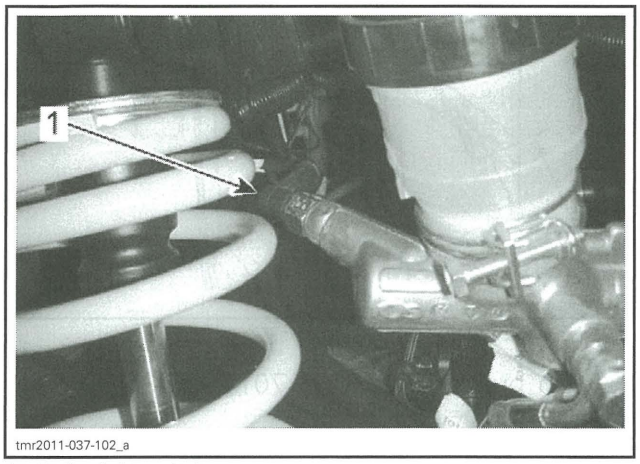

1. Brake light switch

Brake Light Switch Resistance Test

1. Disconnect brake light switch connector.
2. Check switch operation as follows.

BRAKE LIGHT SWITCH POSITION	PIN		RESISTANCE
Firmly pushed	1	2	Close to 0 Ω
Released			Infinite (OL)

If switch is defective, replace with a new one.

If the switch tests good, verify wire continuity between harness connector and ECM-B connector.

NOTE: Use the ECM ADAPTER TOOL (P/N 529 036 166).

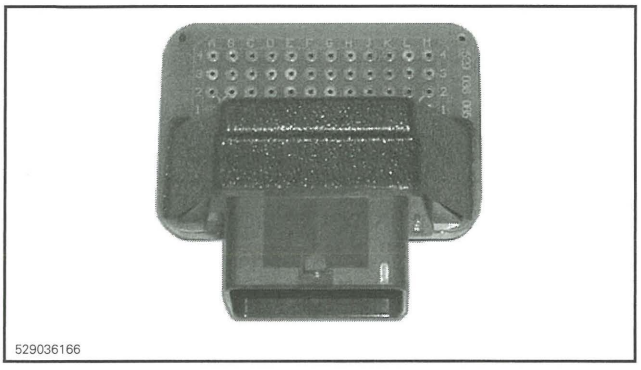

ECM-B CONNECTOR PIN	HARNESS CONNECTOR WIRES	RESISTANCE
C-3	RED/ORANGE	Close to 0 Ω

NOTE: If only the LH taillight does not work, check brake relay (R8) in fuse box 1.

Brake Light Switch Replacement

1. Disconnect brake light switch connector.
2. Drain rear brake line.
3. Remove brake light switch from master cylinder.

NOTE: Use shop rags to catch any spilled brake fluid.

4. Install **NEW** sealing washers.
5. Install brake light switch on master cylinder.

BRAKE LIGHT SWITCH NUT TORQUE
28.5 N•m ± 1.5 N•m (21 lbf•ft ± 1 lbf•ft)

6. Connect brake light switch connector.
7. Refill and bleed brake system, refer to *PERIODIC MAINTENANCE PROCEDURES* subsection.

MASTER CYLINDER

Master Cylinder Removal

1. Drain brake system, refer to *PERIODIC MAINTENANCE PROCEDURES* subsection.
2. Remove master cylinder protective cover.

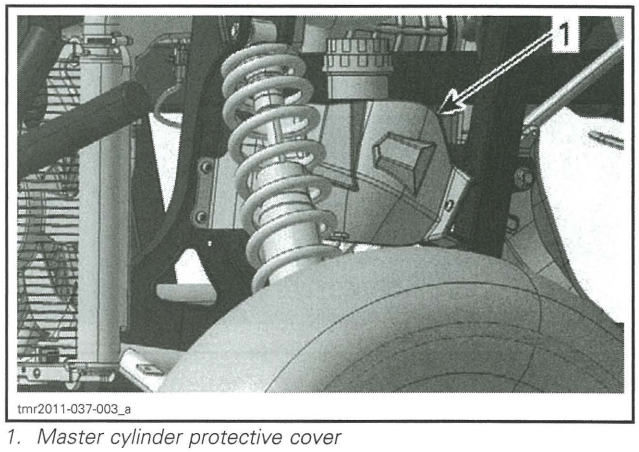

1. Master cylinder protective cover

3. Remove brake light switch retaining rear brake hose.

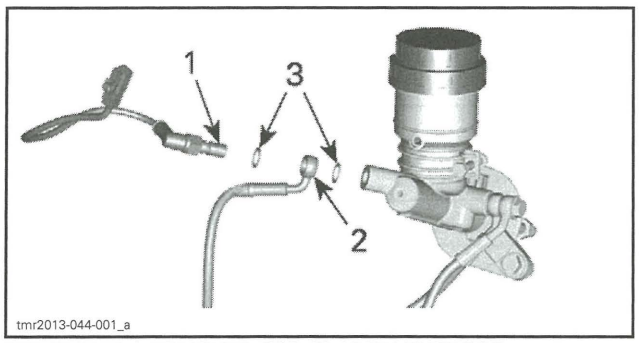

SOME PARTS REMOVED FOR CLARITY PURPOSE
1. *Brake light switch*
2. *Rear brake hose*
3. *Sealing washers*

4. Unscrew front brake hoses from master cylinder.

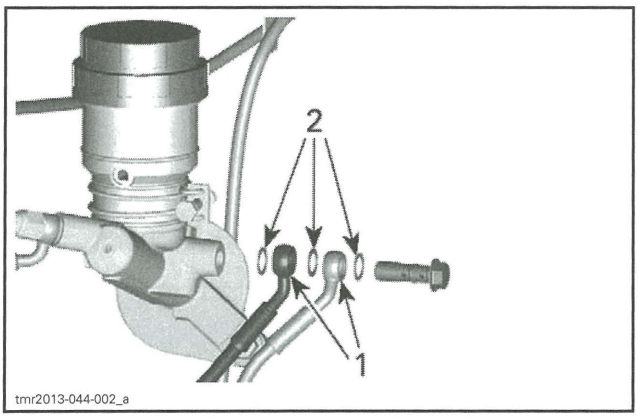

SOME PARTS REMOVED FOR CLARITY PURPOSE
1. *Front brake hoses*
2. *Sealing washers*

5. Remove protective rubber from underneath dashboard.

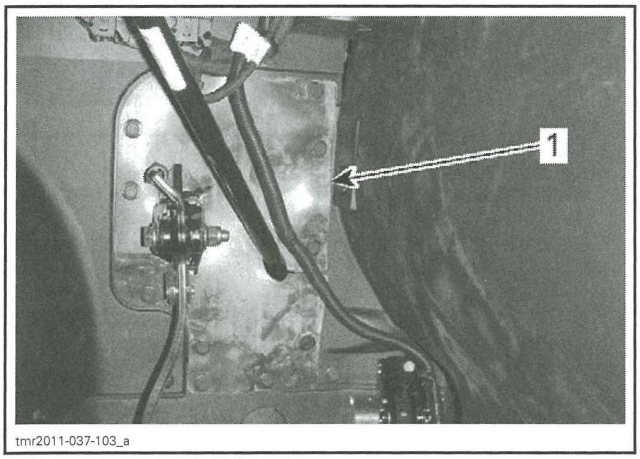

UNDERNEATH DASHBOARD
1. *Protective rubber*

6. Remove cotter pin.
7. Disconnect brake pedal clip.
8. Disconnect master cylinder rod from brake pedal.

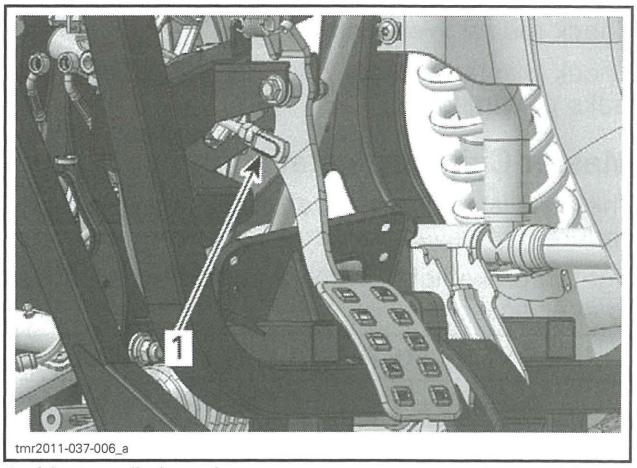

1. *Master cylinder rod*

9. Remove master cylinder rod from master cylinder.

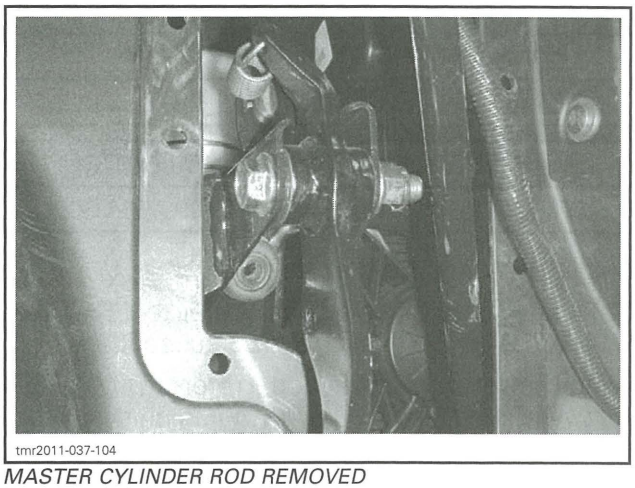

MASTER CYLINDER ROD REMOVED

10. Remove master cylinder retaining bolts and nuts.

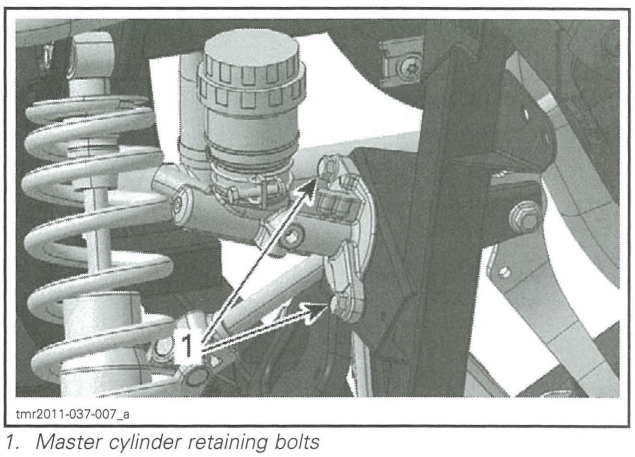

1. *Master cylinder retaining bolts*

11. Remove master cylinder from vehicle.

Master Cylinder Inspection

Check boot for crack.

Check rod for wear and scratch.

Check master cylinder housing and reservoir for leaks or damage.

Master Cylinder Installation

The installation is the reverse of the removal procedure. However, pay attention to the following.

Tighten brake light switch and front brake hoses to specification.

FRONT BRAKE HOSES SCREW TORQUE
28.5 N•m ± 1.5 N•m (21 lbf•ft ± 1 lbf•ft)

BRAKE LIGHT SWITCH NUT TORQUE
28.5 N•m ± 1.5 N•m (21 lbf•ft ± 1 lbf•ft)

Lubricate push rod end and inside master cylinder boot.

PUSH ROD END LUBRICATION
COSMO RUBBER GREASE (P/N 293 550 055)

MASTER CYLINDER BOOT LUBRICATION
COSMO RUBBER GREASE (P/N 293 550 055)

Install **NEW** sealing washers.

Refill and bleed brake system, refer to *PERIODIC MAINTENANCE PROCEDURES* subsection.

Adjust master cylinder rod, refer to *MASTER CYLINDER ROD ADJUSTMENT* in this subsection.

Master Cylinder Rod Adjustment

1. Loosen locking nut of master cylinder rod.
2. Move brake pedal up and down to check if there is a free play.

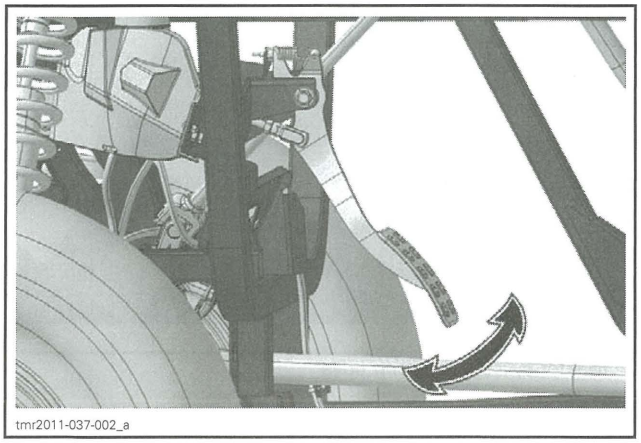
tmr2011-037-002_a

3. Rotate master cylinder rod to generate a free play according to specification.

BRAKE PEDAL FREE PLAY
3.5 mm ± 1.5 mm (1/8 in ± 1/16 in)

4. Tighten locking nut of master cylinder rod to specification.

ROD LOCKING NUT TORQUE
5 N•m ± 1 N•m (44 lbf•**in** ± 9 lbf•**in**)

CALIPER

Caliper Removal

1. Safely lift and support the vehicle. Refer to *INTRODUCTION* subsection.
2. Remove wheel, refer to *WHEELS AND TIRES* subsection.
3. If caliper is removed from vehicle for replacement:
   - 3.1 Drain brake system, refer to *PERIODIC MAINTENANCE PROCEDURES* subsection.
   - 3.2 Unscrew brake hose from caliper.

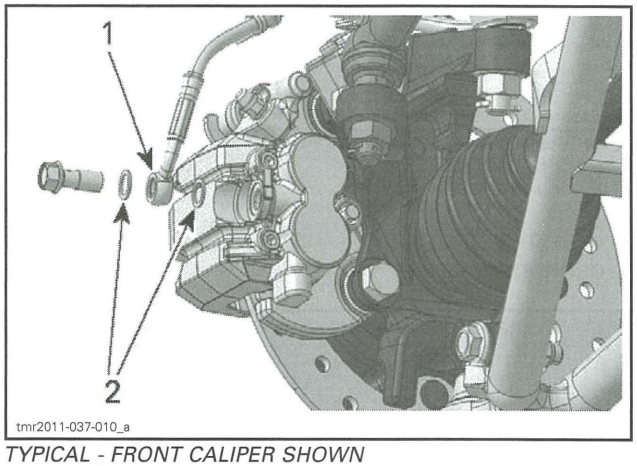

tmr2011-037-010_a

TYPICAL - FRONT CALIPER SHOWN
1. Brake hose
2. Sealing washers

4. Remove fasteners retaining brake hose to knuckle.
5. Remove screws securing caliper support to knuckle.

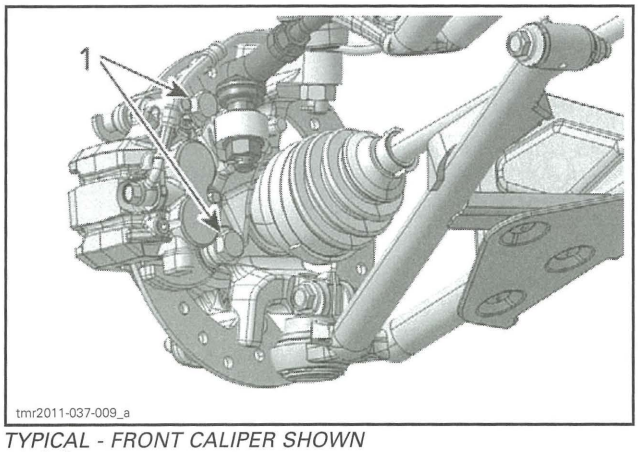

TYPICAL - FRONT CALIPER SHOWN
1. Caliper screws

6. Place caliper assembly onto a support.

NOTICE **Do not let caliper hangs by the hose and do not stretch or twist hose.**

Caliper Installation

The installation is the reverse of the removal procedure. However, pay attention to the following.

If caliper was removed for replacement:

- Refill and bleed brake system, refer to *PERIODIC MAINTENANCE PROCEDURES* subsection.
- Install **NEW** sealing washers.

Apply threadlocker on caliper retaining screws.

CALIPER RETAINING SCREWS THREADLOCKER
LOCTITE 243 (BLUE) (P/N 293 800 060)

Tighten caliper retaining screws to specification.

CALIPER RETAINING SCREWS TORQUE
48 N•m ± 6 N•m (35 lbf•ft ± 4 lbf•ft)

BRAKE PADS

Brake Pads Replacement

1. Remove caliper from knuckle, refer to *CALIPER REMOVAL* in this subsection.
2. Remove brake pad pins from caliper.

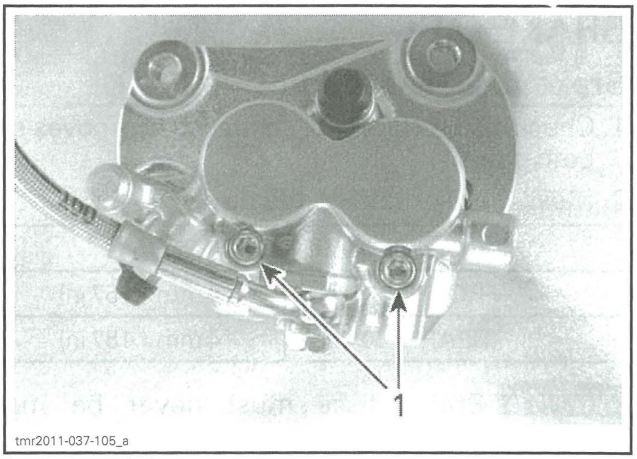

1. Brake pad pins

3. Remove brake pads.
4. Clean pistons end using XPS BRAKES AND PARTS CLEANER (P/N 219 701 705).
5. Push caliper pistons inward.

NOTE: To avoid damaging pistons, use an old pad to push it into the caliper using a C-clamp.

6. Ensure brake pad spring is properly positioned onto caliper.

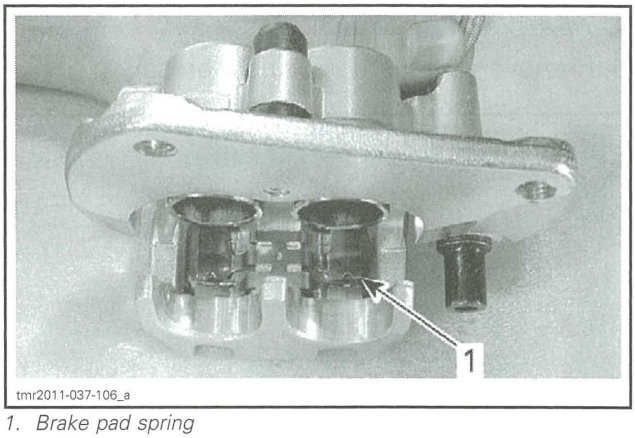

1. Brake pad spring

7. Install **NEW** brake pads.
8. Clean brake pad pins using XPS BRAKES AND PARTS CLEANER (P/N 219 701 705).
9. Install brake pad pins on caliper and torque to specification.

BRAKE PAD PINS
17.5 N•m ± 2.5 N•m (155 lbf•**in** ± 22 lbf•**in**)

10. Install caliper on knuckle, refer to *CALIPER INSTALLATION* in this subsection.

BRAKE DISC

Brake Disc Inspection

1. Check disc surfaces for scratches or grooves on both sides.
2. Measure thickness of the disc.

DISC MINIMUM THICKNESS	
FRONT	4 mm (.157 in)
REAR	4 mm (.157 in)

NOTICE Brake discs must never be machined.

3. Check warpage of the disc.

MAXIMUM DISC WARPAGE	
FRONT	0.2 mm (.01 in)
REAR	

Brake Disc Replacement

1. Remove caliper from knuckle, refer to *CALIPER REMOVAL* in this subsection.
2. Remove wheel hub, refer to *FRONT DRIVE* or *REAR DRIVE* subsection.
3. Remove wheel studs using a press.

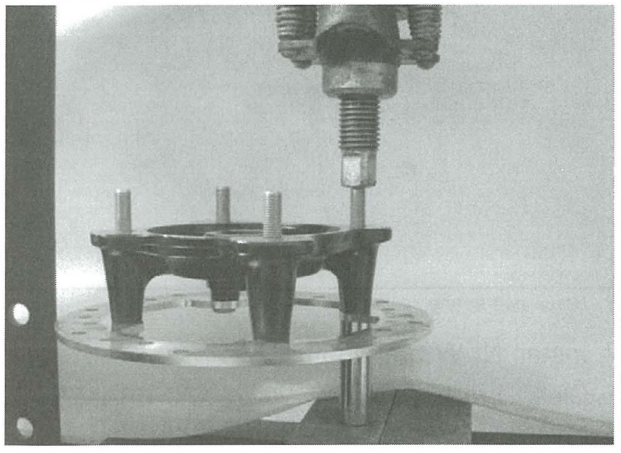

tmr2011-037-107

4. Replace brake disc.
5. Align wheel stud knurling into hub grooves.
6. Install wheel studs using a press.

NOTE: If wheel studs are damaged, replace them.

7. Install wheel hub then caliper.
8. Install NEW cotter pin to secure wheel hub nut.

BODY

SERVICE TOOLS

Description	Part Number	Page
OETIKER PLIERS	295 000 070	431

BODY (Parts Nomenclature)

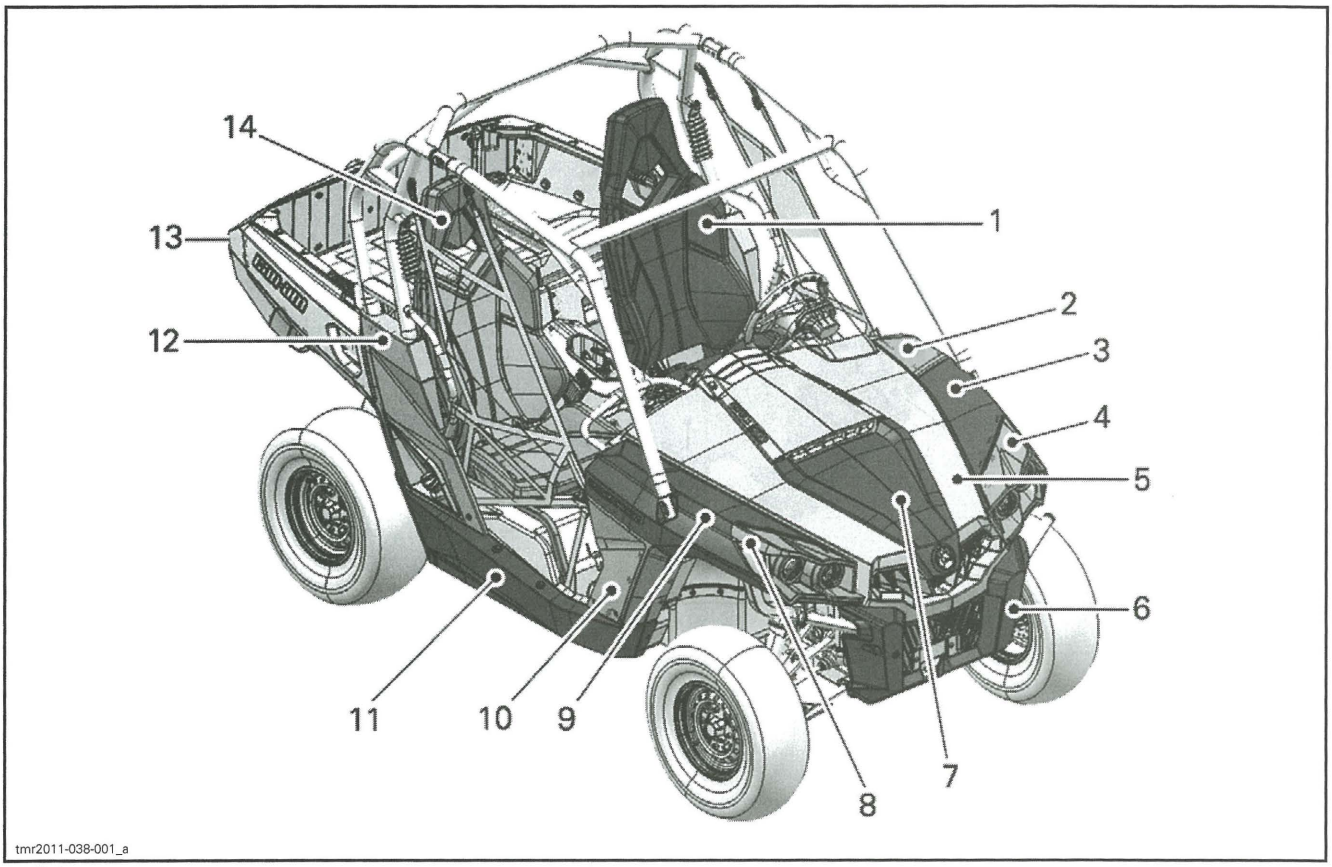

1. *Driver seat*
2. *CVT air inlet cover*
3. *LH front fender*
4. *LH headlight trim*
5. *Hood*
6. *Front fascia*
7. *Service cover*
8. *RH headlight trim*
9. *RH front fender*
10. *Front lateral panel*
11. *Central lateral panel*
12. *Rear lateral panel*
13. *Cargo box*
14. *Passenger seat*

COCKPIT – PASSENGER SIDE (Parts Nomenclature)

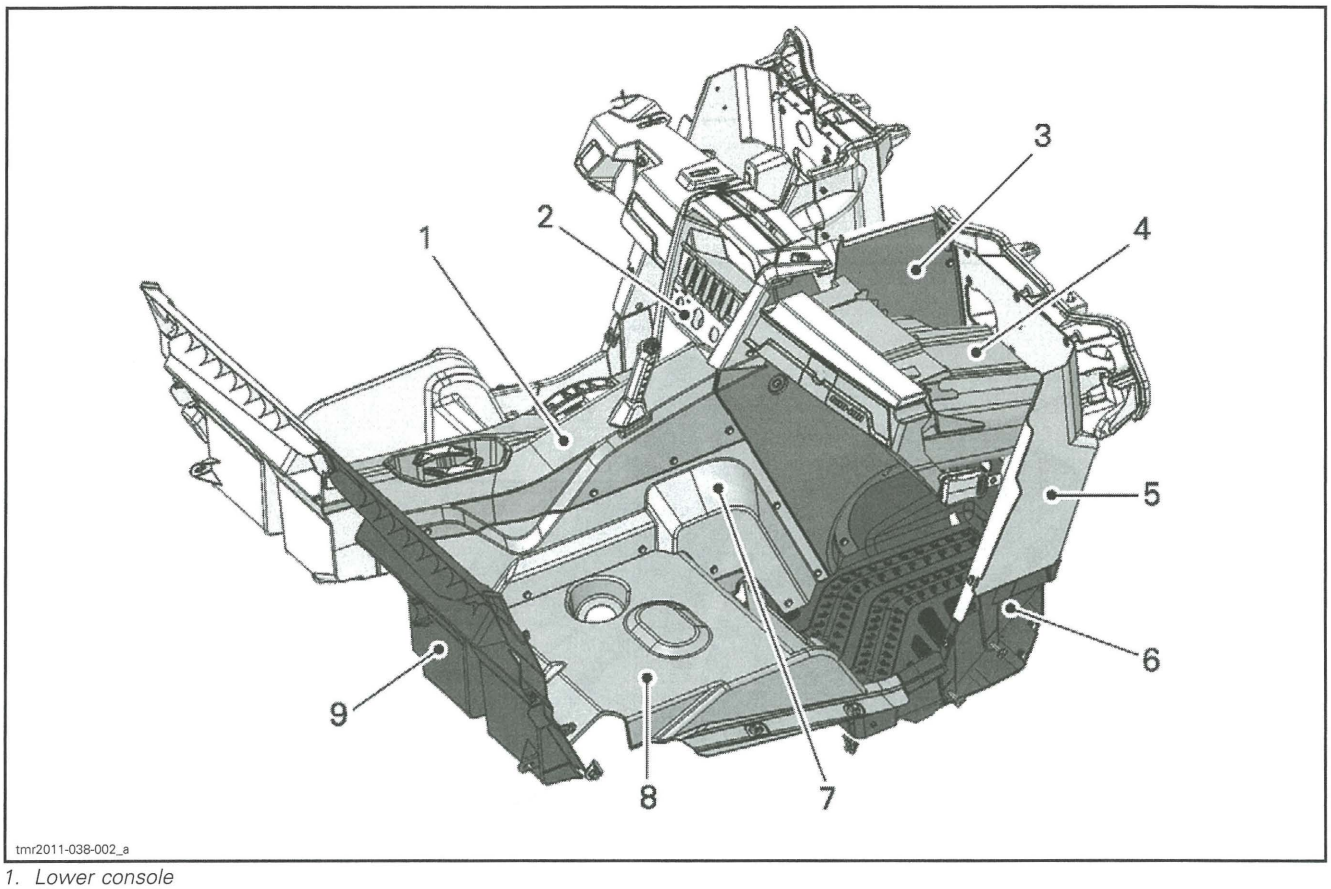

1. *Lower console*
2. *Upper console*
3. *RH inner kick panel*
4. *Glove box*
5. *Right front bulkhead*
6. *Right floor panel*
7. *Right lateral console panel*
8. *Fuel tank cowl*
9. *Right rear bulkhead*

COCKPIT – DRIVER SIDE (Parts Nomenclature)

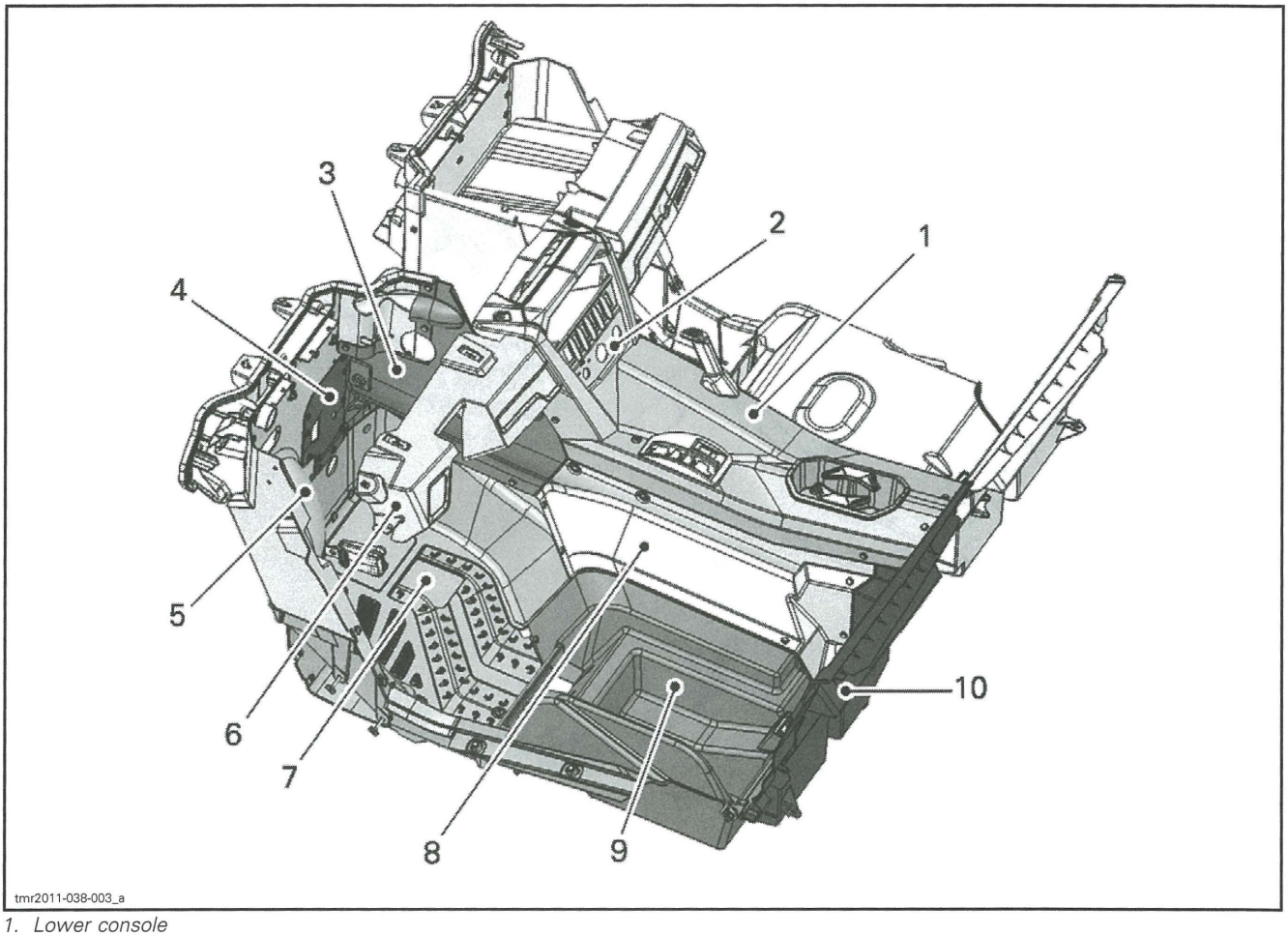

1. *Lower console*
2. *Upper console*
3. *LH inner kick panel*
4. *Bulkhead access panel*
5. *Left front bulkhead*
6. *Dash*
7. *Left floor panel*
8. *Left lateral console panel*
9. *Under seat storage compartment*
10. *Left rear bulkhead*

FRONT BODY PARTS (Torques and Service Products)

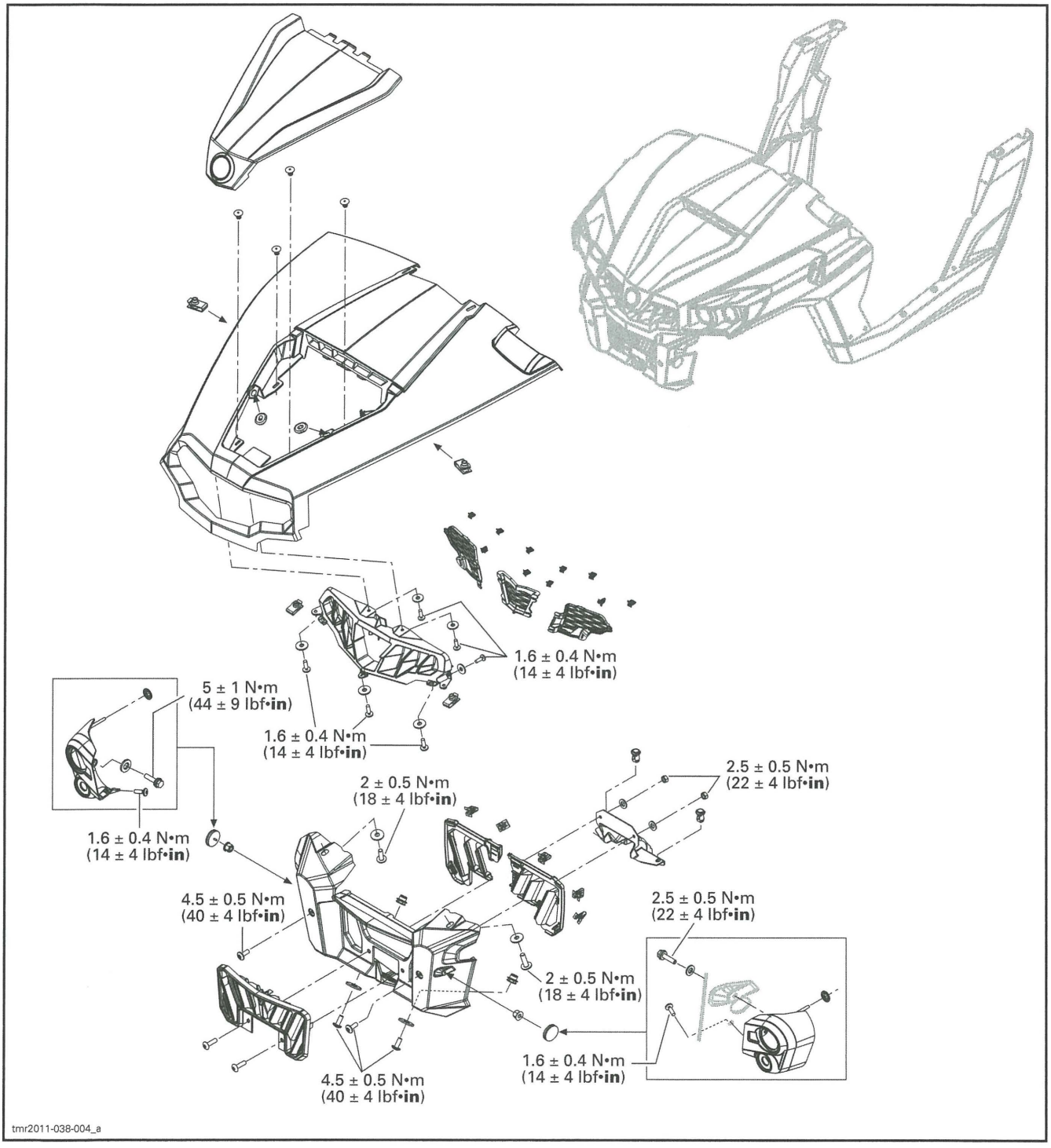

SIDE BODY PARTS (Torques and Service Products)

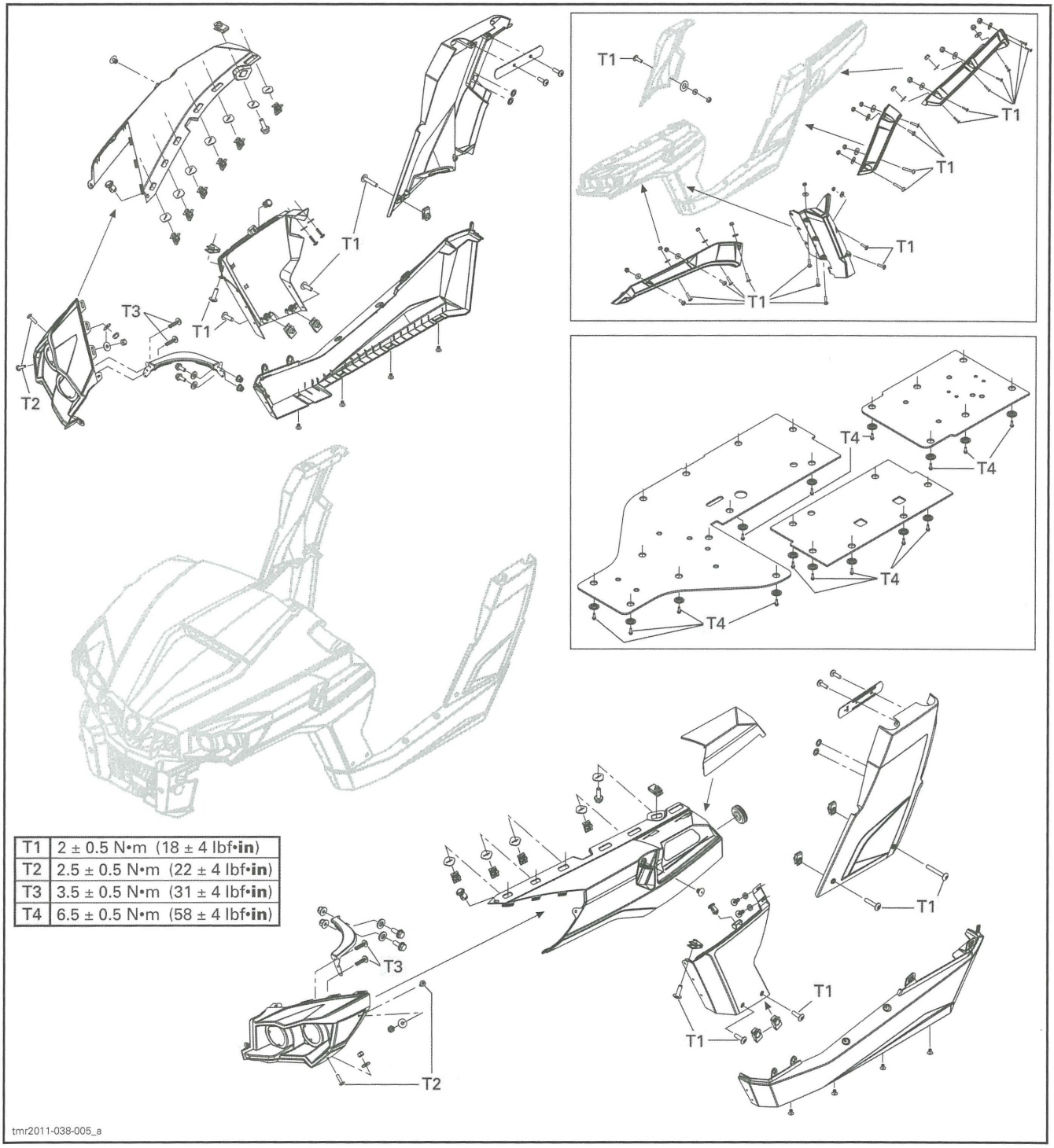

T1	2 ± 0.5 N•m (18 ± 4 lbf•**in**)
T2	2.5 ± 0.5 N•m (22 ± 4 lbf•**in**)
T3	3.5 ± 0.5 N•m (31 ± 4 lbf•**in**)
T4	6.5 ± 0.5 N•m (58 ± 4 lbf•**in**)

tmr2011-038-005_a

COCKPIT TRIMS – DRIVER SIDE (Torques and Service Products)

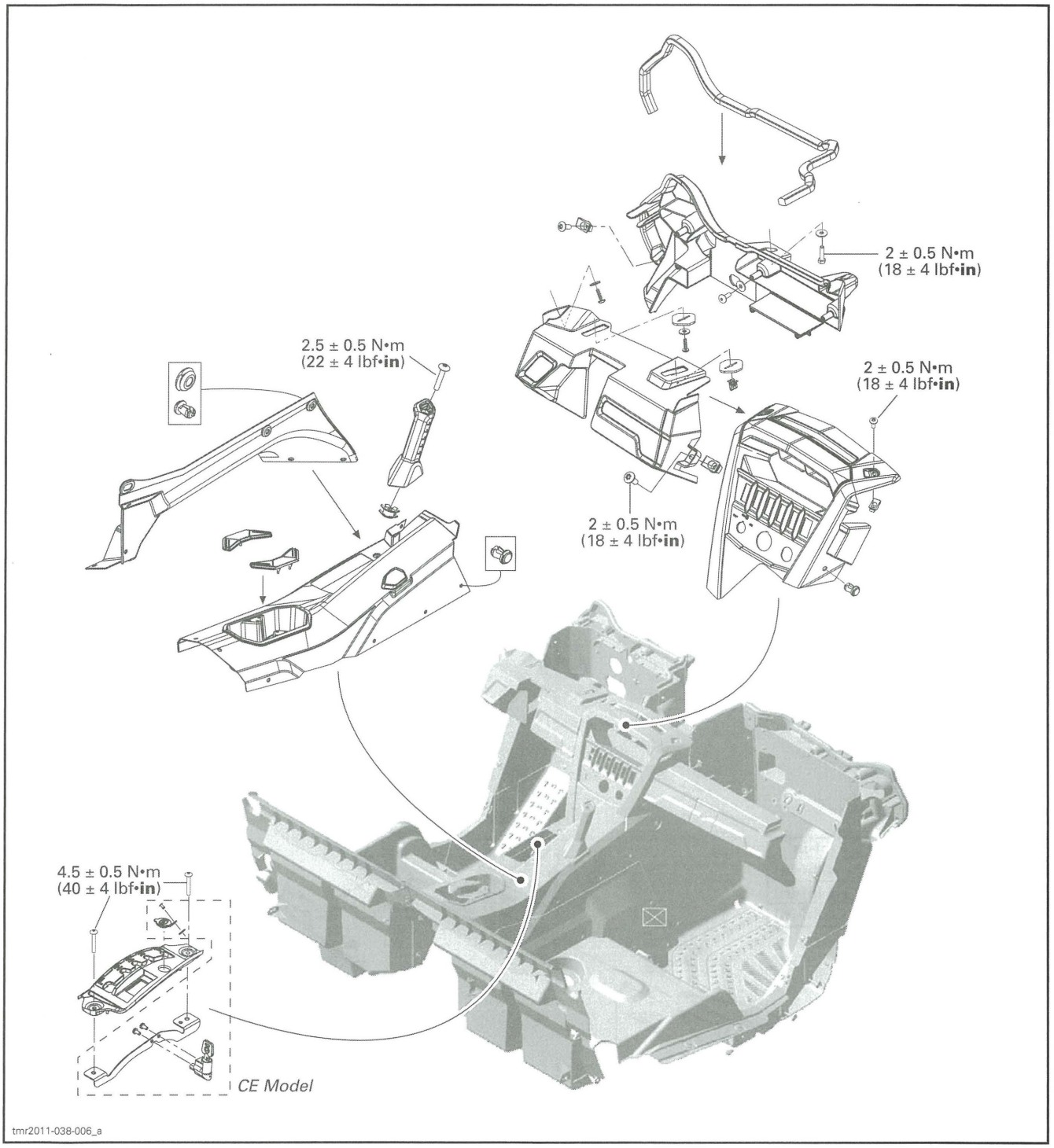

COCKPIT TRIMS – PASSENGER SIDE (Torques and Service Products)

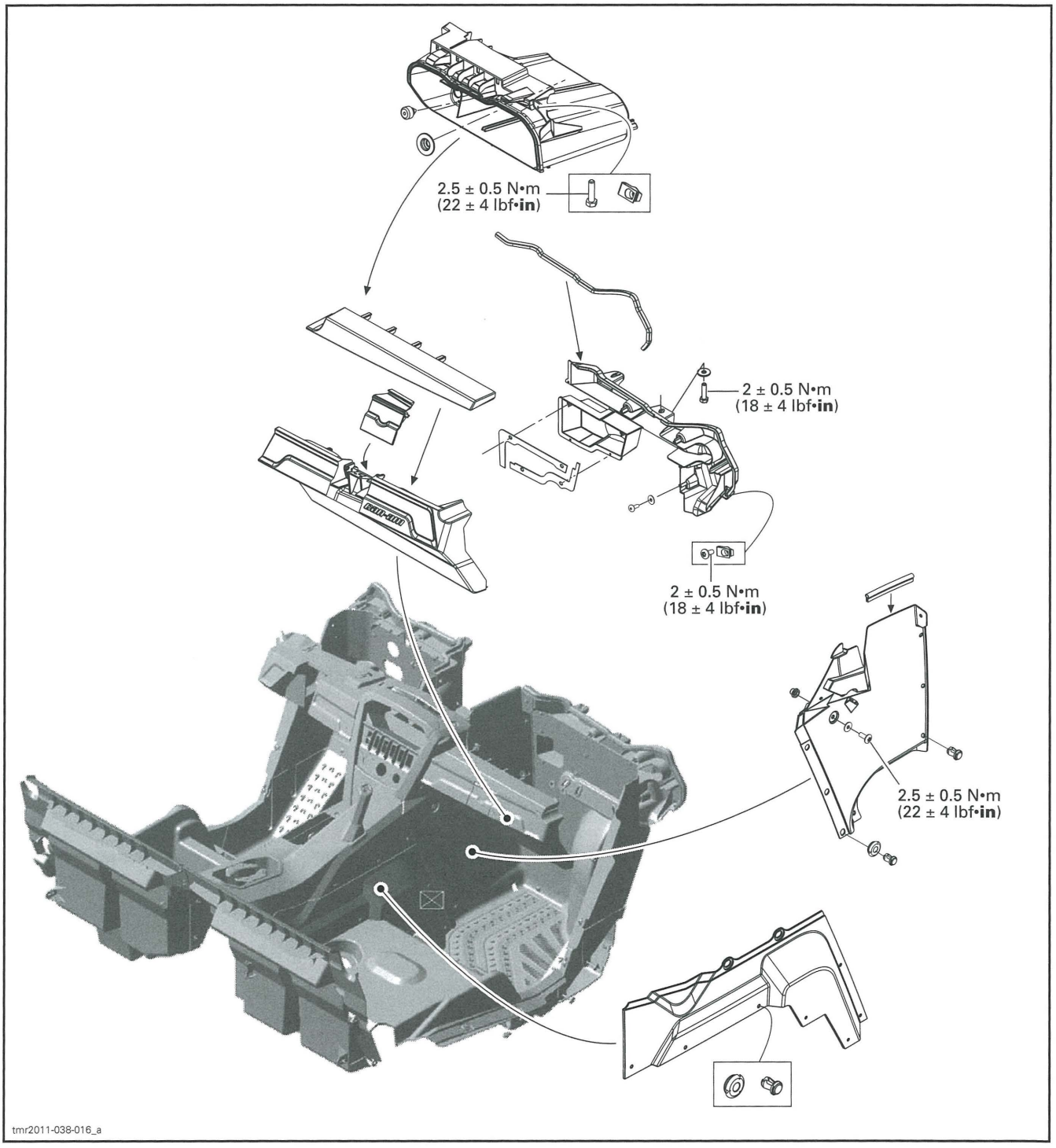

COCKPIT STRUCTURE PANELS – PASSENGER SIDE (Torques and Service Products)

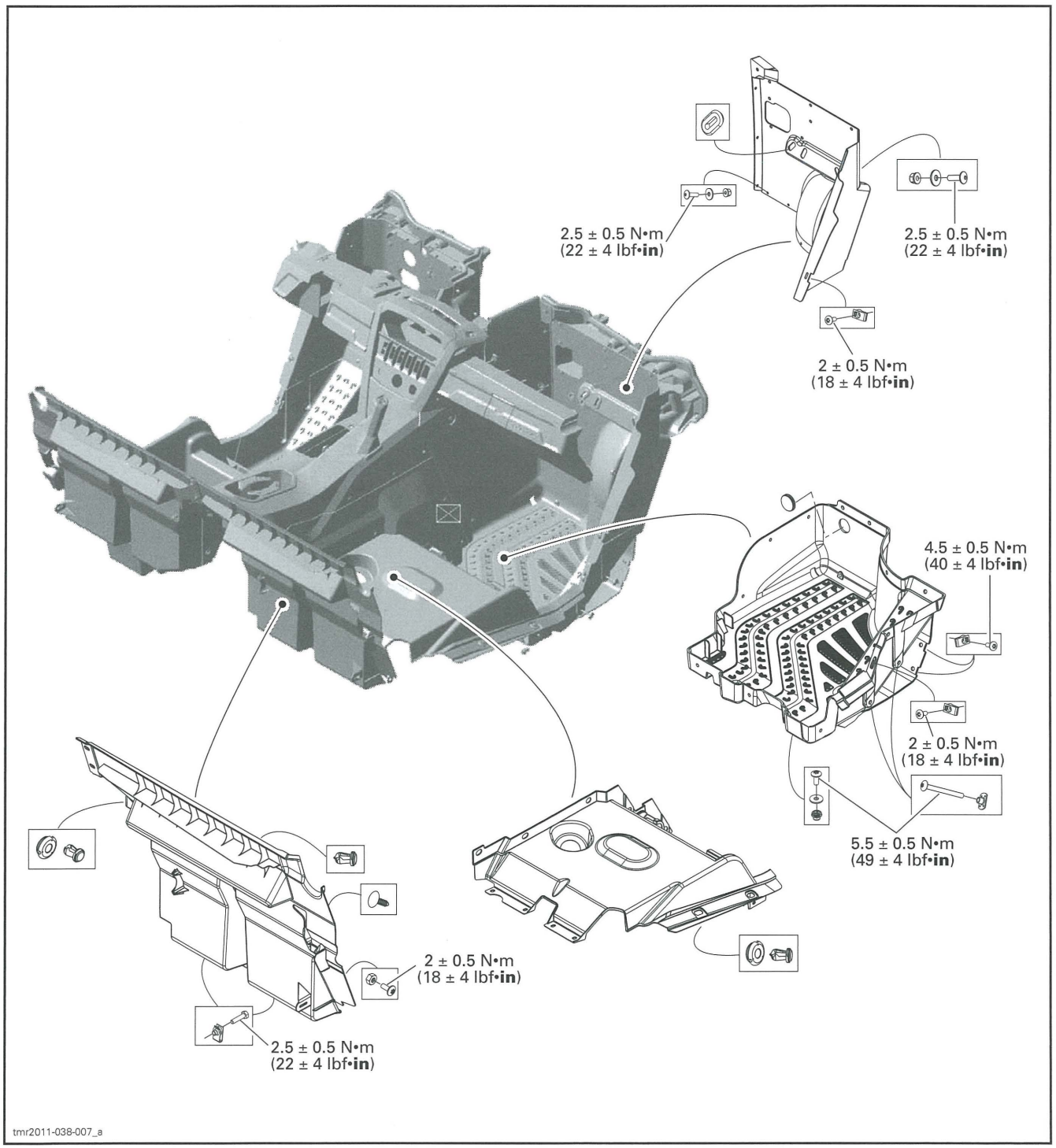

COCKPIT STRUCTURE PANELS – DRIVER SIDE (Torques and Service Products)

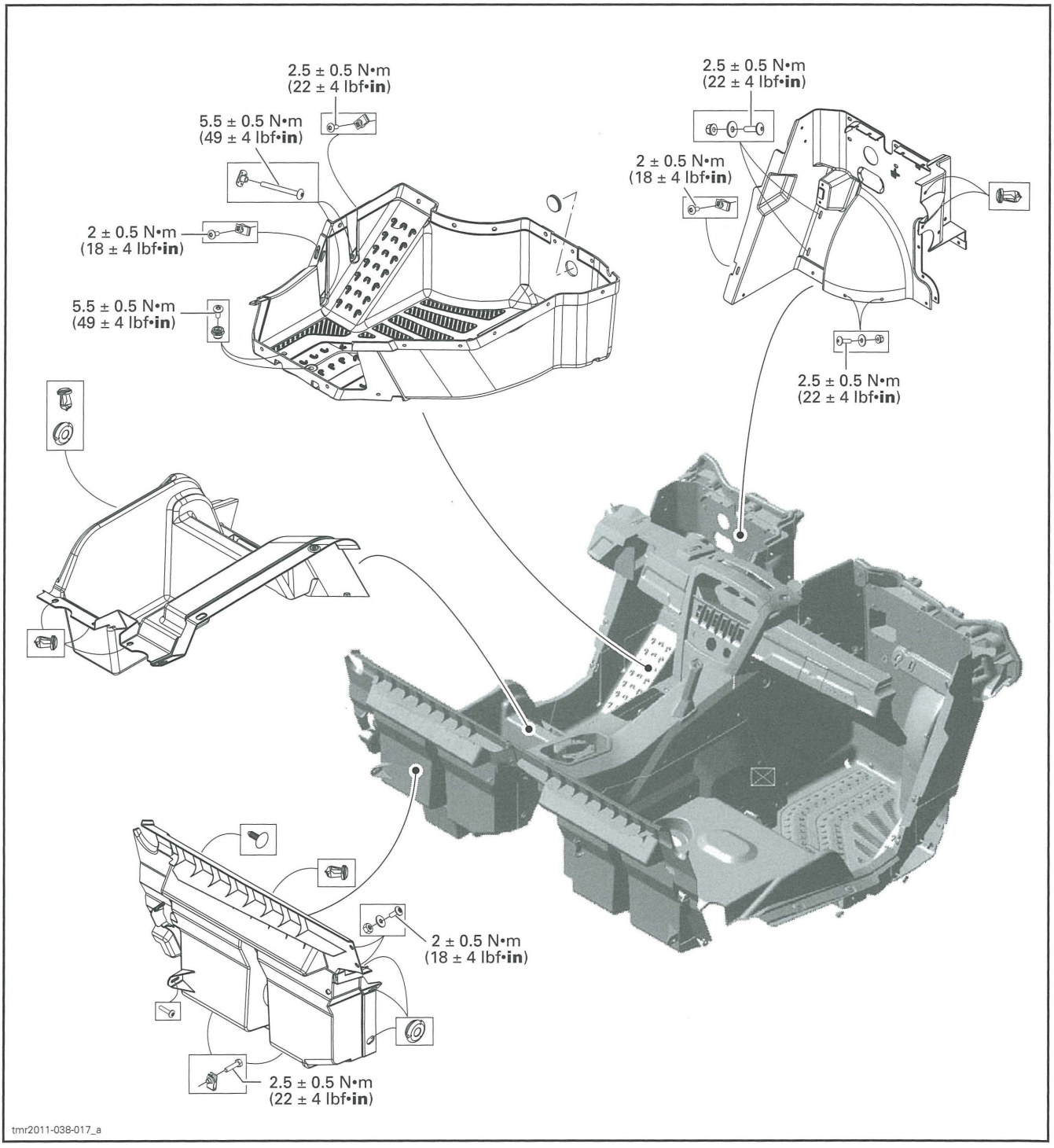

SEATS

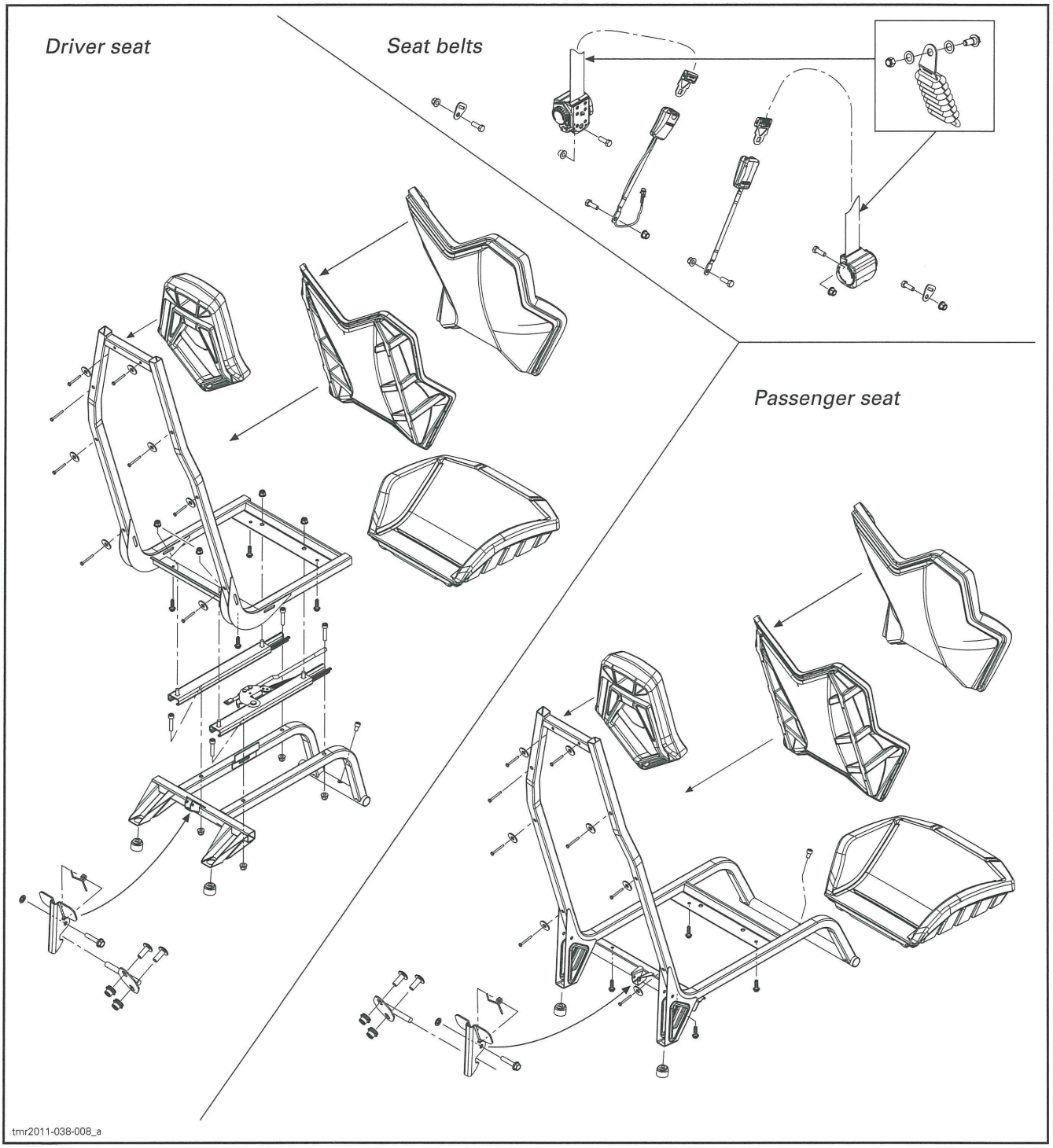

PROCEDURES

PLASTIC RIVET

Plastic rivets are used in the riveting of the various body parts. Plastic rivets can be reused many times. Use the OETIKER PLIERS (P/N 295 000 070) to remove them.

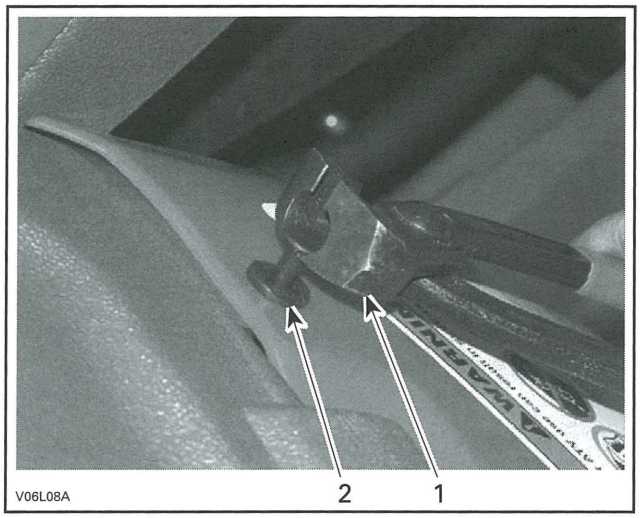

TYPICAL
1. *Pliers*
2. *Plastic rivet*

DECALS

Decal Removal

Using a heat gun warm up one end of decal for a few seconds until decal can roll off when rubbing with your finger.

Pull decal slowly and when necessary apply more heat to ease removal on the area that has to be peeled off.

If decal tears while pulling off, it has to be heated for a few seconds longer. If decal tends to stretch while pulling off, stop heating and wait a few seconds to let it cool, then peel it off.

Decal Installation

Using isopropyl alcohol, clean the surface and dry thoroughly.

Apply liquid soap to new decal and carefully position it. Using a sponge or a squeegee, remove the air bubbles and surplus water working from the center toward the edges. Allow to air dry.

NOTICE **Do not apply isopropyl alcohol or solvent directly on decals. Use these products in a well ventilated area.**

UPPER CONSOLE

Upper Console Removal and Installation

1. Remove:
   - Screws
   - Plastic rivets.

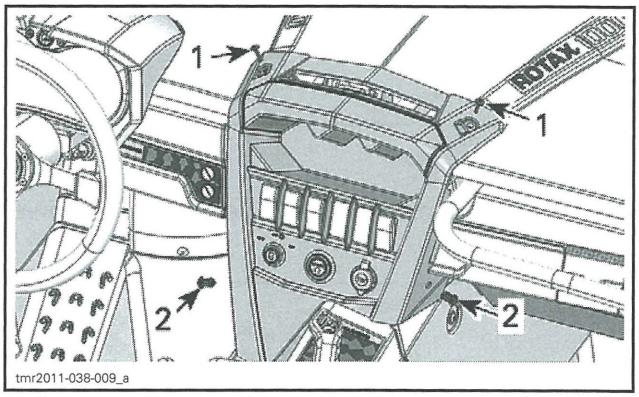

1. *Top screws*
2. *Plastic rivets*

2. Pull out the upper console and disconnect electrical connectors.
3. Remove the upper console.

The installation is the reverse of the removal procedure.

LOWER CONSOLE

Lower Console Removal and Installation

1. Remove both seats.
2. Remove screws and plastic rivets securing the upper console and place it on the hood.
3. Remove the LH passenger handhold screw.

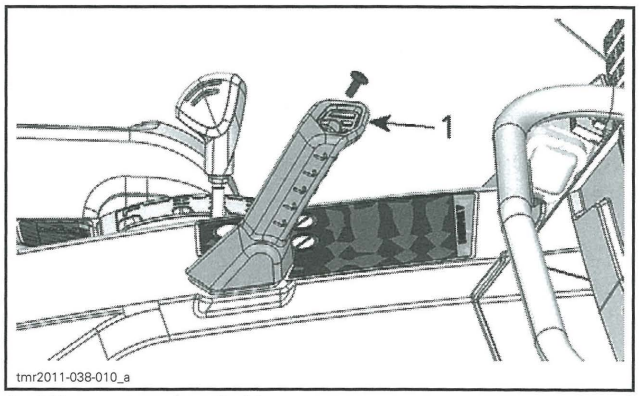

1. *LH passenger handhold*

4. Remove the front screw of the shift lever indicator.

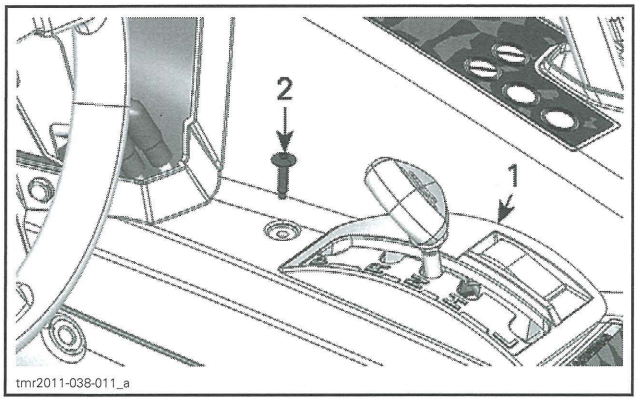

1. Shift lever indicator
2. Front retaining screw

5. Remove all plastic rivets securing the lower console.

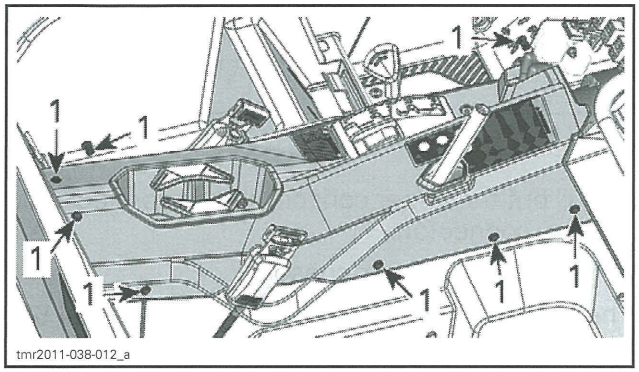

1. Plastic rivets

6. Remove the lower console.

The installation is the reverse of the removal procedure.

LATERAL CONSOLE PANELS

Lateral Console Panels Removal and Installation

1. Remove seat.
2. Remove plastic rivets securing the lateral console panel.
3. Remove the lateral console panel.

NOTE: On following illustrations, the cage and the side net are removed for clarity purpose.

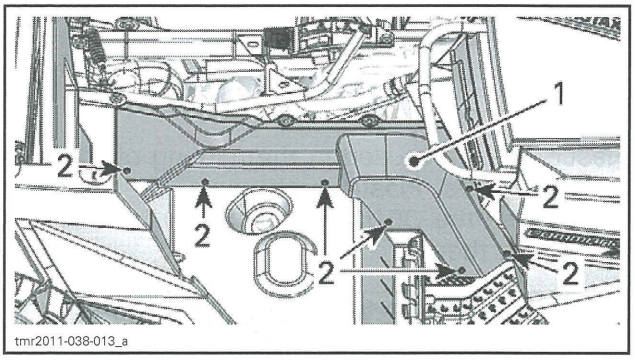

1. RH lateral console panel
2. Plastic rivets

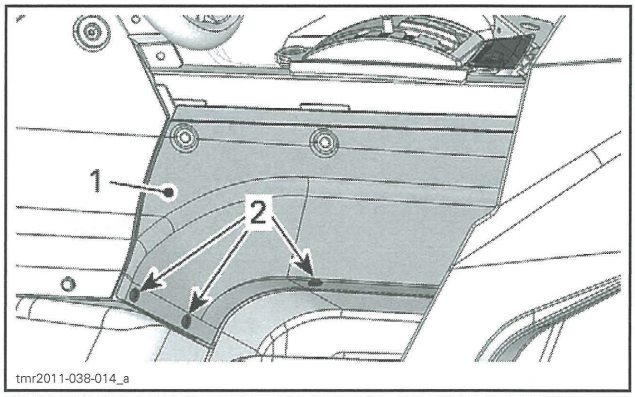

FRONT PORTION OF THE LH LATERAL CONSOLE PANEL
1. LH lateral console panel
2. Plastic rivets

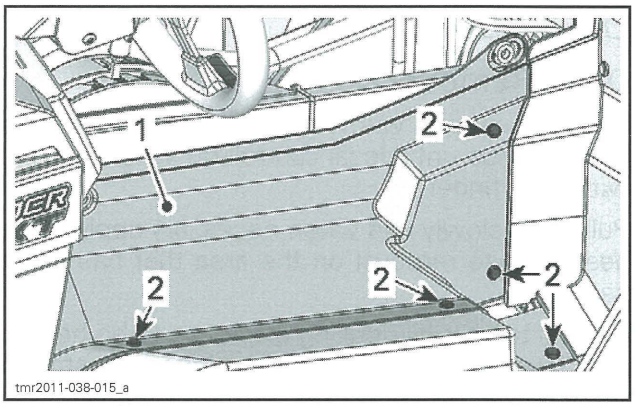

REAR PORTION OF THE LH LATERAL CONSOLE PANEL
1. LH lateral console panel
2. Plastic rivets

The installation of the lateral console panels is the reverse of the removal procedure.

GLOVE BOX REMOVAL AND INSTALLATION

1. Remove the glove box trim.

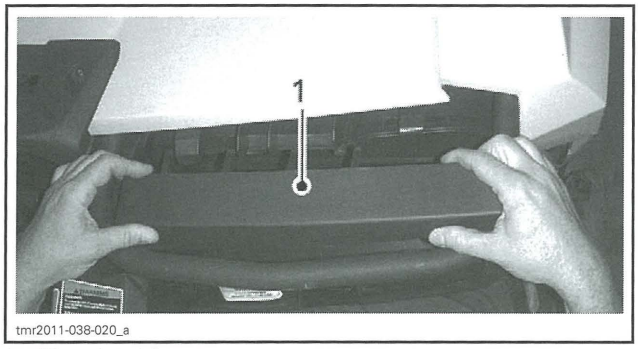

1. Glove box trim

2. Remove glove box retaining screws.

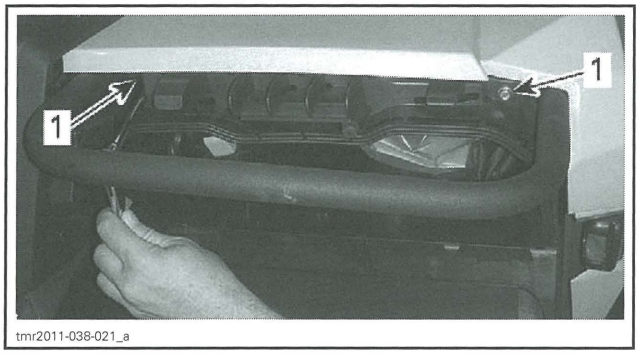

1. Glove box retaining screws

3. Pull glove box to remove it.

The installation of the glove box is the reverse of the removal procedure.

FUEL TANK COWL

Fuel Tank Cowl Removal and Installation

Remove rivets securing fuel tank cowl.

Remove fuel tank cowl.

The installation of the fuel tank cowl is the reverse of the removal.

SEAT COVER

Seat Cover Removal

Remove plastic clips securing seat cover to seat.

Remove seat cover from seat.

Seat Cover Installation

Install seat cover onto seat.

Apply pressure to padded areas for a close fit.

Insert plastic clips to secure seat cover onto seat.

CARGO BOX

CARGO BOX TRIMS

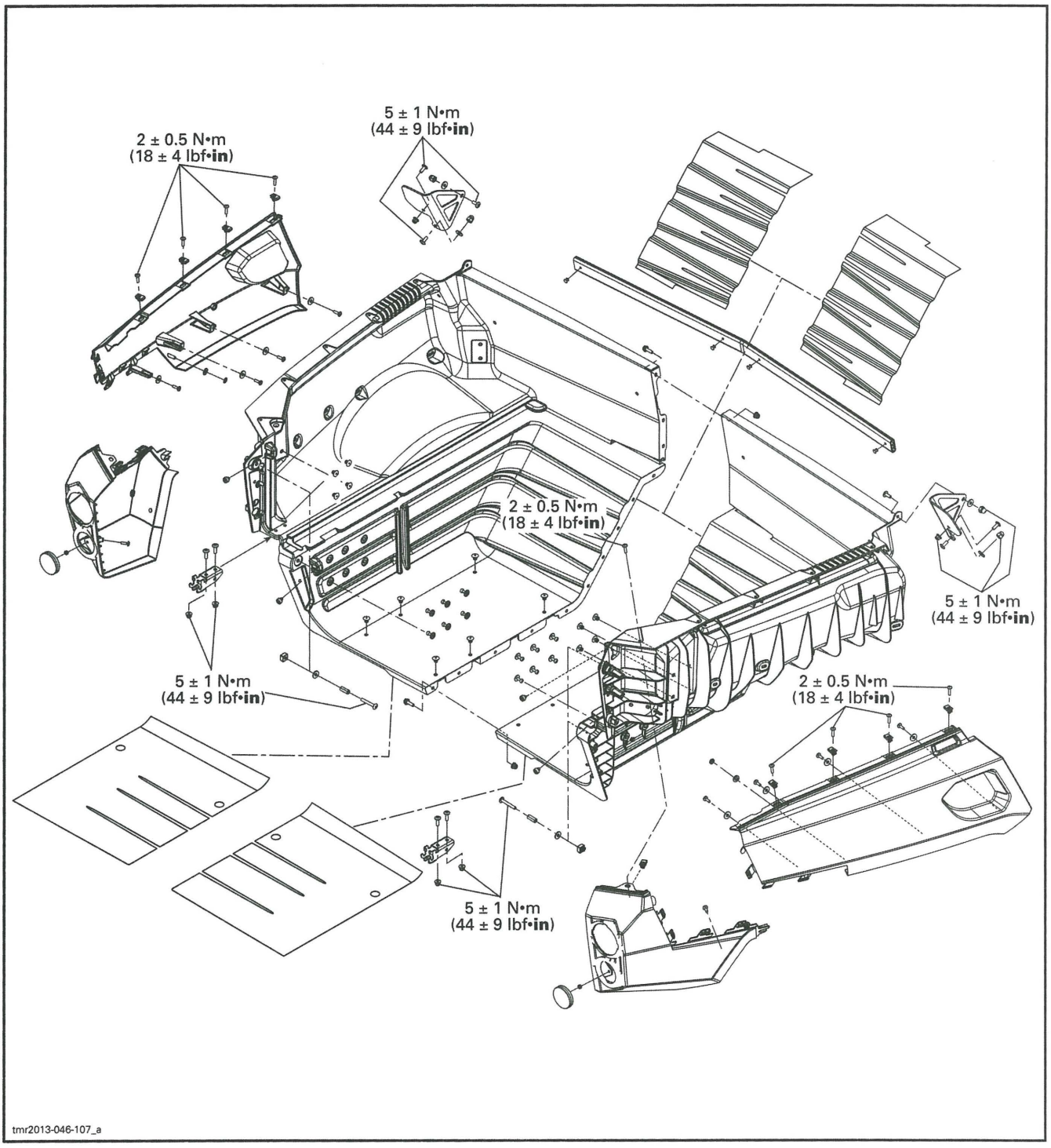

CARGO BOX TILT RELEASE MECHANISM

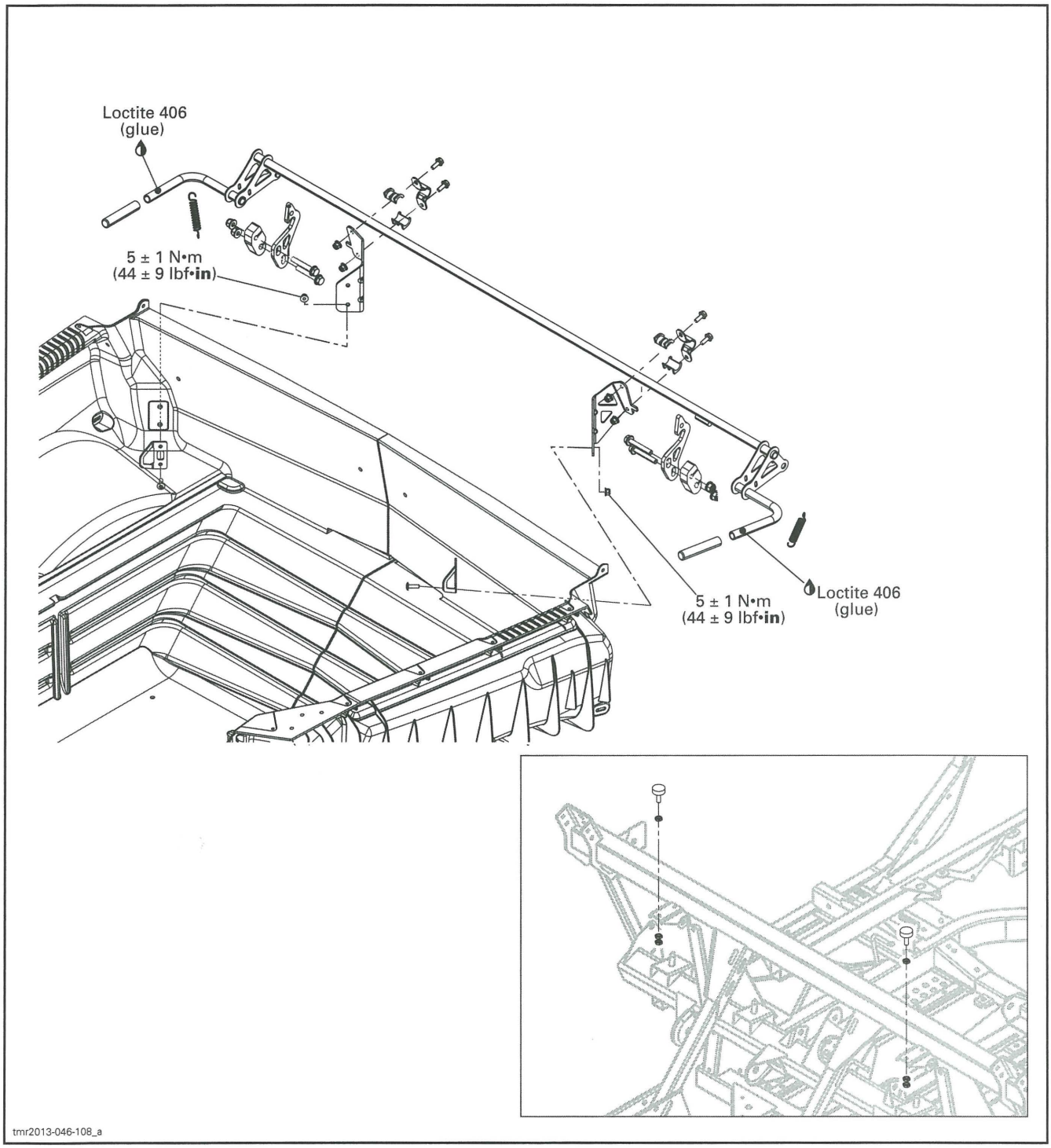

CARGO BOX SUPPORT

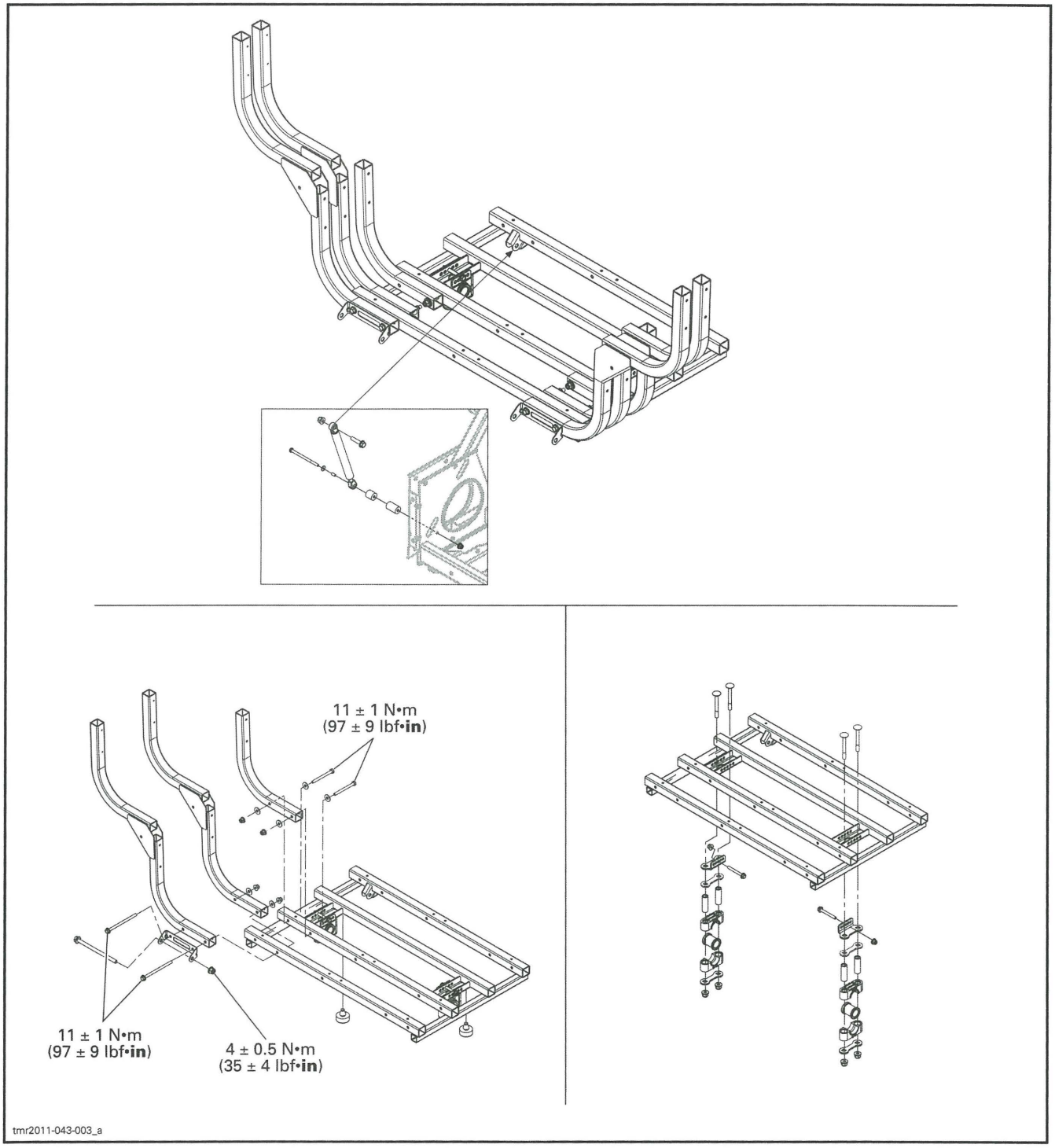

tmr2011-043-003_a

UPPER TAIL GATE

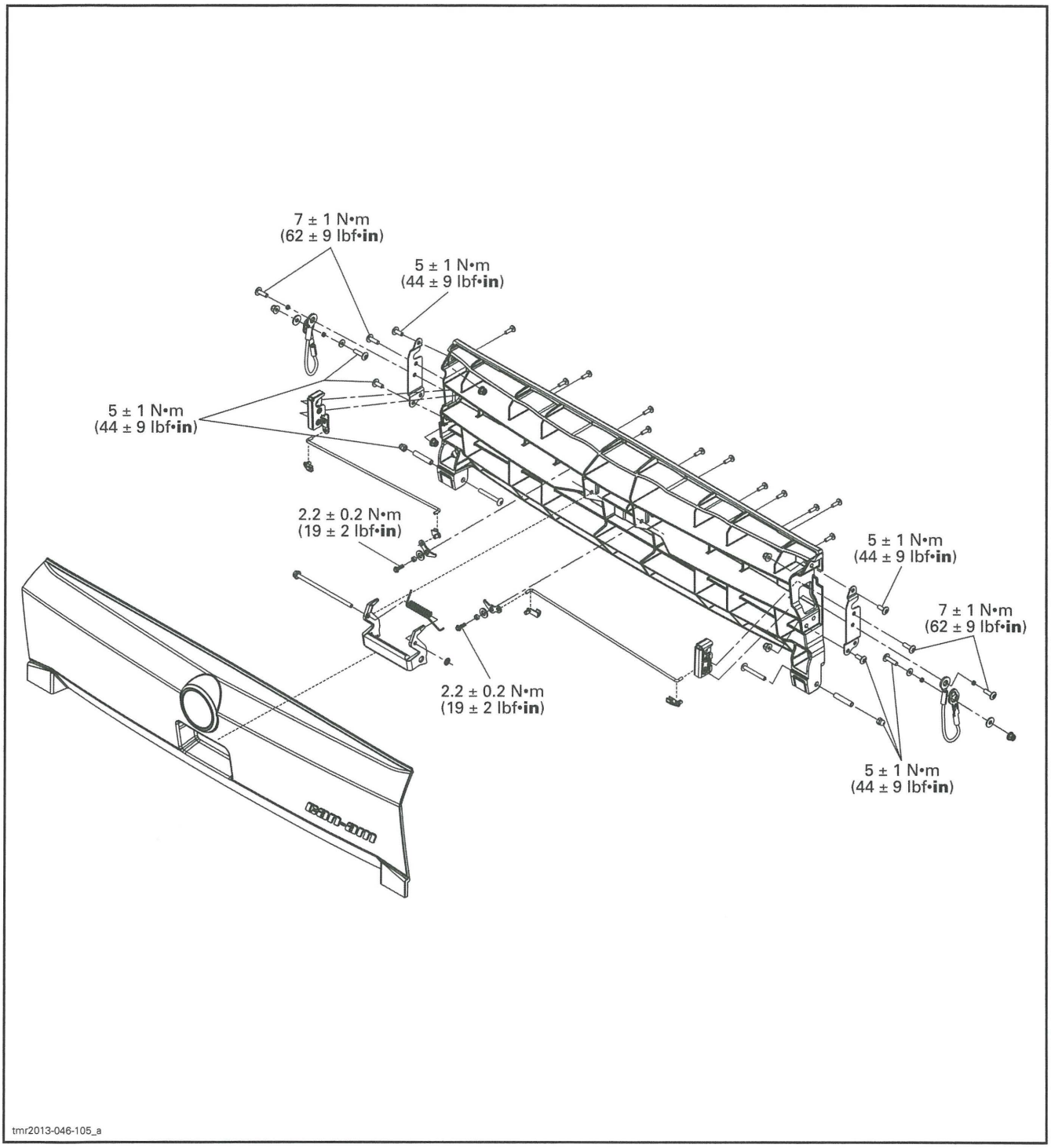

LOWER TAIL GATE

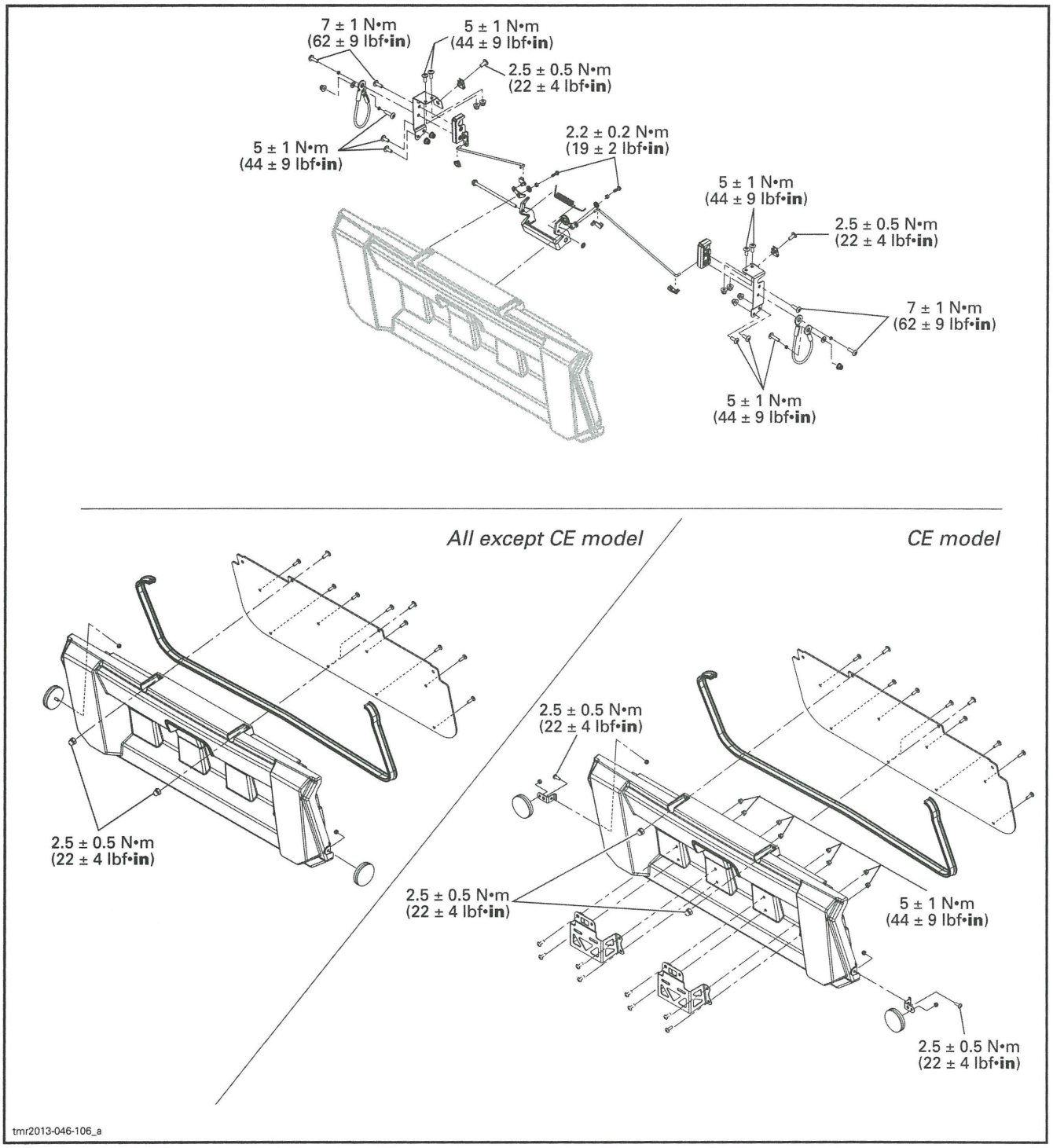

CARGO BOX ACCESSORIES

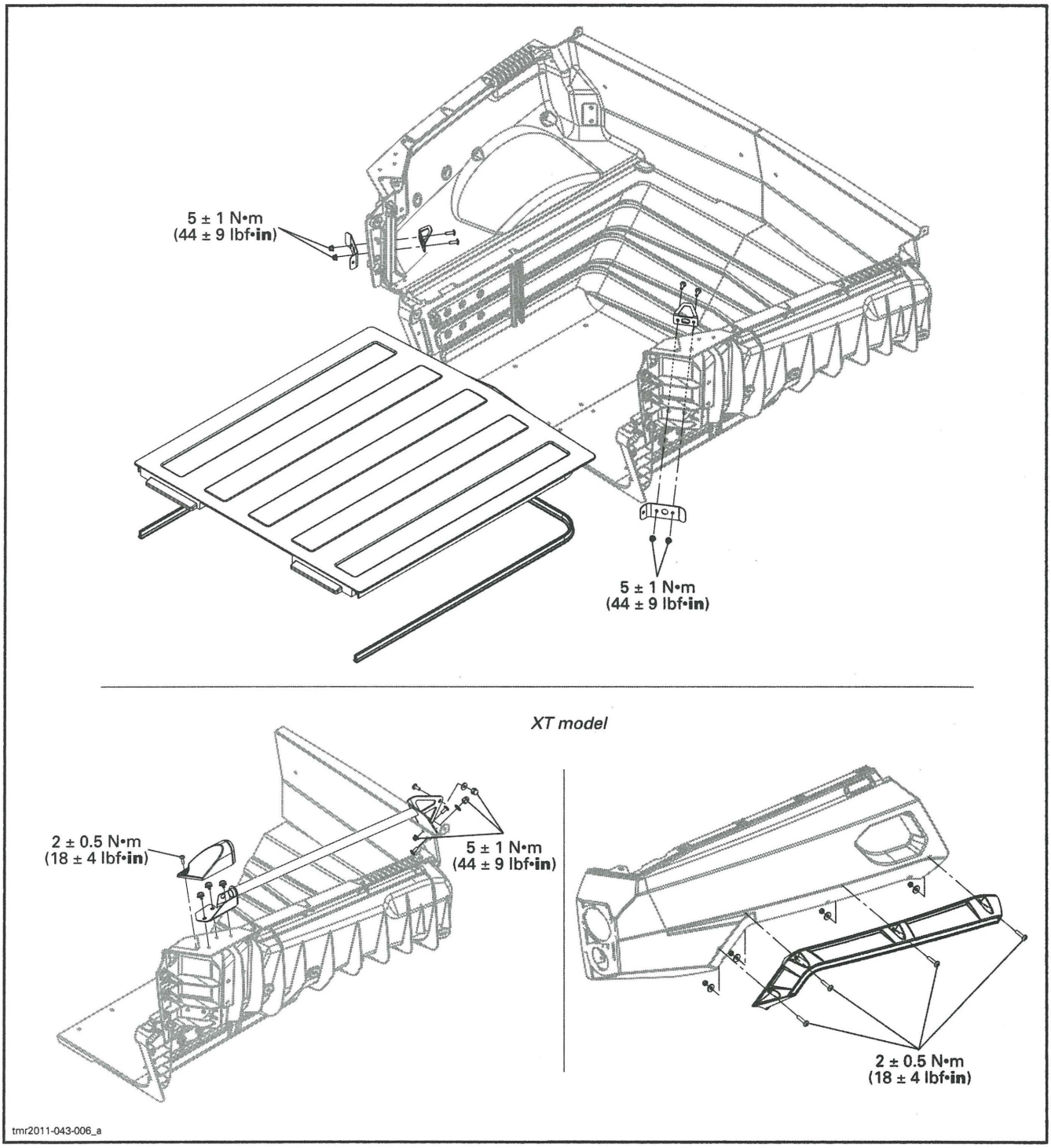

ADJUSTMENT

CARGO BOX ADJUSTMENTS

Cargo Box Alignment

The cargo box is properly aligned when:

- The gap between the cargo box and rear lateral panel is equalled on each side (± 19 mm (3/4 in)).
- Cargo box side and rear lateral panel are flushed. The top of cargo box side may be raised for a maximum of 6 mm (15/64 in) over the top of rear lateral panel.

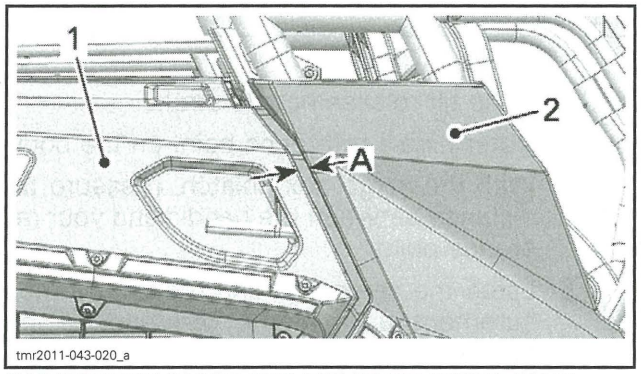

GAP BETWEEN CARGO BOX AND REAR LATERAL PANEL
1. *Cargo box side*
2. *Rear lateral panel*

A. Approximately 19 mm (3/4 in)

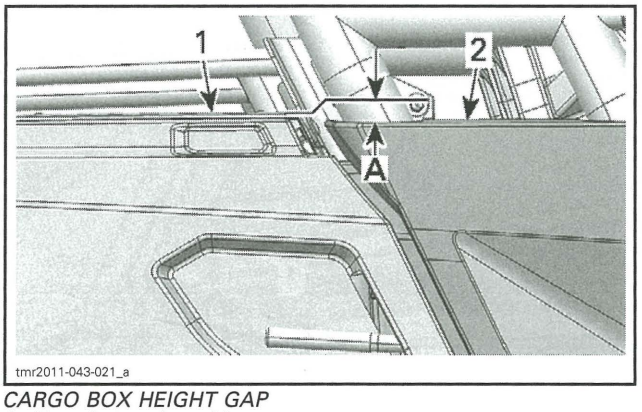

CARGO BOX HEIGHT GAP
1. *Top of cargo box side*
2. *Top of rear lateral panel*

A. Maximum of 6 mm (15/64 in)

If an adjustment is required, proceed as follows:

1. Loosen cargo box pivot point nuts.
2. Remove adjuster bolts securing the cargo box to cargo box support adjuster.

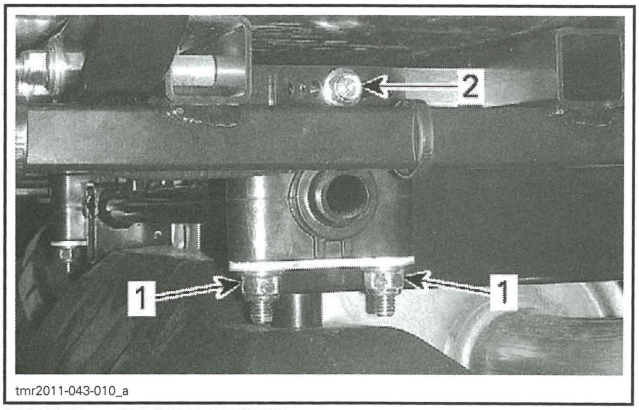

TYPICAL – RH SIDE SHOWN
1. *Cargo box pivot point nuts*
2. *Adjuster bolt*

3. Position cargo box to align it as described above.
4. Reinstall adjuster bolts in corresponding holes.

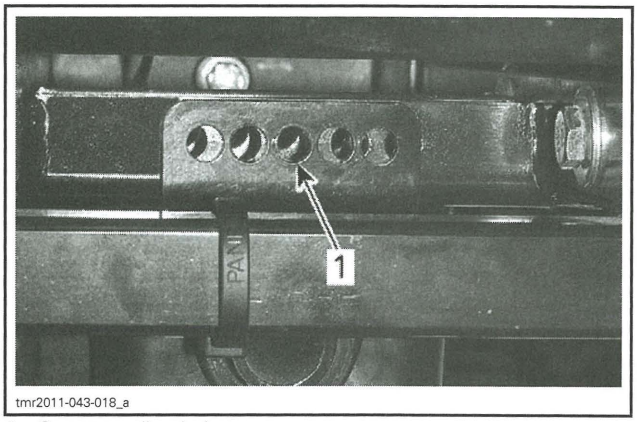

1. *Corresponding holes*

5. Tighten nuts and bolts.

PART	TORQUE
Adjuster bolts	10 N•m ± 2 N•m (89 lbf•**in** ± 18 lbf•**in**)
Cargo box pivot point nuts	24.5 N•m ± 3.5 N•m (18 lbf•ft ± 3 lbf•ft)

6. Verify the cargo box retainer height.

Cargo Box Retainer Height Adjustment

1. Open cargo box.
2. Loosen rubber bumpers.

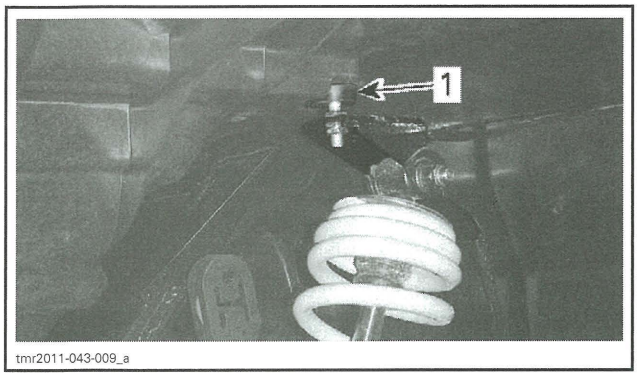

RH SIDE SHOWN
1. Rubber bumper

3. Close the cargo box and check the gap between cargo box retainer and the end of the latch lever.
   3.1 Break torque from cargo box retainer bolts.

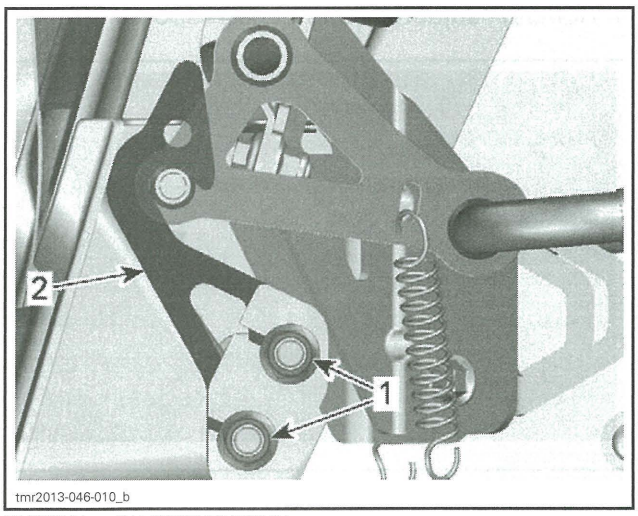

TYPICAL – RH SIDE SHOWN
1. Cargo box retainer nuts
2. Cargo box retainer

   3.2 Using a small hammer, reposition the cargo box retainer. Temporarily retighten bolts.
   3.3 Close the cargo box and check the cargo box retainer gap.

NOTE: No vertical gap is permitted between cargo box retainer and the end of the latch lever.

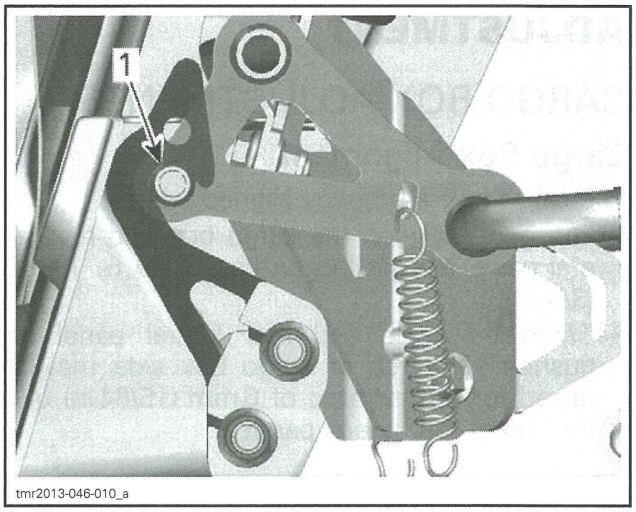

1. No gap here

4. Check the tilt release handle stroke.
   4.1 Determine a reference point on the body.
   4.2 With the cargo box unlatch, measure the distance between the handle and your reference point.
   4.3 Latch the cargo box and repeat the measurement using same reference points (handle and body).
   4.4 The difference between measurements should be approximately 2 mm (.079 in).

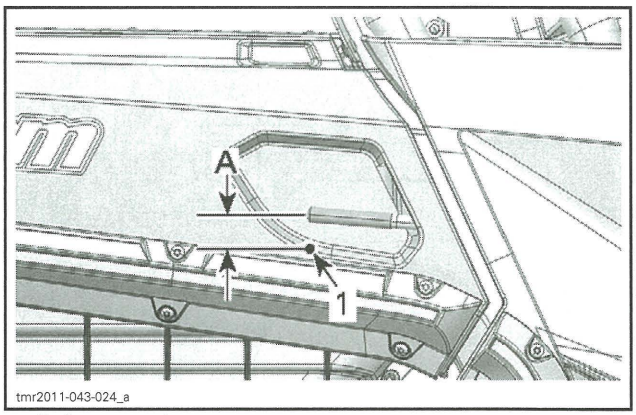

1. Reference point
A. Difference: approximately 2 mm (.079 in)

5. Repeat steps 3 and 4 until cargo box is properly adjusted.
6. Retighten all cargo box retainer bolts.

PART	TORQUE
Cargo box retainer bolts	24.5 N•m ± 3.5 N•m (18 lbf•ft ± 3 lbf•ft)

7. Reposition the rubber bumper against the cargo box without any pressure.

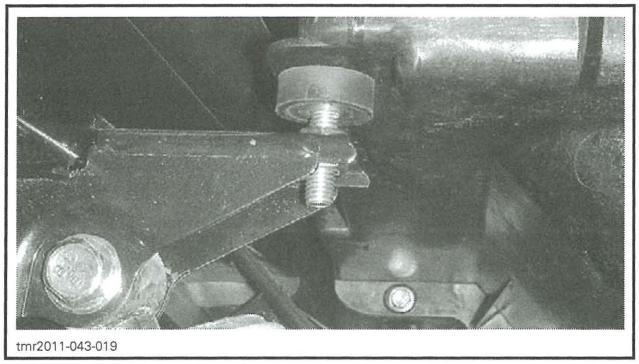
tmr2011-043-019

PROCEDURES

CARGO BOX GAS SHOCK

Cargo Box Gas Shock Replacement

1. Unlock and raise the cargo box.
2. Secure the cargo box with wooden blocks (or an equivalent).
3. Remove the upper and lower gas shock bolts.
4. Remove gas shock from vehicle and install the new one.
5. Remove supports and lower the cargo box.

CARGO BOX

Cargo Box Removal

1. Unlock and raise the cargo box.
2. Unplug the cargo box harness connector.

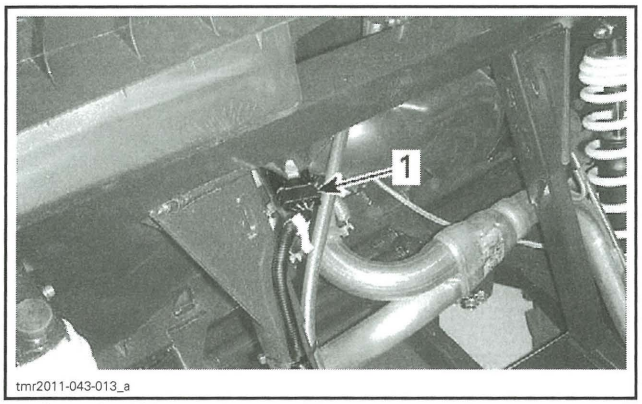

tmr2011-043-013_a

1. Cargo box harness connector

3. From the LH of vehicle, cut all locking ties securing harness to frame.
4. Secure the cargo box with wooden blocks (or an equivalent) and remove the upper gas shock bolt.
5. Remove supports and lower the cargo box.
6. From underneath of cargo box, remove nuts, support plates and halve housings.

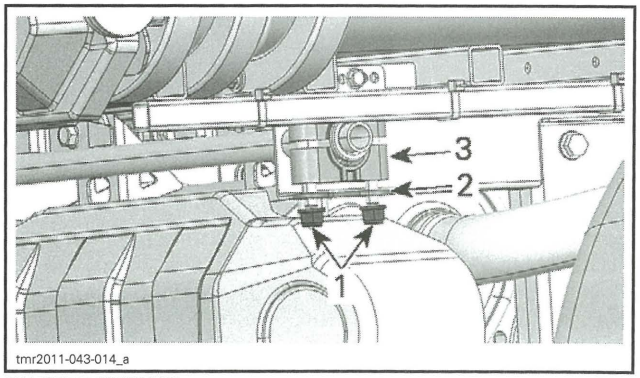

tmr2011-043-014_a

RH SIDE SHOWN
1. Nuts
2. Support plate
3. Half housing

7. Unlock the cargo box.
8. Using a hoist or with the help of another person, remove the cargo box.

⚠ CAUTION To avoid injury or vehicle damages, never handle the cargo box alone.

Cargo Box Installation

The installation is the reverse of the removal procedure. However, pay attention to the following.

If any parts of the locking mechanism have been replaced or loosen, check cargo box adjustments. Refer to *CARGO BOX ADJUSTMENTS*.

FRAME

SERVICE TOOLS – OTHER SUPPLIER

Description	Part Number	Page
BLIND THREADED INSERT INSTALLER	model 9600	449

SERVICE PRODUCTS

Description	Part Number	Page
LOCTITE 243 (BLUE)	293 800 060	448

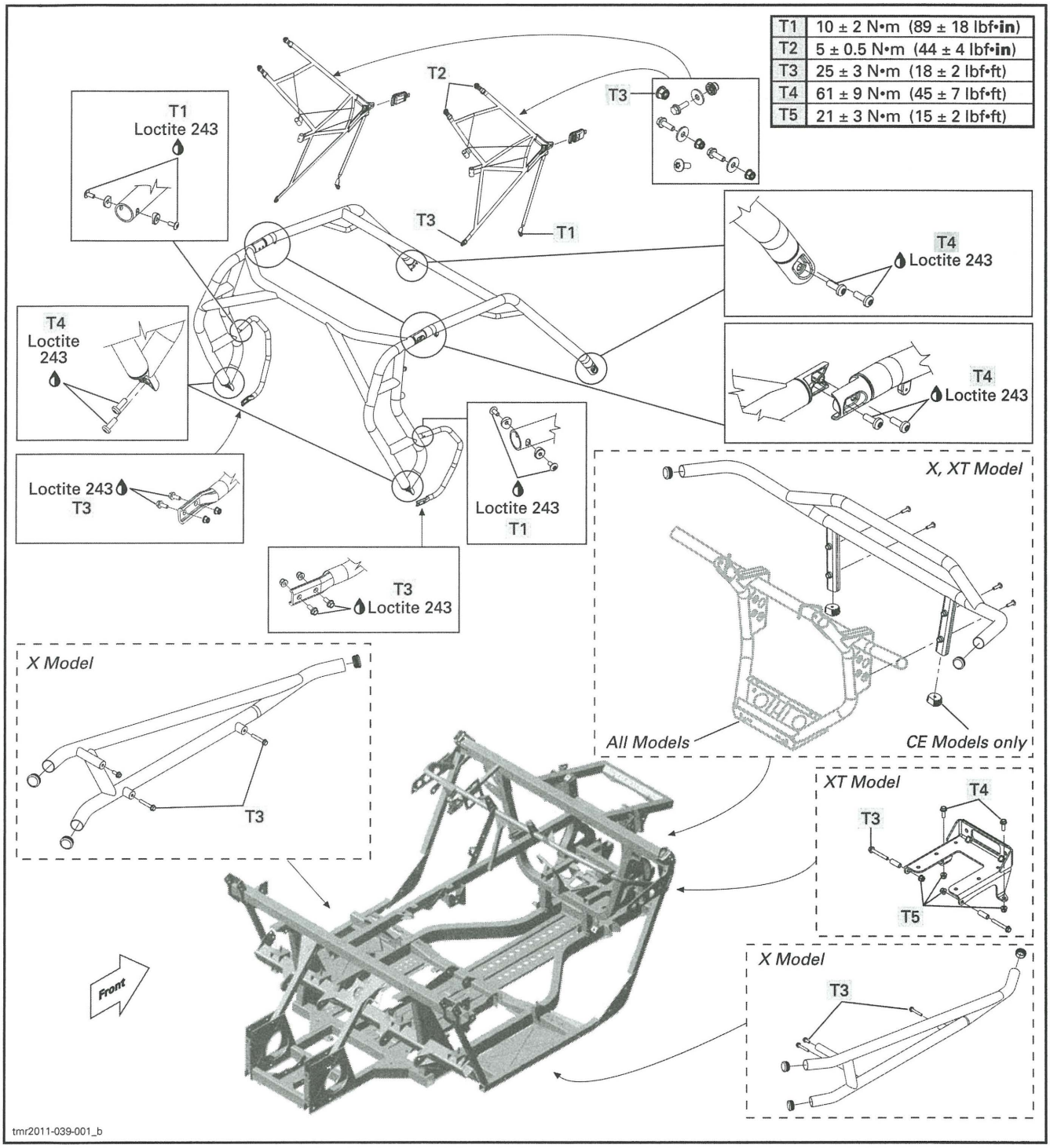
T1 10 ± 2 N•m (89 ± 18 lbf•in)
T2 5 ± 0.5 N•m (44 ± 4 lbf•in)
T3 25 ± 3 N•m (18 ± 2 lbf•ft)
T4 61 ± 9 N•m (45 ± 7 lbf•ft)
T5 21 ± 3 N•m (15 ± 2 lbf•ft)
T1
Loctite 243
T2
T3
T1
T4
Loctite 243
T4
Loctite 243
T4
Loctite 243
Loctite 243
T3
Loctite 243
T1
T3
Loctite 243
X, XT Model
All Models
CE Models only
X Model
T3
XT Model
T4
T3
T5
X Model
T3
Front
tmr2011-039-001_b

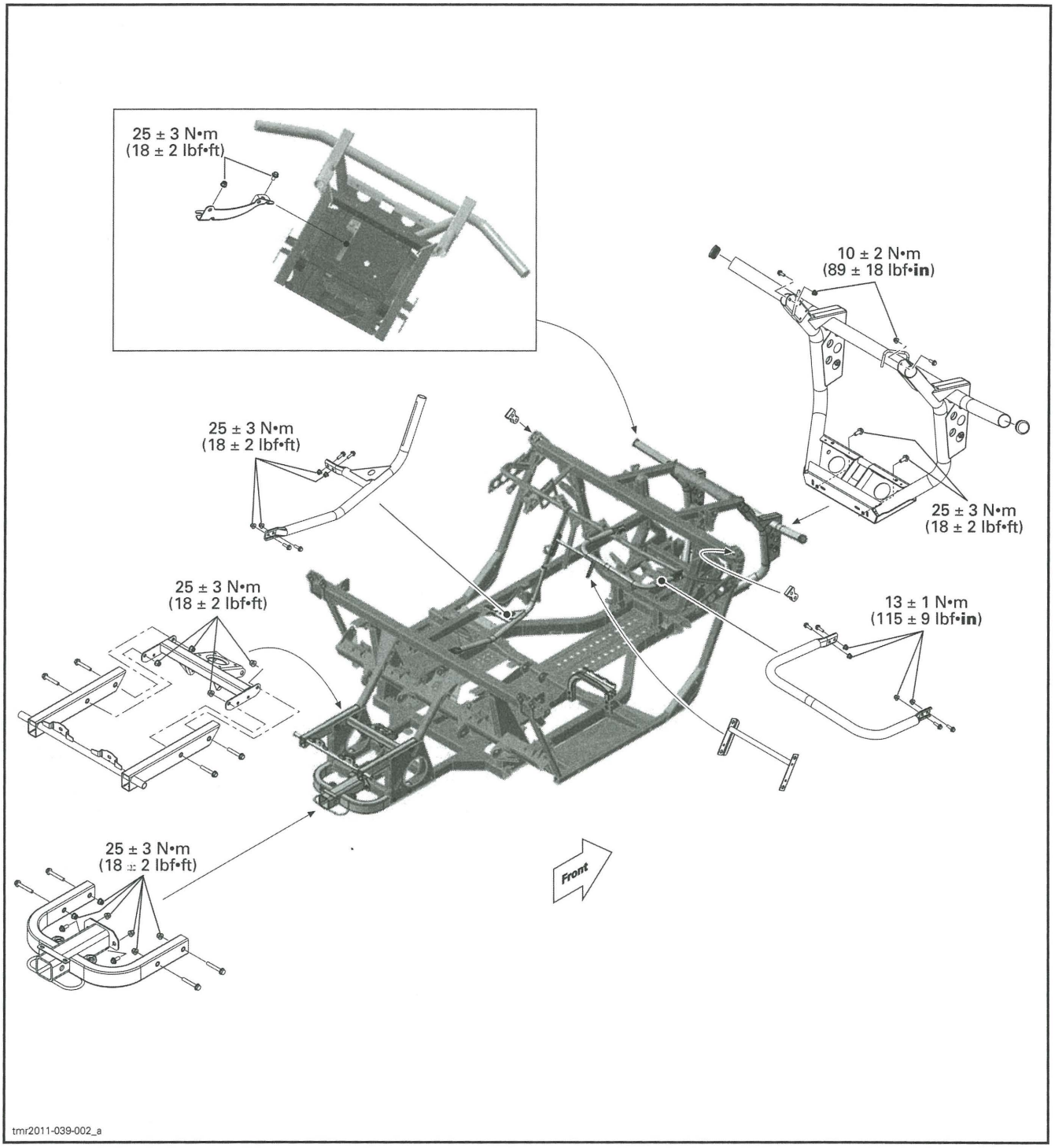
25 ± 3 N•m
(18 ± 2 lbf•ft)
10 ± 2 N•m
(89 ± 18 lbf•in)
25 ± 3 N•m
(18 ± 2 lbf•ft)
25 ± 3 N•m
(18 ± 2 lbf•ft)
25 ± 3 N•m
(18 ± 2 lbf•ft)
13 ± 1 N•m
(115 ± 9 lbf•in)
25 ± 3 N•m
(18 ± 2 lbf•ft)
Front
tmr2011-039-002_a

PROCEDURES

CAGE

⚠ WARNING

Never modify the mounting points of the shoulder nets and the seat belts. If they are found modified or damaged, contact a BRP service representative.

⚠ WARNING

Never drill holes, weld or modify the cage. Since this is an important protection component, any modification might compromise passenger safety.

Cage Inspection

Check cage for bending, cracks, weld damages or any other damage.

⚠ WARNING

Any damaged cage components must be replaced.

Cage Installation

⚠ WARNING

When the cage mounting bolts are removed, they must be replaced with new ones or have their threads cleaned then have LOCTITE 243 (BLUE) (P/N 293 800 060) applied. Ensure to use only 10.9 grade fasteners.

1. Loosely assemble the cage.
2. Position straps on cage tubes as shown.
3. Install lifting straps to the cage. Make a loop in the strap to prevent the cage to slip while manipulating.

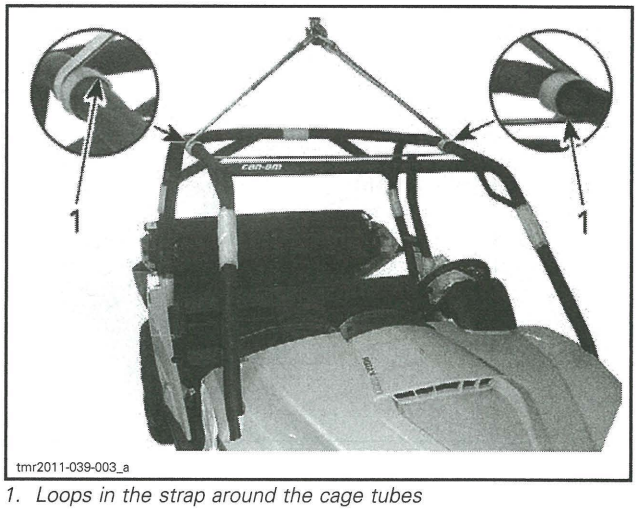

1. Loops in the strap around the cage tubes

4. Using a hoist, lift the cage assembly over the vehicle and carefully position it on vehicle.

⚠ CAUTION To avoid injury or vehicle damages, never handle the cage alone.

NOTE: As an alternate method, 4 persons at each attachment point can position the cage on the vehicle.

5. Insert the rear of cage first. Loosely install screws.

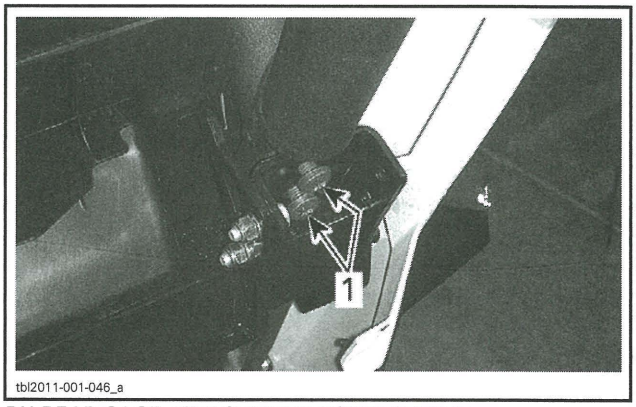

RH REAR CAGE ATTACHMENT POINT SHOWN
1. Mounting screws

6. Insert the front of cage last. Loosely install screws.

NOTE: Installing the top screw first will ease the assembly.

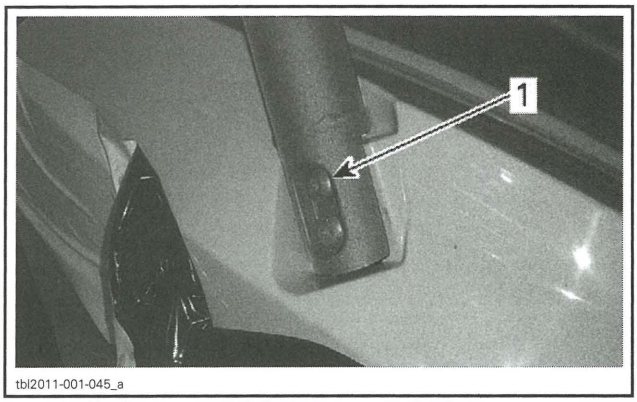

RH FRONT CAGE ATTACHMENT POINT SHOWN
1. Install top screw first

7. Properly torque all the following cage screws to 61 N•m ± 9 N•m (45 lbf•ft ± 7 lbf•ft) in this order.
   - Rear attachment points
   - Joints between front and rear portion of cage
   - Front attachment points.

FRAME

Frame Inspection

Check frame for bending, cracks, weld damages or any other damage. Replace frame as necessary.

Frame Welding

No welding should be done on frame except if mentioned or required on an approved BRP Bulletin.

Frame Insert Replacement

To install a new blind threaded insert, use the following tool: BLIND THREADED INSERT INSTALLER (P/N MODEL 9600) from Textron. See their web site at: **www.textronfasteningsystems.com**.

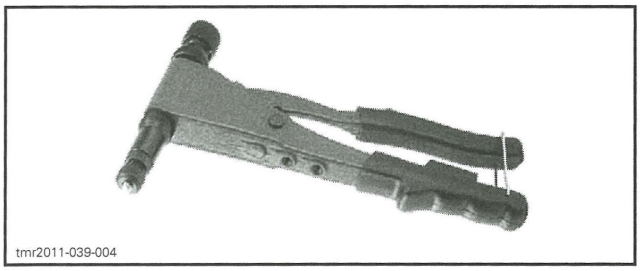

After insert installation, ensure insert can hold the torque applied to the screw it retains. Otherwise, install a new insert.

Frame Replacement

NOTE: Blind threaded inserts are not installed on replacement frames. Make sure to order 14 inserts when replacing frame.

COMMANDER 800R AND 1000

MODEL			COMMANDER 800R/1000
ENGINE			
Engine type		800R	ROTAX® 810, 4-stroke, 2 cylinders (V-twin), liquid cooled
		1000	ROTAX® 1010, 4-stroke, 2 cylinders (V-twin), liquid cooled
Valvetrain			4 valves/cylinder (mechanical adjustment), Single Over Head Camshaft (SOHC) with timing chain
Bore			91 mm (3.58 in)
Stroke		800R	61.5 mm (2.42 in)
		1000	75 mm (2.95 in)
Displacement		800R	799 cm^3 (48.8 in^3)
		1000	976 cm^3 (59.6 in^3)
Compression ratio		800R	10.3:1
		1000	10.5:1
Maximum HP RPM		800R	7250 RPM
		1000	7000 RPM
Exhaust system			Spark arrestor approved by USDA Forest Service
Air filter			Flat corrugated composite fiber
Intake valve opening			5° BTDC
Intake valve closing		800R	45° ABDC
		1000	60° ABDC
Exhaust valve opening		800R	55° BBDC
		1000	65° BBDC
Exhaust valve closing		800R	5° ATDC
		1000	5° BTDC
Valve clearance		Intake	0.06 mm to 0.14 mm (.0024 in to .0055 in)
		Exhaust	0.11 mm to 0.19 mm (.0043 in to .0075 in)
Valve stem diameter	Intake	New	4.966 mm to 4.980 mm (.1955 in to .1961 in)
		Service limit	4.930 mm (.1941 in)
	Exhaust	New	4.956 mm to 4.970 mm (.1951 in to .1957 in)
		Service limit	4.930 mm (.1941 in)
Valve out of round		New	0.005 mm (.0002 in)
		Service limit	0.06 mm (.0024 in)
Valve guide diameter		New	4.998 mm to 5.018 mm (.1968 in to .1976 in)
		Service limit	5.050 mm (.1988 in)
Valve spring free length		New	40.81 mm (1.607 in)
		Service limit	39.00 mm (1.535 in)
Valve seat contact width	Intake	New	1.05 mm to 1.35 mm (.041 in to .053 in)
		Service limit	1.8 mm (.071 in)
	Exhaust	New	1.25 mm to 1.55 mm (.049 in to .061 in)
		Service limit	2 mm (.079 in)

MODEL			COMMANDER 800R/1000
ENGINE (cont'd)			
Rocker arm bore diameter		New	12.036 mm to 12.050 mm (.4739 in to .4744 in)
		Service limit	12.060 mm (.4748 in)
Rocker arm shaft diameter		New	12.000 mm to 12.018 mm (.4724 in to .4731 in)
		Service limit	11.990 mm (.472 in)
Piston diameter		New	90.950 mm to 90.966 mm (3.5807 in to 3.5813 in)
		Service limit	90.900 mm (3.5787 in)
Piston/cylinder clearance		New	0.027 mm to 0.057 mm (.0011 in to .0022 in)
		Service limit	0.100 mm (.0039 in)
Piston ring type		1st	Upper compression ring, rectangular
		2nd	Lower compression ring, tapered face
		3rd	Oil scraper ring
Ring end gap	Rectangular	New	0.20 mm to 0.40 mm (.008 in to .016 in)
	Tapered face		0.20 mm to 0.40 mm (.008 in to .016 in)
	Oil scraper ring		0.20 mm to 0.70 mm (.008 in to .028 in)
	Rectangular	Service limit	0.60 mm (.024 in)
	Tapered face		0.70 mm (.028 in)
	Oil scraper ring		1.00 mm (.039 in)
Ring/piston groove clearance	Rectangular	New	0.03 mm to 0.07 mm (.0012 in to .0028 in)
	Tapered face		0.02 mm to 0.06 mm (.0008 in to .0024 in)
	Oil scraper ring		0.01 mm to 0.18 mm (.0004 in to .0071 in)
	Rectangular	Service limit	0.15 mm (.0059 in)
	Tapered face		0.15 mm (.0059 in)
	Oil scraper ring		0.25 mm (.0098 in)
Cylinder bore		New	90.993 mm to 91.007 mm (3.5824 in to 3.583 in)
Cylinder taper		Maximum New	0.038 mm (.0015 in)
		Service limit	0.090 mm (.0035 in)
Cylinder out of round		Maximum New	0.015 mm (.0006 in)
		Service limit	0.020 mm (.0008 in)
Camshaft main bearing journal	Timing chain side	New	34.959 mm to 34.975 mm (1.3763 in to 1.377 in)
		Service limit	34.950 mm (1.376 in)
	Spark plug side	New	21.959 mm to 21.980 mm (.8645 in to .8654 in)
		Service limit	21.950 mm (.8642 in)
Camshaft main bearing journal bore	Timing chain side	New	35.000 mm to 35.025 mm (1.378 in to 1.3789 in)
		Service limit	35.040 mm (1.3795 in)
	Spark plug side	New	22.000 mm to 22.021 mm (.8661 in to .867 in)
		Wear limit	22.040 mm (.8677 in)

MODEL				COMMANDER 800R/1000
ENGINE (cont'd)				
Camshaft lobe	Intake valve	800R	New	32.890 mm to 33.090 mm (1.2949 in to 1.3028 in)
			Service limit	32.870 mm (1.2941 in)
		1000	New	32.960 mm to 33.160 mm (1.2976 in to 1.3055 in)
			Service limit	32.940 mm (1.2969 in)
	Exhaust valve	800R	New	32.950 mm to 33.150 mm (1.2972 in to 1.3051 in)
			Service limit	32.930 mm (1.2965 in)
		1000	New	32.860 mm to 33.060 mm (1.2937 in to 1.3016 in)
			Service limit	32.840 mm (1.2929 in)
Crankshaft main bearing journal diameter (MAG/PTO side)			New	42.016 mm to 42.040 mm (1.6542 in to 1.6551 in)
			Service limit	42.000 mm (1.6535 in)
Crankshaft radial play (MAG/PTO side)			Service limit	0.07 mm (.0028 in)
Crankshaft bearing journal diameter (in PTO cover)			New	34.004 mm to 34.020 mm (1.3387 in to 1.3394 in)
			Service limit	33.998 mm (1.3385 in)
Crankshaft radial play (PTO cover bearing)			Service limit	0.10 mm (.0039 in)
Crankshaft axial play			New	0.200 mm to 0.500 mm (.0079 in to .0197 in)
			Service limit	0.600 mm (.0236 in)
Crankshaft pin diameter		800R	New	40.009 mm to 40.025 mm (1.5752 in to 1.5758 in)
			Service limit	39.990 mm (1.5744 in)
		1000	New	41.986 mm to 42.010 mm (1.653 in to 1.6539 in)
			Service limit	41.967 mm (1.6522 in)
Crankshaft deflection		MAG/ PTO side	New	0.050 mm (.002 in)
Crankcase plain bearing		MAG/ PTO side	Service limit	42.100 mm (1.6575 in)
PTO cover plain bearing			Service limit	34.120 mm (1.3433 in)
Connecting rod big end diameter		800R	Service limit	40.100 mm (1.579 in)
		1000		42.100 mm (1.6575 in)
Connecting rod big end radial play			Service limit	0.09 mm (.0035 in)
Connecting rod big end axial play		800R	New	0.200 mm to 0.500 mm (.008 in to .02 in)
			Service limit	0.600 mm (.024 in)
		1000	New	0.250 mm to 0.550 mm (.0098 in to .0217 in)
			Service limit	0.600 mm (.024 in)
Connecting rod small end diameter		800R	New	20.010 mm to 20.020 mm (.7878 in to .7882 in)
			Service limit	20.060 mm (.7898 in)
		1000	New	22.010 mm to 22.020 mm (.8665 in to .8669 in)
			Service limit	22.050 mm (.8681 in)
Piston pin diameter		800R	New	19.996 mm to 20.000 mm (.7872 in to .7874 in)
			Service limit	19.980 mm (786.614 in)
		1000	New	21.996 mm to 22.000 mm (865.984 in to 866.142 in)
			Service limit	21.980 mm (.8654 in)
Connecting rod/piston pin clearance (radial play)			Service limit	0.080 mm (.0031 in)

MODEL			COMMANDER 800R/1000
LUBRICATION SYSTEM			
Type			Wet sump. Replaceable cartridge oil filter
Oil filter			BRP Rotax paper type, replaceable
Engine oil pressure		Minimum	300 kPa (44 PSI) at 6000 RPM
Engine oil	Capacity (oil change with filter)		2.2 L (2.3 qt (U.S. liq.))
	Recommended		For the summer season, use XPS synthetic blend oil (summer grade) (P/N 293 600 121). For the winter season, use XPS synthetic oil (winter grade) (P/N 293 600 112). If not available, use a 5W 40 motor oil that meets the requirements for API service classification SM, SL or SJ
COOLING SYSTEM			
Coolant	Type		Ethyl glycol/water mix (50% coolant, 50% water). Use premixed coolant sold by BRP (P/N 219 700 362) or coolant specifically designed for aluminum engines
	Capacity	800R	3.9 L (1 U.S. gal.)
		1000	4.3 L (1.1 U.S. gal.)
Thermostat	Starts to open		65°C (149°F)
	Fully open	800R	75°C (167°F)
		1000	88°C (190°F)
Radiator cap opening pressure			110 kPa (16 PSI)
TRANSMISSION			
Type			CVT (Continuously Variable Transmission)
Engagement RPM			1750 ± 100 RPM
Drive belt width		Service limit	30.00 mm (1.181 in)
Governor cup roller outer diameter		New	13.70 mm to 13.80 mm (.539 in to .543 in)
		Service limit	13.20 mm (.52 in)
Governor cup roller inner diameter		New	8.05 mm to 8.15 mm (.317 in to .321 in)
		Service limit	9.00 mm (.354 in)
Centrifugal lever pivot bolt diameter		New	6.078 mm to 6.100 mm (.239 in to .24 in)
		Service limit	6.000 mm (.236 in)
Centrifugal lever bore diameter		New	6.035 mm to 6.078 mm (.2376 in to .2393 in)
		Service limit	6.200 mm (.244 in)
Drive pulley sliding half centrifugal lever pivot bolt bore diameter		New	6.113 mm to 6.171 mm (.241 in to .243 in)
		Service limit	6.300 mm (.248 in)
Drive pulley sliding half large bushing		New	55.000 mm to 55.040 mm (2.165 in to 2.167 in)
		Service limit	55.200 mm (2.173 in)
Drive pulley sliding half small bushing		New	32.000 mm to 32.040 mm (1.26 in to 1.261 in)
		Service limit	32.200 mm (1.268 in)
Drive pulley spring free length	800R	Service limit	85 mm (3.346 in)
	1000		105 mm (4.134 in)
Drive pulley spring free squareness		Service limit	4 mm (.157 in)
Spring sleeve length		New	9.2 mm to 9.4 mm (.362 in to .37 in)
		Service limit	9.0 mm (.354 in)

MODEL			COMMANDER 800R/1000
TRANSMISSION (suite)			
Driven pulley sliding half bushing		New	30.060 mm to 30.100 mm (1.183 in to 1.185 in)
		Service limit	30.200 mm (1.189 in)
Driven pulley sliding fixed bushing		New	30.060 mm to 30.100 mm (1.183 in to 1.185 in)
		Service limit	30.200 mm (1.189 in)
Torque gear on driven pulley		Service limit	7.500 mm (.295 in)
Driven pulley spring free length		Service limit	125 mm (4.921 in)
Driven pulley spring free squareness		Service limit	3.8 mm (.15 in)
GEARBOX			
Type			Dual range (HI-LO) with park, neutral and reverse
Gear ratios		Angle drive subtransmission	37/15 = 2.467
		Intermediate	45/44 = 1.023
		High	36/27 = 1.333
		Low	44/19 = 2.316
		Reverse	34/12 =2.833
Overall gear ratios		High	3.364
		Low	5.842
		Reverse	7.148
Gearbox oil		Capacity	450 ml (15 U.S. oz)
		Recommended	XPS synthetic gear oil (P/N 293 600 140) or a 75W140 API GL-5 synthetic gear oil
Coupling sleeve groove width		New	5.25 mm to 5.35 mm (.207 in to .211 in)
		Service limit	5.50 mm (.217 in)
Coupling fork claw thickness		New	4.95 mm to 5.05 mm (.195 in to .199 in)
		Service limit	4.80 mm (.189 in)
Shift fork claw thickness (high, low and reverse gear shift fork)		New	5.10 mm to 5.20 mm (.201 in to .205 in)
		Service limit	5.00 mm (.197 in)
Width of shift fork engagement groove		New	5.30 mm to 5.40 mm (.209 in to .213 in)
		Service limit	5.50 mm (.217 in)
Diameter free pinions		New	29.000 mm to 29.013 mm (1.1417 in to 1.1422 in)
		Service limit	29.015 mm (1.1423 in)
Intermediate gear shaft		New	24.987 mm to 25.000 mm (.9837 in to .9843 in)
		Service limit	24.977 mm (.983 in)
Countershaft	MAG side	New	19.977 mm to 19.990 mm (.7865 in to .787 in)
		Service limit	19.973 mm (.7863 in)
	CVT side	New	24.977 mm to 24.990 mm (.9833 in to .9839 in)
		Service limit	24.970 mm (.9831 in)
Main shaft	Free pinion bearing	New	24.987 mm to 25.000 mm (.9837 in to .9843 in)
		Service limit	24.984 mm (.9836 in)
	Bearing journal MAG/CVT side	New	16.980 mm to 16.991 mm (.6685 in to .6689 in)
		Service limit	16.976 mm (.6683 in)

Section 08 TECHNICAL SPECIFICATIONS
Subsection 01 (COMMANDER 800R AND 1000)

MODEL			COMMANDER 800R/1000
ELECTRICAL SYSTEM			
Magneto generator output			650 W @ 6000 RPM
Stator resistance (20°C (68°F))			0.15 to 0.30 Ω
Ignition system type			IDI (Inductive Discharge Ignition)
Ignition timing			Not adjustable
Spark plug		Quantity	2
		Make and type	NGK DCPR8E
		Gap	0.7 mm to 0.8 mm (.028 in to .031 in)
Engine RPM limiter setting		Forward	8000 RPM
		Reverse	20 km/h to 25 km/h (12 MPH to 16 MPH) (8000 RPM with Override)
Battery		Type	Maintenance free
		Voltage	12 volts
		Nominal rating	18 A•h
		Power starter output	0.7 KW
Headlight		High	2 x 65 W
		Low	2 x 55 W
Taillight			2 x 8/27 W
Turn signals (CE)			10 W
Position light			LED, 0.7 V approximately (each)
Fuses	– Main	MF1	40 A
	– Main accessories	MF2	50 A
	– DPS – ACS (LTD models only)	F3	50 A
	– Brake lights switch – Gauge – Taillights – Brake relay	F4	10 A
	– Ignition coils – Fuel injectors – Speed sensor	F5	7.5 A
	– Engine control module (ECM)	F6	5 A
	– Winch – 4WD actuator	F7	5 A
	– Gauge – Ignition switch – Clock – Starter solenoid	F8	5 A
	– Fan motor	F9	25 A
	– European component	F10	5 A
	– Lights relay	F11	30 A

MODEL			COMMANDER 800R/1000
ELECTRICAL SYSTEM (cont'd)			
Fuses (cont'd)	– Connectors (DC3 and DC4) – 12 V power outlet – Communication connector	F12	15 A
	– Relays coils (R1 and R3)	F13	5 A
	– Accessories (DC5 and DC6)	F14	15 A
	– Fuel pump	F15	5 A
FUEL SYSTEM			
Fuel delivery		Type	Electronic Fuel Injection (EFI), 54 mm throttle body with iTC (Intelligent Throttle Control), 1 injector per cylinder
Fuel pump		Type	Electrical (in fuel tank)
		Operating pressure	350 kPa (51 PSI)
Idle speed			1250 RPM ± 100 (not adjustable)
Fuel	Type		Regular unleaded gasoline
	Octane rating	Inside North America	87 (R+M)/2 or higher
		Outside North America	92 RON or higher
Fuel tank capacity			38 L (10 U.S. gal.)
Fuel remaining when low fuel light turns ON			± 12 L (3.2 U.S. gal.)
DRIVE SYSTEM			
Front drive			Visco-lok† front differential
Front drive ratio			3.6:1
Rear drive			Shaft driven/spool
Rear drive ratio			3.6:1
Front differential oil		Capacity	500 ml (17 U.S. oz)
		Recommended	XPS synthetic gear oil (P/N 293 600 043) or synthetic gear oil 75W90 API GL-5
Rear final drive oil		Capacity	350 ml (11.8 U.S. oz)
		Recommended	XPS synthetic gear oil (P/N 293 600 140) or synthetic gear oil 75W140 API GL-5
CV joint grease			CV joint grease (P/N 293 550 019)
Propeller shaft grease			Hi-temp bearing grease NLGI-2 or an equivalent
STEERING			
Type			Rack and pinion
Assisted steering system	All except standard models		Dynamic Power Steering (DPS)
Steering wheel			Adjustable tilt steering
Turning radius			244 cm (96 in)
Total toe (vehicle on ground)			0 mm ± 4 mm (0 in ± .157 in)
Camber angle (vehicle on ground)			0.7° positive
Tie-rod maximum length unengaged threads			32 mm (1.26 in)

MODEL			COMMANDER 800R/1000
FRONT SUSPENSION			
Suspension type		All except LTD	Double suspension-arm with dive-control geometry
		LTD	Double suspension-arm with div econtrol geometry with ACS (Air Controlled Suspension)
Suspension travel			254 mm (10 in)
Shock absorber	Qty		2
	Type	Standard XT	Oil
		X	HPG shock with remote reservoir. Dual speed compression damping and rebound damping adjustments
		LTD	HPG shock with remote reservoir. Compression damping (low speed) and air pressure adjustments
Spring free length		Standard DPS XT	355.6 mm (14 in)
		X	350 mm (13.78 in)
		LTD	358.7 mm (14.12 in)
Preload adjustment type		Standard DPS XT	5 positions cam
		X	Threaded spring retainer
		LTD	Variable spring preload according to air pressure
REAR SUSPENSION			
Suspension type		All except LTD	Torsional Trailing arm Independant (TTI) with external sway bar
		LTD	Torsional Trailing arm Independant (TTI) with external sway bar and ACS (Air Controlled Suspension)
Suspension travel			254 mm (10 in)
Shock absorber	Qty		2
	Type	Standard DPS XT	Oil
		X	HPG shock with remote reservoir. Dual speed compression damping and rebound damping adjustments
		LTD	HPG shock with remote reservoir. Compression damping (low speed) and air pressure adjustments
Spring free length		Standard DPS XT	358 mm (14.09 in)
		X	373 mm (14.69 in)
		LTD	355.6 mm (14 in)
Preload adjustment type		Standard DPS XT	5 positions cam
		X	Threaded spring retainer
		LTD	Variable spring preload according to air pressure

MODEL			COMMANDER 800R/1000
BRAKES			
Front brake		Qty	2
		Type	214 mm ventilated disc brakes with hydraulic twin-piston calipers
Rear brake		Qty	1
		Type	214 mm ventilated disc brake with hydraulic twin-piston caliper
Brake fluid		Capacity	250 ml (8.5 U.S. oz)
		Type	DOT 4
Caliper			Floating
Brake pad material			Metallic
Minimum brake pad thickness			1 mm (.04 in)
Minimum brake disc thickness			4.3 mm (.169 in)
Maximum brake disc warpage			0.2 mm (.01 in)
TIRE			
Pressure		Front	Maximum: 83 kPa (12 PSI) Minimum: 69 kPa (10 PSI)
		Rear	Maximum: 152 kPa (22 PSI) Minimum: 83 kPa (12 PSI)
Minimum tire thread depth			3 mm (.118 in)
Size	Front	Standard	27 x 9 x 12 (in)
		DPS	27 x 9 x 14 (in)
		X	27 x 9 x 12 (in)
		XT	27 x 9 x 14 (in)
		LTD	27 x 9 x 14 (in)
	Rear	Standard	27 x 11 x 12 (in)
		DPS	27 x 11 x 14 (in)
		X	27 x 11 x 12 (in)
		XT	27 x 11 x 14 (in)
		LTD	27 x 11 x 14 (in)

MODEL			COMMANDER 800R/1000
WHEELS			
Type		Standard	Steel
		DPS	Cast Aluminum
		X	Aluminum beadlock wheels
		XT	Cast Aluminum
		LTD	Cast Aluminum
Rim size	Front	Standard	12 x 6 (in)
		DPS	14 x 7 (in)
		X	12 x 6 (in)
		XT	14 x 7 (in)
		LTD	14 x 7 (in)
	Rear	Standard	12 x 8 (in)
		DPS	14 x 8.5 (in)
		X	12 x 8 (in)
		XT	14 x 8.5 (in)
		LTD	14 x 8.5 (in)
Wheel nuts torque			100 N•m ± 10 N•m (74 lbf•ft ± 7 lbf•ft)
CHASSIS			
Cage type			50 mm (2 in) diameter, high strength steel, ROPS-approved cage
Hitch support			50.8 mm (2 in) x 50.8 mm (2 in)
DIMENSION			
Overall length		Standard DPS X LTD	300.4 cm (118.3 in)
		XT	304.8 cm (120 in)
Overall width		Standard DPS X	1 490 mm (58.7 in)
		XT LTD	1 587.5 mm (62.5 in)
Overall height			182.9 cm (72 in)
Wheel base			192.4 cm (75.7 in)
Wheel track		Front	125.7 cm (49.5 in)
		Rear	121.9 cm (48 in)
Ground clearance			27.9 cm (11 in)

MODEL			COMMANDER 800R/1000
WEIGHT AND LOADING CAPACITY			
Dry weight		Standard	593 kg (1,307 lb)
		DPS	600 kg (1,323 lb)
		X	633 kg (1,396 lb)
		XT models	646 kg (1,424 lb)
		LTD	686 kg (1,512 lb)
Weight distribution	Front/rear	Standard DPS	44/56
		X XT models LTD	46/54
Cargo box capacity		Total (upper + lower)	272 kg (600 lb)
		Upper	181 kg (400 lb)
		Lower	272 kg (600 lb)
Total vehicle load allowed (including driver, passenger, all other loads and added accessories)			363 kg (800 lb)
Gross vehicle weight rating		Standard	990 kg (2,183 lb)
		DPS X XT LTD	1 026 kg (2,262 lb)
Towing capacity		Except CE version	680 kg (1,500 lb)
		CE version	270 kg (595 lb)
Tongue capacity			68 kg (150 lb)

WIRING DIAGRAM INFORMATION

GENERAL

WIRING DIAGRAM LOCATION

The wiring diagrams are stored in the back cover pocket.

WIRING DIAGRAM CODES

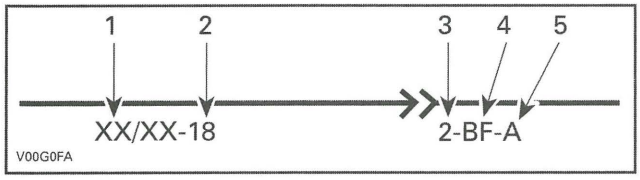

1. *Wire colors*
2. *Wire gauge*
3. *Connector housing area*
4. *Connector identification*
5. *Wire location in connector*

Wire Colors

It identifies the color of a wire. When a 2-color scheme is used, the first color is the main color while the second color is the tracer color.

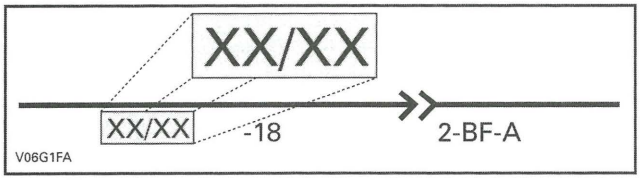

THE SHADED PART INDICATES THE WIRE COLOR

Example: YL/BK is a YELLOW wire with a BLACK stripe.

Wire Gauge

The number after wire color indicates the gauge of a wire.

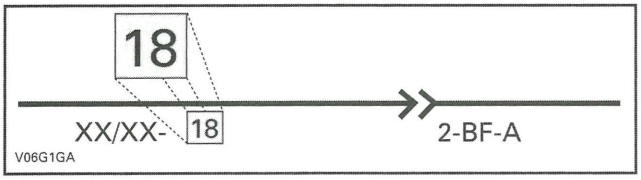

THE SHADED PART INDICATES THE WIRE GAUGE

Example: The number that follows the wire color indicates the wire size used, in this case 18 gauge wire.

Connector Housing Area

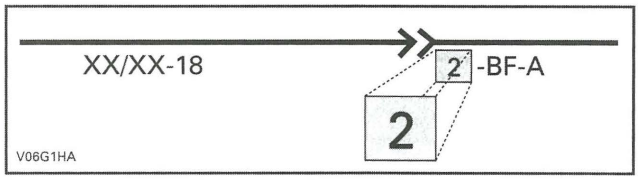

The first number in the connector/pin contact number represents the area in the vehicle where the connector is located.

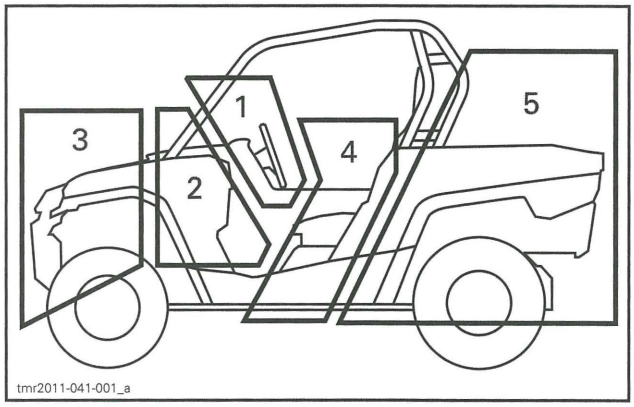

AREA	LOCATION
1	Steering, dashboard and upper console area
2	Under dashboard and front bulkhead area
3	Front of vehicle
4	Engine, seat and lower console area
5	Rear of vehicle

Connector Identification

The letters in the middle of the connector/pin contact number Indicates the connector's function. If there are many connectors in the same area, this helps to identify which wire is in which connector.

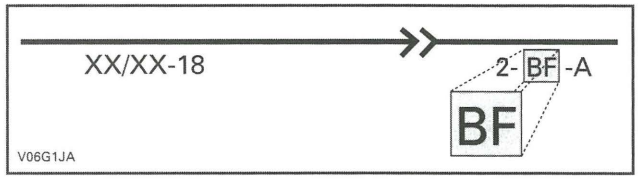

THE SHADED PART INDICATES A CONNECTOR

Wire Location in Connector

This is the wire position in the connector. The number or letter given refers to the physical identification stamped or molded on the connector.

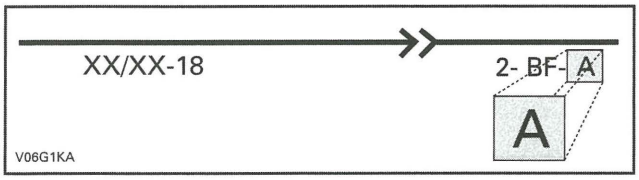

THE SHADED PART INDICATES THE CONNECTOR LOCATION IN HOUSING

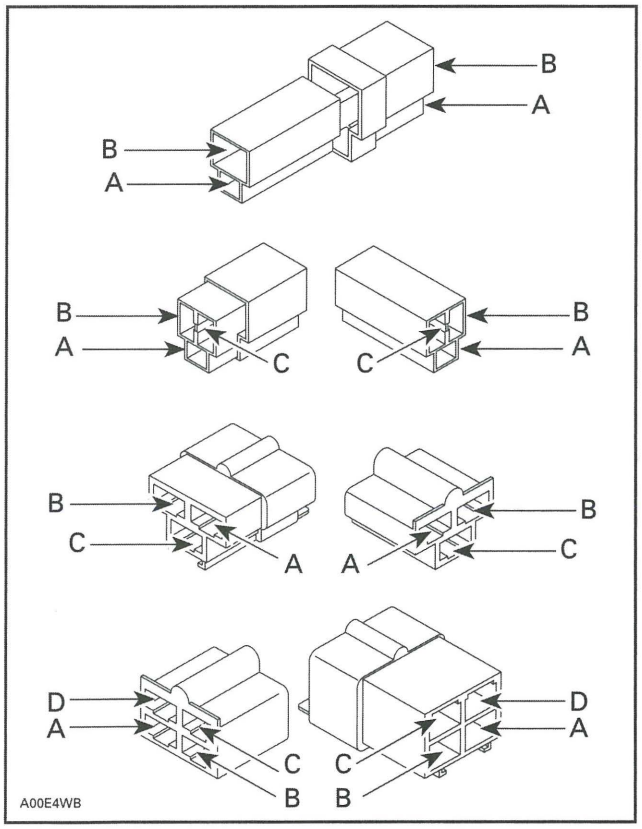

TYPICAL

COMMANDER 2013

DPS SYSTEM

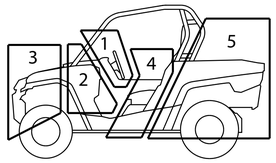

TERMINAL IDENTIFICATION						
	NAME	ZONE-	CONNECTOR NAME-		TERMINAL	
EX:	CI	1	-	CI	-	15
EX:	CV	4	-	CV	-	A
EX:	ME	2	-	ME		

AWG	MAX. CURRENT	MAX. FUSE CURRENT	MAX. WATT
# 6	100 amps	125 amps	1450 watts
# 8	65 amps	80 amps	930 watts
# 10	40 amps	50 amps	580 watts
# 12	25 amps	30 amps	365 watts
# 14	16 amps	20 amps	230 watts
# 16	10 amps	15 amps	145 watts
# 18	6 amps	7.5 amps	85 watts
* AT	50°C MAX		

ZONE #	ZONE DESCRIPTION
1	STEERING AREA
2	MODULE AREA
3	FRONT OF VEHICLE
4	ENGINE AREA
5	REAR OF VEHICLE

	WELDED JOINT
	SHRINKED JOINT
	CROSSED WIRE
	WIRE BUS
	SIMPLE CONDUCTOR WIRE
	FEMALE TERMINAL
	MALE TERMINAL
	STEEL LINK (FRAME)
	TERMINAL

	FRAME GROUND
	EGINE GROUND
	PHILLIPS SCREW
	NUT CONNECTION
	SPLICE CONNECTION
	COMPONENT CONNECTION
	SECTION OF MODULE
	SLOTTED SCREW
	OPTIONAL

COLOR CODE	
BE	BEIGE
BK	BLACK
BU	BLUE
BR	BROWN
GN	GREEN
GY	GREY
OR	ORANGE
RD	RED
VI	VIOLET
WH	WHITE
YL	YELLOW
PK	PINK
LT BU	LIGHT BLUE

JT RD/GY

RD/GY-12 RD/GN-12 RD/pk-12

PF2 PF2 PF2
(1/3)(2/3)(3/3)
MAIN FUSE (F1) 40 A
DPS FUSE (F3) 40 A

PF2-A PF2-B PF2-C

PF2-1

RD-12

HIC-8

JT OR/GN

RD/GY-14 RD/GY-14 OR/GN-14

PF1
MAIN RELAY (R2)

OR/BU-18 RD/BE-14

PF1
RELAYS SPEEDO FUSE (F4) 10 A

RD/BE-14

FOR SPECIFIC PIN POSITION, REFER TO GENERAL SYSTEM DIAGRAM

RD/GY-16

OR/GN-18

CI
SPEEDOMETER & PILOT LAMPS

1-CI-17

P

RD FUEL

YL ENGINE

YL 4WD

BU HI BEAM

1-CI-21 1-CI-4 1-CI-9 1-CI-18 1-CI-7 1-CI-20 1-CI-5

VI/PK-18 BR/PK-18 WH/BE-18 WH/BK-18 BK/BE-18 BK-18 BU-18 OR/GN RD/PK

JT RD/PK

DPS1-A DPS2-A DPS2-B

DPS

DPS1-D DPS1-C

DPS3-B DPS3-A

BK

WH/BK WH/BE-18 WH/BK-18

2-DB-5 2-DB-2

DB
DIAGNOSTIC CONNECTOR

2-DB-3 2-DB-1

WH/BE-18

JT WH/BE

WH/BE-18 WH/BK-18

S-BP1 S-BP2

SS
STARTER SOLENOID

S-BP3

RD-6 RD-6 RD-6

RD-12

S-BAT1 4-SM

BAT
BATTERY 12 VDC 18 AH

S-BAT2

SM
STARTER MOTOR

BK-6

RD-12

S-RD1-1

RD
RECTIFIER

U V W –

S-RD2-1 S-RD2-2 S-RD2-3 S-RD1-3

YL-12 YL-12 YL-12 BK-12 BK-6

CA-1 CA-2 CA-3

YL-14 YL-14 YL-14

CA
MAGNETO 650 WATTS

BK-12 BK-6

BK-6

S-BN2 S-BN3

S-BN4 4-BN5

S-BN1

BK-12

BK-12 JT BK1

JT BK2

BK-12 JT BK3

BK-12 JT BK4

tmr2013-049-003

23 MAI 2012 710002924- F3

COMMANDER 2013

GENERAL SYSTEM

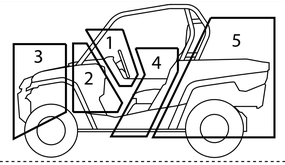

STANDARD USAGE OF ACCESSORY CONNECTORS

✳ DC3 GPS
DC5 TRUNK BOX
DC6 RADIO
DPS2 SEE DPS SYSTEM DIAGRAM
HIC8 SEE ACS SYSTEM DIAGRAM

TERMINAL IDENTIFICATION						
	NAME	ZONE-	CONNECTOR NAME-		TERMINAL #/A	
EX:	CI	1	-	CI	-	15
EX:	CV	4	-	CV	-	A
EX:	ME	2	-	ME		

ZONE #	ZONE DESCRIPTION
1	STEERING AREA
2	MODULE AREA
3	FRONT OF VEHICLE
4	ENGINE AREA
5	REAR OF VEHICLE

●	WELDED JOINT
▬	SHRINKED JOINT
⤫	CROSSED WIRE
▰	WIRE BUS
—	SIMPLE CONDUCTOR WIRE
⋋	FEMALE TERMINAL
→	MALE TERMINAL
⊸	STEEL LINK (FRAME)
⊣	TERMINAL

COLOR CODE	
BE	BEIGE
BK	BLACK
BU	BLUE
BR	BROWN
GN	GREEN
GY	GREY
OR	ORANGE
RD	RED
VI	VIOLET
WH	WHITE
YL	YELLOW
PK	PINK
LT BU	LIGHT BLUE

JT RD/GN
JT RD/GY
JT OR/BE
JT OR/GN
JT RD/BE
JT BE/WH
JT BK/YL
JT VI/BU
JT WH/BK
JT WH/BE
JT WH
JT RD/YL
JT RD/BK
JT RD/VI
JT RD/BR
JT RD/OR
JT OR/BK
JT OR/VI
JT GN
JT BU
JT BK1
JT BK2
JT BK3
JT BK4
JT BK5

PF2 (1/3) MAIN FUSE (F1) 40 A
PF2 (2/3) ACCES. FUSE (F2) 40 A
PF2 (3/3) DPS/ ACS (F3) 50 A
DPS2
HIC- 8
PF1 CONTROL EURO F10 5A
PF1 KEY SWITCH FUSE (F8) 5 A
1-HIBM-4
PF1 MAIN RELAY (R2)
PF1 RELAY SPEEDO FUSE (F4) 10 A
PF1 RELAY DRIVER FUSE (F13) 5 A
PF1 FUEL PUMP (F15) 5 A
PF1 ECM FUSE (F6) 5 A
PF1 INJECTORS IGNITION FUSE (F5) 7.5 A
CC IGNITION KEY (ON & DESS)
OFF
ON W/LIGHT
ON WO/LIGHT
SS STARTER SOLENOID
FREE WEELING DIODE (D2)
SM STARTER MOTOR
BAT BATTERY 12 VDC 18 AH
SPORT SWITCH
FREE
SPORT
SEAT BELT
FREE
LOCK
STSW START SWITCH
FREE
START
FP (1/2) FUEL PUMP
INJ1 FUEL INJECTOR (FRONT)
INJ2 FUEL INJECTOR (REAR)
BA IGNITION COIL
SPK2 SPARK PLUG (REAR)
SPK1 SPARK PLUG (FRONT)
CI SPEEDOMETER & PILOT LAMPS
FUEL
ENGINE
4WD
HI BEAM
FP (2/2) FUEL LEVEL SENSOR
SD 2WD/4WD ACTUATOR SWITCH
DB DIAGNOSTIC CONNECTOR
MD 2WD/4WD ACTUATOR
ONE-WAY DIODE (D5)
ONE-WAY DIODE (D4)
SW WINCH RELAY
WM WINCH MOTOR
SWW WINCH SWITCH
OUT
FREE
IN
BD 2WD/4WD SWITCH
2WD
4WD
PF1 WINCH 2WD/4WD FUSE (F7) 5 A
PF1 DC OUTLETS FUSE (F12) 15A
PF1 ACC2 FUSE (F14) 15A
PF1 LIGHT FUSE (F11) 30A
FRA BRAKE LIGHT SWITCH
PF1 ACCESSORIES RELAY (R3)
PF1 COOLING FAN FUSE (F9) 25 A
PF1 FAN RELAY (R1)
FT COOLING FAN
DC6 DC OPTION
DC5 DC OPTION
PF1 LIGHTS RELAY (R4)
HIBM HI- BEAM SWITCH
HIBM
LOBM
PF1 BRK RELAY (R8)
DC3 DC OPTION
DC DC OUTLET
OPS OIL PRESSURE SWITCH
PRD RIGHT TAIL LIGHT
PRG LEFT TAIL LIGHT
DC4
RD RECTIFIER
U V W –
ECM ENGINE CONTROL MODULE
CA MAGNETO
ETA ELECTRONIC THROTTLE
TPS
OVR OVERRIDE
FREE
OVER RIDE
CTS COOLANT TEMP SENSOR
VSS VEHICULE SPEED SENSOR
MAPTS MANIFOLD AIR PRESSURE / TEMP SENSOR
GBPS GEAR - BOX POSITION SENSOR
CPS CRANKSHAFT POSITION SENSOR
TAS THROTTLE ACCELERATOR SENSOR
HALL
380
2,5k
2,5k

Main Harnesses — All Models Connectors and Interconnections

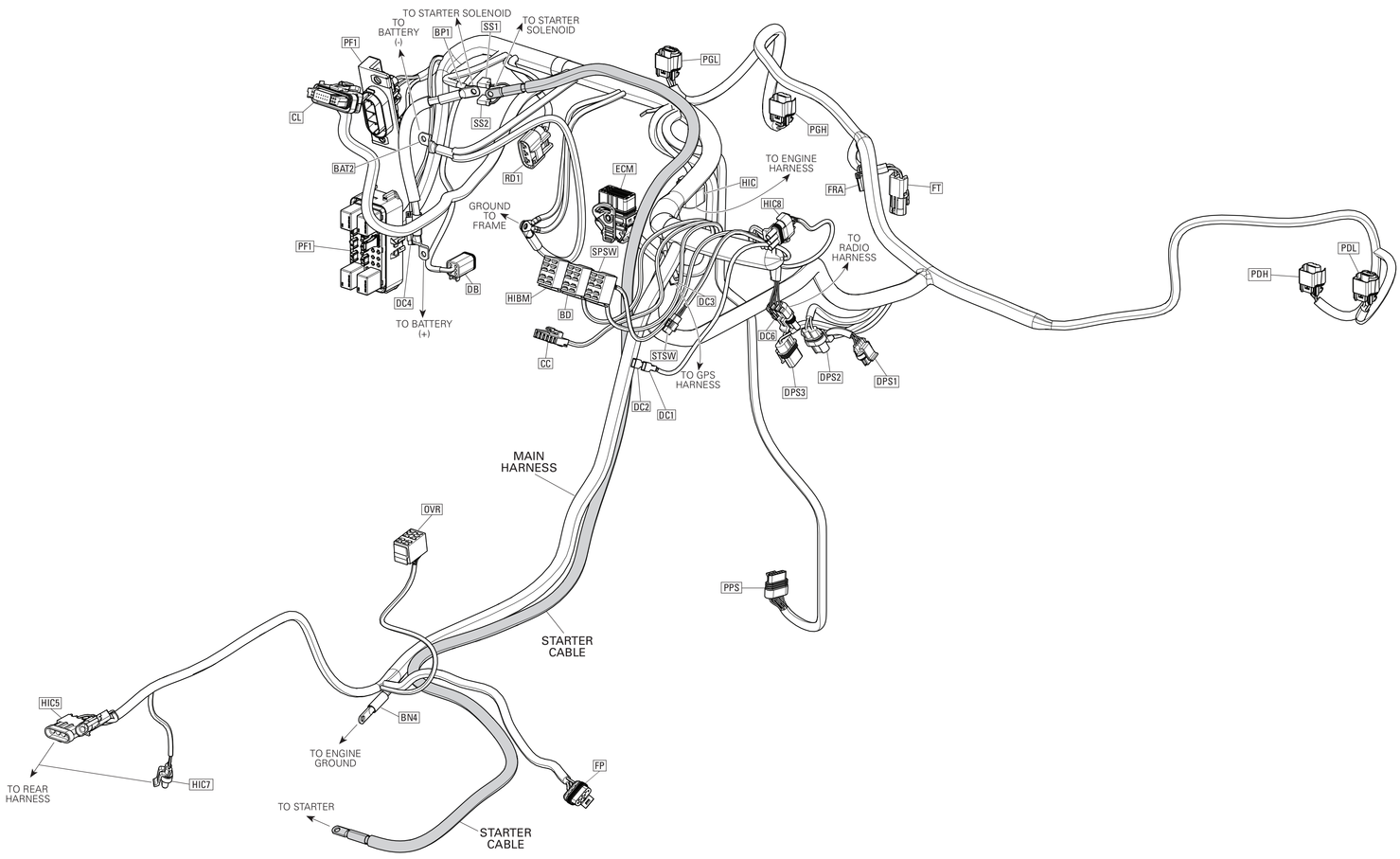

tmr2013-030-001_a

Main Harnesses — All Models Splices and Diodes

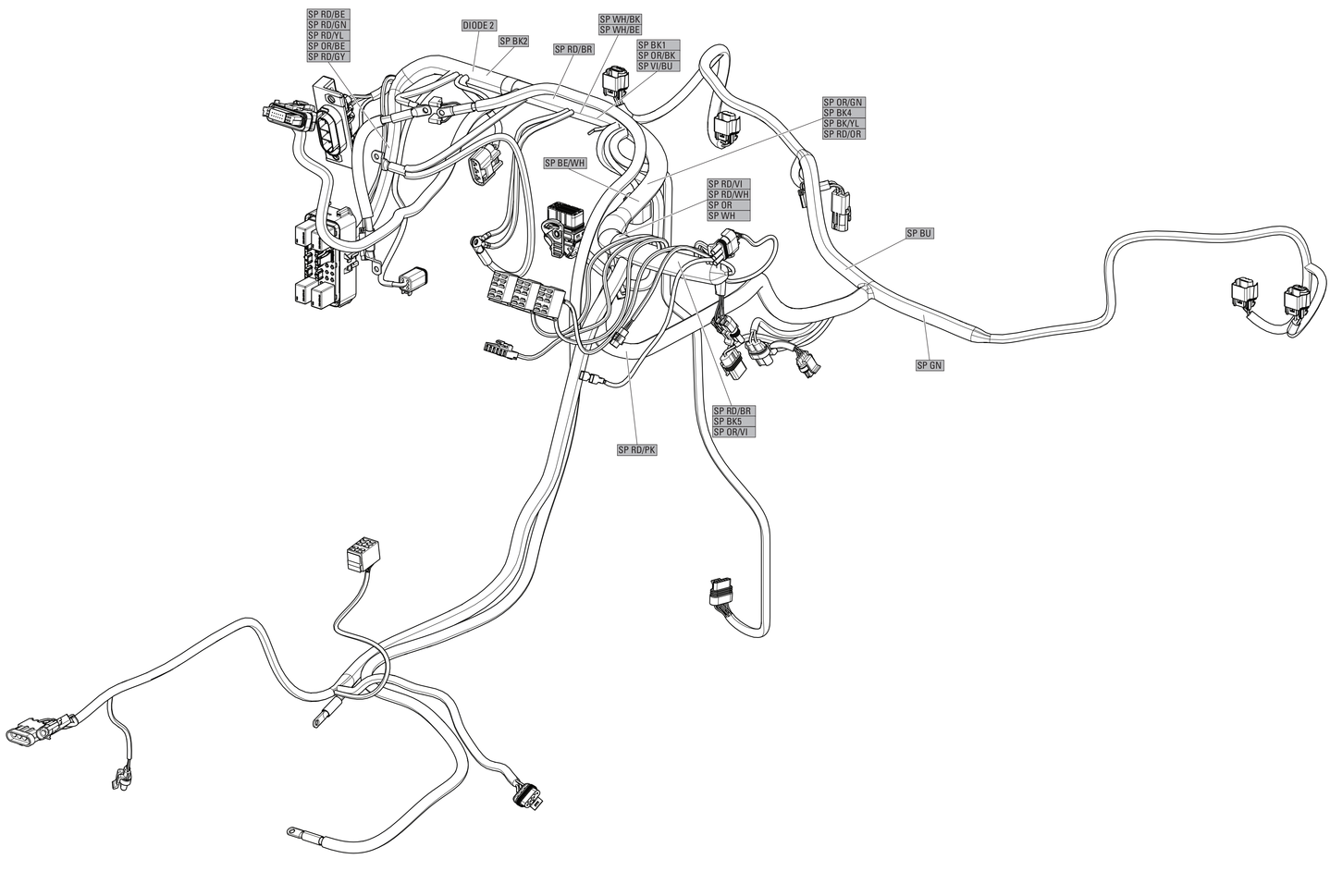

tmr2013-030-001_b

CONNECTORS

ABBREVIATION	DESCRIPTION
ACS	Air controlled suspension
BAT2	Ground terminal
BD	2WD/4WD switch
BN1	Ground terminal
BN2	Ground terminal
BN3	Ground terminal
BN4	Ground terminal
BP1	Positive terminal
BV1	Valve block (ACS)
BV2	Rear valve block (ACS)
CAG	LH front turn light
CC	RH front turn light
	Ignition switch
CL	Cluster
CRD	Rear RH turn light
CRG	Rear LH turn light
DB	Diagnostic connector
DC1	Accessory outlet
DC2	Accessory outlet
DC3	Accessory outlet (to GPS harness)
DC4	Accessory outlet (to cargo box)
DC5a	Accessory outlet (to cargo box)
DC5b	Accessory outlet (to radio)
DC6	Accessory outlet
DC7	Dynamic power steering
DPS1	Dynamic power steering
DPS2	Dynamic power steering
DPS3	Dynamic power steering
DPSSW	Engine control module
ECM	Front LH speaker
FL	Front RH speaker
FR	Fuel pump
FPC1	LH position light
FPD1	LH position light
FPD2	RH position light
FPD3	Brake light switch
FRA	Radio (front speakers)
FS	Cooling fan
FT	High beam headlight
HIBM	Harness interconnect
HIC	Harness interconnect
HIC5	Harness interconnect
HIC6	Harness interconnect
HIC8	Hazard light switch
HZ	Horn
KX1	Horn
KX2	Compressor (ACS)
M1	Turn light relay
MC1	Turn light relay
MC2	Multifunction lever
MGB	Multifunction lever
MGC	Override switch
OVR	RH upper headlight
PD1	RH upper headlight
PDH	RH upper headlight
PDL	Fuse box #1
PF1	Fuse holder #2
PF2	Ground terminal
PF21	LH LO beam headlight
PGL	LH HI beam headlight
PGH	LH license plate
PLG	RH license plate
PLD	Accelerator pedal position sensor
PPS	Rear RH light
PRD	Rear LH light
PRG	Voltage regulator/rectifier
RD1	Rear LH speaker
RL	ACS relay
RL1	Radio
RO1	Rear RH speaker
RRR	Speaker
S-	Speaker
S+	ACS switch
S1	Seat belt switch
SB	SPORT mode switch
SPSW	Starter solenoid
SS1	Starter solenoid
SS2	Starter switch
STSW	Winch relay
SW1	Winch relay
SW2	Winch relay
SW3	Winch relay
SW4	Winch remote switch
SWW	Winch switch
SWWRC	Temperature sensor (ACS)
T1	Tail gate
TG	

Rear/Tail Gate Harnesses — All Models

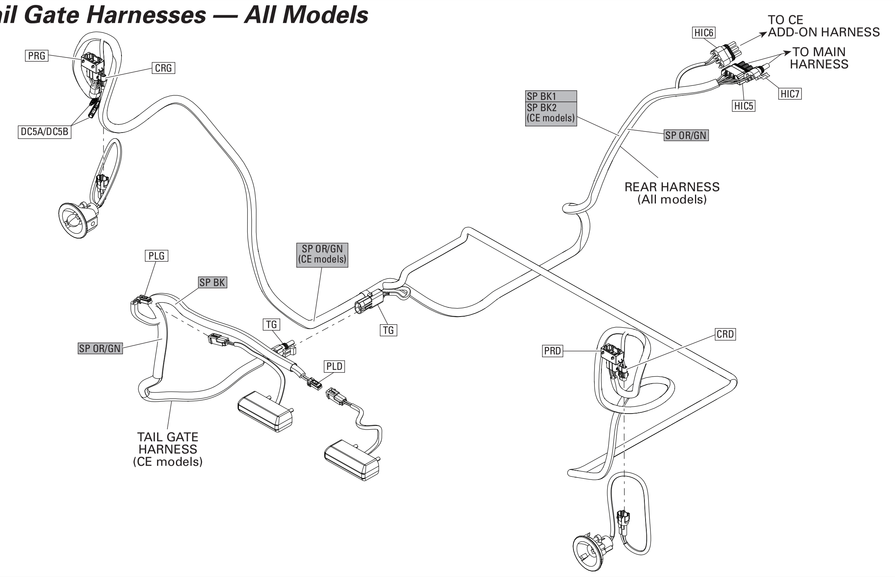

CE Add-On Harnesses (Front) — CE Models

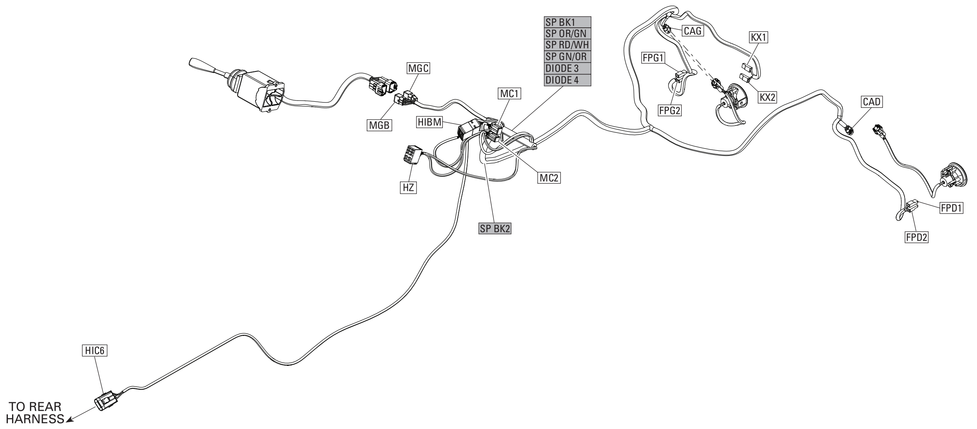

Winch Cables — Winch-Equipped Models

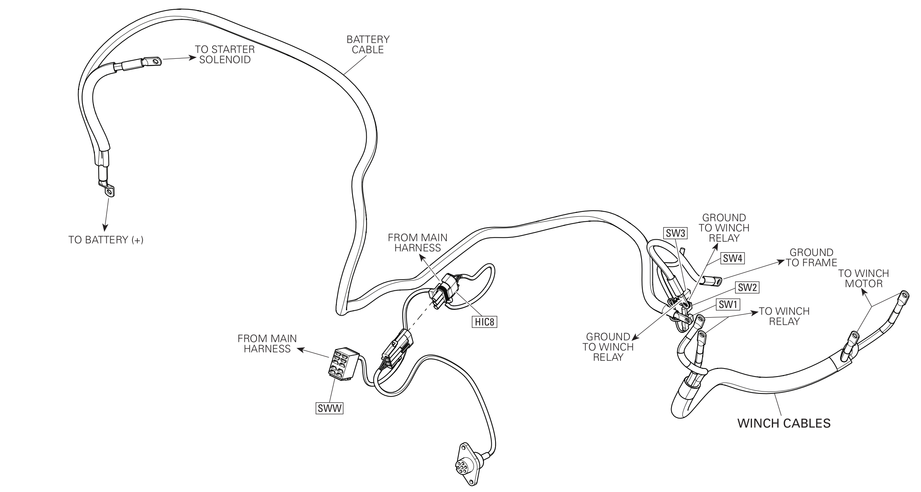

CONNECTORS

ABBREVIATION	DESCRIPTION
ACS	Air controlled suspension
BAT2	Ground terminal
BD	2WD/4WD switch
BN1	Ground terminal
BN2	Ground terminal
BN3	Ground terminal
BN4	Ground terminal
BP1	Positive terminal
BV1	Valve block (ACS)
BV3	Release valve (ACS)
CAD	LH front turn light
CAG	RH front turn light
CC	Ignition switch
CL	Cluster
CRD	Rear RH turn light
CRG	Rear LH turn light
DB	Diagnostic connector
DC1	Accessory outlet
DC2	Accessory outlet
DC3	Accessory outlet (to GPS harness)
DC4	Accessory outlet
DC5a	Accessory outlet (to cargo box)
DC5b	Accessory outlet (to cargo box)
DC6	Accessory outlet (to radio)
DC7	Accessory outlet
DPS1	Dynamic power steering
DPS2	Dynamic power steering
DPS3	Dynamic power steering
DPSSW	Dynamic power steering switch
ECM	Engine control module
FL	Front LH speaker
FR	Front RH speaker
FP	Fuel pump
FPG1	LH position light
FPG2	LH position light
FPD1	RH position light
FPD2	RH position light
FRA	Brake light switch
FS	Radio (front speakers)
FT	Cooling fan
HIBM	High beam headlight
HIC	Harness interconnect
HIC5	Harness interconnect
HIC6	Harness interconnect
HIC7	Harness interconnect
HIC8	Harness interconnect
HZ	Hazard light switch
KX1	Horn
KX2	Horn
M1	Compressor (ACS)
MC1	Turn light relay
MC2	Turn light relay
MGB	Multifunction lever
MGC	Multifunction lever
OVR	Override switch
PDL	RH lower headlight
PDH	RH upper headlight
PF1	Fuse box #1
PF2	Fuse holder #2
PF21	Ground terminal
PGL	LH LO beam headlight
PGH	LH HI beam headlight
PLG	LH license plate
PLD	RH license plate
PPS	Accelerator pedal position sensor
PRD	Rear RH light
PRG	Rear LH light
RD1	Voltage regulator/rectifier
RL	Rear LH speaker
RL1	ACS relay
RO1	Radio
RRR	Rear RH speaker
S-	Speaker
S+	Speaker
S1	ACS switch
SB	Seat belt switch
SPSW	SPORT mode switch
SS1	Starter solenoid
SS2	Starter solenoid
STW	Starter switch
SW1	Winch relay
SW2	Winch relay
SW3	Winch relay
SW4	Winch relay
SWW	Winch switch
SWWRC	Winch remote switch
T1	Temperature sensor (ACS)
TG	Tail gate

LTD Add-On Harnesses — LTD Models

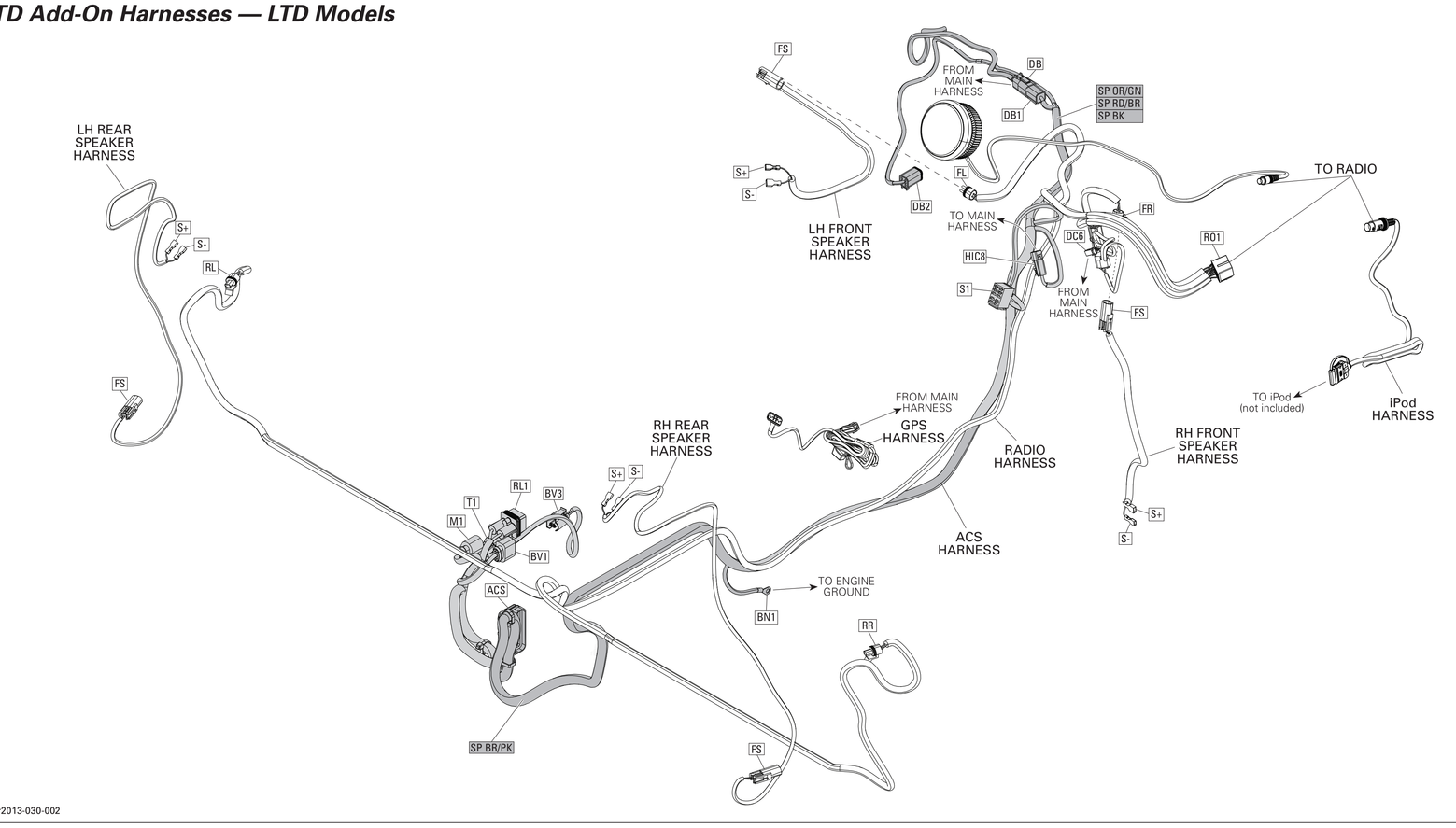

tmr2013-030-002

COMMANDER 2013

ACS SYSTEM

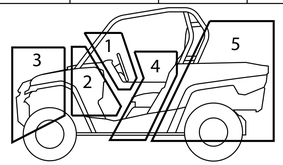

TERMINAL IDENTIFICATION						
	NAME	ZONE-	CONNECTOR NAME-	TERMINAL #/A		
EX:	CI	1	-	CI	-	15
EX:	CV	4	-	CV	-	A
EX:	ME	2	-	ME		

AWG	MAX. CURRENT	MAX. FUSE CURRENT	MAX. WATT
# 6	100 amps	125 amps	1450 watts
# 8	65 amps	80 amps	930 watts
# 10	40 amps	50 amps	580 watts
# 12	25 amps	30 amps	365 watts
# 14	16 amps	20 amps	230 watts
# 16	10 amps	15 amps	145 watts
# 18	6 amps	7.5 amps	85 watts
* AT	50°C MAX		

ZONE #	ZONE DESCRIPTION
1	STEERING AREA
2	MODULE AREA
3	FRONT OF VEHICLE
4	ENGINE AREA
5	REAR OF VEHICLE

	WELDED JOINT
	SHRINKED JOINT
	CROSSED WIRE
	WIRE BUS
	SIMPLE CONDUCTOR WIRE
	FEMALE TERMINAL
	MALE TERMINAL
	STEEL LINK (FRAME)
	TERMINAL
	FRAME GROUND
	EGINE GROUND
	PHILLIPS SCREW
	NUT CONNECTION
	SPLICE CONNECTION
	COMPONENT CONNECTION
	SECTION OF MODULE
	SLOTTED SCREW
	OPTIONAL

COLOR CODE	
BE	BEIGE
BK	BLACK
BU	BLUE
BR	BROWN
GN	GREEN
GY	GREY
OR	ORANGE
RD	RED
VI	VIOLET
WH	WHITE
YL	YELLOW
PK	PINK
LT BU	LIGHT BLUE

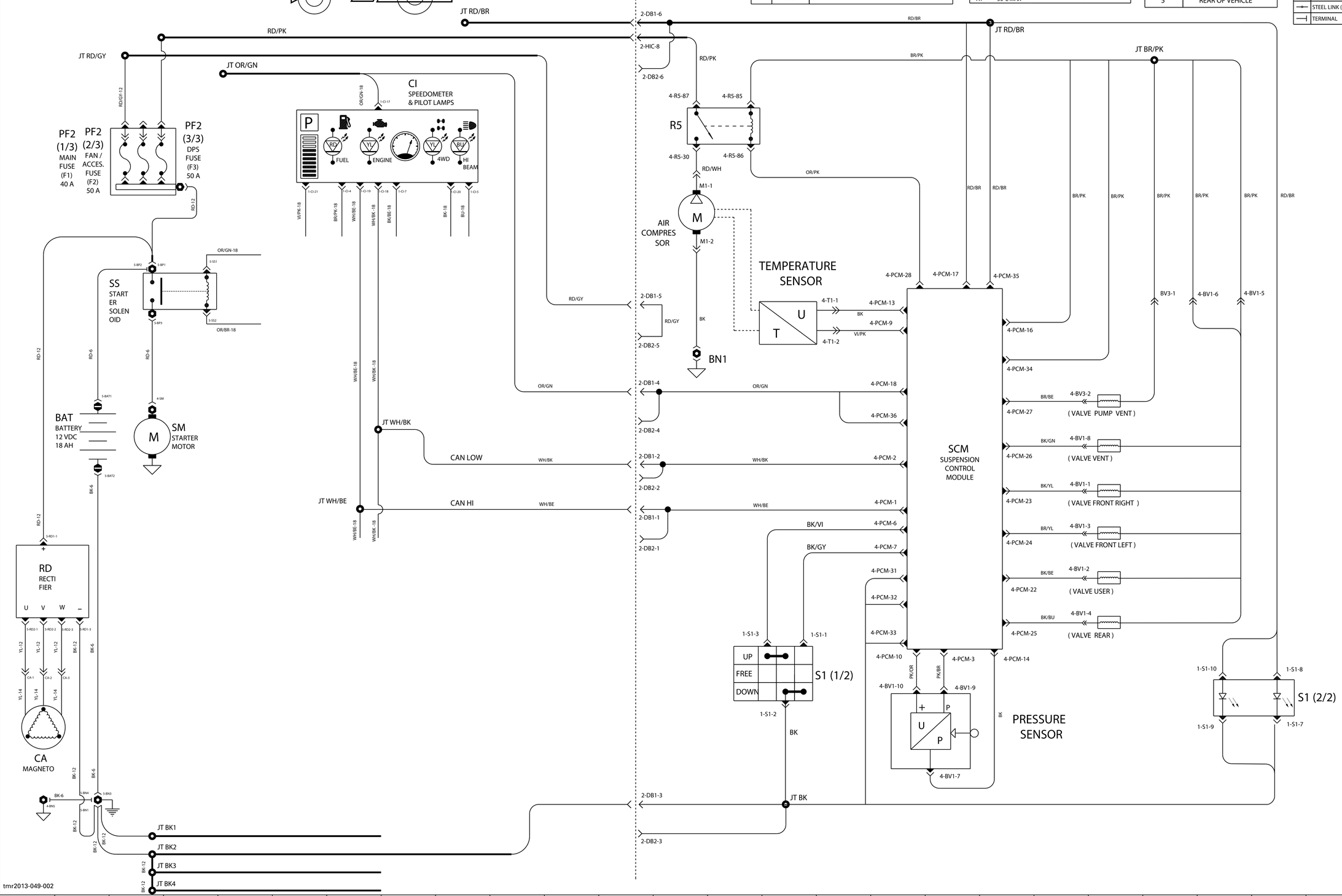

DB1 FROM MAIN HARNESS DIAGNOSTIC CONNECTOR

SEE MAIN HARNESS DIAGRAM FOR DETAILS ON DB1 AND HIC- 8

tmr2013-049-002

14 juin 2012

710003005F3

COMMANDER (2013)

CE SYSTEM

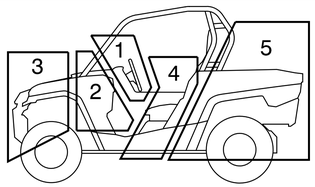

TERMINAL IDENTIFICATION		
	NAME	ZONE-CONNECTOR NAME-TERMINAL #/A
EX:	CI	1 - CI - 15
EX:	CV	4 - CV - A
EX:	ME	2 - ME

AWG	MAX. CURRENT	MAX. FUSE CURRENT	MAX. WATT
# 6	100 amps	125 amps	1450 watts
# 8	65 amps	80 amps	930 watts
# 10	40 amps	50 amps	580 watts
# 12	25 amps	30 amps	365 watts
# 14	16 amps	20 amps	230 watts
# 16	10 amps	15 amps	145 watts
# 18	6 amps	7.5 amps	85 watts
* AT	50°C MAX		

ZONE #	ZONE DESCRIPTION
1	STEERING AREA
2	MODULE AREA
3	FRONT OF VEHICLE
4	ENGINE AREA
5	REAR OF VEHICLE

	WELDED JOINT
	SHRINKED JOINT
	CROSSED WIRE
	WIRE BUS
	SIMPLE CONDUCTOR WIRE
	FEMALE TERMINAL
	MALE TERMINAL
	STEEL LINK (FRAME)
	TERMINAL

	FRAME GROUND
	EGINE GROUND
	PHILLIPS SCREW
	NUT CONNECTION
	SPLICE CONNECTION
	COMPONENT CONNECTION
	SECTION OF MODULE
	SLOTTED SCREW
	OPTIONAL

COLOR CODE	
BE	BEIGE
BK	BLACK
BU	BLUE
BR	BROWN
GN	GREEN
GY	GREY
OR	ORANGE
RD	RED
VI	VIOLET
WH	WHITE
YL	YELLOW
PK	PINK
LT BU	LIGHT BLUE

FROM VEHICLE MAIN HARNESS

FROM MAIN HARNESS HI/LO BEAM CONNECTOR (1 OF 2)

FROM VEHICULE MAIN HARNESS HI/LO BEAM CONNECTOR (2 OF 2)

2-HIBM-5 OR
2-HIBM-4 RD/WH
2-HIBM-3 GN
2-HIBM-2 BU

JT RD/WH

OR/GN
BK
5-HIC5-B
5-HIC5-A
OR/GN
BK
TRUNK HARNESS
5-TG-B
OR/GN
JT OR/GN
5-TG-A
PANEL HARNESS
5-PLG-2
LICENCE PLATE LIGHT
5-PLG-1
5-PLD-2
5-PLD-1
JT BK

2-HIBM-1 BK
2-HIBM-6 OR/GN
JT OR/GN
OR/GN
JT GN/OR

HZ-8
HAZARD
HZ-2
FREE
HZ
HZ-7
HZ-3
BK/OR
GN/OR

OR/GN
FLASHER
MGB-3
FREE
LH
RH
MGB-4
MGB-2

JT GN
HIBEAM
MGC-4
MGC-1
FREE
PASS
HI
MGC-5
MGC-2
JT BU

OR/GN
OR
BE/OR
BE/GY
RD/WH
MC1-5
MC2-4
MC1-1
MC1-2
MC2-1
GN/OR
MC1-6
MC (FLASHER UNIT MODULE)
MC1-4
MC2-2
MC2-3

HORN
MGB-1
FREE
HRN
MGB-6
BE/BU
KX-2
HORN
KX-1
BK

FRONT POSITION LIGHT
FPG-2
FPD-2
FPG
FPD
FPG-1
FPD-1

D3
D4
A
C
RIGHT
LEFT
BR
GY

FRONT RIGHT
CAD-2
HIC6-C
CAD
CAD-1
CRD-2
CRD
CRD-1
REAR RIGHT

HIC6-B
CAG-2
FRONT LEFT
CAG
CRG-2
CRG
CAG-1
REAR LEFT

JT BK1
JT BK2
HIC6-A

710003008F2

tmr2013-049-004

NOTES

NOTES

INTRODUCTION

This publication governs all warranty labor allowances for 2013 Can-Am SSV COMMANDER models.

1. HOW DOES IT WORK

We follow the procedures detailed in the *Can-Am SSV Shop Manual*. The flat rate time is the maximum time allowed for a repair involving any given part. FLAT RATE TIME IS NOT CUMULATIVE. You must use the flat rate time given for the longest lasting operation.

NOTE: The *Flat Rate Time Schedule* was prepared by skilled mechanics using the hand tool usually found in workshops and all the special tools mentioned in the *Shop Manual*.

2. COMPILATION

The *Flat Rate Time Schedule* is compiled as follows:

The actual required time to perform the repair plus (+) 30% correction factor up to 3.0 hours or (+) 15% over 3.0 hours time to take into account, among others:

- Vehicle handling
- Obtaining the parts
- Diagnosis
- Cleaning
- Special compensation (rusted bolts).

3. HOW TO USE IT

Refer to the system you need, locate part of series of parts replaced. List JOB CODE in the appropriate column on claim.

SYSTEM		PAGE
01	ENGINE SYSTEM	4
02	INTAKE AND FUEL SYSTEM	17
03	IGNITION SYSTEM	21
04	STARTER SYSTEM	23
05	TRANSMISSION AND LINKAGE SYSTEM	24

SYSTEM		PAGE
06	BRAKE SYSTEM	30
07	STEERING - FRONT DRIVE SYSTEM AND SUSPENSION	32
08	REAR DRIVE SYSTEM AND SUSPENSION	38
09	BODY AND ACCESSORIES	43
10	ELECTRICAL SYSTEM	56

NOTE: Unless otherwise specified, dismantling order is: top to bottom, exterior to interior, front to rear.

All fractions of hours are in tenths:

0.1 = 6 minutes
0.2 = 12 minutes, and so on

LEGEND:

* REQUIRES PRIOR AUTHORIZATION BY DISTRIBUTOR.
** INDICATE LABOUR TIME ON LINE "LABOUR ONLY" OF CLAIM.
*** INDICATE $$$ AMOUNT ON "SUB-CONTRACTED LABOUR" OF CLAIM.

IMPORTANT: Always use the longuest flat rate time applicable to the repair performed.

4. JOB REQUIREMENTS

All the flat rate times mentioned in the following pages include the required operations such as: engine timing (piston clearance/ring end gap measurement, crankshaft to crankcase measurement, cylinder honing, engine leak test.

5. ILLUSTRATIONS

The illustrations contained in this manual do not necessarily show every components of a given system as *Parts Catalog* do. Their purpose is to facilitate recognition of parts related to a flat rate time. Item numbers on illustrations correspond to the four or five digit Job Code.

6. SUGGESTION (FORM REQUEST)

INTRODUCTION

Cette publication détermine le temps de MAIN-D'OEUVRE couvert par la garantie pour les VCC Can-Am 2013 modèle COMMANDER.

1. UTILISATION DU MANUEL

En procédant de la façon indiquée dans le *Manuel de réparation Can-Am VCC*, chaque temps donné représente le maximum permis pour une réparation portant sur cette pièce. LES TEMPS NE SONT PAS CUMULATIFS. On doit inscrire le temps donné pour l'opération qui prend le plus de temps.

REMARQUE: Le *Barème de temps à taux fixe* a été préparé par des mécaniciens compétents utilisant les outils que l'on retrouve normalement dans les ateliers de réparation, en plus de tous les outils spéciaux mentionnés dans le *Manuel de réparation*.

2. COMPILATION

Le *Barème de temps à taux fixe* a été établi en compilant le temps nécessaire pour faire la réparation plus (+) un facteur de correction de 30% lorsqu'un travail dure 3.0 heures et moins, ou (+) 15% lorsqu'un travail dure plus de 3.0 heures. Cette compilation comprends, entre autres les étapes suivantes:

- Manutention du véhicule
- Nettoyage
- Aller chercher les pièces, essais physique
- Compensation spéciale (boulons rouillés)
- Diagnostic.

3. UTILISATION DU BARÈME

Se reporter à la section désirée, repérer la pièce ou l'ensemble de pièces remplacées et inscrire le CODE DE TRAVAIL dans la colonne appropriée sur la formule de réclamation.

SYSTÈME		PAGE
01	SYSTÈME MOTEUR	4
02	ADMISSION ET SYSTÈME D'ALIMENTATION D'ESSENCE	17
03	SYSTÈME D'ALLUMAGE	21
04	SYSTÈME DE DÉMARREUR	23
05	SYSTÈME DE TRANSMISSION ET DE TRINGLERIE	24

SYSTÈME		PAGE
06	SYSTÈME DE FREIN	30
07	DIRECTION - SYSTÈME D'ENTRAÎNEMENT AVANT ET SUSPENSION	32
08	SYSTÈME D'ENTRAÎNEMENT ARRIÈRE ET SUSPENSION	38
09	CARROSSERIE ET ACCESSOIRES	43
10	SYSTÈME ÉLECTRIQUE	56

REMARQUE: Sauf indication contraire, le démontage doit s'effectuer de haut en bas, de l'extérieur vers l'intérieur, de l'avant vers l'arrière.

Toutes les fractions d'heures sont exprimées en dixièmes:

0.1 = 6 minutes
0.2 = 12 minutes, et ainsi de suite

LÉGENDE:

* AUTORISATION REQUISE AVANT LE REMPLACEMENT.
** INSCRIRE LE TEMPS À LA LIGNE «MAIN-D'OEUVRE SEULEMENT».
*** INSCRIRE LE MONTANT $$$ À LA LIGNE «OUVRAGE SOUS-CONTRACTÉE».

IMPORTANT: Toujours utiliser le temps donné à l'opération qui nécessite le plus de temps.

4. TRAVAUX REQUIS

Tous les temps mentionnés dans les pages suivantes incluent les opérations telles que: réglage du moteur (mesure du jet des pistons/jeu en bout des segments, mesure de l'écart entre le vilebrequin et le carter, rectification du cylindre, vérification de fuite du moteur.

5. ILLUSTRATIONS

Contrairement aux *Catalogues de pièces*, les illustrations de ce manuel ne montrent pas nécessairement chacune des pièces qu'elles représentent, leur raison d'être étant plutôt de faciliter la reconnaissance des pièces reliées à un barème de temps à taux fixe. Les numéros d'items sur les illustrations correspondent aux quatre ou cinq derniers chiffres du code de travail.

6. SUGGESTION (FORMULAIRE)

2012

Side-by-Side Vehicle / Véhicule Côte-à-Côte

TABLE	DESCRIPTION	MODEL/MODÈLE	ENGINE TYPE/ TYPE DE MOTEUR
1	COMMANDER 800	6CDA/6CDB/6CDC/6CDD	800 CVT
	COMMANDER DPS 800	6TDA	
	COMMANDER XT 800	6DDA/6DDB/6DDC	
2	COMMANDER 1000	6ADA/6ADB	1000 CVT
	COMMANDER DPS 1000	6PDA	
	COMMANDER XT 1000	6BDA/6BDB/ 6BDD/6BDE/ 6BDF/6BDG/6BDH/6BDJ	
	COMMANDER X 1000	6EDA/6EDB/6EDC/6EDD 6EDF	
3	COMMANDER LTD 1000	6GDA/6GDB/6GDC/6GDD/ 6GDE	1000 CVT

ENGINE SYSTEM
SYSTÈME MOTEUR

SYSTEM SYSTÈME	CODE	DESCRIPTION	COMMANDER 800	COMMANDER 1000	COMMANDER LTD 1000
			1	2	3
01	**00**	**NO LABOR INVOLVED AUCUNE MAIN D'OEUVRE**	**0**	**0**	**0**
01 *	01	REMOVE AND REPLACE ENGINE (ASS'Y) REMPLACEMENT DU MOTEUR (COMPLET)	5.5	5.5	5.5
01	03	OIL PRESSURE SWITCH INTERRUPTEUR DE PRESSION D'HUILE	0.4	0.4	0.4
01	08	FAN AND/OR FAN SUPPORT VENTILATEUR ET/OU SUPPORT DE VENTILATEUR	1.1	1.1	1.1
01	18	SENDER TEMPERATURE (ENGINE) CAPTEUR DE TEMPÉRATURE (MOTEUR)	0.4	0.4	0.4
01	19	THERMOSTAT THERMOSTAT	1.0	1.0	1.0
01	21	COOLANT HOSE T-FITTING (ONE OR TWO) BOYAU DE LIQUIDE DE REFROIDISSEMENT RACCORD EN T (1 OU 2)	1.0	1.0	1.0
01	37	RADIATOR INLET HOSE BOYAU D'ENTRÉE DU RADIATEUR	0.6	0.6	0.6
01	38	WATER PUMP SHAFT (ALL PARTS) ARBRE DE POMPE À L'EAU (TOUTES LES PIÈCES)	6.4	6.4	6.4
01	45	ENGINE RUBBER MOUNT TAMPONS D'ANCRAGE DU MOTEUR	5.6	5.6	5.6
01	46	RADIATOR AND/OR GROMMMET RADIATEUR ET/OU PASSE-FILS	1.1	1.1	1.1
01	50	CRANKSHAFT AND/OR BEARINGS (FRONT/REAR) VILEBREQUIN ET/OU ROULEMENTS (AVANT/ARRIÈRE)	7.5	7.5	7.5
01	56	CRANKCASE COVER GASKET JOINT DE COUVERCLE DE CARTER	2.0	2.0	2.0
01	57	PTO CRANKCASE COVER COUVERCLE DE CARTER PDM	2.0	2.0	2.0
01	58	INTAKE OR EXHAUST VALVE GUIDE (1) GUIDE DE SOUPAPE D'ADMISSION OU D'ÉCHAPPEMENT (1)	3.1	3.1	3.1
01	59	INTAKE OR EXHAUST VALVE GUIDE (2) GUIDE DE SOUPAPE D'ADMISSION OU D'ÉCHAPPEMENT (2)	3.2	3.2	3.2
01	70	MUFFLER AND/OR EXHAUST GASKET AND/OR CLAMP SILENCIEUX D'ÉCHAPPEMENT ET/OU JOINT D'ÉCHAPPEMENT ET/OU BRIDE DE SERRAGE	0.3	0.3	0.3
01	71	EXHAUST MANIFOLD COLLECTEUR D'ÉCHAPPEMENT	0.8	0.8	0.8
01	73	EXHAUST MANIFOLD (REAR) CONNECTEUR D'ÉCHAPPEMENT (ARRIÈRE)	0.6	0.6	0.6
01	77	ANTI-VIBRATION RUBBER MOUNT (1 OR 2) (TOP) TAMPON D'ANCRAGE ANTI-VIBRATION (1 OU 2) (HAUT)	0.5	0.5	0.5

SYSTEM SYSTÈME	CODE	DESCRIPTION	COMMANDER 800	COMMANDER 1000	COMMANDER LTD 1000
			1	2	3
01	79	COOLANT HOSE (RADIATOR TO TANK) BOYAU DU SYSTÈME DE REFROIDISSEMENT (RÉSERVOIR AU RADIATEUR)	0.3	0.3	0.3
01	83	EXHAUST MANIFOLD (FRONT) CONNECTEUR D'ÉCHAPPEMENT (AVANT)	0.7	0.7	0.7
01	88	RUBBER MOUNT (MUFFLER) TAMPON D'ANCRAGE (SILENCIEUX)	0.3	0.3	0.3
01	90	ENGINE OIL FILTER FILTRE À HUILE DU MOTEUR	0.4	0.4	0.4
01	96	OIL SIEVE AND/OR O-RING AND/OR COLLECTOR AND/OR RUBBER RING AND/OR COVER CRIBLE D'HUILE ET/OU JOINT TORIQUE ET/OU COLLECTEUR ET/OU ANNEAU DE CAOUTCHOUC ET/OU COUVERCLE	7.5	7.5	7.5
01	98	COOLING RESERVOIR RÉSERVOIR D'ANTIGEL	0.4	0.4	0.4
01	100	RADIATOR OUTLET HOSE BOYAU DE SORTIE DU RADIATEUR	0.6	0.6	0.6
01	101	PISTON, PIN, CIRCLIP, RINGS (1) PISTON, GOUPILLE, CIRCLIP, SEGMENTS (1)	3.1	3.1	3.1
01	102	PISTONS, PINS, CIRCLIPS, RINGS (2) PISTONS, GOUPILLES, CIRCLIPS, SEGMENTS (2)	4.9	4.9	4.9
01	109	VALVE COVER AND/OR GASKET COUVERCLE DE SOUPAPE ET/OU JOINT D'ÉTANCHÉITÉ	0.4	0.4	0.4
01	111	TIMING GEAR PIGNON DE DISTRIBUTION	1.6	1.6	1.6
01	113	ROCKER ARM AND/OR PUSH ROD AND/OR ROCKER ARM SHAFT CULBUTEUR ET/OU TIGE POUSSOIR ET/OU ARBRE DE CULBUTEUR	1.7	1.7	1.7
01	114	CYLINDER HEAD AND/OR GASKET CULASSE ET/OU JOINT D'ÉTANCHÉITÉ	3.8	3.8	3.8
01	116	EXHAUST AND/OR INLET VALVE AND/OR SPRING AND/OR SEAL VALVE ADMISSION ET/OU ÉCHAPPEMENT ET/OU RESSORT ET/OU ANNEAU D'ÉTANCHÉITÉ	3.0	3.0	3.0
01	117	CYLINDER AND/OR GASKET CYLINDRE ET/OU JOINT D'ÉTANCHÉITÉ	3.0	3.0	3.0
01	119	WATER PUMP HOUSING AND/OR IMPELLER CARTER DE LA POMPE À EAU ET/OU ROUE À AILETTES	0.7	0.7	0.7
01	132	OIL PUMP GEAR ENGRENAGE DE LA POMPE À HUILE	2.1	2.1	2.1
01	133	OIL PIPE TUYAU À L'HUILE	0.4	0.4	0.4
01	134	CAMSHAFT ARBRE À CAME	2.6	2.6	2.6
01	137	OIL PUMP COVER AND/OR SHAFT AND/OR ROTOR COUVERCLE DE LA POMPE À HUILE ET/OU ARBRE ET/OU ROTOR	2.1	2.1	2.1

SYSTEM SYSTÈME	CODE	DESCRIPTION	COMMANDER 800	COMMANDER 1000	COMMANDER LTD 1000
			1	2	3
01	138	CRANKCASE RESEAL OR GASKET RECELLEMENT DU CARTER ET/OU JOINT D'ÉTANCHÉITÉ	7.5	7.5	7.5
01	139	CRANKCASE REPLACEMENT REMPLACEMENT DU CARTER	8.0	8.0	8.0
01	152	DRIVE SHAFT AND/OR BEARINGS AND/OR SEALS ARBRE D'ENTRAÎNEMENT ET/OU ROULEMENT À BILLES ET/OU ANNEAUX D'ÉTANCHÉITÉ	6.5	6.5	6.5
01	154	TIMING CHAIN CHAÎNE D'ENGRENAGE	3.4	3.4	3.4
01	179	CHAIN GUIDE GUIDE DE CHAÎNE	1.4	1.4	1.4
01	182	OIL RADIATOR AND/OR O-RING RADIATEUR D'HUILE ET/OU JOINT D'ÉTANCHÉITÉ		2.0	2.0
01	191	CHAIN TENSION GUIDE GUIDE DE TENSION DE CHAÎNE	3.4	3.4	3.4
01	192	CHAIN TENSIONER (ASS'Y) TENDEUR DE CHAÎNE (COMPLET)	0.4	0.4	0.4
01	200	WATER PUMP GEAR ENGRENAGE DE LA POMPE À EAU	2.1	2.1	2.1
01	201	PLUG, COMPRESSION SPRING, PRESSURE RETAINER AND BALL VIS, RESSORT DE COMPRESSION, SOUPAPE DE RETENUE ET BILLE	2.0	2.0	2.0
01	205	REAR OUTPUT SHAFT SEAL ANNEAU D'ÉTANCHÉITÉ DE L'ARBRE DE SORTIE ARRIÈRE	6.0	6.0	6.0
01	215	OIL DIPSTICK JAUGE À HUILE	0.3	0.3	0.3
01	216	PRESSURE CAP BOUCHON À PRESSION	0.3	0.3	0.3
01	217	ENGINE BRACKET AND/OR RUBBER MOUNT ATTACHE MOTEUR ET/OU TAMPON D'ANCRAGE	0.4	0.4	0.4
01	220	MAIN DRIVE GEAR AND/OR PIN ROUAGE D'ENTRAÎNEMENT PRINCIPALE ET/OU GOUPILLE	2.1	2.1	2.1
01	221	INTERMEDIATE GEAR AND/OR PIN AND/OR THRUST WASHER ROUAGE INTERMEDIAIRE ET/OU GOUPILLE ET/OU RONDELLE D'APPUI	2.1	2.1	2.1
01	223	FRONT OUTPUT SHAFT SEAL ANNEAU ÉTANCHÉITÉ ARBRE SORTIE AVANT	6.0	6.0	6.0
01	245	OUTPUT CRANKSHAFT SEAL (PTO SIDE) ANNEAU ÉTANCHÉITÉ SORTIE VILEBREQUIN (CÔTÉ PDM)	1.3	1.3	1.3
01	246	WATER PUMP GEAR AND/OR SEAL ARBRE POMPE À EAU ET/OU JOINT ÉTANCHÉITÉ	6.4	6.4	6.4
01	247	REED VALVE AND/OR STOPPER SOUPAPE À CLAPET ET/OU BUTOIR	2.1	2.1	2.1
01	248	BREATHER GEAR AND/OR V-RING RENIFLARD ET/OU ANNEAU ÉTANCHÉITÉ EN «V»	2.1	2.1	2.1

SYSTEM SYSTÈME	CODE	DESCRIPTION	COMMANDER 800	COMMANDER 1000	COMMANDER LTD 1000
			1	2	3
01	255	EXHAUST AND/OR INLET VALVES AND/OR SPRINGS AND/OR SEALS (4) ÉCHAPPEMENT ET/OU VALVES ADMISSION ET/OU RESSORTS ET/OU ANNEAUX D'ÉTANCHÉITÉ (4)	3.6	3.6	3.6
01	256	EXHAUST AND/OR INLET VALVES AND/OR SPRINGS AND/OR SEALS (8) ÉCHAPPEMENT ET/OU VALVES ADMISSION ET/OU RESSORTS ET/OU ANNEAUX D'ÉTANCHÉITÉ (8)	6.2	6.2	6.2
01	261	TIMING CHAIN (MAG SIDE) CHAÎNE D'ENGRENAGE (CÔTÉ MAG)	3.2	3.2	3.2
01	264	LONG BLOCK ENSEMBLE CARTER - CYLINDRE - CULASSE	7.4	7.4	7.4
01	301	WATER PUMP DYNAMIC SEAL AND/OR OIL SEAL ANNEAU D'ÉTANCHÉITÉ DYNAMIQUE DE LA POMPE À EAU	2.5	2.5	2.5
01	303	TIMING CHAINS (ALL) CHAÎNES D'ENGRENAGE (TOUTES)	5.5	5.5	5.5
01	304	CHAINS TENSION GUIDE (ALL) GUIDE DE TENSION DE CHAÎNES (TOUS)	5.5	5.5	5.5
01	305	CHAINS GUIDE (ALL) GUIDE DE CHAÎNES (TOUS)	2.1	2.1	2.1
01	307	VALVE COVERS AND/OR GASKETS (2) COUVERCLES SOUPAPE ET/OU JOINTS D'ÉTANCHÉITÉ (2)	0.7	0.7	0.7
01	308	CYLINDER HEAD GASKET (1) JOINT D'ÉTANCHÉITÉ DE LA CULASSE (1)	2.0	2.0	2.0
01	309	CYLINDER HEAD GASKETS (2) JOINTS D'ÉTANCHÉITÉ DE LA CULASSE (2)	2.7	2.7	2.7
01	319	MUFFLER COVER COUVRE SILENCIEUX	0.3	0.3	0.3
01	320	THROTTLE PEDAL PÉDALE D'ACCÉLÉRATEUR	0.4	0.4	0.4
01	334	FILLER NECK AND/OR HOSE GOULOT DE REMPLISSAGE ET/OU BOYAU	0.8	0.8	0.8
01	335	COOLANT HOSE (WATER PUMP) BOYAU DE REFROIDISSEMENT (POMPE À EAU)		1.5	1.5
01	336	COOLANT HOSE (ENGINE INLET) BOYAU DE REFROIDISSEMENT (ENTRÉE DU MOTEUR)		1.5	1.5
01	337	RECIRCULATION HOSE BOYAU DE RECIRCULATION		0.7	0.7
01	338	INTERMEDIATE HOSE BOYAU INTERMÉDIAIRE		0.7	0.7

800/1000

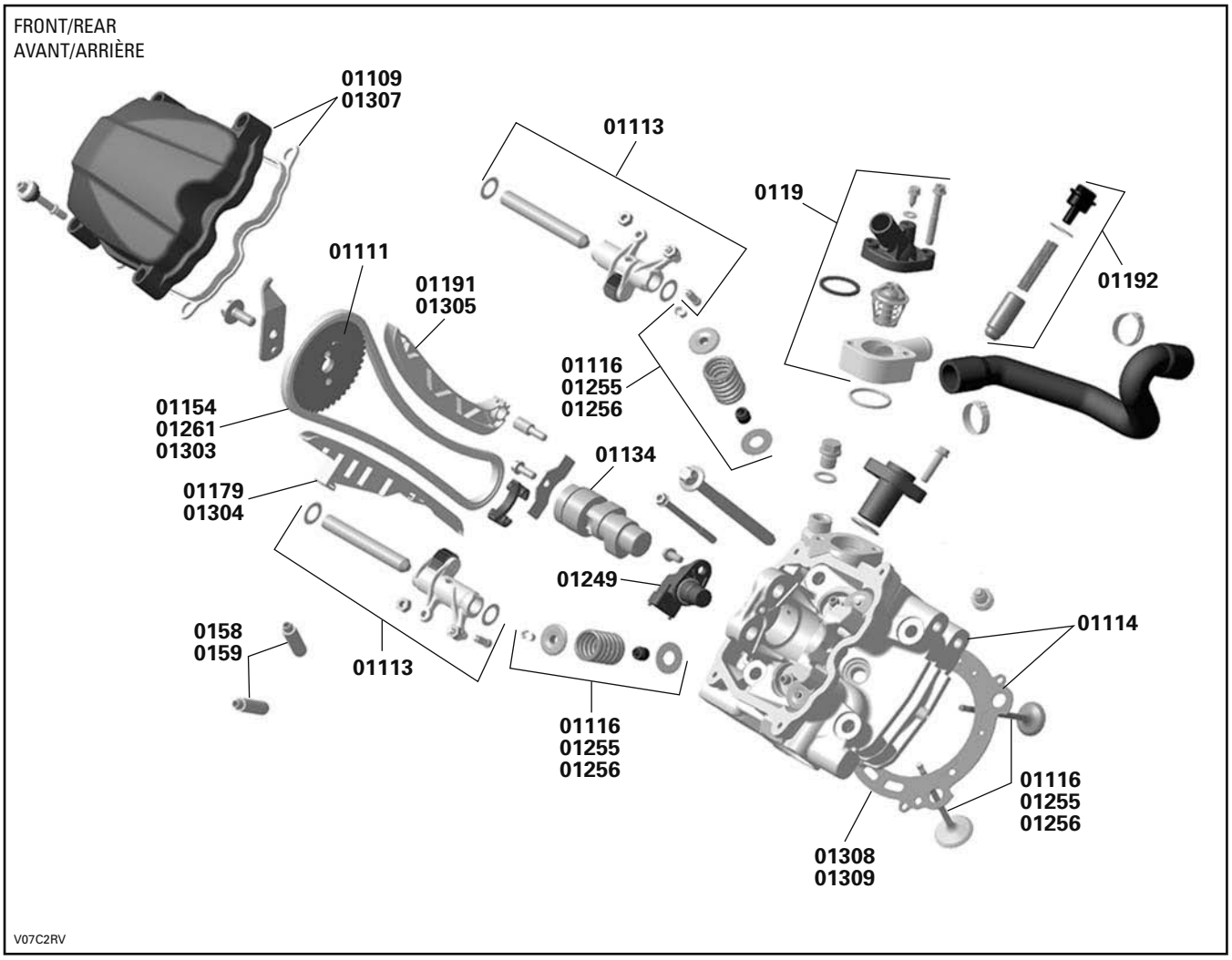
FRONT/REAR
AVANT/ARRIÈRE
01109
01307
01113
0119
01192
01111
01191
01305
01116
01255
01256
01154
01261
01303
01134
01179
01304
01249
01114
0158
0159
01113
01116
01255
01256
01116
01255
01256
01308
01309
V07C2RV

800/1000

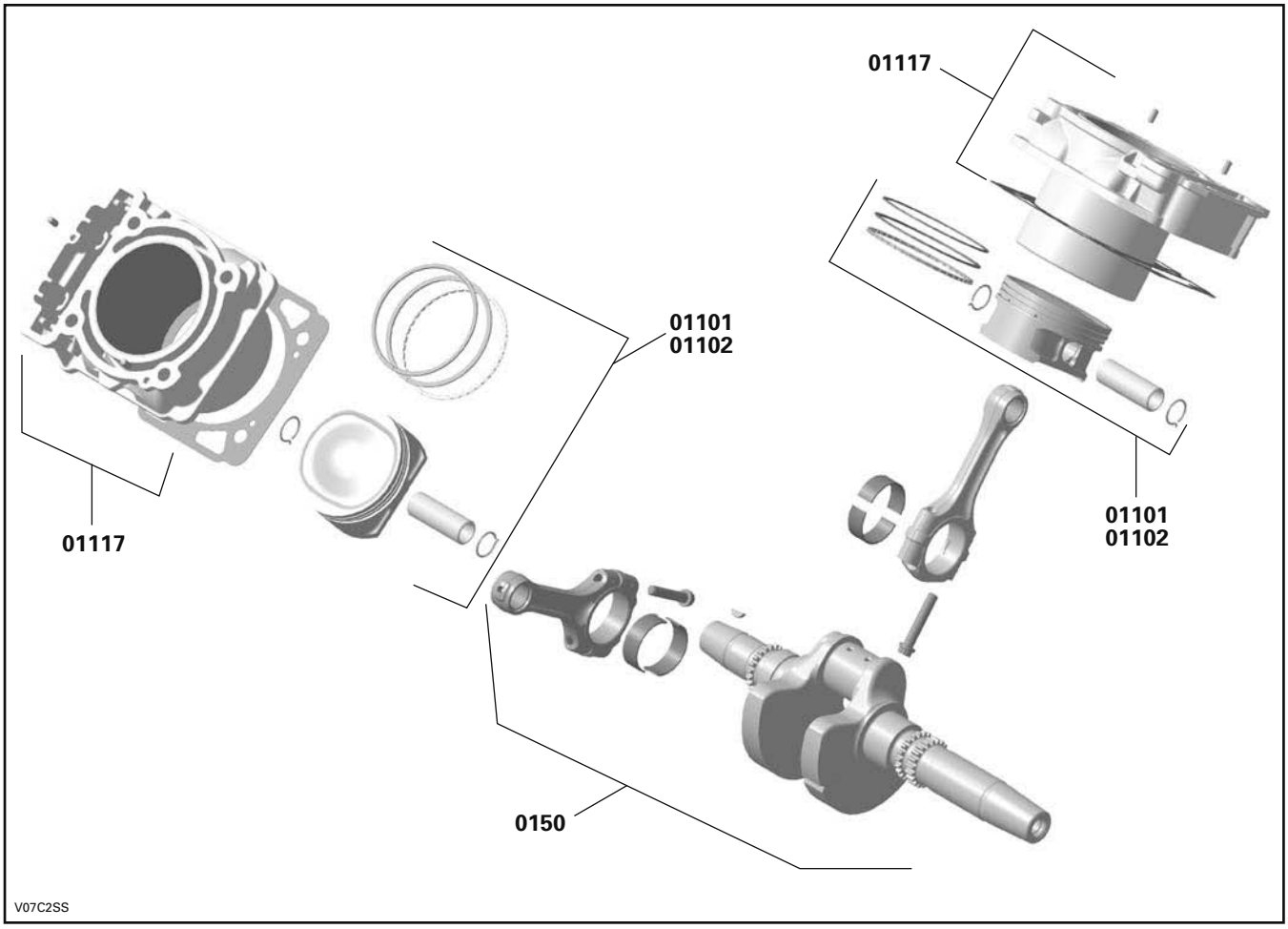

800/1000

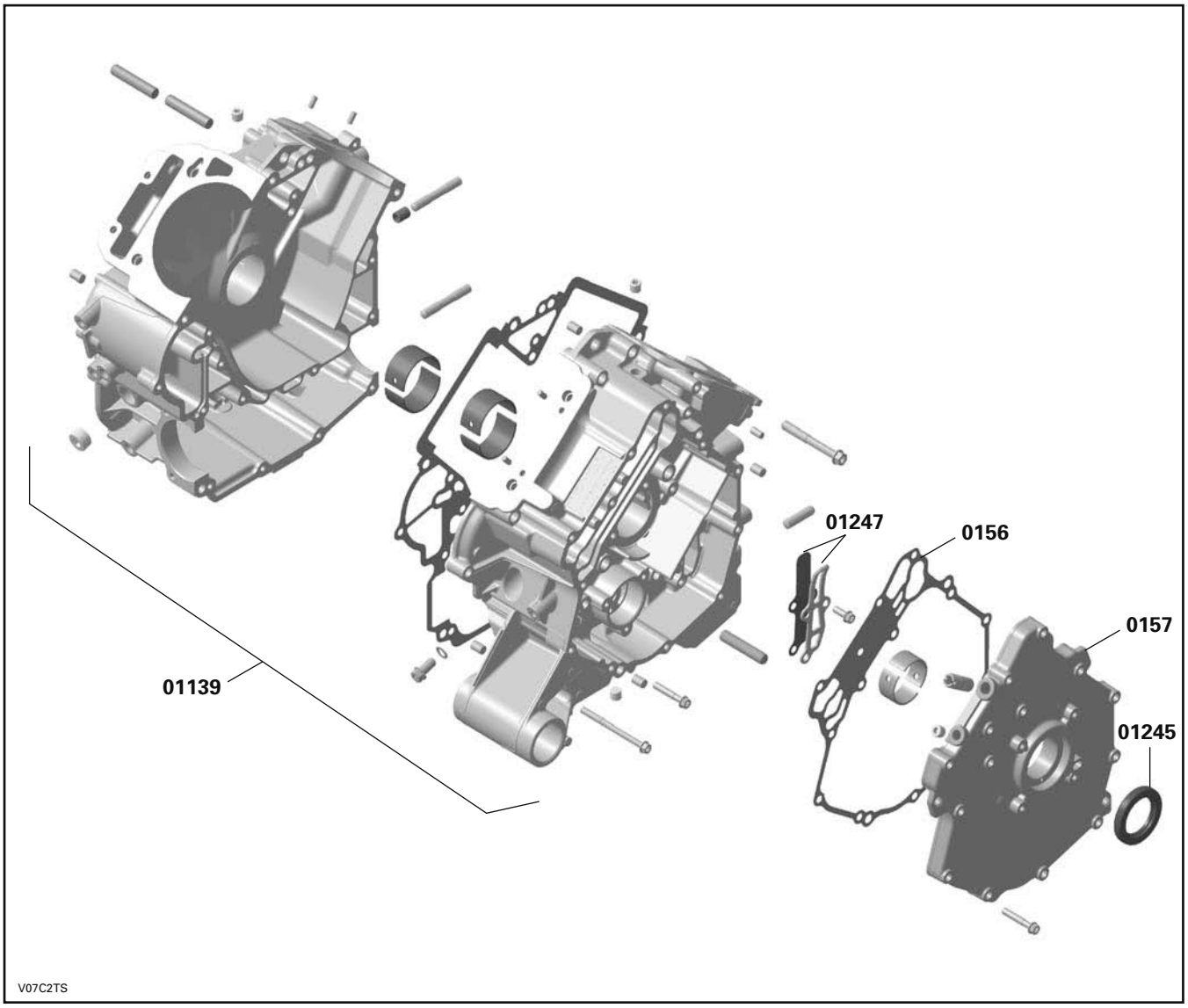

800

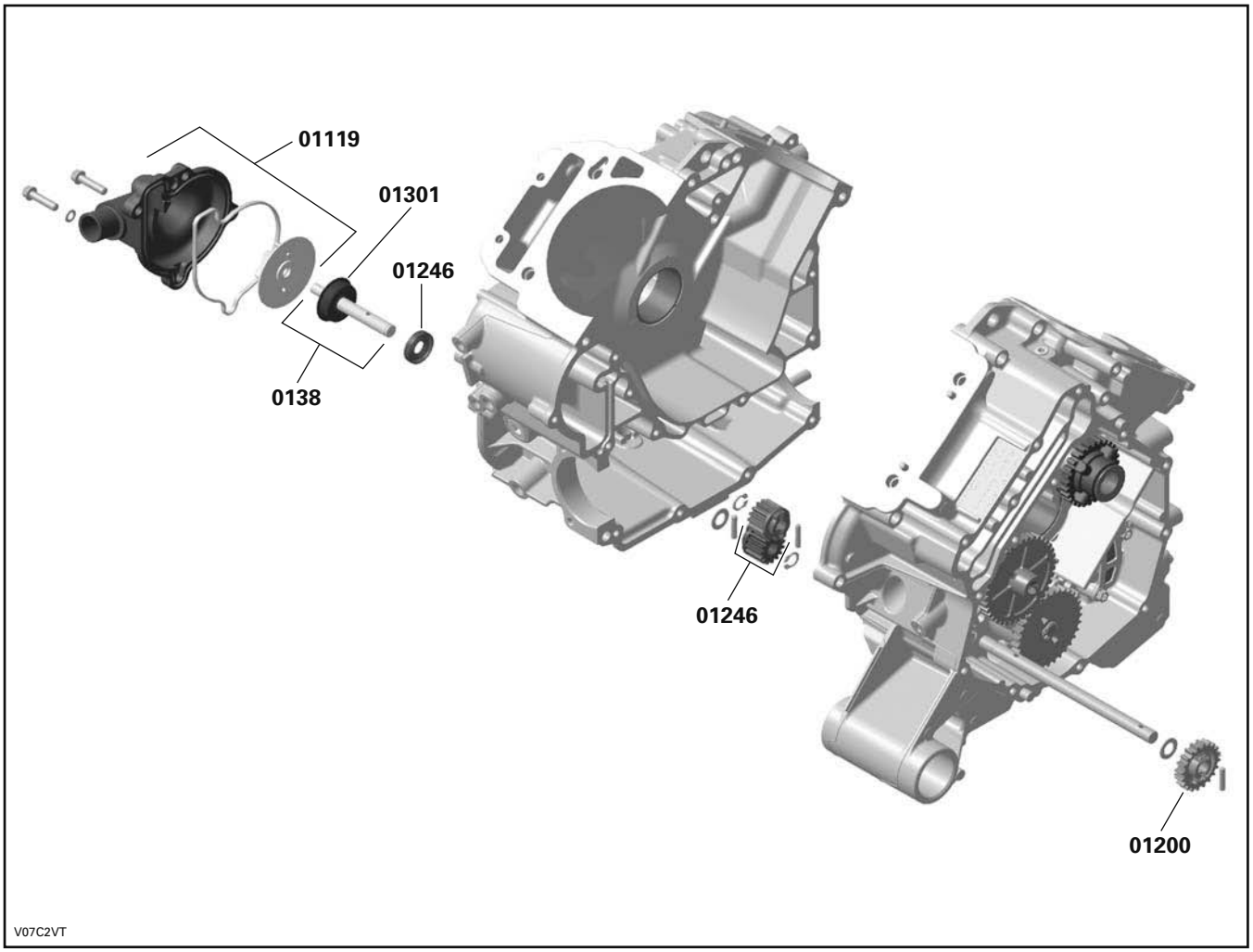

1000

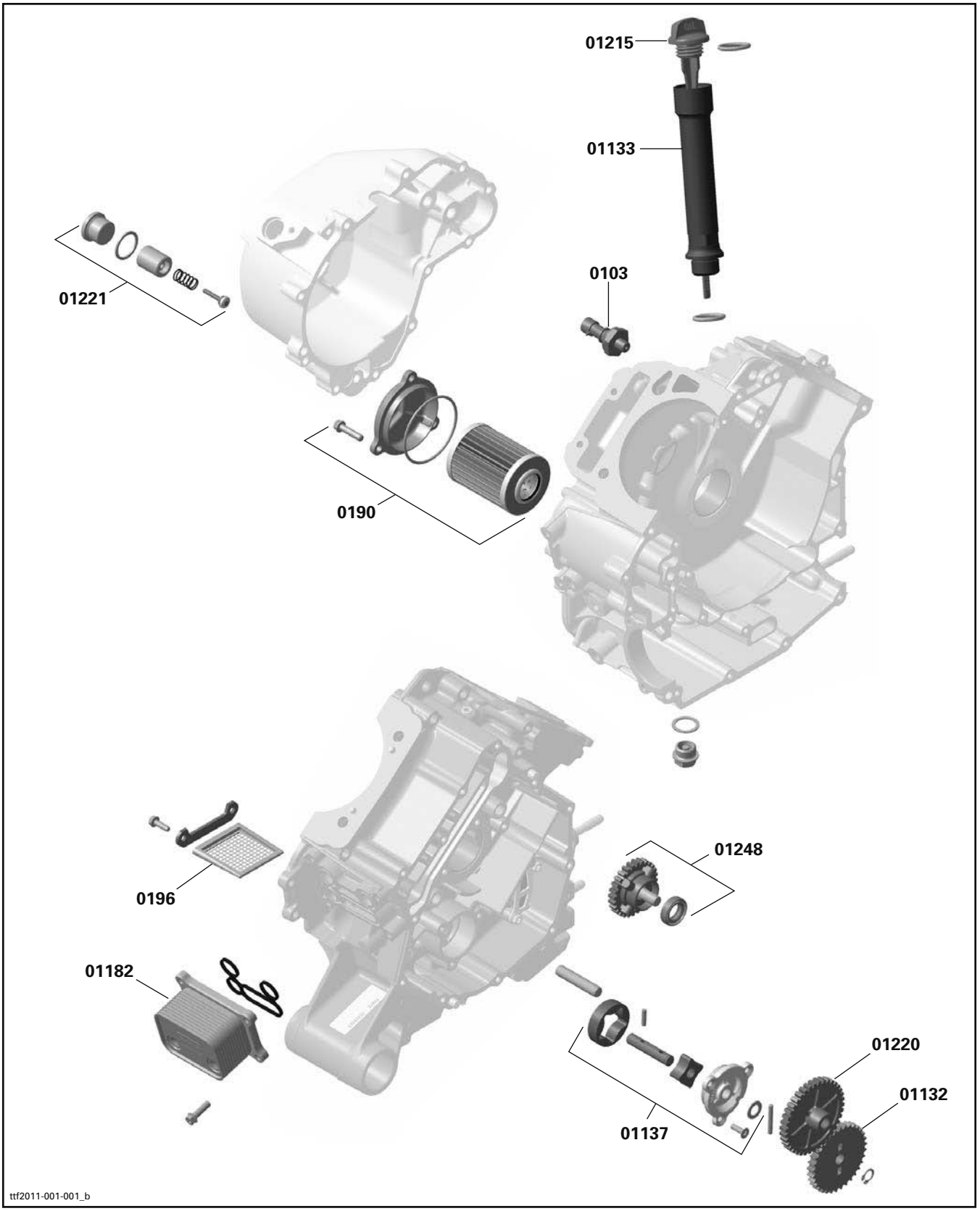
01215
01133
0103
01221
0190
01248
0196
01182
01220
01132
01137
ttf2011-001-001_b

1000

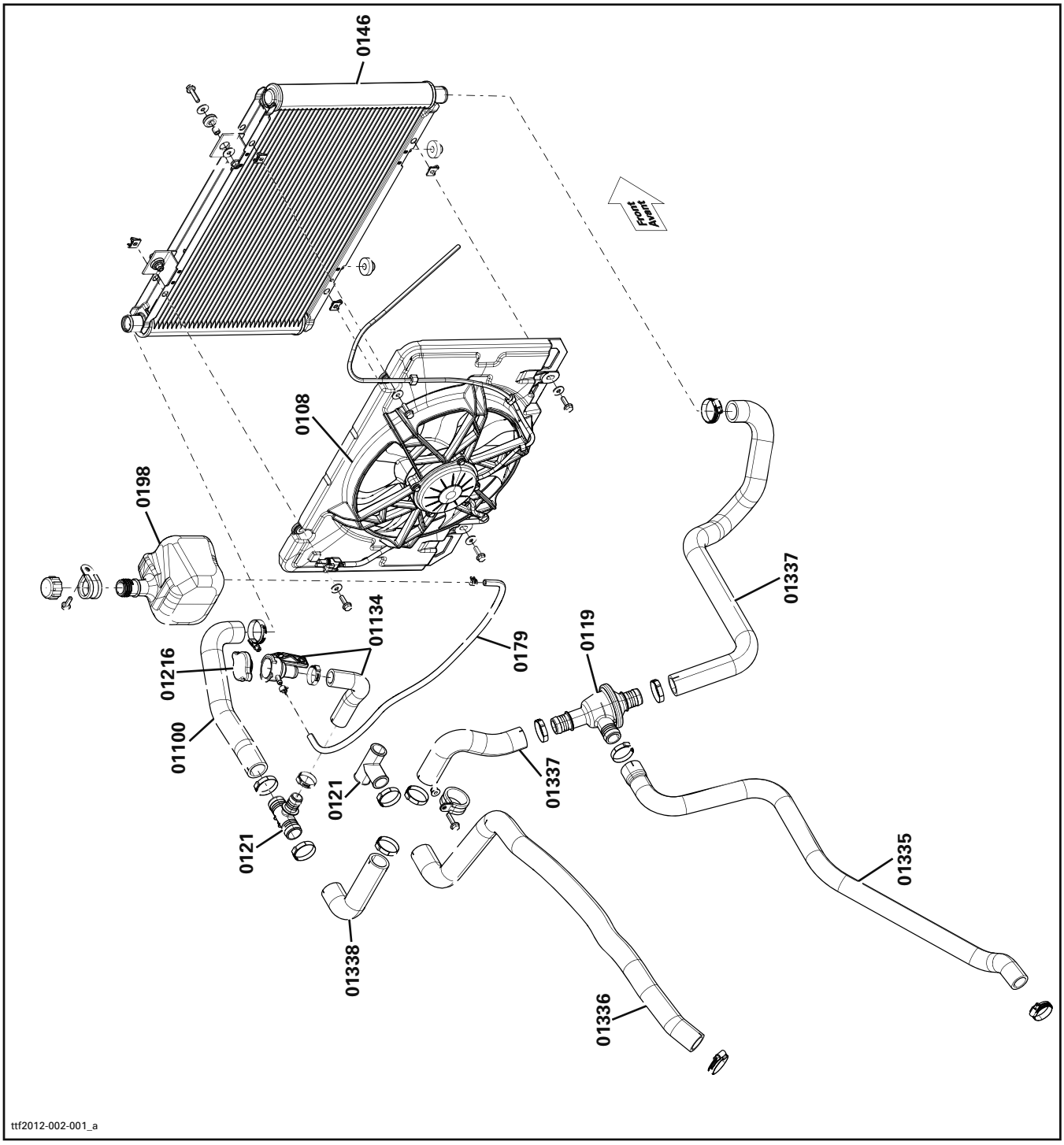
0146
Front
Avant
0108
0198
01337
01134
0179
0119
01216
01100
01337
0121
0121
01335
01338
01336
ttf2012-002-001_a

800

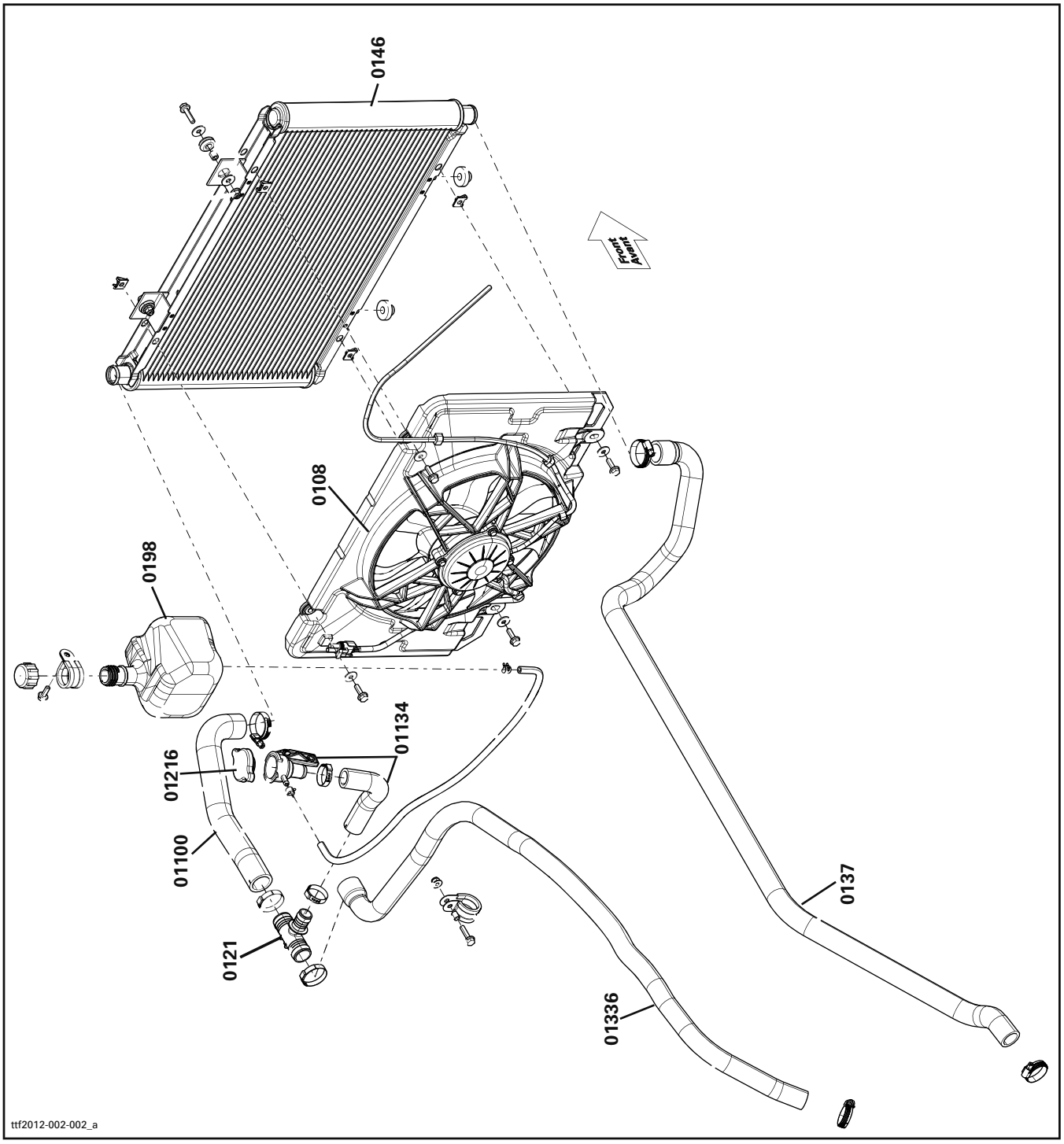
0146
Front
Avant
0108
0198
01134
01216
01100
0121
0137
01336
ttf2012-002-002_a

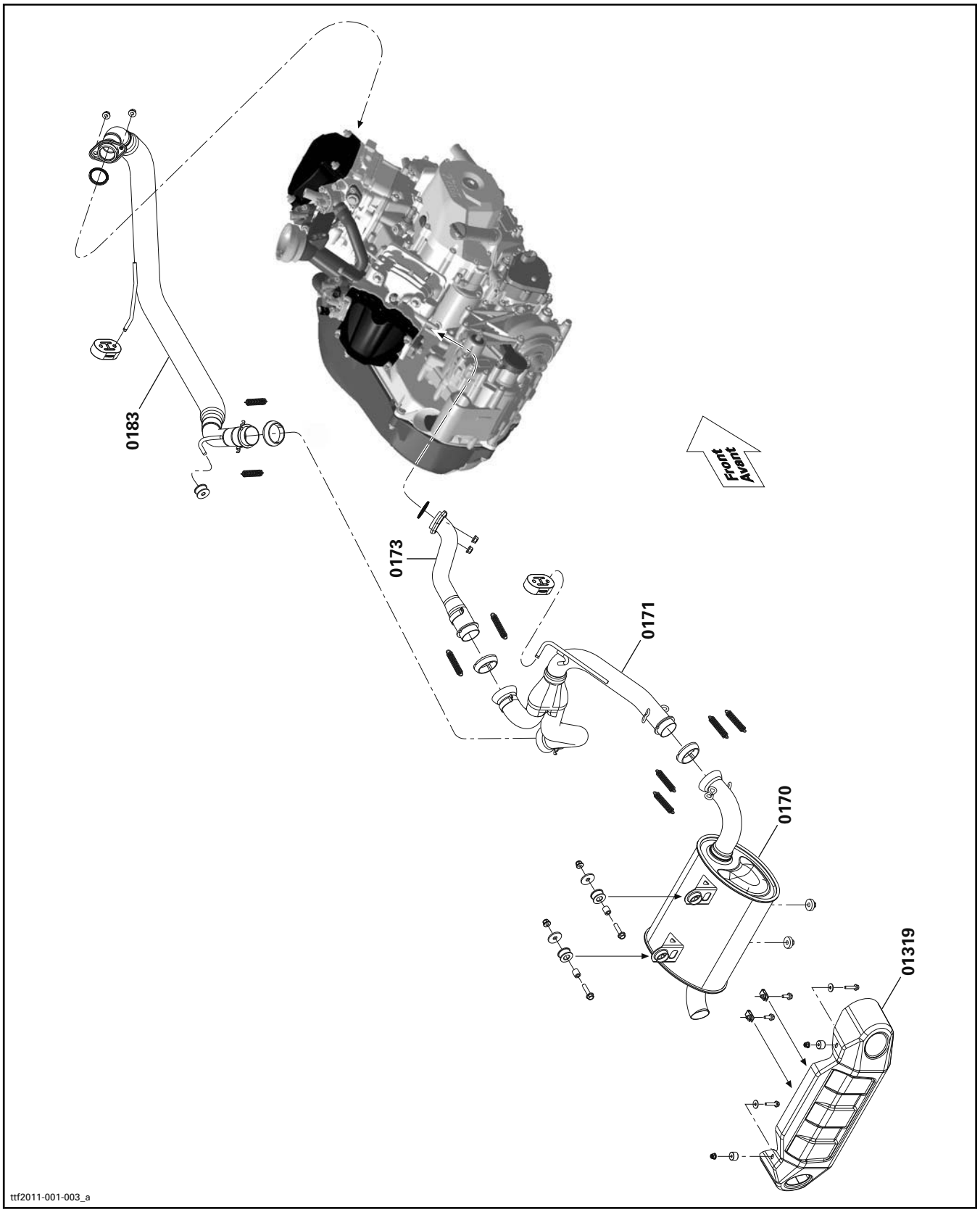
0183
0173
0171
0170
01319
FRONT
AVANT
ttf2011-001-003_a

800/1000

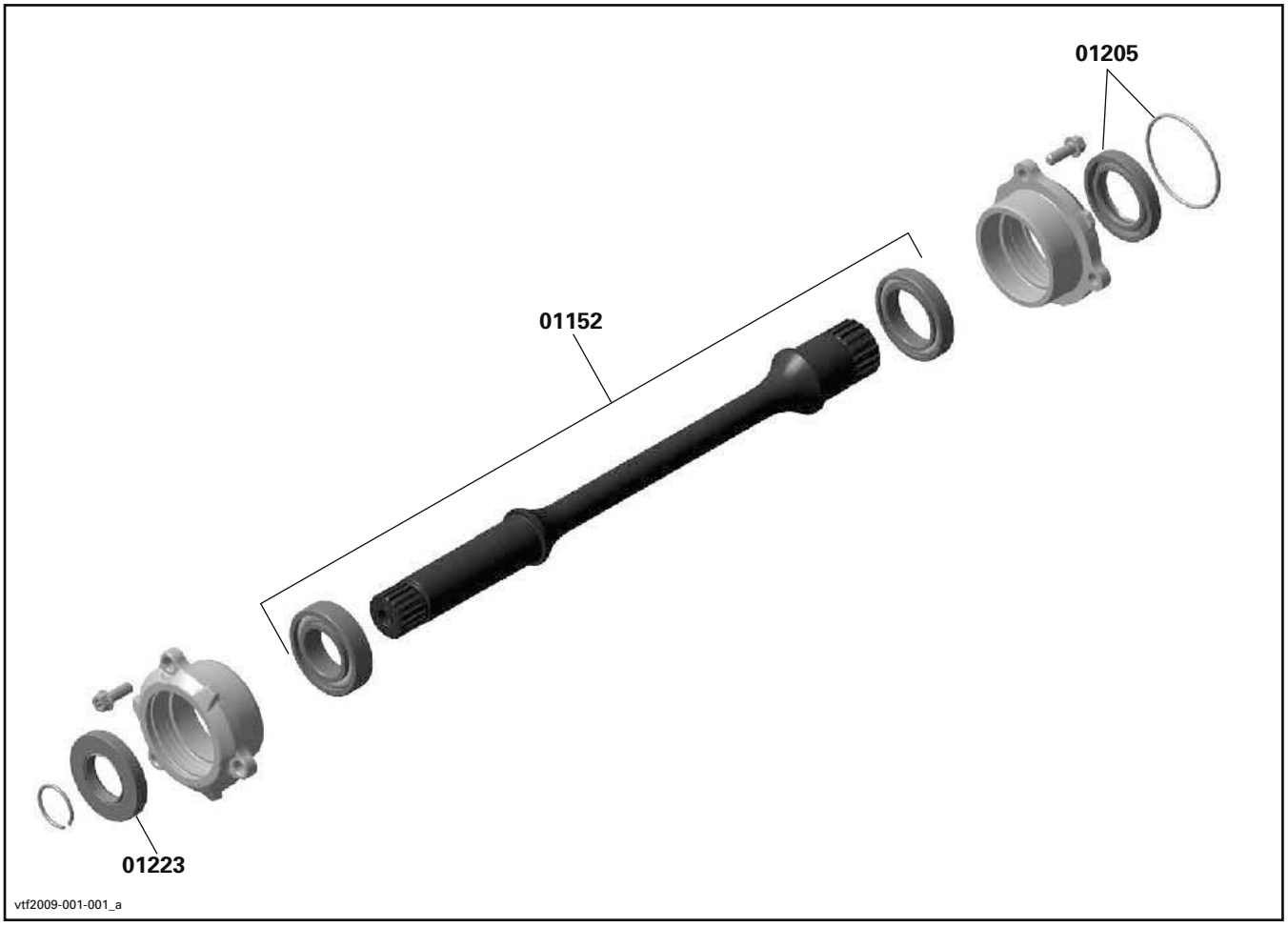

SYSTEM SYSTÈME	CODE	DESCRIPTION	COMMANDER 800	COMMANDER 1000	COMMANDER LTD 1000
			1	2	3
02	00	**NO LABOR INVOLVED AUCUNE MAIN D'OEUVRE**	0	0	0
02	01	AIR INTAKE SILENCER (ASS'Y) SILENCIEUX D'ADMISSION D'AIR (COMPLET)	1.1	1.1	1.1
02	16	INTAKE ADAPTOR ADAPTATEUR D'ADMISSION	0.7	0.7	0.7
02	19	AIR INTAKE TUBE TUYAU D'ADMISSION D'AIR	0.4	0.4	0.4
02	23	REAR AIR INTAKE TUBE AND/OR SLEEVE TUYAU D'ADMISSION D'AIR ARRIÈRE ET/OU DOUILLE	0.7	0.7	0.7
02	46	AIR TEMPERATURE SENSOR CAPTEUR DE TEMPÉRATURE D'AIR	0.6	0.6	0.6
02	57	FUEL FILTER FILTRE À ESSENCE	0.9	0.9	0.9
02	58	FUEL TANK RÉSERVOIR D'ESSENCE	1.1	1.1	1.1
02	59	INTAKE COVER AND/OR SEAL COUVERCLE D'ADMISSION ET/OU JOINT D'ÉTANCHÉITÉ	0.3	0.3	0.3
02	60	FUEL CAP BOUCHON DU RÉSERVOIR À ESSENCE	0.3	0.3	0.3
02	69	AIR FILTER FILTRE À AIR	0.3	0.3	0.3
02	72	INTAKE MANIFOLD CONNECTEUR D'ADMISSION	1.1	1.1	1.1
02	79	FUEL RAIL (1 OR 2) RAMPE D'ESSENCE (1 OU 2)	1.0	1.0	1.0
02	80	INJECTOR (ALL) INJECTEUR (TOUS)	1.0	1.0	1.0
02	81	THROTTLE BODY (ASS'Y) CARTER ACCÉLÉRATEUR (COMPLET)	1.1	1.1	1.1
02	89	FUEL PUMP MODULE MODULE POMPE À ESSENCE	0.9	0.9	0.9
02	94	FEMALE QUICK FITTING CONNECTEUR RAPIDE FEMELLE	0.4	0.4	0.4
02	99	FUEL INJECTION HOSE (ASS'Y) BOYAU À INJECTION D'ESSENCE (COMPLET)	0.8	0.8	0.8
02	112	AIR SILENCER SUPPORT SUPPORT DU SILENCIEUX D'ADMISSION	0.7	0.7	0.7
02	115	PLENUM CHAMBRE D'AIR	1.1	1.1	1.1
02	119	CHECK VALVE SOUPAPE DE RETENUE	0.3	0.3	0.3

INTAKE AND FUEL SYSTEM
ADMISSION ET SYSTÈME D'ALIMENTATION D'ESSENCE

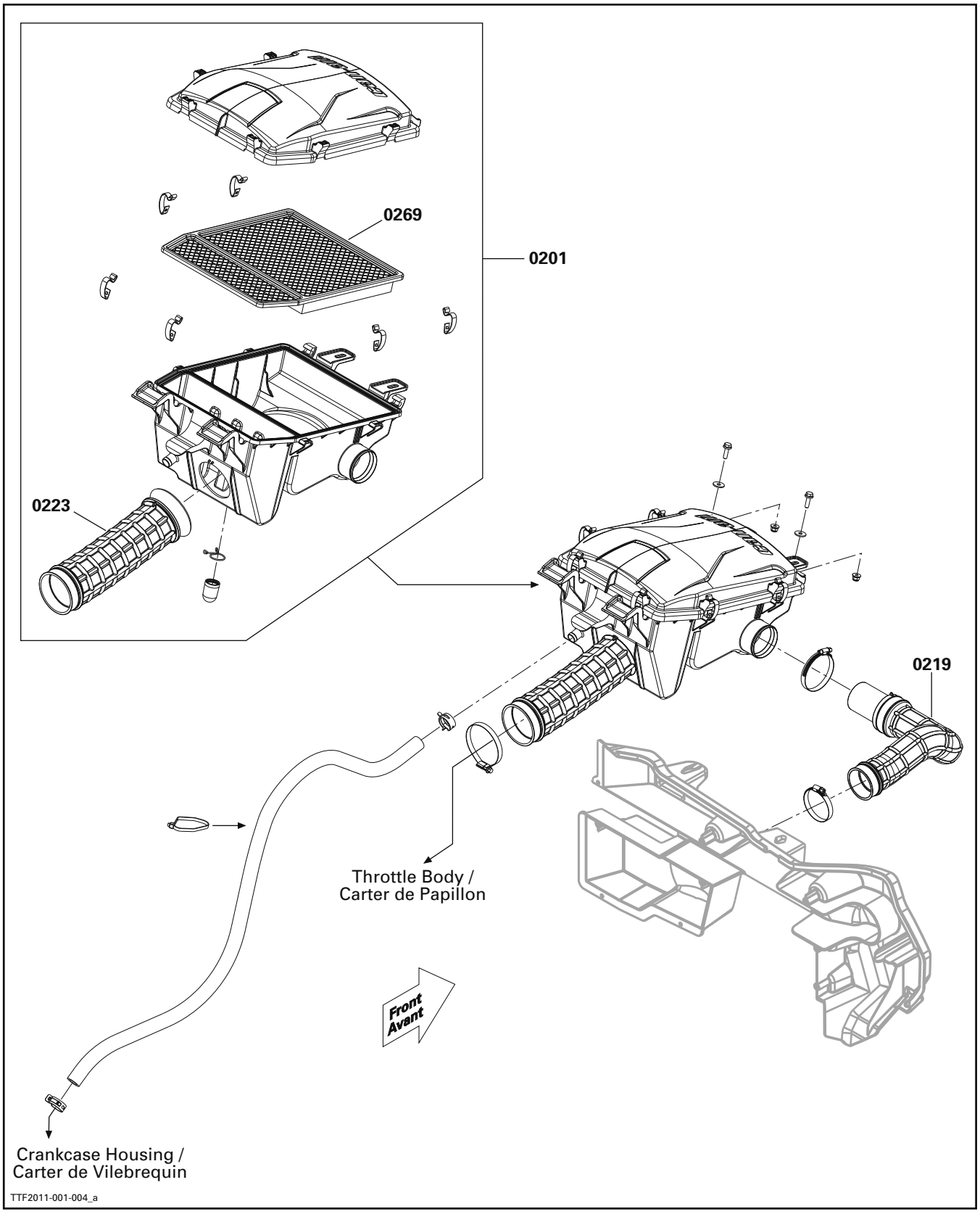

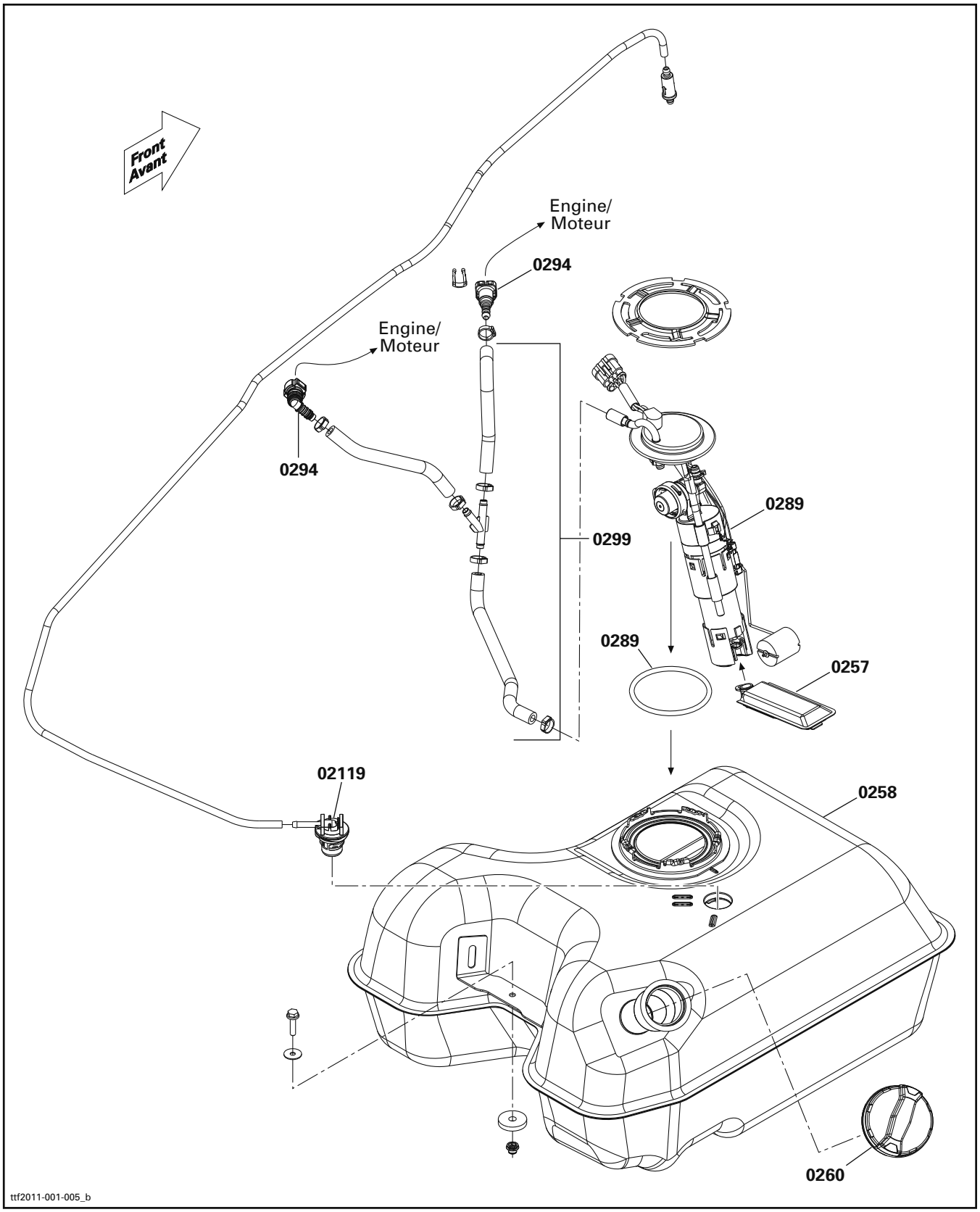
Front
Avant
Engine/
Moteur
0294
Engine/
Moteur
0294
0289
0299
0289
0257
02119
0258
0260
ttf2011-001-005_b

INTAKE AND FUEL SYSTEM
ADMISSION ET SYSTÈME D'ALIMENTATION D'ESSENCE

1000

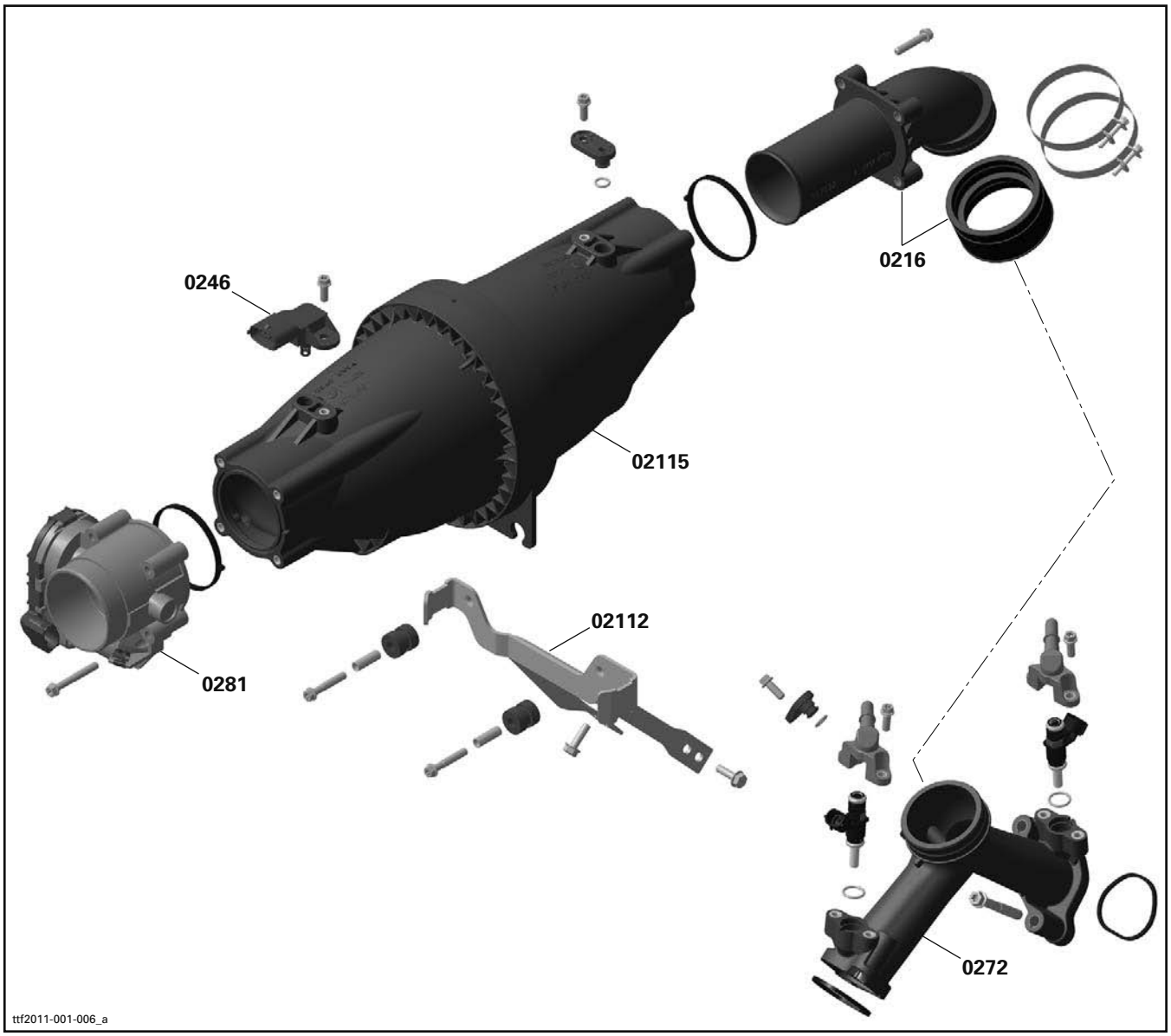

SYSTEM SYSTÈME	CODE	DESCRIPTION	COMMANDER 800	COMMANDER 1000	COMMANDER LTD 1000
			1	2	3
03	**00**	**NO LABOR INVOLVED AUCUNE MAIN D'OEUVRE**	**0**	**0**	
03	02	MAGNETO (ASS'Y) MAGNÉTO (COMPLET)	2.3	2.3	2.3
03	08	IGNITION COIL (EACH) BOBINE D'ALLUMAGE (CHAQUE)	0.5	0.5	0.5
03	10	IGNITION CABLE CÂBLE D'ALLUMAGE	0.4	0.4	0.4
03	27	STATOR (ASS'Y) STATOR (COMPLET)	2.1	2.1	2.1

800/1000

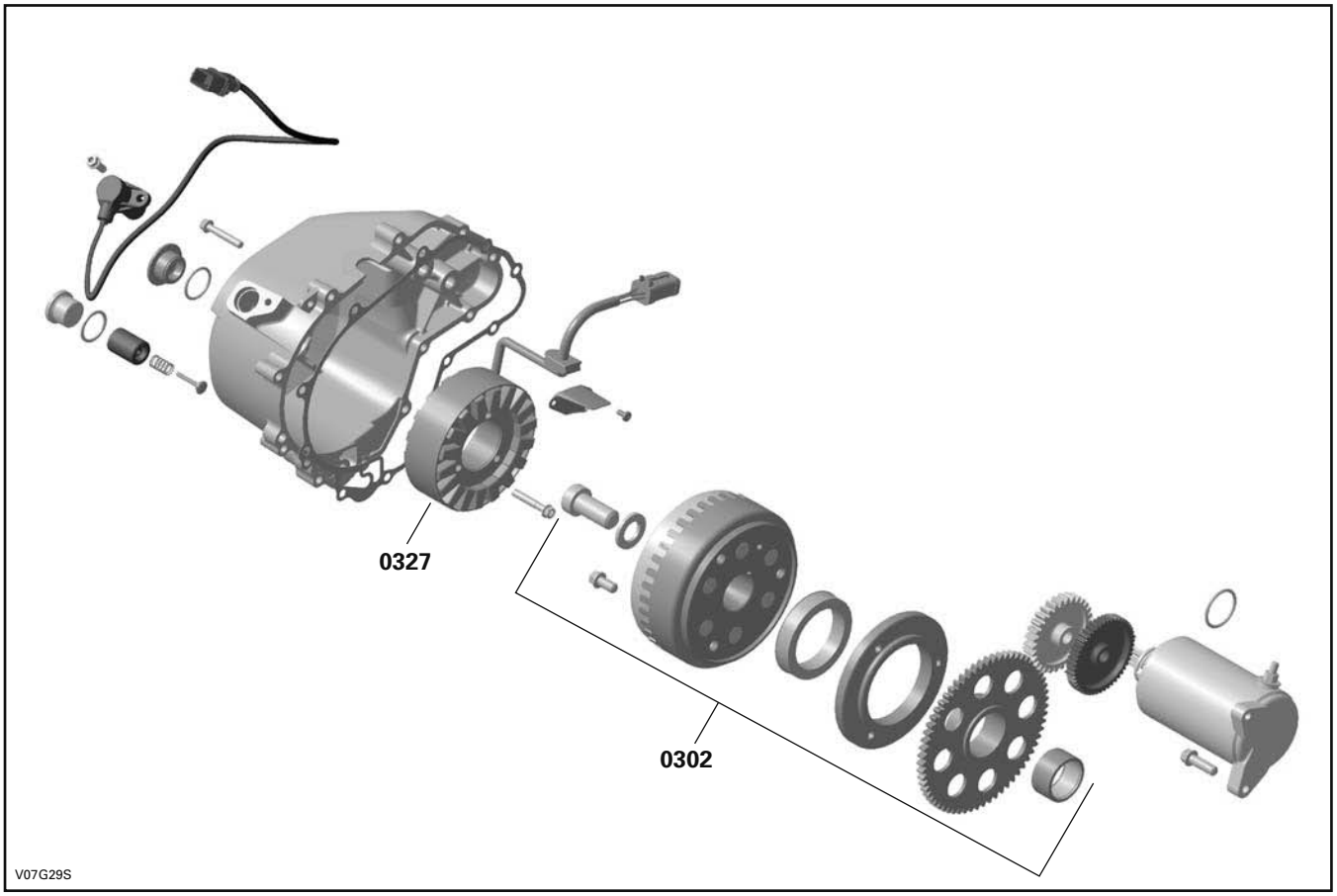

SYSTEM SYSTÈME	CODE	DESCRIPTION	COMMANDER 800	COMMANDER 1000	COMMANDER LTD 1000
			1	2	3
04	**00**	**NO LABOUR INVOLVED AUCUNE MAIN-D'OEUVRE**	**0**	**0**	**0**
04	02	ELECTRIC STARTER (ASS'Y) DÉMARREUR (COMPLET)	0.6	0.6	0.6
04	03	STARTER RELAY SOLÉNOÏDE DE DÉMARRAGE	0.3	0.3	0.3
04	19	STARTER DRIVE LANCEUR DÉMARREUR	2.3	2.3	2.3

TRANSMISSION AND LINKAGE SYSTEM
SYSTÈME DE TRANSMISSION ET DE TRINGLERIE

SYSTEM SYSTÈME	CODE	DESCRIPTION	COMMANDER 800	COMMANDER 1000	COMMANDER LTD 1000
			1	2	3
05	**00**	**NO LABOR INVOLVED AUCUNE MAIN-D'OEUVRE IMPLIQUÉE**	**0**	**0**	**0**
05	12	DRIVEN PULLEY SLIDING HALF DEMI-POULIE MENÉE COULISSANTE	1.3	1.3	1.3
05	19	BELT COURROIE	1.2	1.2	1.2
05	55	LEVER BUTTON BOUTON DE LEVIER	0.3	0.3	0.3
05	56	LEVER (ASS'Y) AND/OR LEVER SPRING LEVIER (COMPLET) ET/OU RESSORT DE LEVIER	0.6	0.6	0.6
05	59	SPEED SENSOR CAPTEUR DE VITESSE	0.4	0.4	0.4
05	66	GEARSHIFT LEVER LEVIER D'EMBRAYAGE	0.5	0.5	0.5
05	78	CVT COVER COUVERCLE CVC	1.1	1.1	1.1
05	79	GASKET JOINT D'ÉTANCHÉITÉ	1.1	1.1	1.1
05	80	GOVERNOR CUP COUPOLE RÉGULATEUR	1.4	1.4	1.4
05	81	ONE WAY CLUTCH, FLANGE, RING, SPRING EMBRAYAGE À ROUE LIBRE, FLASQUE, ANNEAU, RESSORT	1.4	1.4	1.4
05	82	DRIVE PULLEY (ASS'Y) POULIE MOTRICE (COMPLET)	1.5	1.5	1.5
05	83	DRIVE PULLEY FIXED HALF POULIE MOTRICE FIXE	1.5	1.5	1.5
05	84	DRIVEN PULLEY OUTER CAM AND/OR SPRING CAME DE POULIE MENÉE EXTERNE ET/OU RESSORT	1.3	1.3	1.3
05	85	CENTRIFUGAL LEVER LEVIER CENTRIFUGE	1.6	1.6	1.6
05	86	SLIDER SHOES GLISSIÈRES	1.4	1.4	1.4
05	89	REMOVE AND REPLACE TRANSMISSION ASS'Y REMPLACEMENT DE LA TRANSMISSION (COMPLET)	5.9	5.9	5.9
05	91	MAIN SHAFT (ASS'Y) ARBRE DE RENVOI (COMPLET)	6.5	6.5	6.5
05	95	AIR INTAKE (CVT) ENTRÉE D'AIR (CVC)	0.5	0.5	0.5
05	96	AIR OUTLET (CVT) SORTIE D'AIR (CVC)	0.5	0.5	0.5
05	97	FLEXIBLE ADAPTOR ADAPTATEUR FLEXIBLE	0.5	0.5	0.5

SYSTEM SYSTÈME	CODE	DESCRIPTION	COMMANDER 800	COMMANDER 1000	COMMANDER LTD 1000
			1	2	3
05	98	CAM, PLATE, DRIVEN SHAFT, SPRING CAME, PLAQUE, ARBRE POULIE MENÉE, RESSORT	1.3	1.3	1.3
05	99	OUTPUT SHAFT ARBRE DE SORTIE	6.4	6.4	6.4
05	100	REAR OUTPUT SHAFT SEALS ANNEAUX ÉTANCHÉITÉ DE L'ARBRE DE SORTIE ARRIÈRE	6.2	6.2	6.2
05	101	GEARS BOX (ASS'Y)/MAIN SHAFT BOÎTE D'ENGRENAGE (COMPLET)/ARBRE PRINCIPAL	6.7	6.7	6.7
05	102	SHIFT SHAFT (ASS'Y) ARBRE D'EMBRAYAGE (COMPLET)	6.7	6.7	6.7
05	104	INDEX LEVER (ASS'Y) LEVIER D'INDEXATION (COMPLET)	6.7	6.7	6.7
05	105	MAIN SHAFT SEAL JOINT D'ÉTANCHÉITÉ DE L'ARBRE PRINCIPAL	1.9	1.9	1.9
05	107	SPACER AND/OR O-RING ENTRETOISE ET/OU JOINT TORIQUE	0.8	0.8	0.8
05	108	ACTUATOR AND/OR FORK AND/OR SEAL ACTUATEUR ET/OU FOURCHETTE ET/OU JOINT D'ÉTANCHÉITÉ	0.8	0.8	0.8
05	109	FORK AND/OR PIN FOURCHETTE ET/OU GOUPILLE	1.2	1.2	1.2
05	110	CENTER HOUSING GEAR AND/OR BEARING LOGEMENT DE TRANSMISSION CENTRE ET/OU ROULEMENT	6.7	6.7	6.7
05	111	RH HOUSING GEAR AND/OR BEARING LOGEMENT DE TRANSMISSION DROIT ET/OU ROULEMENT	6.6	6.6	6.6
05	113	SHIFTING SWITCH INTERRUPTEUR D'EMBRAYAGE	0.6	0.6	0.6
05	115	CVT AIR GUIDE AND/OR O-RINGS GUIDE D'AÉRATION ET/OU JOINT D'ÉTANCHÉITÉ	1.6	1.6	1.6
05	120	GEARBOX POSITION SENSOR CAPTEUR DE POSITION D'ENGRENAGE	0.4	0.4	0.4
05	159	PRIMARY INLET AND/OR ADAPTER ENTRÉE PRIMAIRE ET/OU ADAPTATEUR	0.3	0.3	0.3
05	160	FILTER FILTRE	0.3	0.3	0.3
05	161	SHIFTING CABLE CÂBLE D'EMBRAYAGE	1.1	1.1	1.1

TRANSMISSION AND LINKAGE SYSTEM
SYSTÈME DE TRANSMISSION ET DE TRINGLERIE

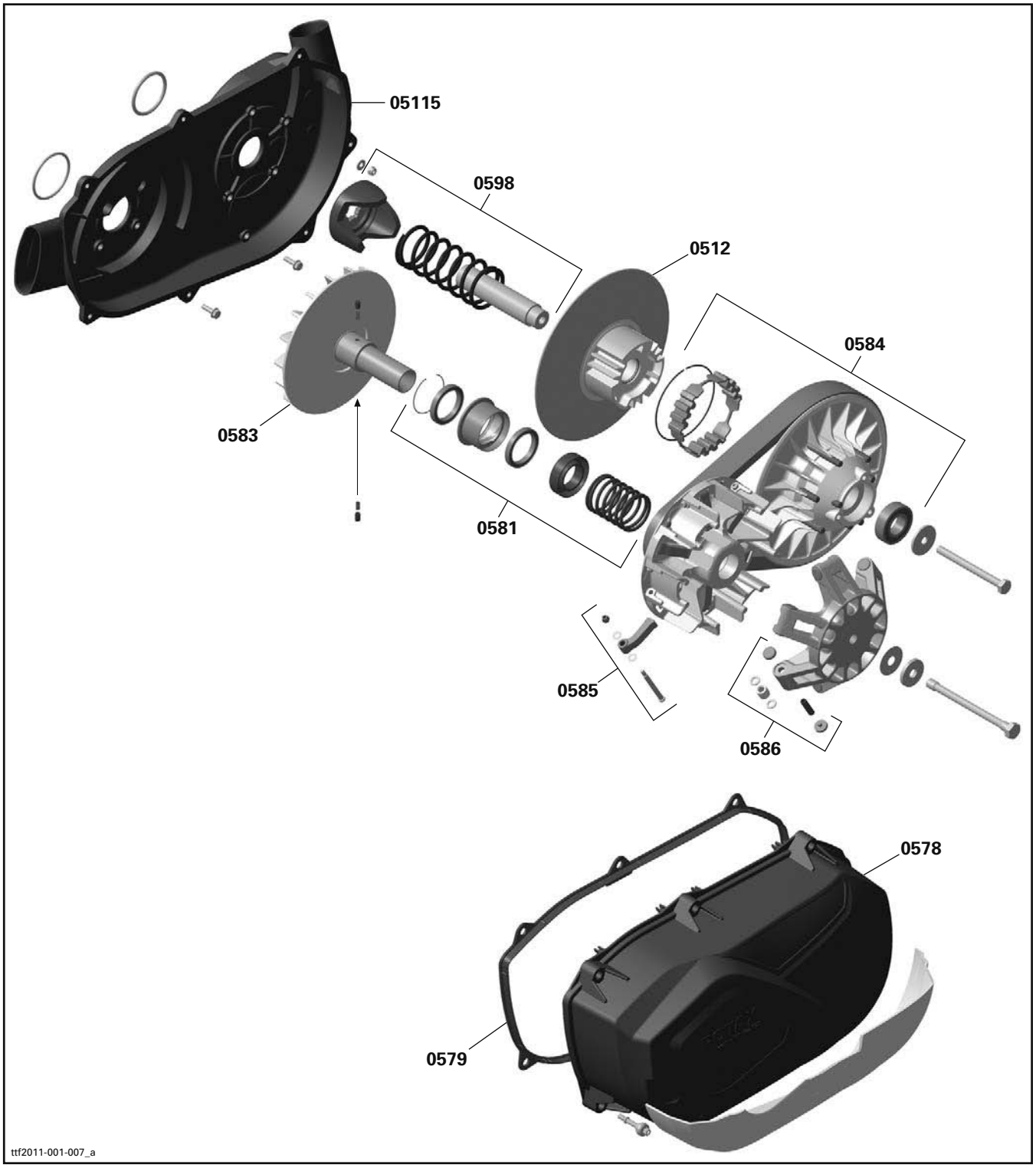

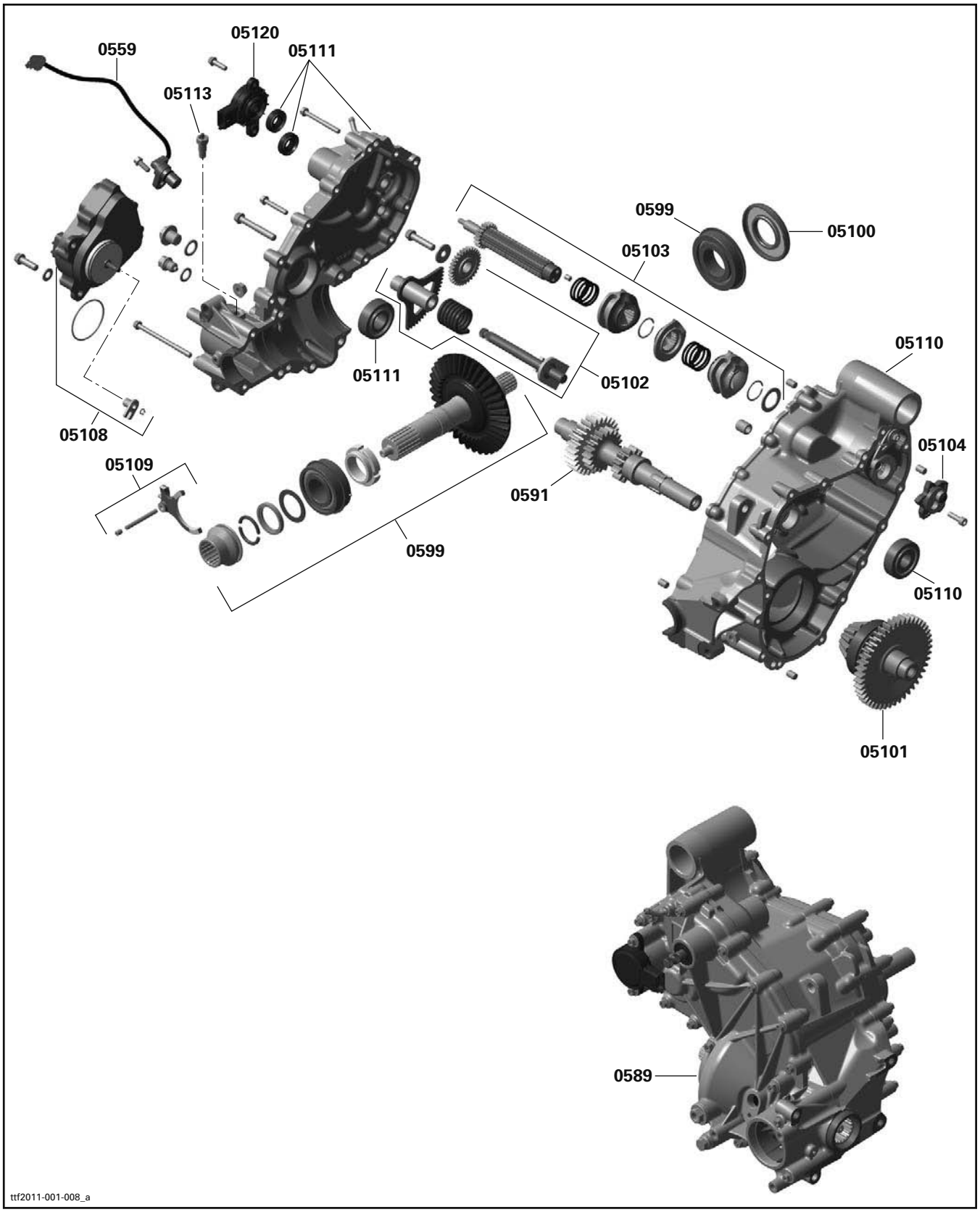
0559
05120
05111
05113
0599
05100
05103
05111
05102
05110
05108
05104
05109
0591
0599
05110
05101
0589
ttf2011-001-008_a

TRANSMISSION AND LINKAGE SYSTEM
SYSTÈME DE TRANSMISSION ET DE TRINGLERIE

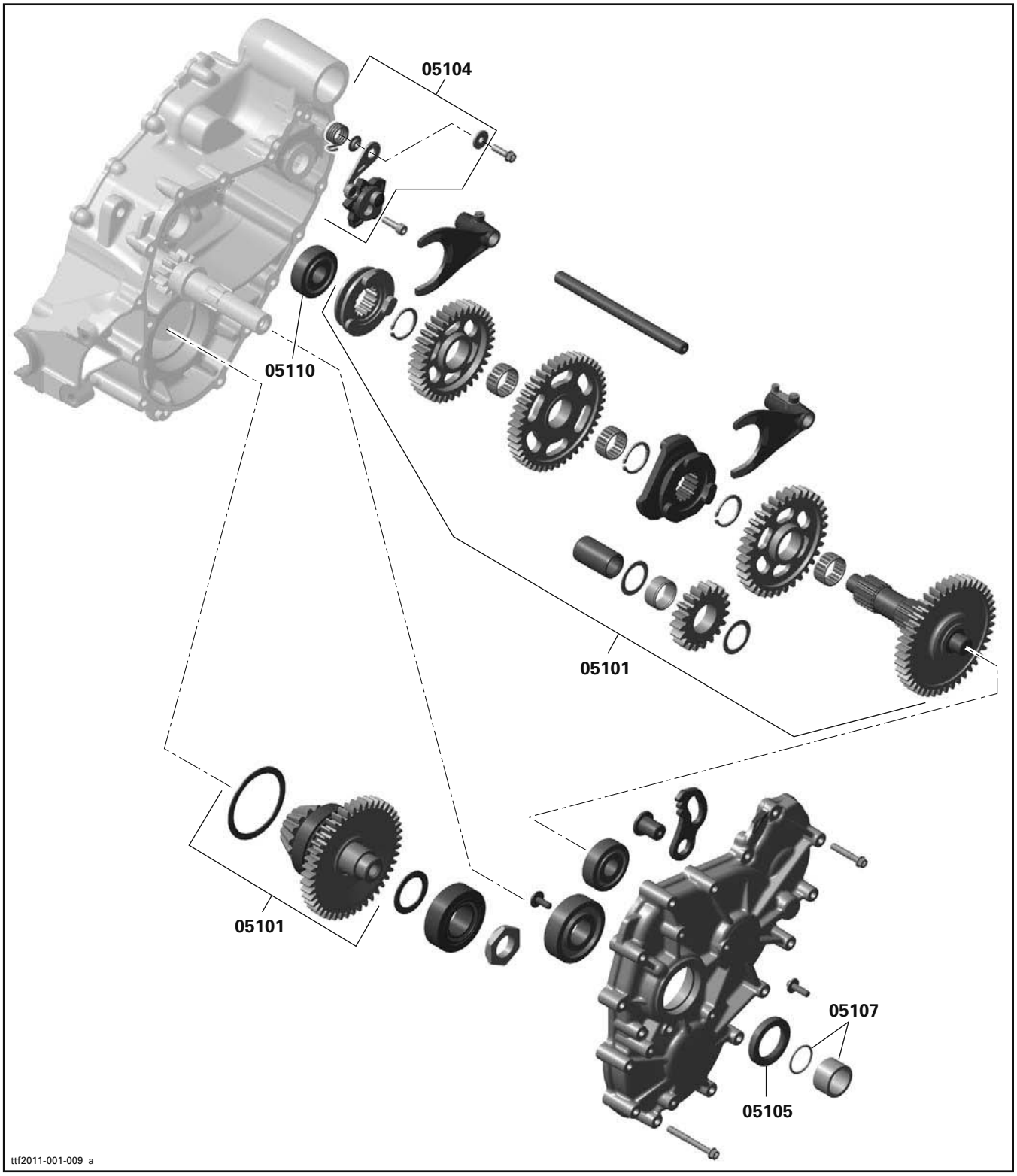

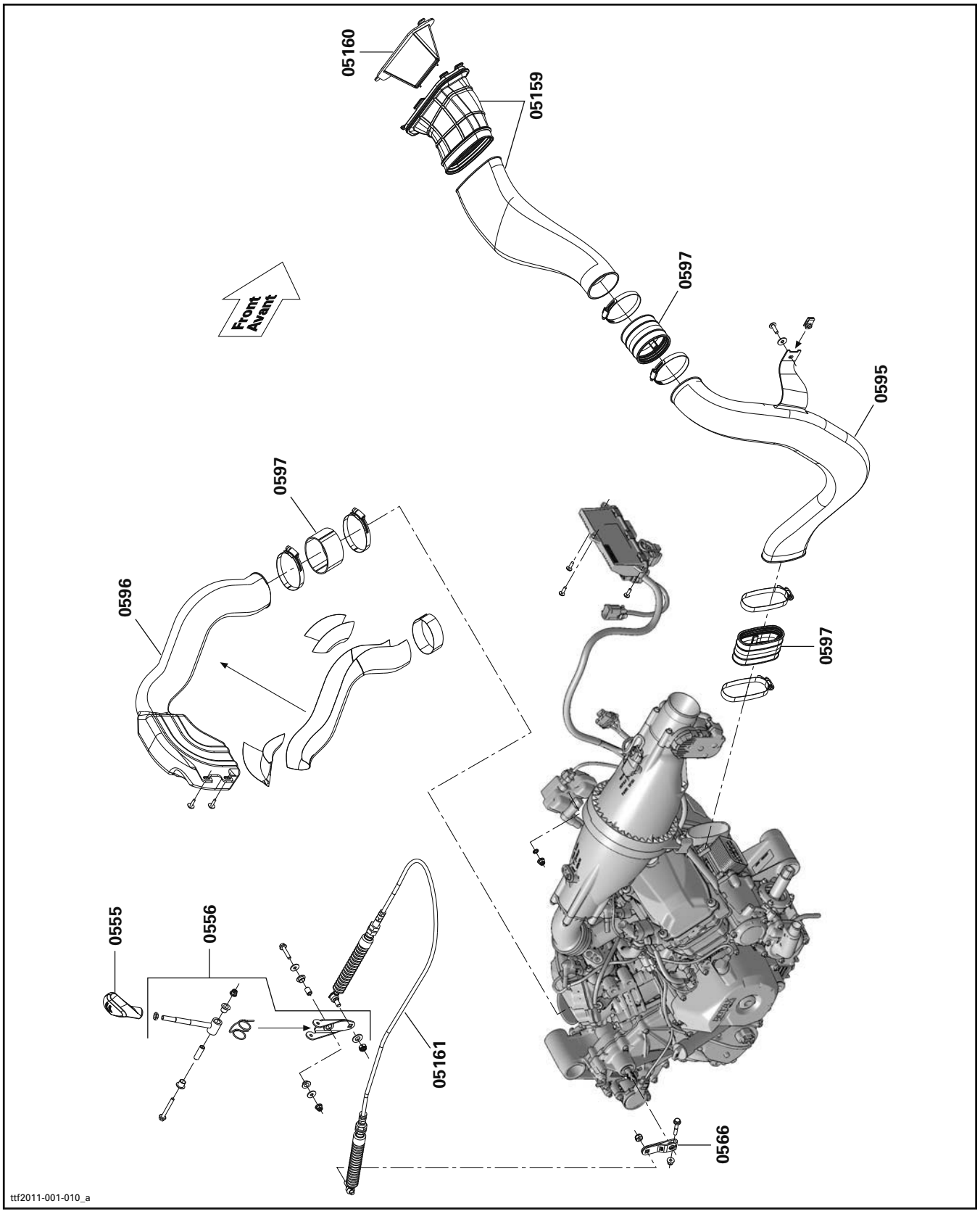
05160
05159
0597
Front
Avant
0595
0597
0596
0597
0555
0556
05161
0566
ttf2011-001-010_a

SYSTEM SYSTÈME	CODE	DESCRIPTION	COMMANDER 800	COMMANDER 1000	COMMANDER LTD 1000
			1	2	3
06	**00**	**NO LABOR INVOLVED AUCUNE MAIN-D'OEUVRE**	**0**	**0**	**0**
06	06	MASTER CYLINDER MAÎTRE-CYLINDRE	1.0	1.0	1.0
06	09	FRONT CALIPER (RH OR LH) ÉTRIER AVANT (DROIT OU GAUCHE)	0.5	0.5	0.5
06	10	FRONT BRAKE PAD (RH OR LH) PLAQUETTE DE FREIN AVANT (DROIT OU GAUCHE)	0.3	0.3	0.3
06	11	FRONT BRAKE DISC (RH OR LH) DISQUE DE FREIN AVANT (DROIT OU GAUCHE)	0.7	0.7	0.7
06	12	FRONT FLEXIBLE BRAKE HOSE BOYAU FLEXIBLE DE FREIN AVANT	0.8	0.8	0.8
06	19	BRAKE SWITCH INTERRUPTEUR DE FREIN	0.3	0.3	0.3
06	25	REAR BRAKE HOSE BOYAU DE FREIN ARRIÈRE	1.3	1.3	1.3
06	26	REAR CALIPER ÉTRIER ARRIÈRE	0.5	0.5	0.5
06	27	REAR BRAKE PAD PLAQUETTE DE FREIN ARRIÈRE	0.3	0.3	0.3
06	28	REAR BRAKE DISC DISQUE DE FREIN ARRIÈRE	0.7	0.7	0.7
06	34	MASTER CYLINDER RESERVOIR RÉSERVOIR DU MAÎTRE-CYLINDRE	0.5	0.5	0.5
06	35	BRAKE PEDAL PÉDALE DE FREIN	0.5	0.5	0.5
06	44	MASTER CYLINDER ROD TIGE DU MAÎTRE-CYLINDRE	0.4	0.4	0.4

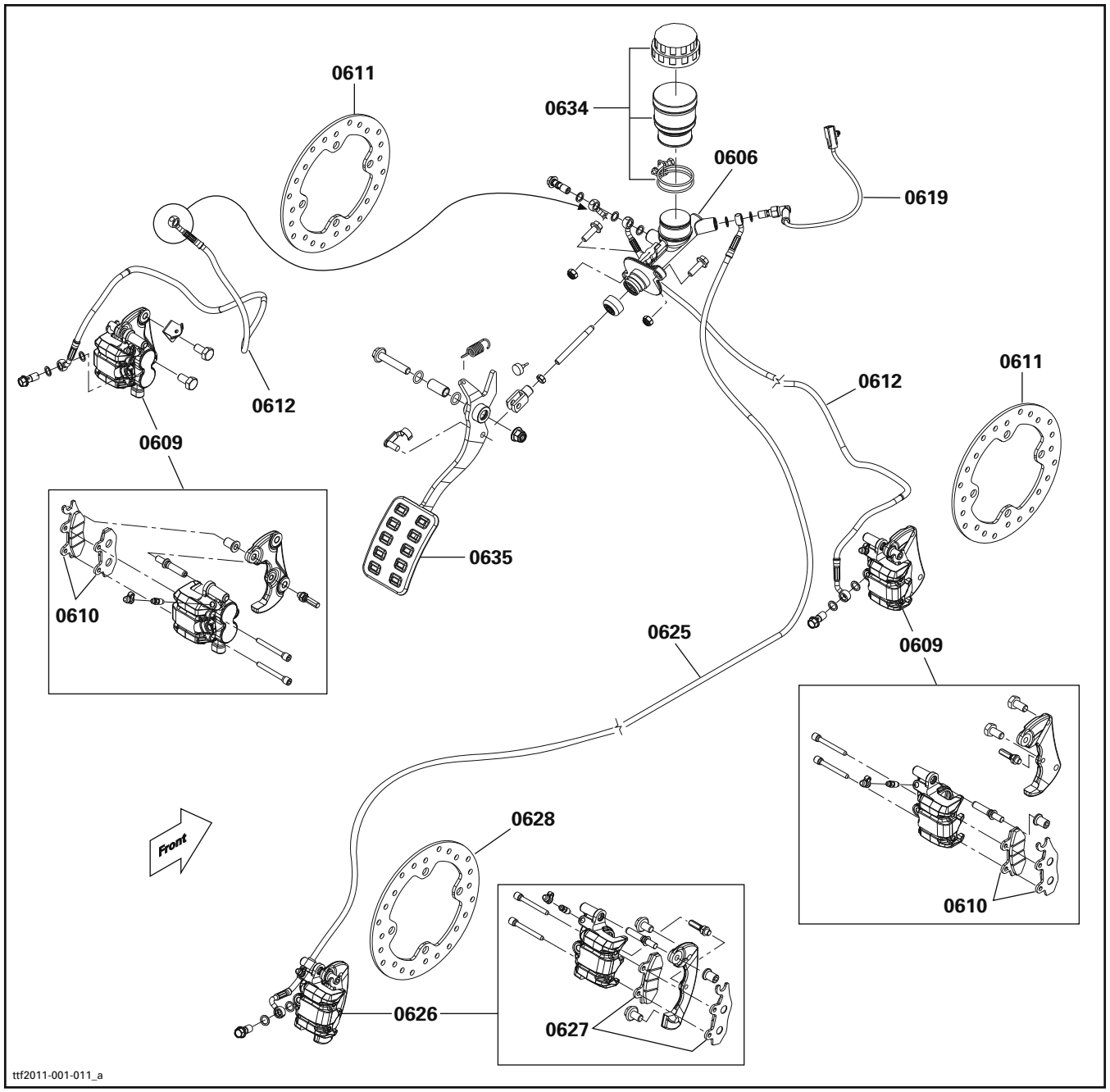
0611
0634
0606
0619
0612
0609
0610
0635
0612
0611
0625
0609
0610
0628
Front
0626
0627
ttf2011-001-011_a

STEERING - FRONT DRIVE SYSTEM AND SUSPENSION
DIRECTION - SYSTÈME D'ENTRAÎNEMENT AVANT ET SUSPENSION

SYSTEM SYSTÈME	CODE	DESCRIPTION	COMMANDER 800	COMMANDER 1000	COMMANDER LTD 1000
			1	2	3
07	**00**	**NO LABOR INVOLVED AUCUNE MAIN-D'OEUVRE**	**0**	**0**	**0**
07	04	ARM PROTECTOR (RH OR LH) PROTECTEUR DE BRAS (DROIT OU GAUCHE)	0.3	0.3	0.3
07	13	EXTERNAL BALL JOINT (RH OR LH) JOINT À ROTULE EXTERNE (DROIT OU GAUCHE)	0.8	0.8	0.8
07	24	MAIN TUBE TUBE PRINCIPAL	1.1	1.1	1.1
07	27	STEERING COVER COUVRE-GUIDON	0.3	0.3	0.3
07	32	LOWER ARM AND/OR BALL JOINT (RH OR LH) BRAS INFÉRIEUR ET/OU JOINT À ROTULE (DROIT OU GAUCHE)	0.7	0.7	0.7
07	33	UPPER ARM (RH OR LH) BRAS DE SUSPENSION SUPÉRIEUR (DROIT OU GAUCHE)	0.7	0.7	0.7
07	37	FRONT SHOCK AND/OR SPRING AND/OR STOPPER AND/OR PROTECTOR AND/OR SEAT (RH OR LH) AMORTISSEUR AVANT ET/OU RESSORT ET/OU BUTÉE ET/OU SIÈGE ET/OU PROTECTEUR (DROIT OU GAUCHE)	0.4	0.4	0.4
07	39	STABILIZER BAR BARRE STABILISATRICE		0.4	
07	40	FRONT DIFFERENTIEL (ASS'Y) DIFFÉRENTIEL AVANT (COMPLET)	2.8	2.8	2.8
07	42	FRONT PROPELLER SHAFT (ASS'Y) ARBRE DE PROPULSION AVANT (COMPLET)	2.0	2.0	2.0
07	45	CV JOINT (RH OR LH) JOINT HOMOCINÉTIQUE (DROIT OU GAUCHE)	0.7	0.7	0.7
07	46	FRONT WHEEL HUB (SEAL AND/OR BEARING) (RH OR LH) MOYEU DE ROUE AVANT (JOINT ET/OU ROULEMENT) (DROIT OU GAUCHE)	0.3	0.3	0.3
07	47	KNUCKLE (RH OR LH) PORTE-FUSÉE (DROIT OU GAUCHE)	0.7	0.7	0.7
07	50	FRONT RIM AND/OR TIRE JANTE AVANT ET/OU PNEU	0.4	0.4	0.4
07	64	DOUBLE BALL JOINT JOINT À ROTULE DOUBLE		0.3	0.3
07	72	INTERNAL BUSHING AND/OR CUSHION (LOWER AND/OR UPPER ARM) (RH OR LH) DOUILLE INTERNE ET/OU COUSSIN (BRAS INFÉRIEUR ET/OU SUPÉRIEUR) (DROIT OU GAUCHE)	0.4	0.4	0.4
07	80	FRONT RIM JANTE AVANT	0.4	0.4	0.4
07	85	RING GEAR AND/OR CARRIER AND/OR SHIM COURONNE DE LANCEMENT ET/OU SUPPORT ET/OU CALE	3.3	3.3	3.3
07	88	RING GEAR DRIVE GEAR AND/OR BEARING AND/OR SHIM PIGNON DE COMMANDE DE LA COURONNE ET/OU ROULEMENT À BILLE ET/OU CALE	3.3	3.3	3.3

SYSTEM SYSTÈME	CODE	DESCRIPTION	COMMANDER 800	COMMANDER 1000	COMMANDER LTD 1000
			1	2	3
07	89	COVER AND/OR PINION COVER AND/OR SEAL AND/OR BEARING COUVERCLE ET/OU COUVERCLE DE PIGNON ET/OU JOINT D'ÉTANCHÉITÉ ET/OU ROULEMENT À BILLE	3.6	3.6	3.6
07	90	BOOT WHEEL KIT AND/OR CV JOINT (RH OR LH) ENSEMBLE DE SOUFFLET DE ROUE ET/OU JOINT CV (DROIT OU GAUCHE)	0.8	0.8	0.8
07	91	BOOT DIFFERENTIAL KIT AND/OR PLUNGING JOINT (RH OR LH) ENSEMBLE DE SOUFFLET DE DIFFÉRENTIEL ET/OU JOINT PLONGEANT (DROIT OU GAUCHE)	0.8	0.8	0.8
07	92	SLEEVE AND/OR WEARRING MANCHON ET/OU BAGUE D'USURE	3.1	3.1	3.1
07	99	POWER STEERING (DPS) SERVODIRECTION (DPS)	1.8	1.8	1.8
07	103	DIFFERENTIAL SEAL (1) JOINT D'ÉTANCHÉITÉ DU DIFFÉRENTIEL (1)	0.7	0.7	0.7
07	104	DIFFERENTIAL SEALS (2) JOINTS D'ÉTANCHÉITÉ DU DIFFÉRENTIEL (2)	1.4	1.4	1.4
07	106	STEERING COLUMN SUPPORT AND/OR BUSHINGS SUPPORT DE COLONNE DE DIRECTION ET/OU COUSSINETS	0.8	0.8	0.8
07	115	RACK AND PINION STEERING DIRECTION À CRÉMAILLÈRE	2.0	2.0	2.0
07	116	STEERING SHAFT ARBRE DU VOLANT	0.9	0.9	0.9
07	117	ADJUSTMENT CYLINDER CYLINDRE D'AJUSTEMENT	0.3	0.3	0.3
07	118	STEERING WHEEL VOLANT	0.3	0.3	0.3
07	120	DIFFERENTIAL OIL SEAL ANNEAU D'ÉTANCHÉITÉ DU DIFFÉRENTIEL	3.0	3.0	3.0
07	121	COUPLING MANCHON	1.8	1.8	1.8
07	122	HOSE (DIFFERENTIAL HOSE) BOYAU (BOYAU DU DIFFÉRENTIEL)	0.3	0.3	0.3

STEERING - FRONT DRIVE SYSTEM AND SUSPENSION
DIRECTION - SYSTÈME D'ENTRAÎNEMENT AVANT ET SUSPENSION

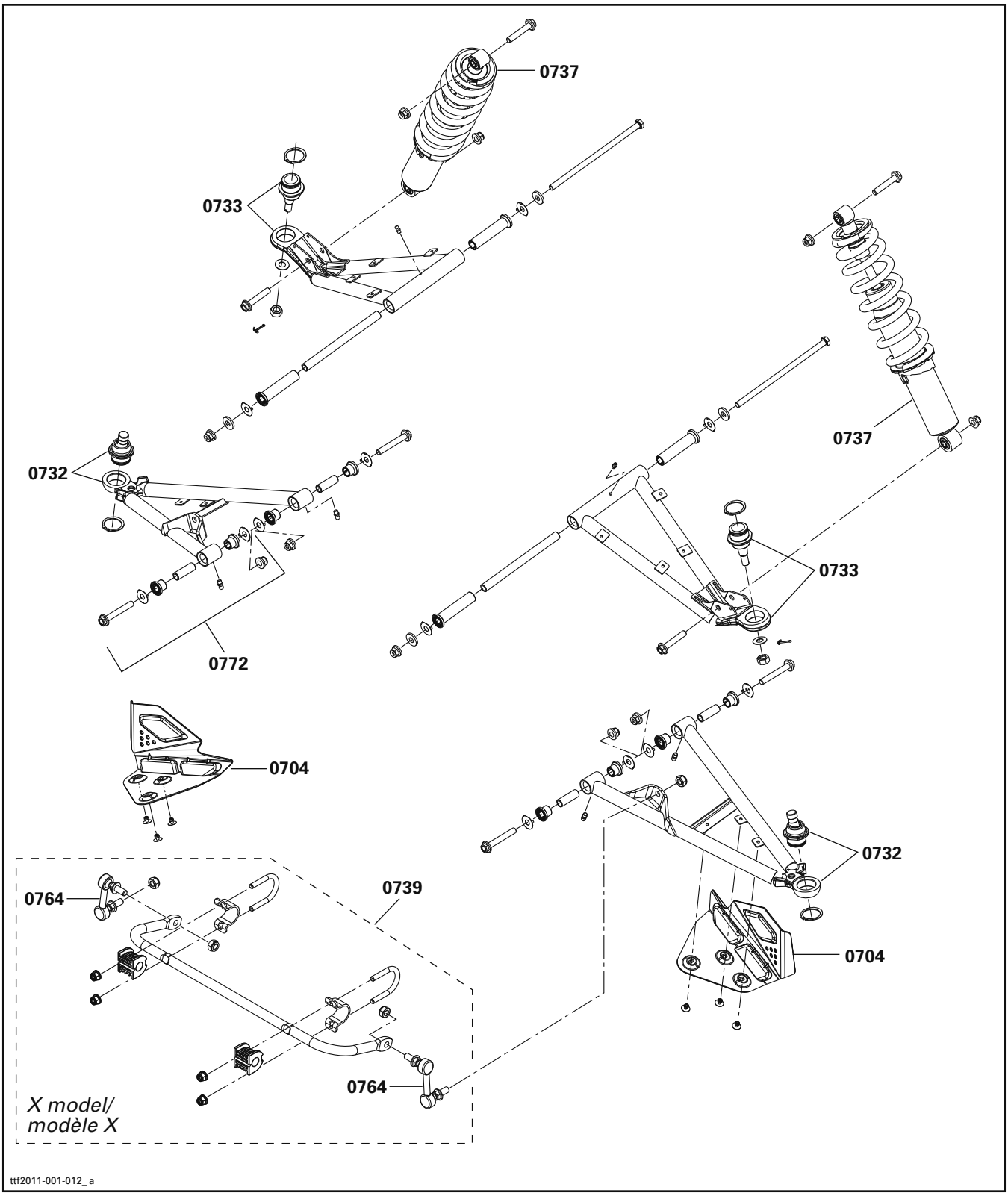

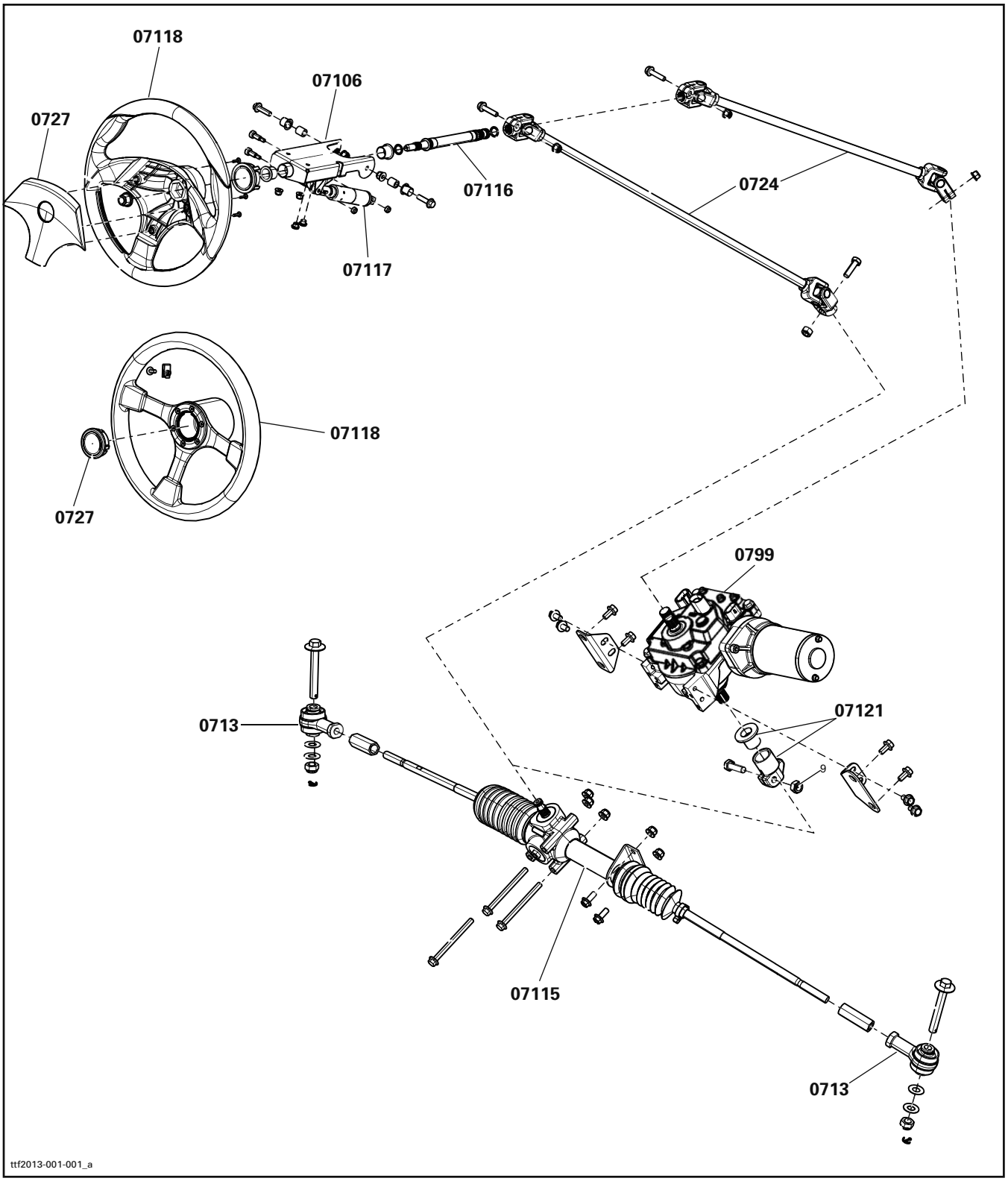
07118
07106
0727
07116
0724
07117
07118
0727
0799
0713
07121
07115
0713
ttf2013-001-001_a

STEERING - FRONT DRIVE SYSTEM AND SUSPENSION
DIRECTION - SYSTÈME D'ENTRAÎNEMENT AVANT ET SUSPENSION

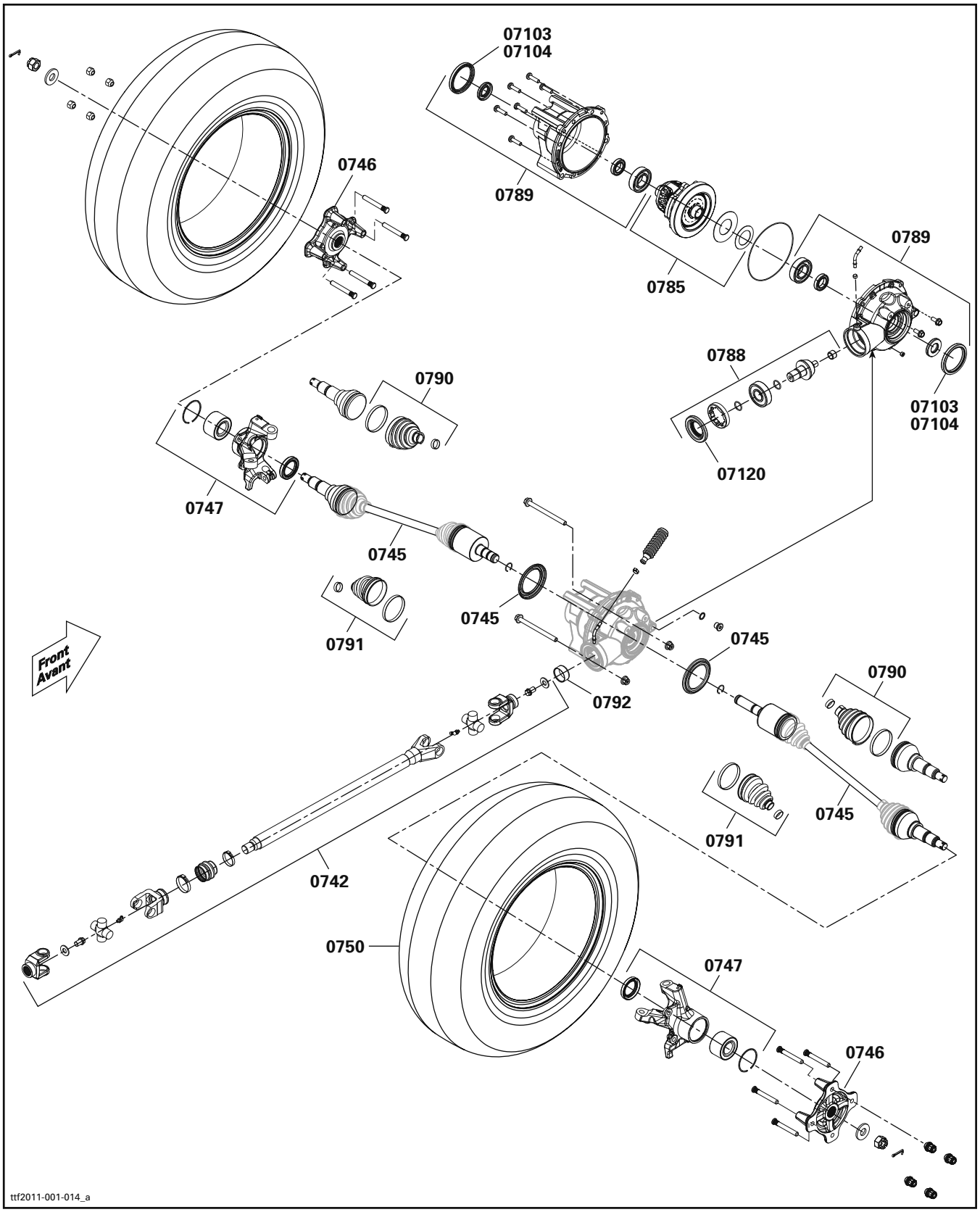

LTD

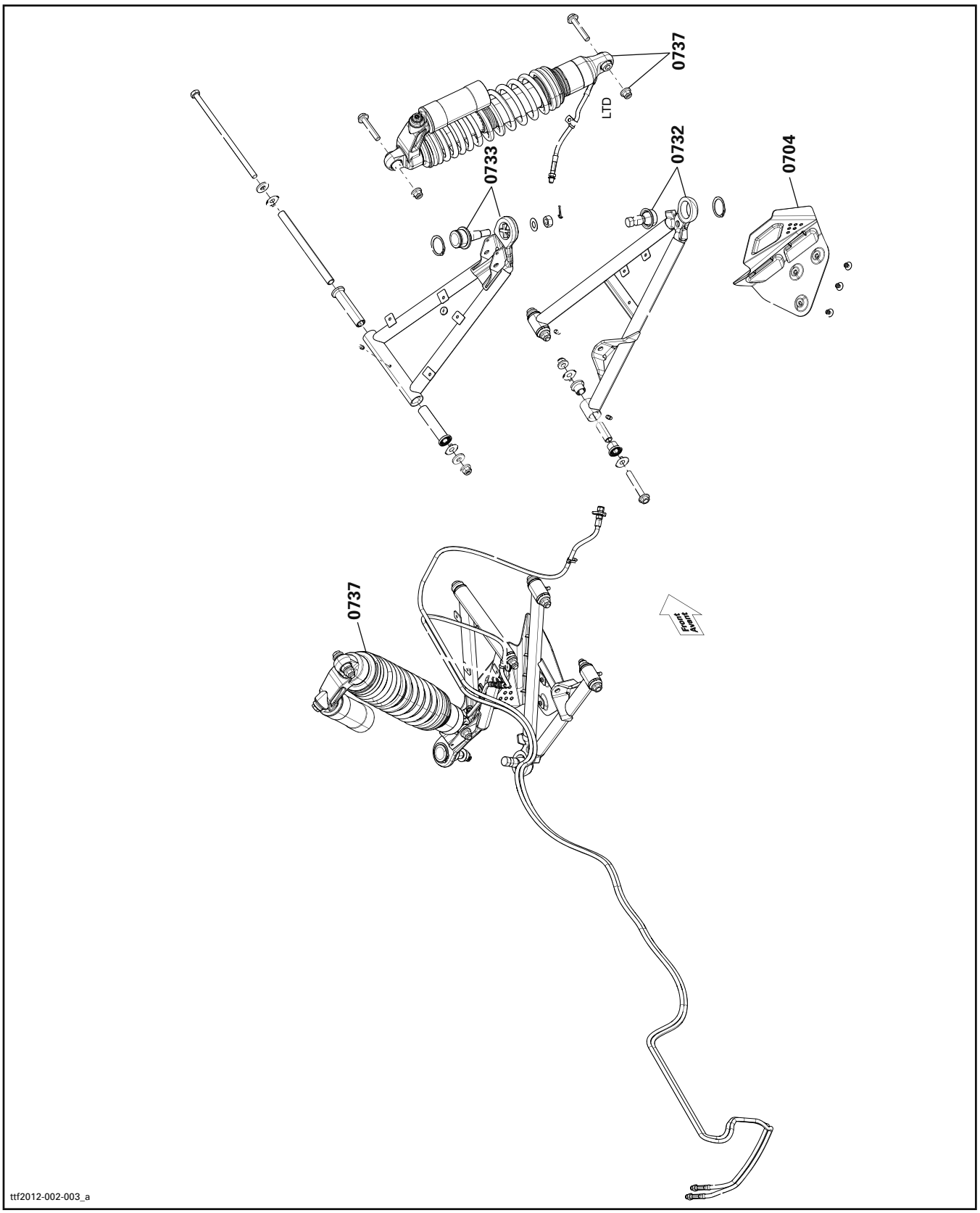

REAR DRIVE SYSTEM AND SUSPENSION
SYSTÈME D'ENTRAÎNEMENT ARRIÈRE ET SUSPENSION

SYSTEM SYSTÈME	CODE	DESCRIPTION	COMMANDER 800	COMMANDER 1000	COMMANDER LTD 1000
			1	2	3
08	**00**	**NO LABOR INVOLVED AUCUNE MAIN D'OEUVRE**	**0**	**0**	**0**
08	05	REAR WHEEL HUB (RH) MOYEU DE ROUE ARRIÈRE (DROIT)	0.3	0.3	0.3
08	07	REAR DIFFERENTIAL (ASS'Y) DIFFÉRENTIEL ARRIÈRE (COMPLET)	1.6	1.6	1.6
08	21	COMPRESSOR COMPRESSEUR			0.8
09	24	PNEUMATIC HOSE BOYAU PNEUMATIQUE			0.5
08	26	REAR PROPELLER SHAFT (ASS'Y) ARBRE DE PROPULSION ARRIÈRE (COMPLET)	1.8	1.8	1.8
08	62	SWING ARM BRAS OSCILLANT	1.2	1.2	1.2
08	101	LH PROTECTOR PROTECTEUR GAUCHE	0.3	0.3	0.3
08	102	RH PROTECTOR PROTECTEUR DROIT	0.3	0.3	0.3
08	109	REAR WHEEL HUB (LH) MOYEU DE ROUE ARRIÈRE (GAUCHE)	0.3	0.3	0.3
08	111	REAR SHOCK (RH OR LH) AMORTISSEUR ARRIÈRE (DROIT OU GAUCHE)	0.3	0.3	0.3
08	114	REAR RIM AND/OR TIRE JANTE ARRIÈRE ET/OU PNEU	0.4	0.4	0.4
08	120	CV JOINT (RH OR LH) JOINT HOMOCINÉTIQUE (DROIT OU GAUCHE)	0.7	0.7	0.7
08	121	STABILIZER BAR BARRE STABILISATRICE	0.4	0.4	0.4
08	122	RING GEAR AND/OR SHIM COURONNE DE LANCEMENT ET/OU CALE	2.8	2.8	2.8
08	123	RING GEAR DRIVE GEAR AND/OR BEARING AND/OR SHIM PIGNON DE COMMANDE DE LA COURONNE ET/OU ROULEMENT À BILLE ET/OU CALE	2.8	2.8	2.8
08	124	COVER AND/OR PINION COVER AND/OR SEAL AND/OR BEARING COUVERCLE ET/OU COUVERCLE DE PIGNON ET/OU JOINT D'ÉTANCHÉITÉ ET/OU ROULEMENT À BILLE	2.9	2.9	2.9
08	125	BOOT WHEEL KIT AND/OR CV JOINT (RH OR LH) ENSEMBLE DE SOUFFLET DE ROUE ET/OU JOINT CV (DROIT OU GAUCHE)	0.8	0.8	0.8
08	126	BOOT DIFFERENTIAL KIT AND/OR PLUNGING JOINT (RH OR LH) ENSEMBLE DE SOUFFLET DE DIFFÉRENTIEL ET/OU JOINT PLONGENT (DROIT OU GAUCHE)	0.8	0.8	0.8
08	127	RADIAL BALL BEARINGS ROULEMENTS À BILLE RADIALES	0.9	0.9	0.9
08	134	DIFFERENTIAL SEAL (1) JOINT D'ÉTANCHÉITÉ DU DIFFÉRENTIEL (1)	0.8	0.8	0.8

SYSTEM SYSTÈME	CODE	DESCRIPTION	COMMANDER 800	COMMANDER 1000	COMMANDER LTD 1000
			1	2	3
08	135	DIFFERENTIAL SEALS (2) JOINTS D'ÉTANCHÉITÉ DU DIFFÉRENTIEL (2)	1.4	1.4	1.4
08	137	PRESSURE COLLECTOR (ASS'Y) COLLECTEUR DE PRESSION (COMPLET)			0.7
08	140	AUXILIARY FITTING AND SUPPORT RACCORD AUXILIAIRE ET SUPPORT			0.6
08	146	PIVOTS BUSHINGS, SEALS AND BEARINGS DOUILLES DE PIVOTS, JOINTS D'ÉTANCHÉITÉ ET ROULEMENTS À BILLE	0.9	0.9	0.9
08	148	DIFFERENTIAL OIL SEAL ANNEAU D'ÉTANCHÉITÉ DU DIFFÉRENTIEL	2.5	2.5	2.5
08	150	UPPER SUPPORT SUPPORT SUPÉRIEUR			0.6
08	151	LOWER SUPPORT SUPPORT INFÉRIEUR			0.6
08	152	TANK AND/OR STRAPS RÉSERVOIR ET/OU SANGLES			0.5
08	158	HOSE (DIFFERENTIAL VENT) BOYAU (VENTILATION DU DIFFÉRENTIEL)	0.3	0.3	0.3

REAR DRIVE SYSTEM AND SUSPENSION
SYSTÈME D'ENTRAÎNEMENT ARRIÈRE ET SUSPENSION

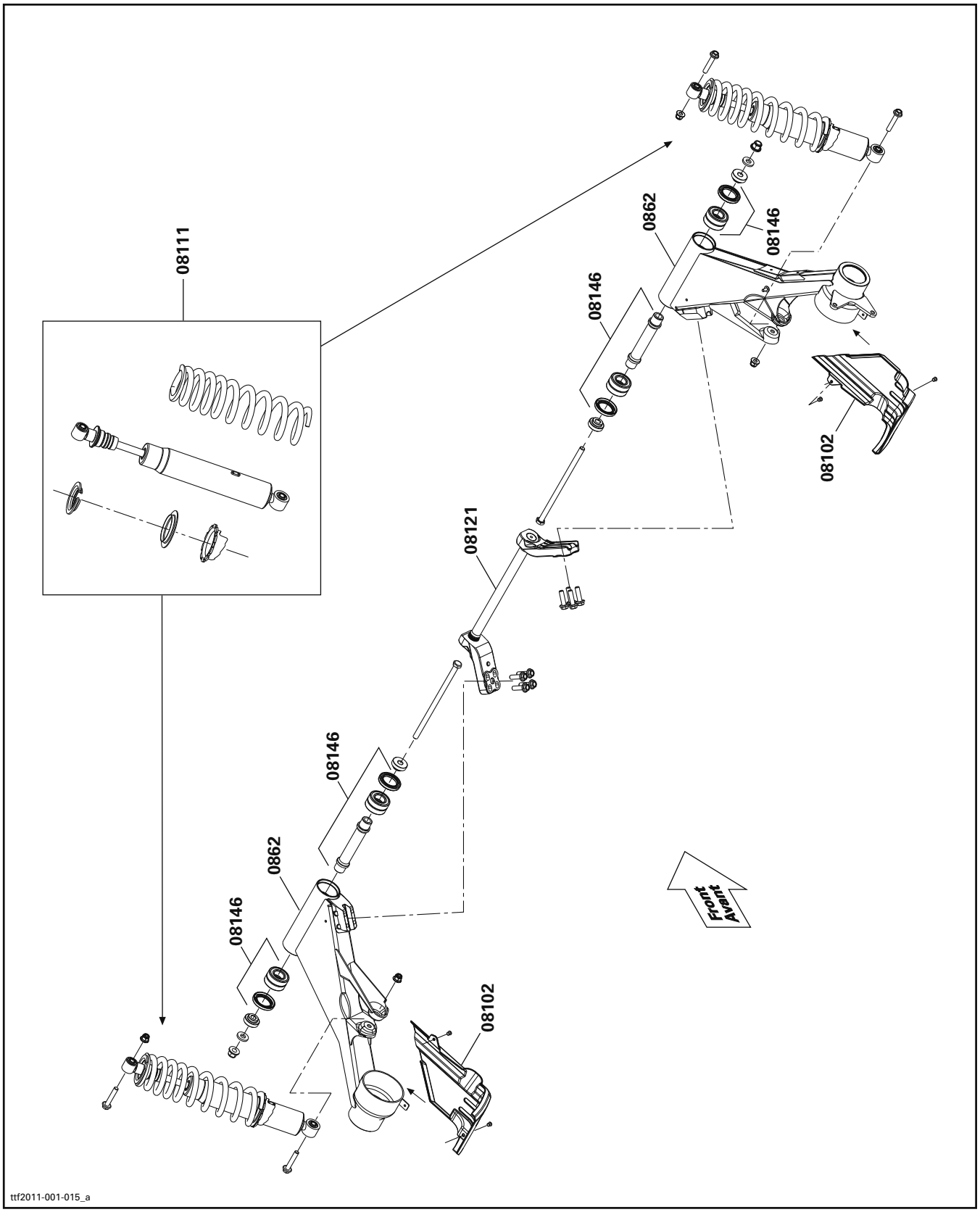

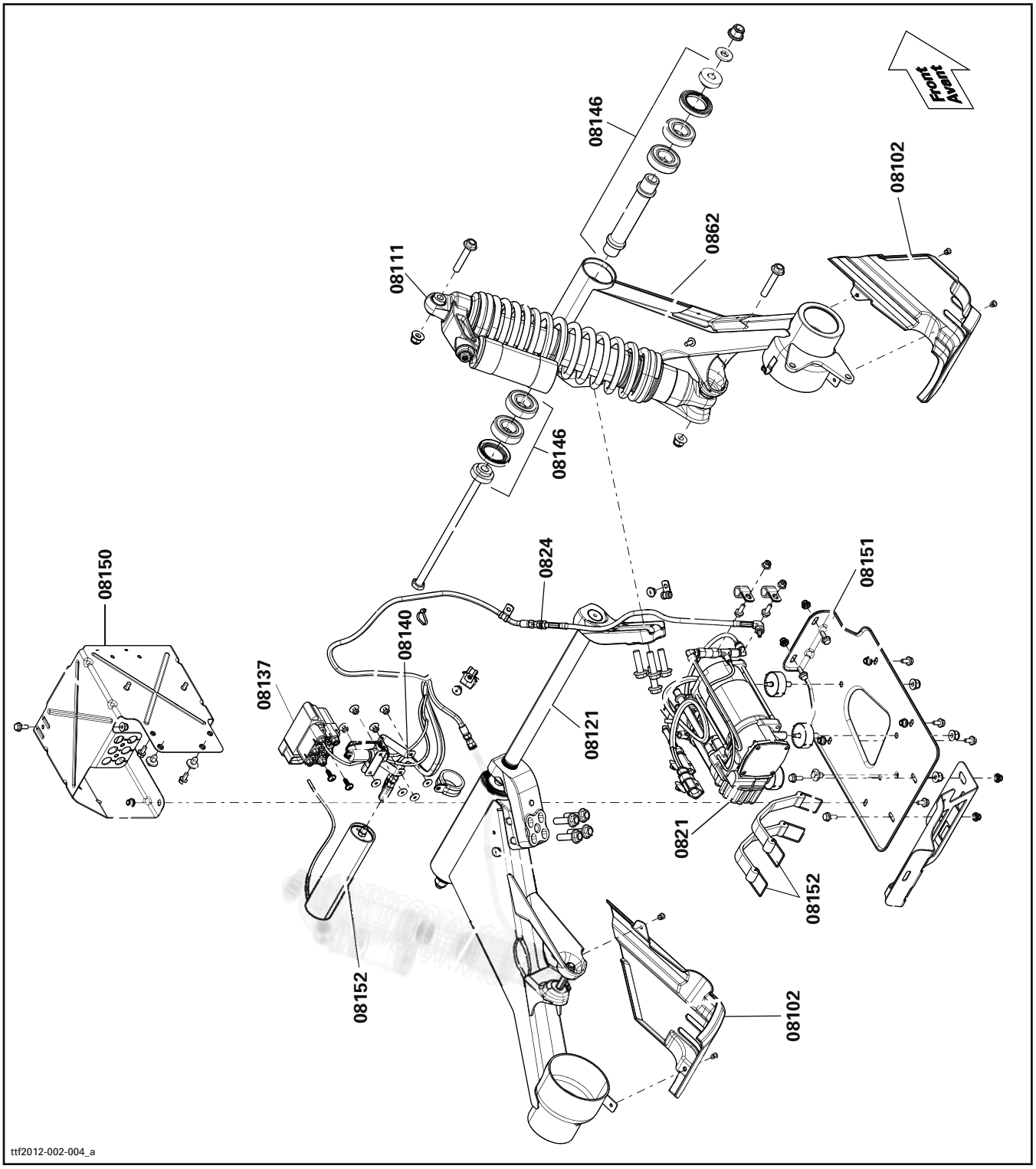
Front
Avant
08146
08102
0862
08111
08146
08150
0824
08151
08140
08137
08121
0821
08152
08152
08102
ttf2012-002-004_a

REAR DRIVE SYSTEM AND SUSPENSION
SYSTÈME D'ENTRAÎNEMENT ARRIÈRE ET SUSPENSION

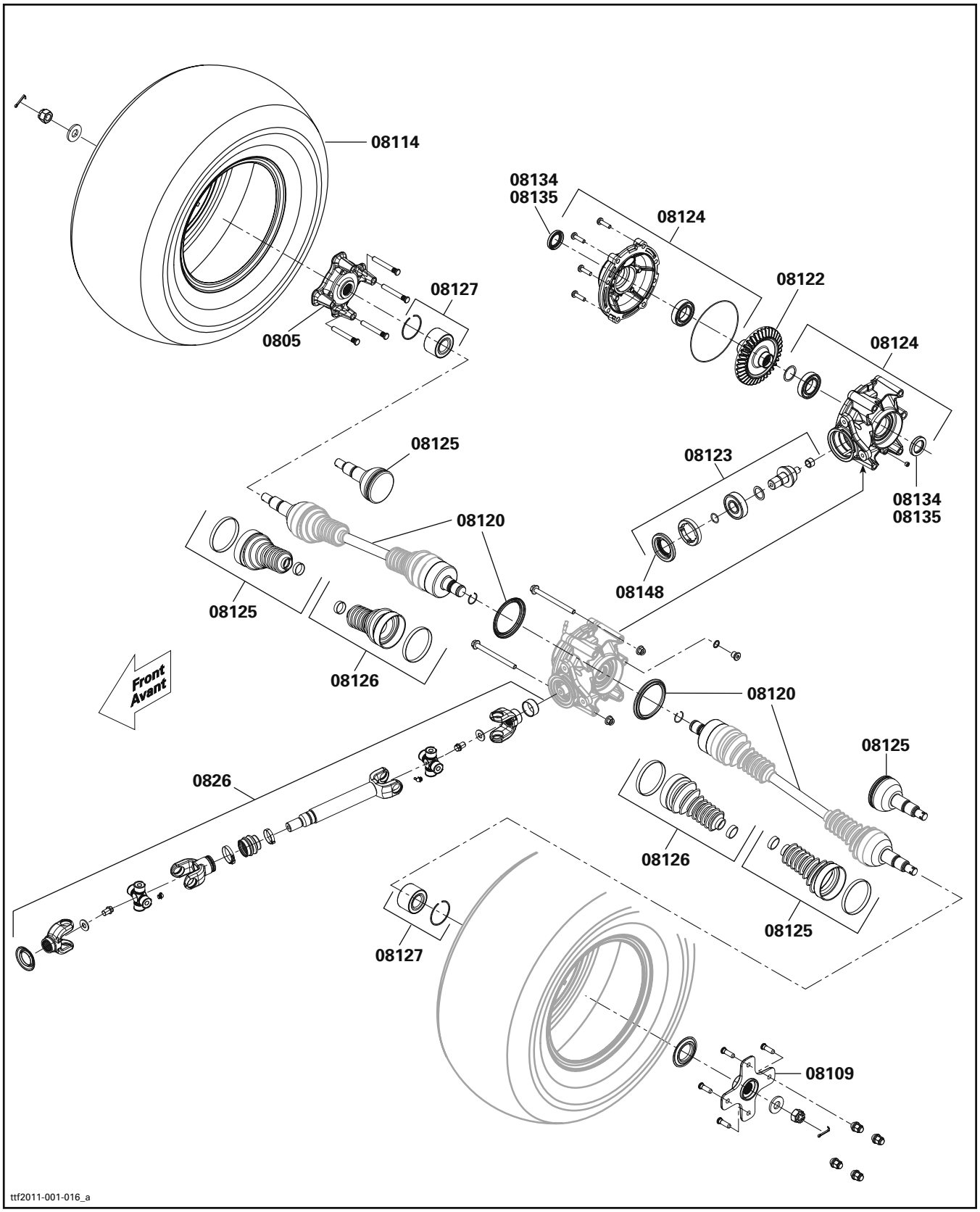

SYSTEM SYSTÈME	CODE	DESCRIPTION	COMMANDER 800	COMMANDER 1000	COMMANDER LTD 1000
			1	2	3
09	**00**	**NO LABOR INVOLVED AUCUNE MAIN D'OEUVRE IMPLIQUÉE**	**0**	**0**	**0**
09	01	HOOD CAPOT	3.0	3.0	3.0
09	09	WINDSHIELD PARE-BRISE			0.3
09	25	LATCH BASE AND/OR LEVER AND/OR SPRING BASE DE LOQUET ET/OU LEVIER ET/OU RESSORT	0.3	0.3	0.3
09	26	FRONT BUMPER PARE-CHOCS AVANT	0.6	0.6	0.6
09	27	WINCH LATCH ATTACHE DE TREUIL	0.3	0.3	0.3
09	28	FRONT FASCIA FASCIA AVANT	0.5	0.5	0.5
09	35	HITCH SUPPORT SUPPORT D'ATTELAGE	0.4	0.4	0.4
09	39	FRONT OR REAR MUDGUARD KIT (RH OR LH) ENSEMBLE DE GARDE-BOUE AVANT OU ARRIÈRE (DROIT OU GAUCHE)	0.7	0.7	0.7
09	57	FRONT FENDER AND/OR SUPPORT (RH OR LH) AILE AVANT ET/OU SUPPORT (DROIT OU GAUCHE)	1.5	1.5	1.5
09	71	FUEL TANK COVER COUVRE RÉSERVOIR D'ESSENCE	0.5	0.5	0.5
09	80	FRONT GRILLS GRILLES AVANT	0.3	0.3	0.3
09	81	SIDE GRILL (RIGHT AND/OR LEFT) GRILLE LATÉRALE (DROITE ET/OU GAUCHE)	0.3	0.3	0.3
09	82	CABLE RETAINER CÂBLE DE RETENUE	0.3	0.3	0.3
09	93	PROTECTION PLATE PLAQUE DE PROTECTION	0.4	0.4	0.4
09	95	EACH DECAL (1) CHAQUE AUTOCOLLANT (1)	0.3	0.3	0.3
09	97	SHOCK GAZ (REAR CARGO BOX) AMORTISSEUR (BOÎTE DE RANGEMENT)	0.3	0.3	0.3
09	102	PIVOT SUPPORT SUPPORT DE PIVOT	0.3	0.3	0.3
09	107	WINDSCREEN LATCH LOQUET DU PARE-BRISE			0.3
09	110	SEAT AND/OR BACKREST (DRIVER OR CO-PILOT) SIÈGE ET/OU DOSSIER (CONDUCTEUR OU COPILOTE)	0.3	0.3	0.3
09	111	SEAT BASE ASS'Y (DRIVER OR CO-PILOT) BASE DE SIÈGE COMPLET (CONDUCTEUR OU COPILOTE)	0.3	0.3	0.3

SYSTEM SYSTÈME	CODE	DESCRIPTION	COMMANDER 800	COMMANDER 1000	COMMANDER LTD 1000
			1	2	3
09	120	FRONT LIGHT FASCIA FASCIA DE LUMIÈRE AVANT	0.4	0.4	0.4
09	134	CARGO BOX LEVER AND/OR RINGS AND/OR CLAMP LEVIER BENNE ET/OU BAGUES ET/OU BRIDE	0.6	0.6	0.6
09	157	UPPER CONSOLE CONSOLE SUPÉRIEURE	0.5	0.5	0.5
09	162	FRONT BUMPER (XT) PARE-CHOC AVANT (XT)	0.3	0.3	0.3
09	168	FRONT GRILL GRILLE FRONTALE	0.3	0.3	0.3
09	219	DOOR LATCH LOQUET DE PORTE	0.3	0.3	0.3
09	226	LOWER CONSOLE CONSOLE INFÉRIEURE	0.4	0.4	0.4
09	227	SERVICE COVER COUVERCLE DE SERVICE	0.3	0.3	0.3
09	231	REAR PANEL (LEFT OR RIGHT) PANNEAU ARRIÈRE (GAUCHE OU DROIT)	0.9	0.9	0.9
09	239	MIDDLE SIDE PANEL (LEFT OR RIGHT) PANNEAU LATÉRAL CENTRAL (GAUCHE OU DROIT)	0.6	0.6	0.6
09	282	LATCH AND/OR BASE (RIGHT OR LEFT) LOQUET ET/OU BASE (DROIT OU GAUCHE)	0.3	0.3	0.3
09	284	BOX DOOR PORTE DE COFFRE	0.3	0.3	0.3
09	289	GLOVES BOX BOÎTE À GANTS	0.3	0.3	0.3
09	290	DASHBOARD TABLEAU DE BORD	0.4	0.4	0.4
09	294	SIDE STORAGE COMPARTMENT (RIGHT OR LEFT) COMPARTIMENT DE RANGEMENT LATÉRAL (DROIT OU GAUCHE)	0.5	0.5	0.5
09	304	REAR SUPPORT SUPPORT ARRIÈRE	0.8	0.8	0.8
09	306	REAR SIDE PANEL (RIGHT OR LEFT) PANNEAU LATÉRAL ARRIÈRE (DROIT OU GAUCHE)	0.3	0.3	0.3
09	308	BOTTOM FRONT SIDE PANEL (RH OR LH) PANNEAU LATÉRAL AVANT BAS (DROIT OU GAUCHE)	0.6	0.6	0.6
09	334	UPPER FASCIA FASCIA SUPÉRIEUR	0.3	0.3	0.3
09	335	FLASHER COVER (RIGHT OR LEFT) COUVRE CLIGNOTANT (DROIT OU GAUCHE)	0.3	0.3	0.3
09	336	CENTRAL SKID PLATE PLAQUE DE PROTECTION CENTRALE	0.3	0.3	0.3

SYSTEM SYSTÈME	CODE	DESCRIPTION	COMMANDER 800	COMMANDER 1000	COMMANDER LTD 1000
			1	2	3
09	337	REAR SKID PLATE PLAQUE DE PROTECTION ARRIÈRE	0.3	0.3	0.3
09	338	AIR INLET COVER COUVERCLE D'ADMISSION D'AIR	0.3	0.3	0.3
09	339	FLOOR PANEL (LEFT) PANNEAU DE PLANCHER (GAUCHE)	3.0	3.0	3.0
09	340	FLOOR PANEL (RIGHT) PANNEAU DE PLANCHER (DROIT)	2.1	2.1	2.1
09	341	FRONT BULKHEAD (LEFT) CLOISON AVANT (GAUCHE)	2.6	2.6	2.6
09	342	FRONT BULKHEAD (RIGHT) CLOISON AVANT (DROITE)	2.0	2.0	2.0
09	343	REAR BULKHEAD (LEFT) CLOISON ARRIÈRE (GAUCHE)	1.3	1.3	1.3
09	344	REAR BULKHEAD (RIGHT) CLOISON ARRIÈRE (DROITE)	1.3	1.3	1.3
09	345	LATERAL CONSOLE PANEL (LEFT) PANNEAU LATÉRAL DE CONSOLE (GAUCHE)	0.3	0.3	0.3
09	346	LATERAL CONSOLE PANEL (RIGHT) PANNEAU LATÉRAL DE CONSOLE (DROIT)	0.3	0.3	0.3
09	347	FIXE CONSOLE PANEL (LEFT) PANNEAU FIXE DE CONSOLE (GAUCHE)	0.8	0.8	0.8
09	348	FIXE CONSOLE PANEL (RIGHT) PANNEAU FIXE DE CONSOLE (DROIT)	0.8	0.8	0.8
09	349	LEVER INDICATOR INDICATEUR DE VITESSE	0.5	0.5	0.5
09	350	CARGO BOX (LEFT AND RIGHT) BENNE (GAUCHE ET DROITE)	4.6	4.6	4.6
09	351	CARGO BOX (LEFT) BENNE (GAUCHE)	3.7	3.7	3.7
09	352	CARGO BOX (RIGHT) BENNE (DROITE)	3.7	3.7	3.7
09	353	REMOVABLE FLOOR PLATEAU AMOVIBLE	0.3	0.3	0.3
09	354	FRONT REINFORCEMENT RENFORT AVANT	0.3	0.3	0.3
09	355	TAILLIGHT TRIM (LEFT OR RIGHT) ENJOLIVEUR DE FEU ARRIÈRE (GAUCHE OU DROIT)	0.3	0.3	0.3
09	356	CARGO BOX RAIL AND/OR COVER RAIL DE BENNE ET/OU COUVERCLE	0.3	0.3	0.3
09	357	CARGO BOX RETAINER AND/OR SPRING (LEFT OR RIGHT) ANCRAGE DE BENNE ET/OU RESSORT (GAUCHE OU DROIT)	0.5	0.5	0.5

SYSTEM SYSTÈME	CODE	DESCRIPTION	COMMANDER 800	COMMANDER 1000	COMMANDER LTD 1000
			1	2	3
09	358	CARGO BOX FRAME CHÂSSIS DE LA BENNE	1.6	1.6	1.6
09	359	CARGO BOX PIVOTS (ALL PARTS) PIVOTS DE LA BENNE (TOUTES LES PIÈCES)	0.7	0.7	0.7
09	360	UPPER TAIL GATE PANEL PANNEAU DU HAYON SUPÉRIEUR	0.3	0.3	0.3
09	361	LOWER TAIL GATE PANEL PANNEAU DU HAYON INFÉRIEUR	0.3	0.3	0.3
09	362	UPPER TAIL GATE HAYON SUPÉRIEUR	0.4	0.4	0.4
09	363	LOWER TAIL GATE HAYON INFÉRIEUR	0.6	0.6	0.6
09	364	HEAD REST APPUI-TÊTE	0.3	0.3	0.3
09	365	SAFETY BELT CEINTURE DE SÉCURITÉ	0.3	0.3	0.3
09	366	BUCKLE BELT VERROU CEINTURE	0.3	0.3	0.3
09	367	LOCK VERROU	0.3	0.3	0.3
09	368	HANDHOLD (LEFT) POIGNÉE DE MAINTIEN (GAUCHE)	0.3	0.3	0.3
09	371	ROCK SLIDER (LEFT OR RIGHT) GLISSIÈRE DE PROTECTION (GAUCHE OU DROITE)		0.5	0.5
09	372	SHOULDER GUARD (LEFT AND/OR RIGHT) PROTECTEUR D'ÉPAULE (GAUCHE ET/OU DROIT)	0.3	0.3	0.3
09	373	HANDHOLD (FRONT) POIGNÉE DE MAINTIEN (AVANT)	0.3	0.3	0.3
09	374	LATERAL NET (LEFT OR RIGHT) FILET LATÉRAL (GAUCHE OU DROIT)	0.5	0.5	0.5
09	375	HANDHOLD BAR (LEFT) BARRE DE POIGNÉE DE MAINTIEN (GAUCHE)	0.4	0.4	0.4
09	385	CAGE KIT ENSEMBLE DE CAGE	1.4	1.4	1.4
09	386	ROOF VISOR TOIT VISIÈRE			0.5
09	387	MIDDLE ROOF TOIT CENTRAL			0.3
09	388	REAR NET FILET ARRIÈRE			0.3

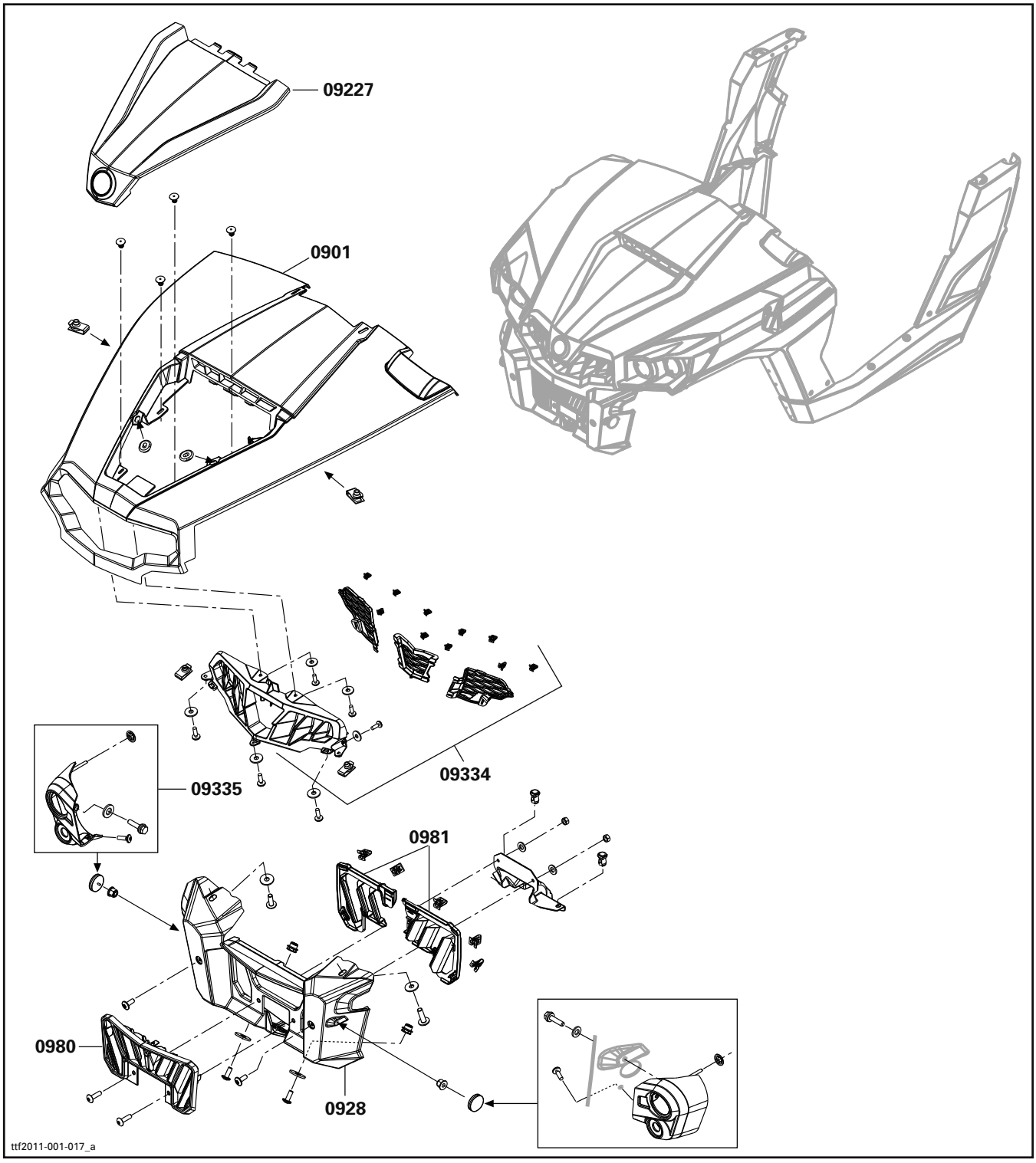
09227
0901
09335
09334
0981
0980
0928
ttf2011-001-017_a

BODY AND ACCESSORIES
CARROSSERIE ET ACCESSOIRES

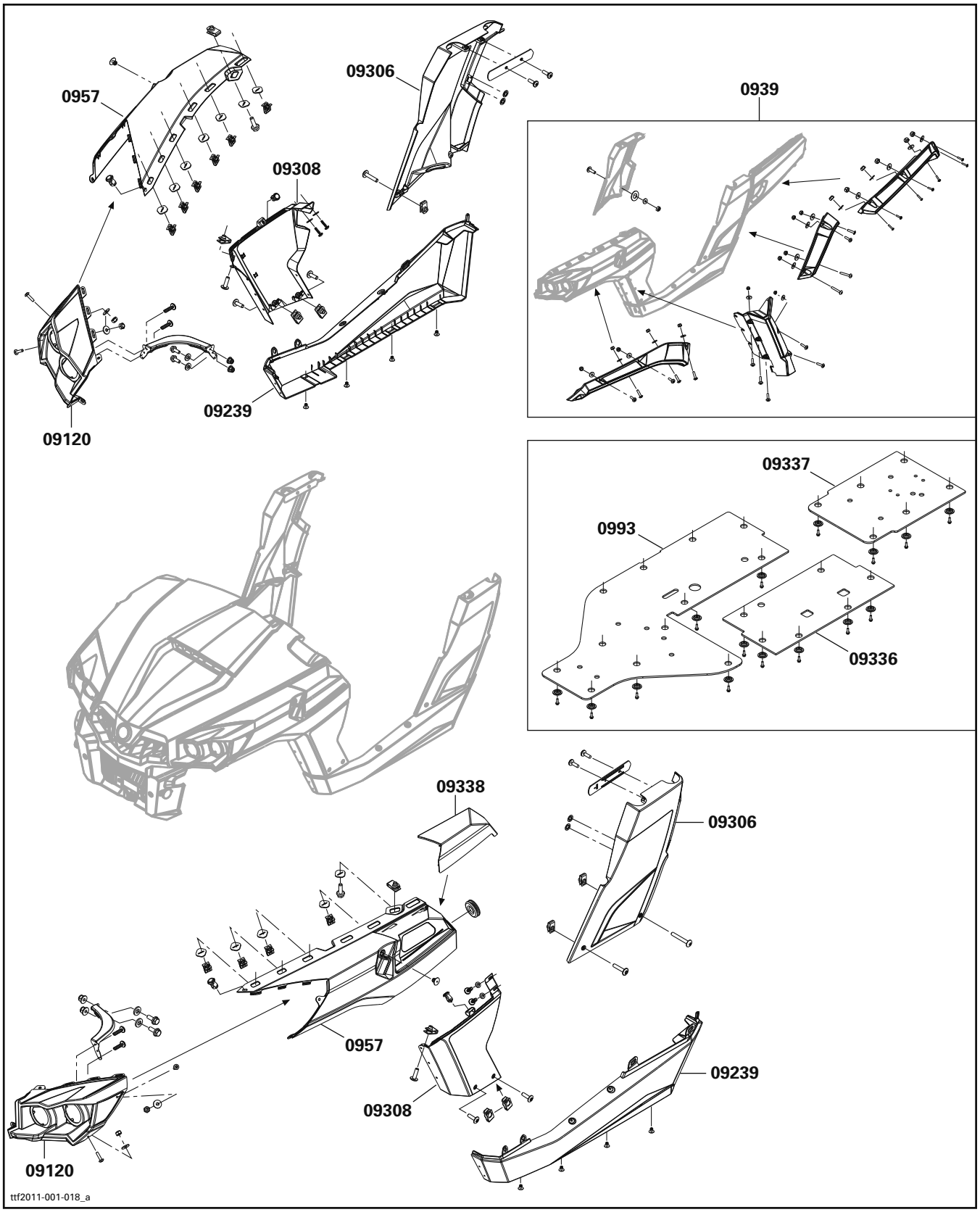

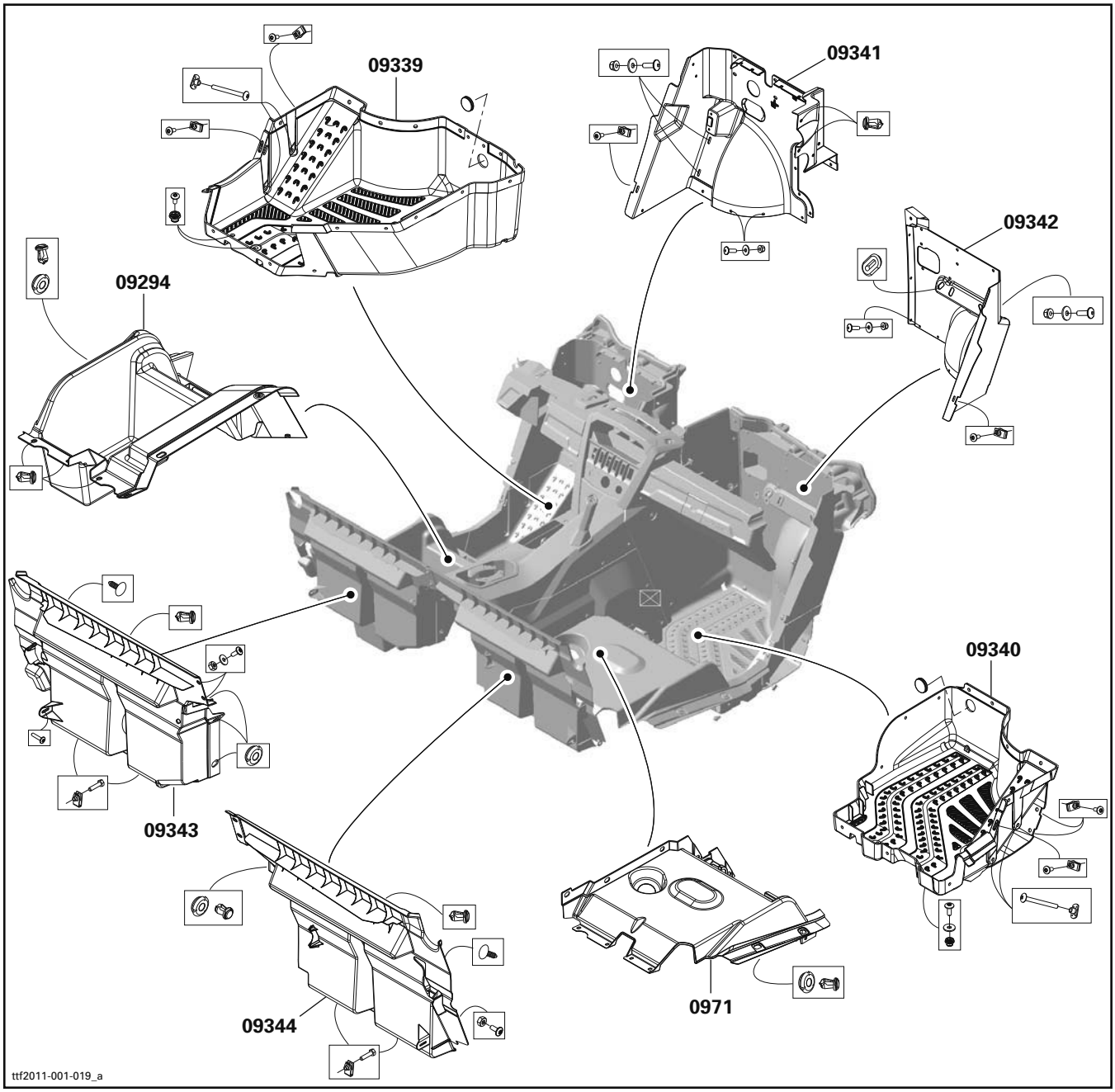
09339
09341
09342
09294
09340
09343
09344
0971
ttf2011-001-019_a

BODY AND ACCESSORIES
CARROSSERIE ET ACCESSOIRES

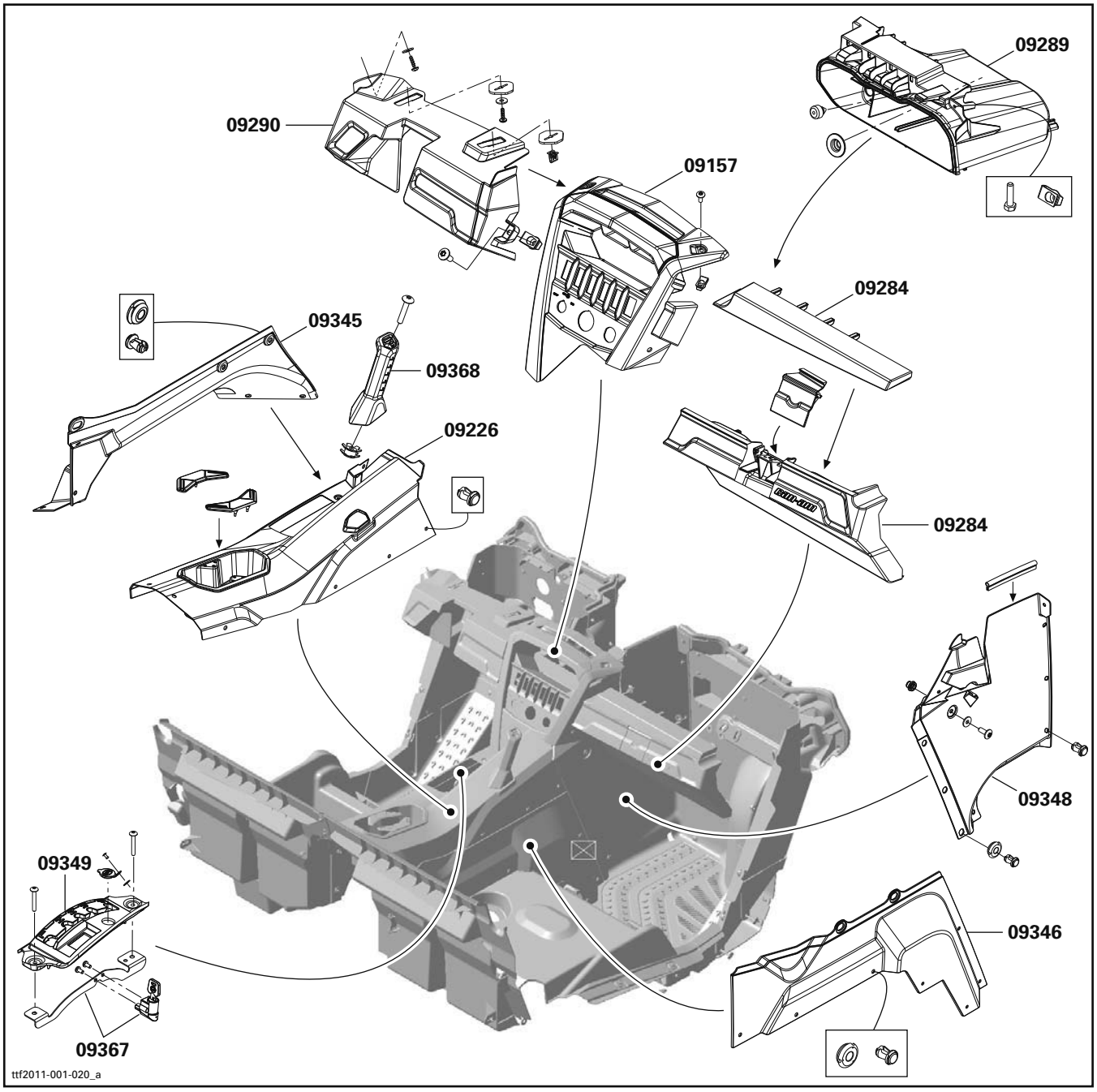

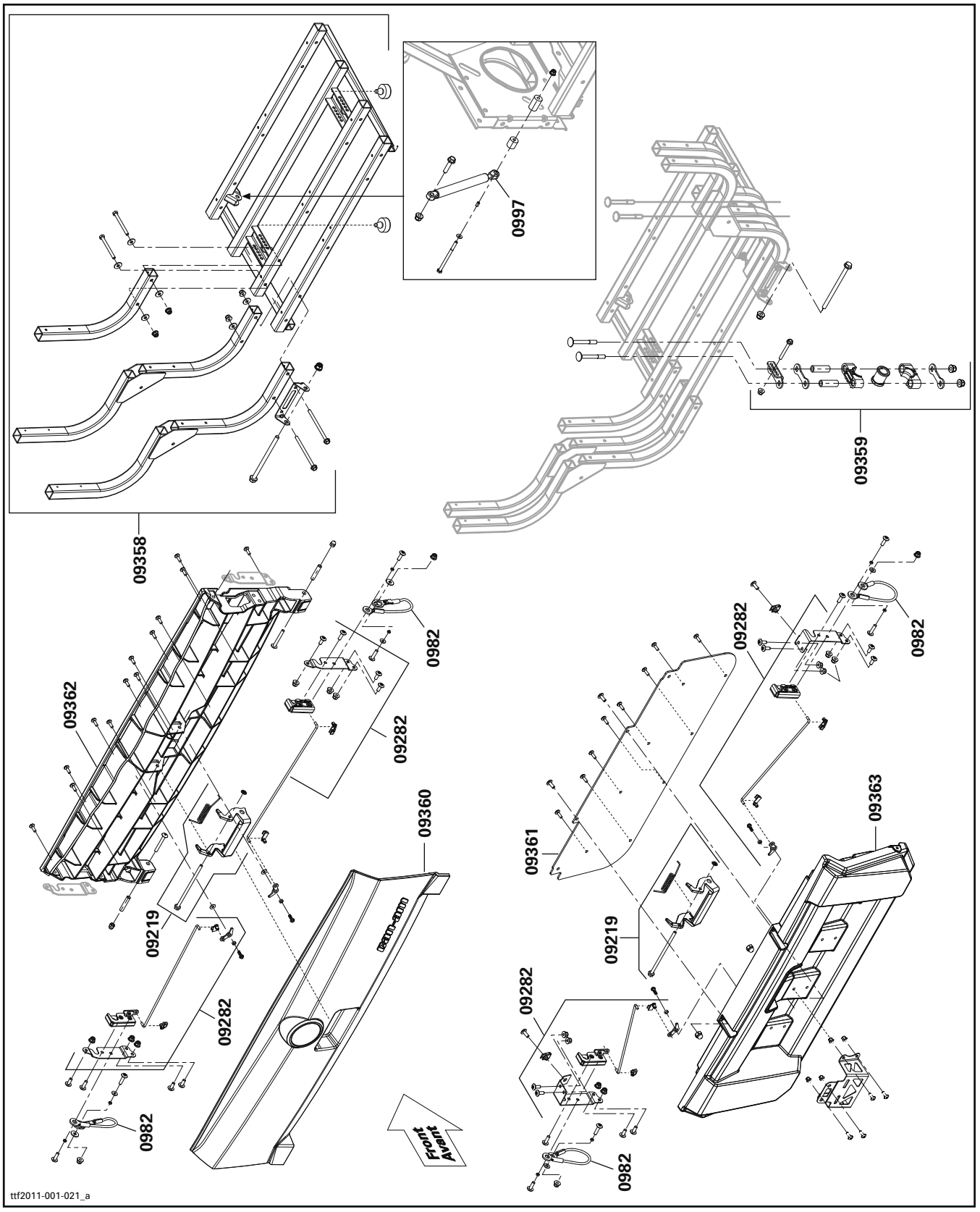
0997
09359
09358
0982
09362
09282
09360
09219
09282
0982
09282
0982
09363
09361
09219
09282
0982
Front
Avant
ttf2011-001-021_a

BODY AND ACCESSORIES
CARROSSERIE ET ACCESSOIRES

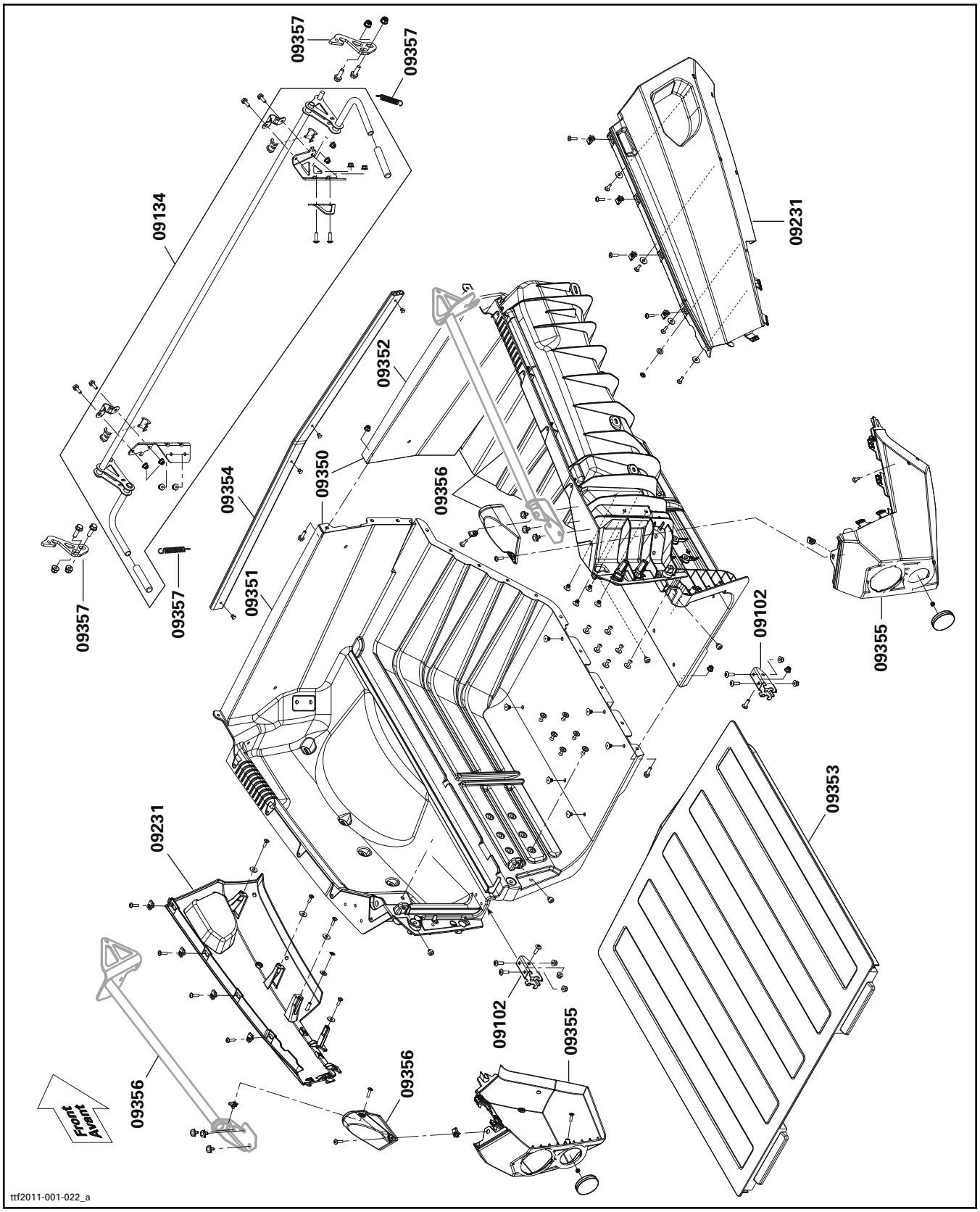

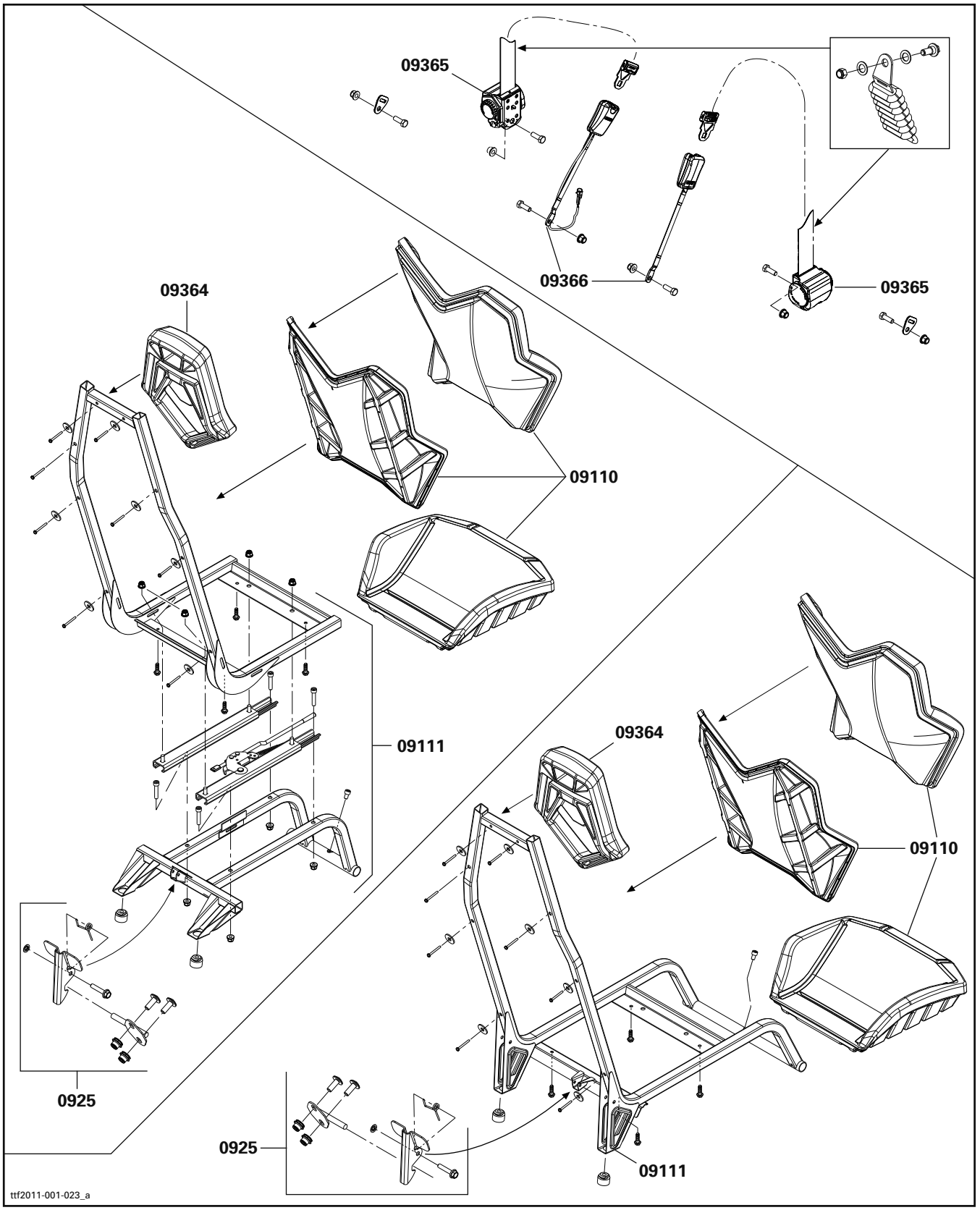
09365
09366
09365
09364
09110
09111
0925
09364
09110
0925
09111
ttf2011-001-023_a

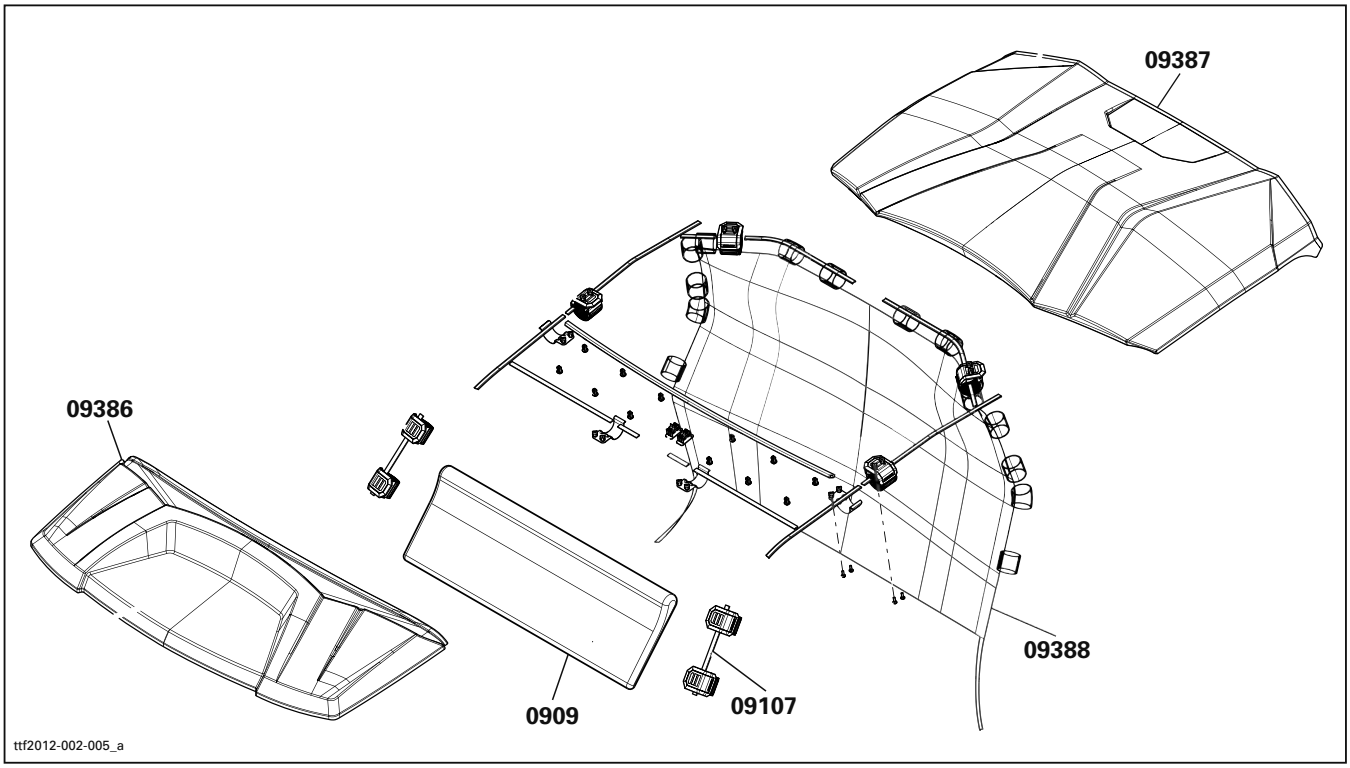
09387
09386
09388
0909
09107
ttf2012-002-005_a

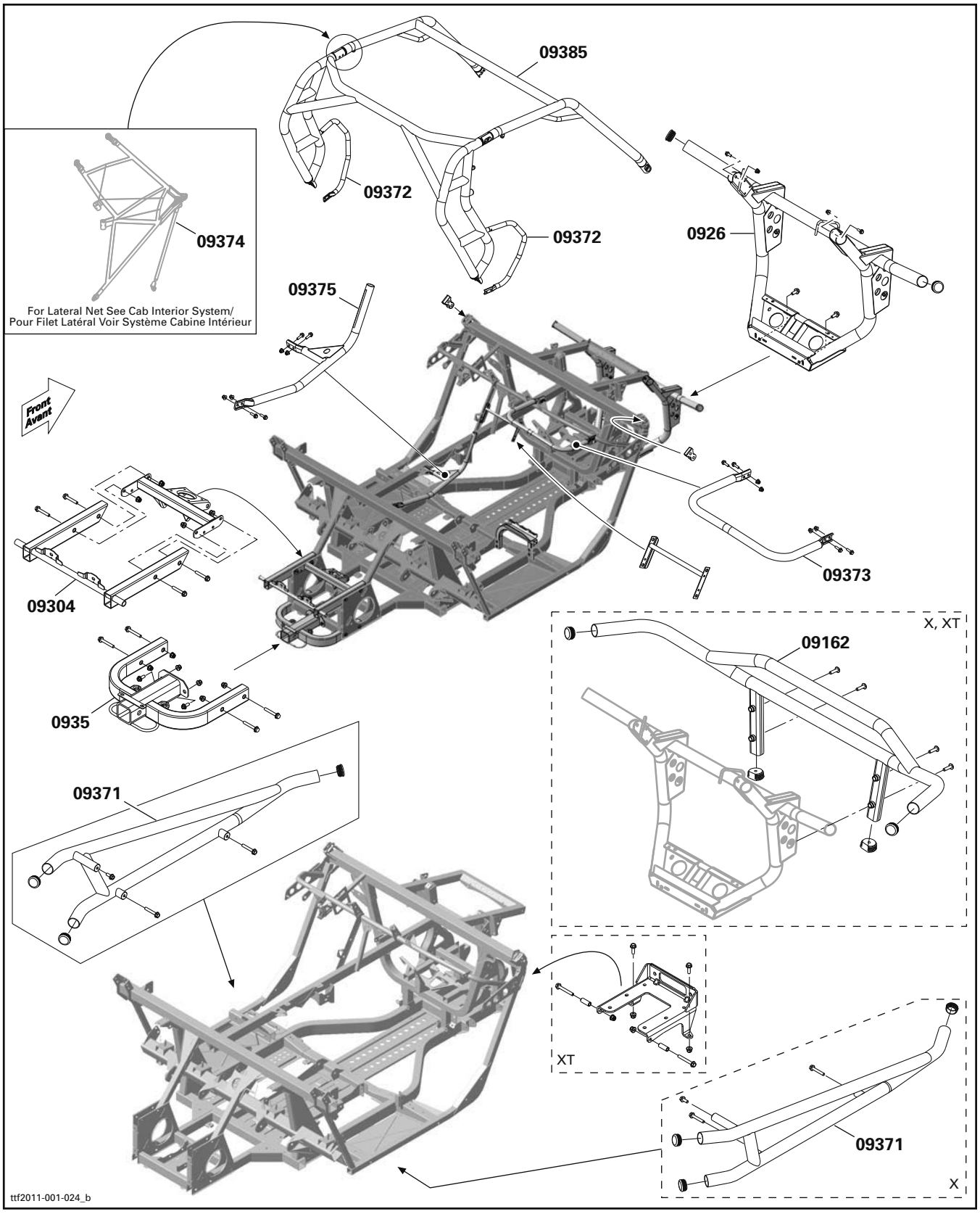
09385
09372
09372
09374
For Lateral Net See Cab Interior System/
Pour Filet Latéral Voir Système Cabine Intérieur
0926
09375
Front
Avant
09373
09304
0935
X, XT
09162
09371
XT
09371
X
ttf2011-001-024_b

SYSTEM SYSTÈME	CODE	DESCRIPTION	COMMANDER 800	COMMANDER 1000	COMMANDER LTD 1000
			1	2	3
10	**00**	**NO LABOR INVOLVED AUCUNE MAIN-D'OEUVRE**	**0**	**0**	**0**
10	01	IGNITION SWITCH INTERRUPTEUR D'ALLUMAGE	0.3	0.3	0.3
10	04	HEADLIGHT SWITCH INTERRUPTEUR DE PHARE	0.3	0.3	0.3
10	09	HEADLAMP AND/OR HEADLAMP SUPPORT (ASS'Y) (RH OR LH) PHARE AVANT ET/OU SUPPORT (COMPLET) (DROIT OU GAUCHE)	0.5	0.5	0.5
10	10	VOLTAGE REGULATOR RÉGULATEUR DE TENSION	0.3	0.3	0.3
10	13	BATTERY BATTERIE	0.3	0.3	0.3
10	14	FUSE BOX BOÎTE-FUSIBLE	0.4	0.4	0.4
10	29	TAIL LAMP HOUSING (ASS'Y) BOÎTIER DE FEU ARRIÈRE (COMPLET)	0.3	0.3	0.3
10	31	DC OUTLET PLUG PRISE D'ACCESSOIRE DC	0.3	0.3	0.3
10	34	ELECTRONIC MODULE MODULE ÉLECTRONIQUE	0.3	0.3	0.3
10	41	ENGINE HARNESS CÂBLAGE MOTEUR	1.6	1.6	1.6
10	45	WINCH (ASS'Y) (XT) TREUIL (COMPLET) (XT)	0.6	0.6	0.6
10	46	WINCH SOLENOID (XT) SOLÉNOÏDE DE TREUIL (XT)	0.5	0.5	0.5
10	47	WINCH SWITCH (XT) INTERRUPTEUR DE TREUIL (XT)	0.3	0.3	0.3
10	49	MULTIFUNCTION GAUGE CADRAN MULTIFONCTION	0.3	0.3	0.3
10	51	MAIN WIRE HARNESS CÂBLAGE PRINCIPAL	3.0	3.0	3.0
10	52	STARTING RELAY RELAIS DE DÉMARRAGE	0.4	0.4	0.4
10	61	FRONT FLASHERS 1 OR 2 (**CE** ONLY) CLIGNOTANTS AVANT 1 OU 2 (**CE** SEULEMENT)	0.3	0.3	0.3
10	62	REAR FLASHERS 1 OR 2 (**CE** ONLY) CLIGNOTANTS ARRIÈRE 1 OU 2 (**CE** SEULEMENT)	0.3	0.3	0.3
10	63	HAZARD WARNING BUTTON (**CE** ONLY) COMMUTATEUR D'URGENCE (**CE** SEULEMENT)	0.3	0.3	0.3
10	64	DIRECTION INDICATOR SWITCH (**CE** ONLY) INTERRUPTEUR CLIGNOTANTS (**CE** SEULEMENT)	0.3	0.3	0.3

SYSTEM SYSTÈME	CODE	DESCRIPTION	COMMANDER 800	COMMANDER 1000	COMMANDER LTD 1000
			1	2	3
10	65	12 VOLT RELAY (CE ONLY) RELAIS 12 VOLT (CE SEULEMENT)	0.3	0.3	0.3
10	66	HORN AVERTISSEUR	0.3	0.3	0.3
10	67	RELAY RELAIS	0.3	0.3	0.3
10	68	ANY BULBS TOUTES LES AMPOULES	0.4	0.4	0.4
10	71	LICENSE LIGHT (ASS'Y) LUMIÈRE D'IMMATRICULATION (COMPLET)	0.3	0.3	0.3
10	75	REAR HARNESS CÂBAGLE ARRIÈRE			1.0
10	76	FRONT HARNESS CÂBLAGE AVANT			1.2
10	83	SWITCH INTERRUPTEUR			0.3
10	93	ANTENNA ANTENNE			0.4
10	96	RADIO CONTROL SWITCH INTERRUPTEUR DE COMMANDE RADIO			0.4
10	97	RADIO MODULE MODULE RADIO			0.4
10	98	REAR SPEAKER HAUT-PARLEUR ARRIÈRE			0.3
10	104	FRONT SPEAKER HAUT-PARLEUR AVANT			0.3
10	111	START BUTTON BOUTON DE DÉMARRAGE	0.3	0.3	0.3
10	112	OVERRIDE SWITCH INTERRUPTEUR DE NEUTRALISATION	0.3	0.3	0.3
10	113	REMOTE CONTROL COMMANDE À DISTANCE	0.3	0.3	0.3
10	114	WINCH CONNECTOR CONNECTEUR DE TREUIL	0.3	0.3	0.3
10	119	RADIO HARNESS CÂBLAGE RADIO			1.2
10	120	AIR COMPRESSOR HARNESS CÂBLAGE DU COMPRESSEUR D'AIR			1.1

ELECTRICAL SYSTEM
SYSTÈME ÉLECTRIQUE

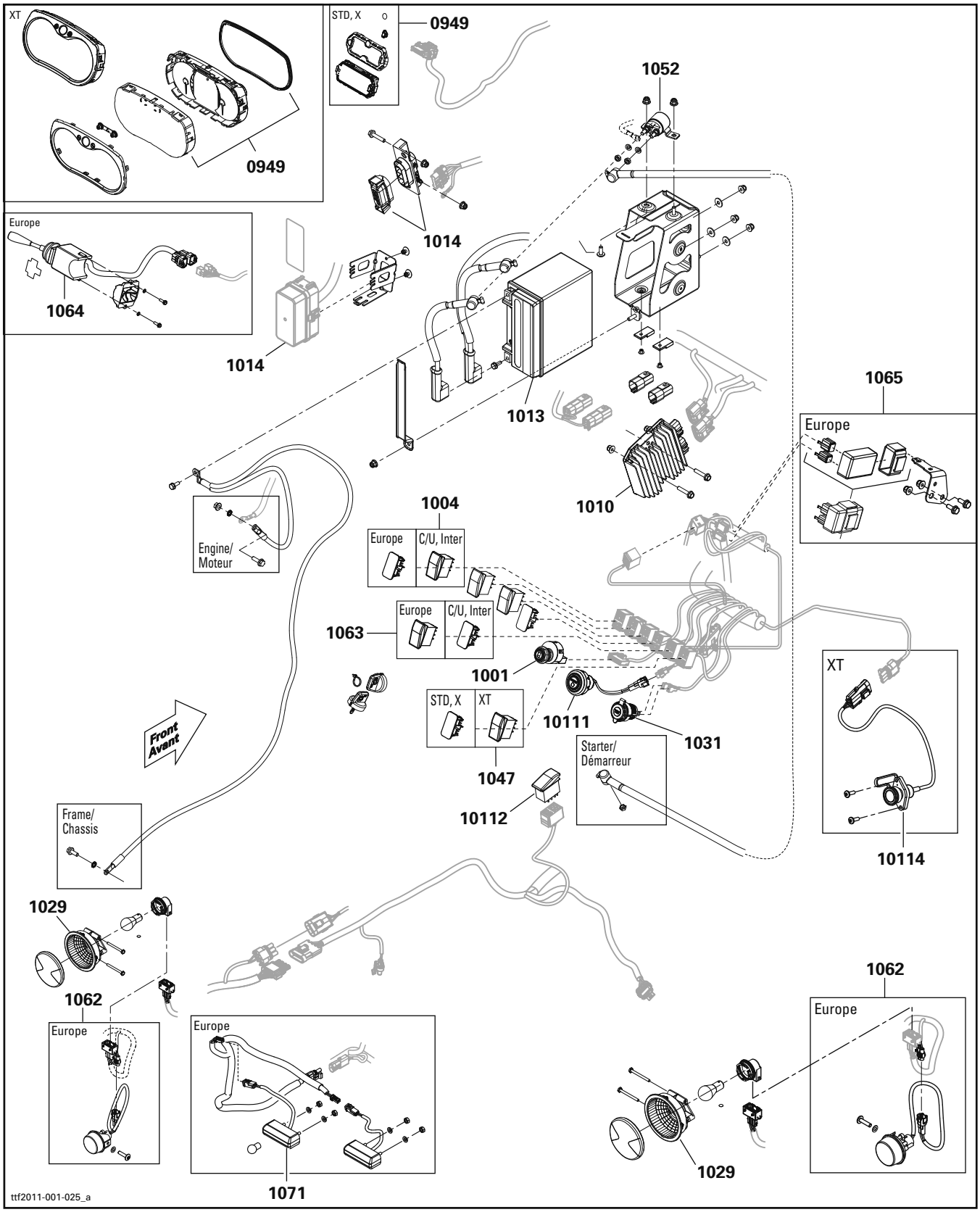

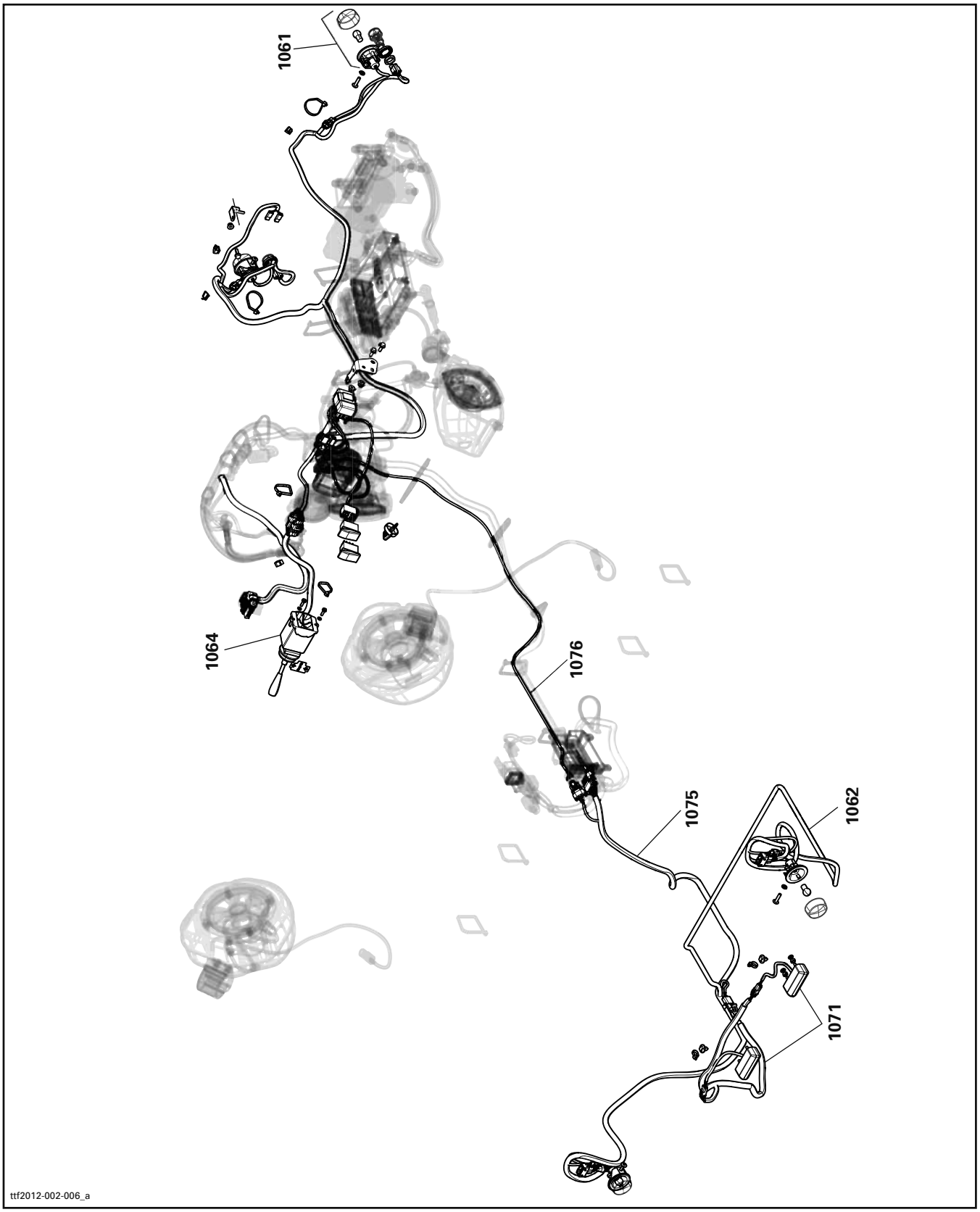
1061
1064
1076
1075
1062
1071
ttf2012-002-006_a

ELECTRICAL SYSTEM
SYSTÈME ÉLECTRIQUE

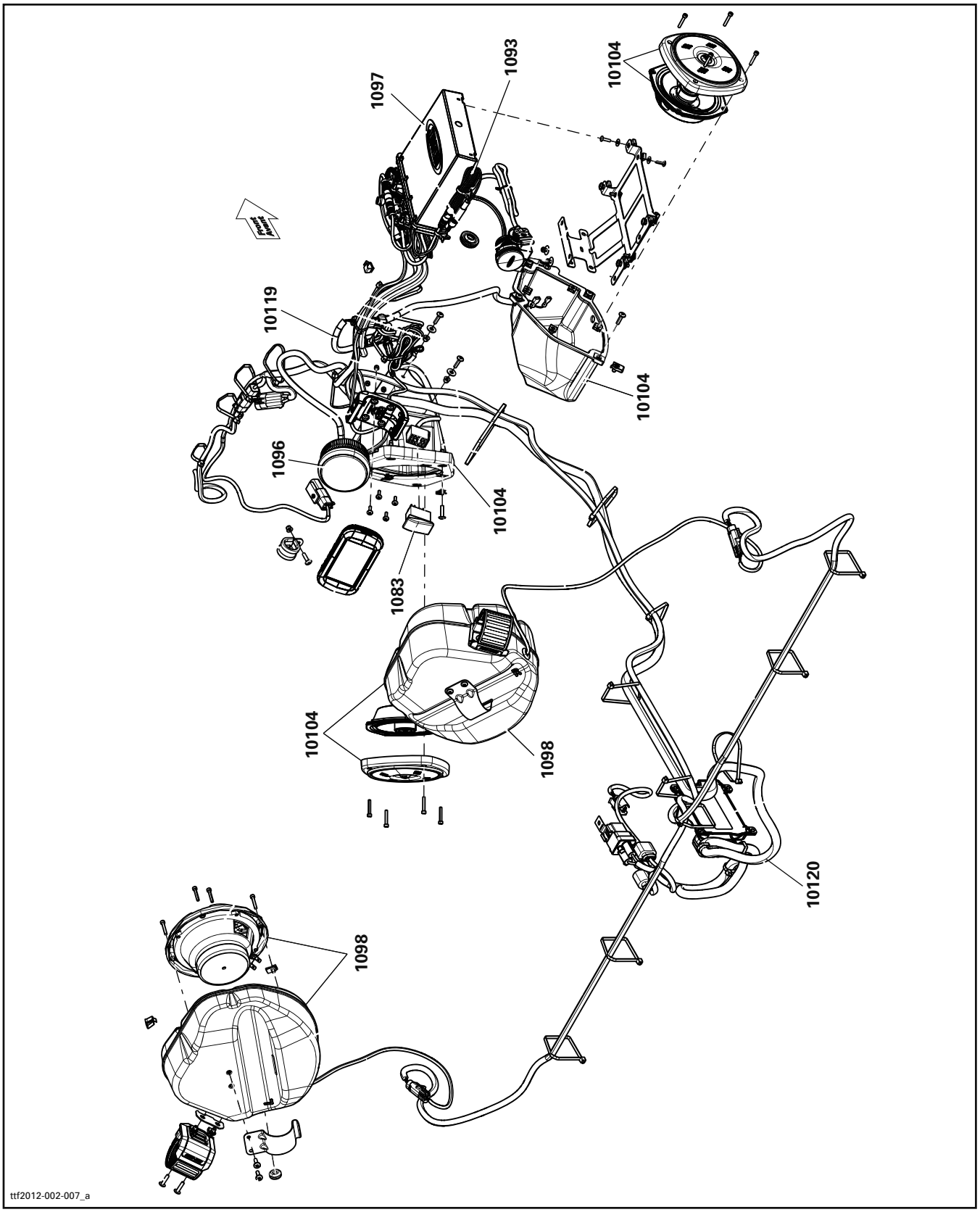

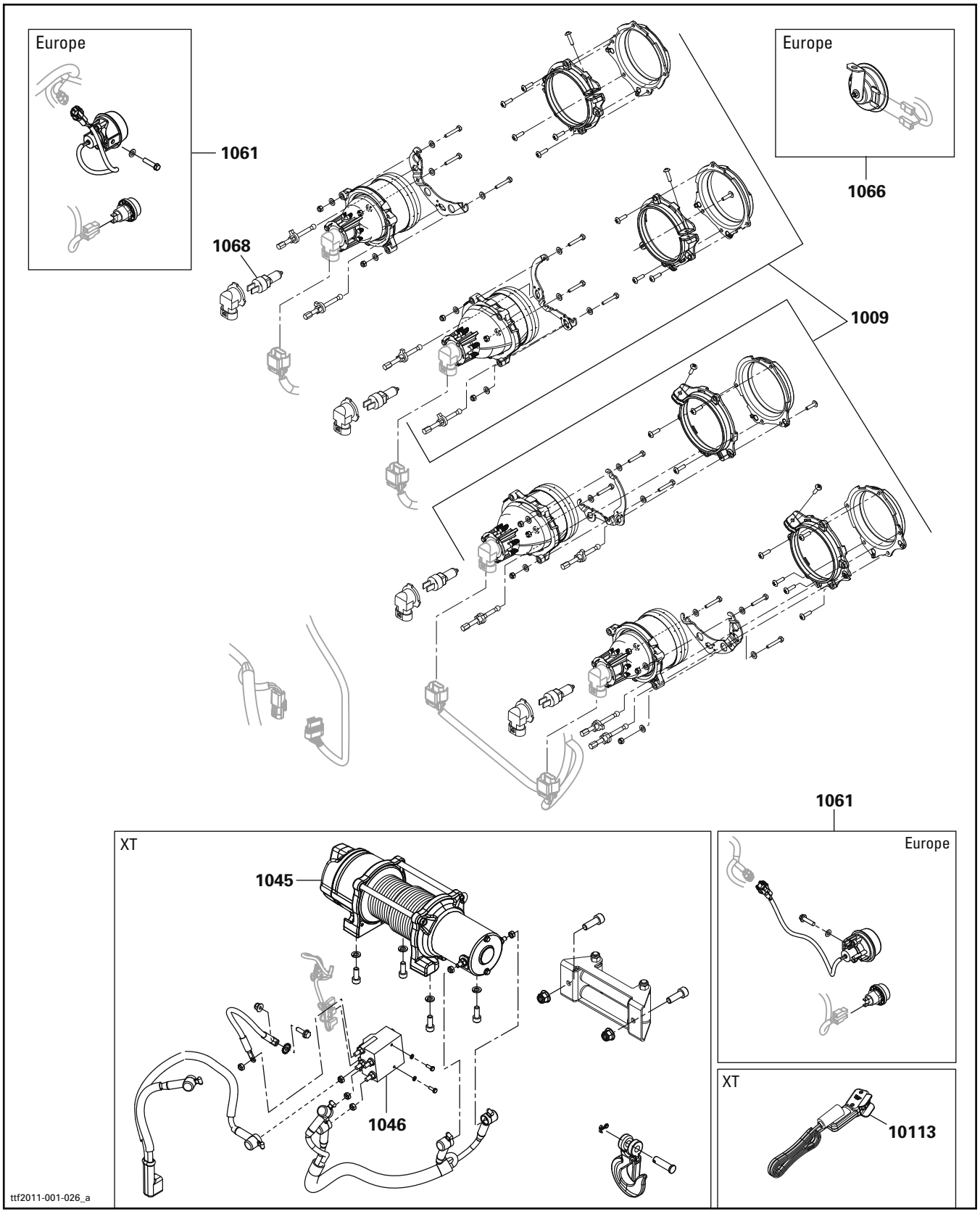
Europe
1061
Europe
1066
1068
1009
1061
XT
1045
Europe
XT
1046
10113
ttf2011-001-026_a

2013

GENUINE PARTS
ACCESSORIES
RIDING GEAR

can-am

BRP

MEET SOME OF OUR CAN-AM RACERS

Looking to build upon its racing success, BRP fields teams of Can-Am racers on both ATVs and side-by-sides in off-road racing in the U.S.A. and Canada.

Meet some of the racers that are prepared to do battle aboard their Can-Am machines proudly showing our bold team look.

JOHN NATALIE

2011 AMA ATV Motocross Pro Champion, Motoworks team member

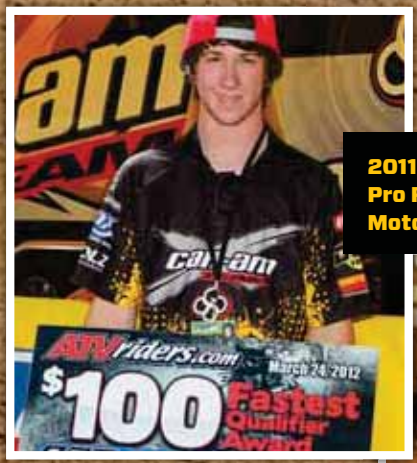

JOEL HETRICK

2011 AMA ATV Motocross Pro Rookie of the year, Motoworks team member

TEAM GORILLA AXLE

Mud-Racing with the Can-Am Outlander 800R X mr, Renegade 800R ATVs and Commander 1000 side-by-side

CHRIS BITHELL

Can-Am Grand National Cross Country XC1 Pro class racer, Motoworks team member

BRYAN BUCKHANNON

2011 Can-Am Grand National Cross Country 4X4 Open Class Champion, Can-Am X-Team member

JOSH FREDERICK

World Off-Road Championship Series Pro Racer, Motoworks team member

For more information on Can-Am racing, the entire race schedule, the contingency program and all amateur racer support programs, visit www.can-amxteam.com or follow Blog.canamoffroad.

IN THE DESERT. IN HIGH ALTITUDE.

Watch the Can-Am 2013 Parts, Accessories & Riding Gear Making Of at store.can-am.brp.com/video

GEAR UP FOR THE ULTIMATE RIDE

At BRP, we know that being fully equipped with the right gear matching your riding style is a must. So based on which of these rider profiles you fit or depending on the outside temperature, we've got you covered.

RACE
ACTIVE RIDER
Lightweight, vented and easy-care apparel that's a winner from top to bottom.

X RACE COLLECTION - Page 5
TEAM COLLECTION - Page 6

ADVENTURE
DISTANCE RIDER
Ergonomic, versatile clothes that adjust to the outside temperature on long rides.

RIDING JACKET & TEAM PANTS - Page 9
INSULATED VEST, CROSS PANTS & TECHNICAL FLEECE - Page 10

RECREATIONAL
WORK & PLAY RIDER
Comfortable attire that combines great value and dependable performance.

CAMO COLLECTION - Page 13
MUD COLLECTION & BOOTS - Page 14
RECREATIONAL & CAMO JERSEYS - Page 15

WINTER
Warm, waterproof, windproof and breathable gear for riders who won't let the cold keep them away from their favorite activities.

WINTER RIDING JACKET & HIGHPANTS - Page 17
RECREATIONAL JACKET, CLASSIC HIGHPANTS, MITTS & GLOVES - Page 18

TECHNICAL WEAR
Base layers are recommended by experts and pros to keep you dry, warm and comfortable, while managing your temperature balance.

ACTIVE, ULTRALIGHT & THERMAL BASE LAYERS - Page 19

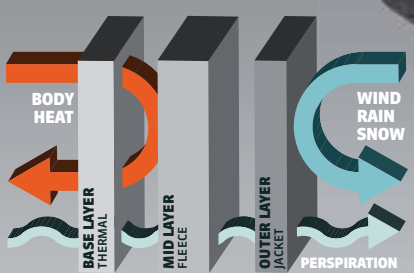

Read the Side-by-Side vehicle (SSV) and All Terrain Vehicle (ATV) Operator's Guide and watch the Safety DVD before driving. For your safety: wear a helmet, eye protection and other protective gear. In your SSV, fasten lateral net and seat belt at all times. Operator must be at least 16 years old. Users should, however, respect any applicable law establishing a higher minimum age for riding an ATV or SSV. BRP urges you to "TREAD LIGHTLY" on public and private lands. Preserve your future riding opportunities by showing respect for the environment, local laws and the rights of others when you ride. Always ride responsibly and safely. BRP highly recommends that all ATV and SSV drivers take a training course. For safety and training information, see your authorized Can-Am dealer or, in the U.S.A., call the ATV Safety Institute at 1-800-887-2887. In Canada, call the Canadian Safety Council at 1-613-739-1535 ext. 227. ATVs and SSVs can be hazardous to operate. Always remember that riding and alcohol/drugs don't mix. SSVs and ATVs are for off-road use only. Never ride on paved surfaces or public roads. Never engage in stunt driving. Avoid excessive speeds and be particularly careful on difficult terrain. Racing scenes in this brochure were photographed during an organized race involving highly skilled operators under controlled conditions. Do not attempt. Can-Am Outlander MAX ATVs: these ATVs are recommended for drivers aged 16 and older, and passengers aged 12 and older only. Make sure that all laws, regulations, and BRP's warnings/recommendations for ATV and SSV passengers are respected. Never carry passengers on any ATV not specifically designed for such use. Never carry a passenger under the age of 12. A passenger must be able to hold handgrips and to comfortably place both feet flat on the floorboard while seated upright. BRP reserves the right, at any time, to discontinue or change specifications, prices, designs, features, models or equipment without incurring obligation. Some models depicted herein may

2013

RIDING GEAR

RACE 4
ADVENTURE 8
RECREATIONAL 12
WINTER 16
TECHNICAL WEAR 19
SPORTSWEAR 22
GLOVES 31
HELMETS 34
GOGGLES 41
BAGS 44
SIZING CHART 45
TECHNICAL TERMINOLOGY 45

PARTS & ACCESSORIES

OUTLANDER 48
RENEGADE 64
DS 450 72
DS 250 77
APACHE 360 TRACK SYSTEM 79
PLOWS 80
WINCHES 85
DECALS 87
MULTI-FIT 87
COMMANDER 90
OFFICIAL LICENSED PRODUCTS 105
TIRES & RIMS 106
OILS & MAINTENANCE 112

include optional equipment. Prices are based on Manufacturer Suggested Retail Prices. Dealers may sell for a different price. Taxes are not included. In the U.S.A., products are distributed by BRP US Inc. In Canada, products are distributed by Bombardier Recreational Products Inc. ™, ® and the BRP logo are trademarks of Bombardier Recreational Products Inc. or its affiliates. CARLISLE is a trademark of Carlisle Companies. CHAMUDE and HIPORA are registered trademarks of Kolon Industries, Inc. CLARINO is a trademark of Kuraray Co. Ltd. COOLMAX and THERMOLITE are registered trademark of INVISTA for durable fabrics. DRIRELEASE is a registered trademark of Optimer Inc. FOX is a trademark of Fox Racing Canada. GARMIN, MONTANA and NÜVI are registered trademarks of Garmin Ltd. iPod is a registered trademark of Apple Inc. KOLPIN, GUN BOOT and IMPACT are registered trademarks of Kolpin Powersports Inc. KYB is a registered trademark of Kayaba. HIGH SIERRA is a trademark of High Sierra Sport Company. LEXAN is a trademark of General Electric (GE). MAX FLOW is a trademark of Moyno, Inc. MCFIT is a registered trademark of MCTECH Corporation. MicroSD is a registered trademark of SD Card Association. Mud Lite XTR and SS312 are trademarks of ITP Tires. NEXT G-1 VISTA is a trademark of Next Camo, LLC. NGK is a registered trademark of NGK Spark Plugs, Ltd. PRIMALOFT ONE and PRIMALOFT CRESTA are registered trademarks of Albany International Corp. TEFLON, TEFLON HT and KEVLAR are trademarks of E.I. DuPont de Nemours & Co. TWINAIR is a trademark of Twin Air USA. UNI is a trademark of UNIFILTER Inc. VELCRO is a registered trademark of Velcro Industries. WARN is a trademark of Warn Industries Inc. X-Static is a registered trademark of Noble Biomaterials Europe srl. YUASA is a registered trademark of YUASA Batteries Inc. ZILLA and BIGHORN 2.0 are trademarks of Maxxis. All other trademarks are the property of their respective owners. © 2012 BRP. All rights reserved. Printed in Canada.

can-am
TEAM

RIDING GEAR

WATCH

A video of the riding gear collection can be viewed online at **store.can-am.brp.com/video**.

RACE
FOR RACE INSPIRED RIDERS WHO WANT TO RIDE LIKE PROS. HIGH PERFORMANCE, MULTI-FUNCTIONAL GEAR FEATURING THE BOLD TEAM LOOK THAT HAS PODIUM-FINISH RIDE WRITTEN ALL OVER IT.
Shop at
store.can-am.brp.com
or at your authorized Can-Am dealer.

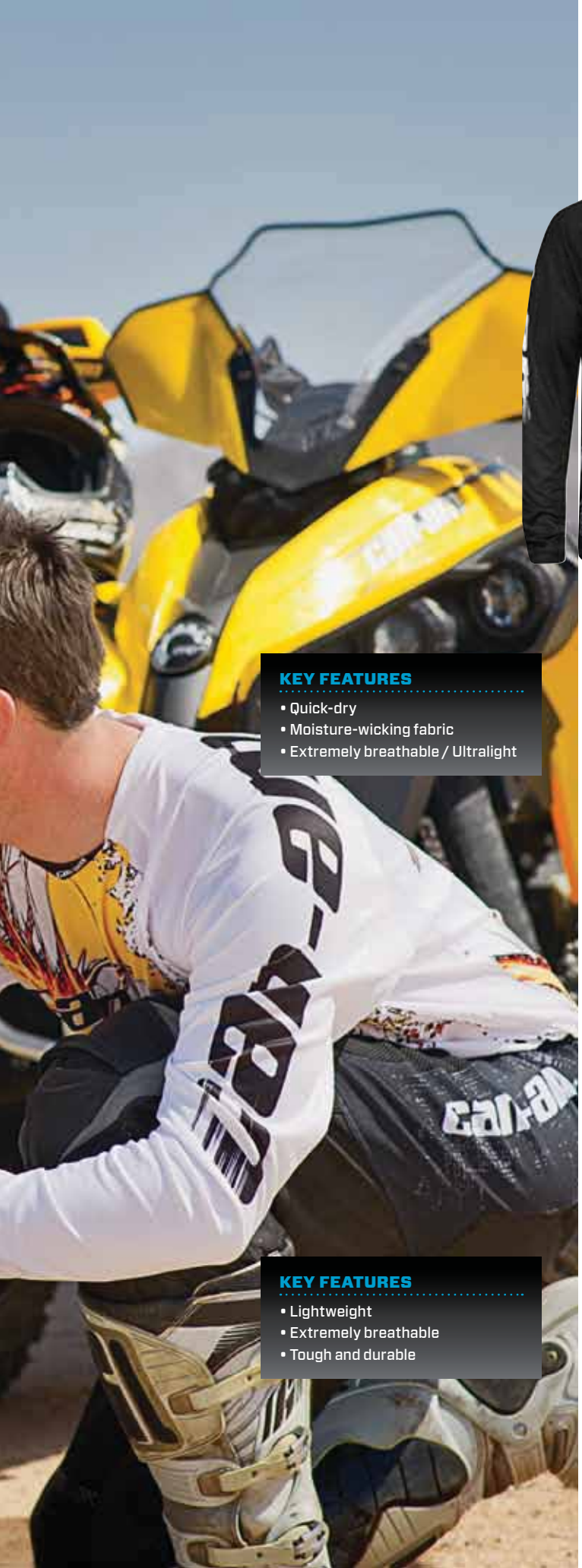

KEY FEATURES
- Quick-dry
- Moisture-wicking fabric
- Extremely breathable / Ultralight

KEY FEATURES
- Lightweight
- Extremely breathable
- Tough and durable

Black (90)

White (01)

BEST SELLER

MEN'S X RACE JERSEY

Ultralight, quick-dry, antibacterial, moisture-wicking fabric. Large mesh panels at back and underarm for maximum breathability. Sonic-injection Can-Am logo on back neck collar. Extended back for coverage while riding. Non-fading sublimated graphics.
Content: 100% Polyester.

S, M, L, XL, 2XL | 286300 | **$49.99**

Yellow (10)

Black (90)

MEN'S X RACE PANTS

Lightweight and extremely breathable pants for riders seeking peak performance, toughness and a competitive edge. Strong nylon outer shell. Overall water-repelling Teflon† treatment, plus light color Teflon HT-treated for additional water and stain resistance. Double and triple stitched construction for enhanced durability. Inner knee debossed fullgrain leather for heat and abrasion resistance. Can-Am sublimated stretch panel on sides. Stretch panel at crotch, knee, back and lower back leg for ease of movement. Rubberized elastic waist to hold jersey in place. Ratchet-style waist closure for better adjustment. Straight hem at leg opening for more comfort inside boots. 3/4 length mesh lining. Content: 54% Nylon, 41% Polyester, 5% Genuine Leather.

30, 32, 34, 36, 38, 40 | 286321 | **$159.99**

KEY FEATURES

- Made of antibacterial and odor-resistant coconut fiber for faster drying

KEY FEATURES

- Breathable and waterproof
- Zip-off legs to convert into shorts
- Highly resistant

Yellow (10) | Warm Gray (15) | Black with graphics (94)

MEN'S TEAM JERSEY

Evaporative, non-fading coconut fiber woven into fabric for faster-drying, antibacterial and odor-resistant performance. Extended back for coverage while riding. Non-fading sublimated graphics. Content: 75% Polyester, 25% Coconut Fiber.

S, M, L, XL, 2XL, 3XL | 286237 | **$44.99**

Yellow (10) | Urban Camo (37) | Black (90)

BEST SELLER

MEN'S TEAM RIDING PANTS

Lightweight, durable, breathable and waterproof nylon shell. Overall water-repelling Teflon treatment, plus light color Teflon HT-treated for additional water and stain resistance. Critical seams sealed. Zip-off legs to convert into shorts. Zipper ventilation on thigh. 2 hip pockets. Velcro† side waist adjustment for custom fit. Double and triple stitched construction and binding hem for reinforcement. Water-resistant stretch panel at crotch and lower back for ease of movement. Jacket-to-pants connector. Rubberized elastic waist. Pre-shaped legs. 3/4 length mesh lining. Content: Nylon.

28, 30, 32, 34, 36, 38, 40, 42, 44 | 286228 | **$109.99**

KEY FEATURES
- Stretch
- Quick-dry
- Moisture-wicking fabric

KEY FEATURES
- Breathable and waterproof
- Zipper ventilation
- Highly resistant

Sand (03) Blue (80) Black (90)

LADIES' TEAM JERSEY

Semi-fitted cut specifically designed for ladies. Stretch, quick-dry, antibacterial, moisture-wicking fabric for maximum comfort. Sleeves with jacquard pattern fabric for extra ventilation. V-neck. Small cuff. Non-fading sublimated graphics. Content: 94% Polyester, 6% Spandex.

XS, S, M, L, XL, 2XL | 286244 | **$44.99**

Black (90)

LADIES' TEAM PANTS

High-tech feminine design for female riders. Lightweight, durable and breathable waterproof nylon shell. Overall water-repelling Teflon treatment. Sealed critical seams. Side leg zipper ventilation. Left zippered hip pocket. Shaped knees with expandable contrasting gussets. Velcro side waist adjustment for custom fit. Double and triple stitched construction for added toughness. Reinforced binding hem with zipper to facilitate exit and entry. Water-resistant stretch panel at crotch and upper back. Jacket-to-pants connector. Can-Am sonic-injection logo on the side of the left thigh. 3/4 length mesh lining. Content: Nylon.

3/4, 5/6, 7/8, 9/10, 11/12, 13/14 | 286234 | **$109.99**

ADVENTURE
KEY FEATURES
• Highly restistant
• Waterproof
• Maximum breathability with multiple vents
DESTINATION RIDERS LOOK FOR ULTIMATE COMFORT FOR DRIVER AND PASSENGER. WEATHERPROOF AND RUGGED TO ENHANCE THE RIDE TO YOUR FAVORITE SPOT.
Shop at
store.can-am.brp.com
or at your authorized Can-Am dealer.

KEY FEATURES

- Breathable and waterproof
- Zip-off legs to convert into shorts
- Highly resistant

Yellow (10) Urban Camo (37) Black (90)

MEN'S RIDING JACKET

Highly resistant, Teflon treatment, plus light color Teflon HT-treated with RPM waterproof, breathable technology. Double-stitch construction throughout. Critical seams sealed. Ventilation at chest, underarms, side seams and at upper back for maximum breathability and good airflow. Two pockets at hips, plus one interior zippered pocket. Double front flap and adjustable wrists, hem and collar. Connector attaching jacket to Team Riding or Cross pants to prevent jacket from riding up. Reflective piping at front and back. Can-Am sonic-injection logo at chest (X-Team rubber patch on Yellow version). Shaped sleeves. Mesh lining. Content: Nylon.

S, M, L, XL, 2XL, 3XL | 286230 | **$159.99**

Yellow (10) Urban Camo (37) Black (90)

BEST SELLER

MEN'S TEAM RIDING PANTS

Lightweight, durable, breathable and waterproof nylon shell. Overall water-repelling Teflon treatment, plus light color Teflon HT-treated for additional water and stain resistance. Critical seams sealed. Zip-off legs to convert into shorts. Zipper ventilation on thigh. 2 hip pockets. Velcro side waist adjustment for custom fit. Double and triple stitched construction and binding hem for reinforcement. Water-resistant stretch panel at crotch and lower back for ease of movement. Jacket-to-pants connector. Rubberized elastic waist. Pre-shaped legs. 3/4 length mesh lining. Content: Nylon.

28, 30, 32, 34, 36, 38, 40, 42, 44 | 286228 | **$109.99**

ADVENTURE
RIDING GEAR

Black (90)

LADIES' RIDING JACKET

Highly resistant, Teflon-treated nylon with RPM waterproof, breathable technology. 500 denier nylon at hem and double stitch construction throughout. Critical seams sealed. Long ventilation at side and underarm, plus additional ventilation at back for maximum airflow. 2 waist pockets and 1 interior zippered pocket. Double front flap and adjustable wrist, hem and collar. Improved collar shape to add comfort while riding. Gusset at back armhole. Jacket-to-pants connector. Reflective piping at upper front and at the back. Sonic-injection Can-Am logo at chest and prints at front and back to fit Ladies' Team Riding Pants. Brushed polyester at inner collar, pocket and wrist for extra comfort. Shaped elbows with expandable contrasting gussets. Mesh lining. Content: Nylon.

XS, S, M, L, XL, 2XL | 286294 | **$169.99**

Black (90)

LADIES' CROSS PANTS

Lightweight durable pants, Teflon HP-treated nylon with RPM waterproof and breathable technology. 500 denier waterproof nylon at crotch and seat. Critical seams sealed. Side leg zipper ventilation. 2 zippered hip pockets with flaps. Jacket-to-pants connector. Binding hem at cuff for reinforcement with zipper to facilitate exit and entry. Pre-shaped legs. Can-Am transfer print at bottom leg. 3/4 length mesh lining. Content: Nylon.

5/6, 7/8, 9/10, 11/12, 13/14 | 286267 | **$149.99**

KEY FEATURES

- Breathable and waterproof
- Zipper ventilation

KEY FEATURES

- Lightweight
- Warm
- Can be worn under a jacket as extra layer
- Men's version can be zipped inside Camo Jacket for extra insulation

Brown (04)

Khaki (05)

Black (90)

MEN'S INSULATED VEST | S, M, L, XL, 2XL, 3XL | 286287 | **$99.99**

Beige (02)

LADIES' INSULATED VEST | XS, S, M, L, XL, 2XL, 3XL | 286288 | **$99.99**

MEN'S & LADIES' INSULATED VEST

Quilted lightweight vest. Delivers unparalleled warmth. Suitable for everyday wear or under a jacket as an extra layer to increase comfort in cold weather. 2 hand pockets. Soft micro-fleece inner collar. Adjustable bottom hem with drawstring and toggles. Reflective details. Men's version can be zipped inside Camo Jacket for extra insulation. Insulation: Primaloft Cresta. Content: Nylon.

Black (90)

NEW

MEN'S TECHNICAL FLEECE

Waterproof, windproof and breathable full-zip softshell. Fleece interior for ultimate comfort. Fleece chin flap. 2 zippered pockets. Can be zipped in Camo Jacket. Loops at end of sleeves connect with it. 3M† reflective print and piping. Pre-shaped sleeves. Content: 100% Polyester.

S, M, L, XL, 2XL, 3XL | 286330 | **$109.99**

Black (90)

MEN'S CROSS PANTS

Lightweight durable pants with RPM waterproof and breathable technology. 500 denier waterproof nylon at crotch and seat plus triple seams at crotch. Critical seams sealed. Side leg 2-way zipper to facilitate exit and double as ventilation. 2 cargo pockets with folded flaps. Jacket-to-pants connector. Perfectly-positioned flaps to protect all openings from infiltration. Binding hem at cuff for reinforcement. Storm gaiter at bottom opening. Velcro side waist adjustment. Elastic at bottom leg to prevent pants from riding up. Shaped knees with expandable contrasting gussets. Mesh lining. Belt loops. Can-Am embroidery on cargo pockets. Content: Nylon.

30, 32, 34, 36, 38, 40, 42 | 286296 | **$149.99**

KEY FEATURES

- Waterproof Next G-1 Vista' Camo fabric
- Matches your Can-Am Camo vehicle
- Inside zipper connecting with either the Can-Am Insulated Vest, the Camo Fleece or the Technical Fleece

APPAREL FOR WORK AND PLAY RIDING THAT DELIVERS GREAT VALUE FOR THE MONEY AND COVERS ALL THE BASICS. RUGGED AND RELIABLE FOR BIG PLAIN FUN!

Shop at
store.can-am.brp.com
or at your authorized Can-Am dealer.

KEY FEATURES

- Waterproof Next G-1 Vista Camo fabric
- Matches your Can-Am Camo vehicle
- Double layer at knee for extra durability

BEST SELLER

Next G-1 Vista Camo (37)

MEN'S CAMO JACKET

Quiet, waterproof Next G-1 Vista Camo fabric. Matches ATV/SSV Camo pattern. All seams sealed. Underarm ventilation system for moisture evacuation. Detachable hood with molded visor and height adjustment drawcord. Collar with 3 different height levels for extra warmth and protection from wind. Watertight neoprene cuff with hook-and-loop tab. Zippered security pockets at chest and two expandable bellows pockets with handwarmer pockets. Internal waist drawcord for adjustment. Articulated elbow and longer back designed for riding position. Nonslip band at shoulders to keep gun strap in place. Relaxed fit allows layering. Inside zipper connecting with Can-Am Insulated Vest, Technical Fleece or Camo Fleece. Can-Am embroidered logo. Content: Polyester.

M, L, XL, 2XL, 3XL | 286282 | **$149.99**

Next G-1 Vista Camo (37)

MEN'S CAMO PANTS

Quiet, waterproof Next G-1 Vista Camo fabric. Matches ATV/SSV Camo pattern. All seams sealed. Double layer at knee for extra durability. Two cargo pockets easily accessible while seated. Full length side zipper. Thin foam at knee and seat for extra comfort. Zippered fly with ratchet closure at waist. Articulated knee and higher backwaist designed for ATV/SSV riding position. Rubberized elastic waist. Brushed tricot lining. Belt loops. Relaxed fit to allow layering. Can-Am embroidered logo. Content: Polyester.

M, L, XL, 2XL, 3XL | 286283 | **$119.99**

Next G-1 Vista Camo (37)

NEW

MEN'S CAMO FLEECE

Full-zip fleece with handwarmer pockets. Screen print with Next G-1 Vista Camo pattern matching ATV/SSV Camo vehicles. Can-Am embroidery at front. Can be zipped inside Camo Jacket for extra insulation and warmth. Content: 100% Polyester.

M, L, XL, 2XL, 3XL | 286363 | **$79.99**

INSIDE ZIPPER CONNECTING WITH CAN-AM INSULATED VEST, CAMO FLEECE OR TECHNICAL FLEECE

MEN'S CAMO FLEECE

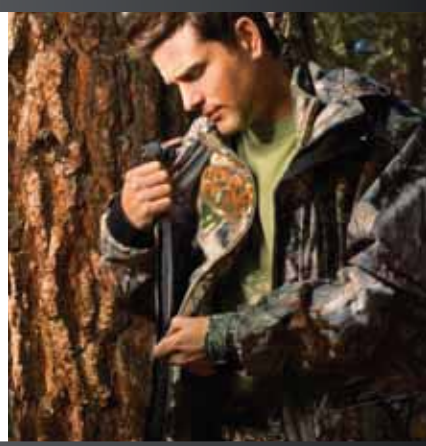

MEN'S INSULATED VEST

See p. 11

MEN'S TECHNICAL FLEECE

See p. 11

RECREATIONAL
RIDING GEAR

Charcoal Gray (07)

Clear (00)

Matte Black (93)

MEN'S BAYOU JACKET

Waterproof DWR-treated nylon fabric. Critical seams sealed. Back ventilation for moisture evacuation. Bellows pocket at left chest. 2 Velcro waist pockets with flap to prevent water intrusion and one interior pocket. Big reflective stripes on shoulder for better visibility. Water deflecting double layer storm flaps. Adjustable wrists and hem. Jacket-in-pouch folds into back pocket for easy traveling. Cozy collar. Pre-shaped sleeves. Can-Am print at front and back. Content: Nylon.

S, M, L, XL, 2XL | 286264 | **$129.99**

BEST SELLER

MEN'S MUD JACKET

100% waterproof PVC. Electronically-welded seams. Underarm and rear vent panels. Two hand pockets. Elastic cuffs. Drawstring hood and hem. On Matte Black version, Can-Am logo at front left chest and upper back vent. On Clear version, Can-Am X-Team logo at front and back and Can-Am logo on sleeves. Content: Polyvinyl Chloride (PVC), Mesh Polyester.

S, M, L, XL, 2XL | 286127 | **$29.99**

Charcoal Gray (07)

MEN'S BAYOU PANTS

Waterproof DWR-treated nylon fabric. Double layer and triple topstitch at seat for durability. Critical seams sealed. 2 practical cargo pockets with flap and gusset at front opening to prevent water intrusion. Adjustable suspenders. Storm gaiters at bottom opening. Adjustable waist. Elastic at bottom leg to prevent pants from riding up. Self fabric gusset at crotch and upper seam for better comfort. Pants-in-pouch folds into inner pocket for easy traveling. Pre-shaped legs. Can-Am print at left leg. Content: Nylon.

S, M, L, XL, 2XL | 286265 | **$104.99**

Clear (00)

Matte Black (93)

MEN'S MUD PANTS

Oversized pants made of 100% waterproof PVC. Electronically-welded seams. Strategically placed ventilation. Side openings at bottom leg. On Matte Black version, Can-Am logo at bottom legs. On Clear version, Can-Am logos on the sides. Content: Polyvinyl Chloride (PVC).

S, M, L, XL, 2XL | 286128 | **$14.99**

Black (90)

MUD BOOTS

Black polyurethane boot with colored sole. One-piece construction for 100% waterproofness. Lightweight, comfortable soft wool liner. Aggressive tread design for style and maximum grip on any surface. Excellent resistance to oils, grease and gasoline. Can-Am branded. Content: 100% Polyurethane.

8, 9, 10, 11, 12, 13 | 444157 | **$99.99**

Next G-1 Vista Camo (37)

White (01) Yellow (10) Black (90)

NEW

MEN'S CAMO JERSEY

Ultralight, quick-dry, antibacterial, moisture-wicking fabric. Extended back for coverage while riding. Non-fading sublimated Next G-1 Vista Camo graphics. Matches ATV/SSV Camo pattern. Content: 100% Polyester.

M, L, XL, 2XL, 3XL | 286350 | **$44.99**

NEW

MEN'S RECREATIONAL JERSEY

Ultralight, quick-dry, antibacterial, moisture-wicking fabric. Extended back for coverage while riding. Non-fading sublimated graphics. Content: 100% Polyester.

S, M, L, XL, 2XL | 286344 | **$39.99**

KEY FEATURES

- Cold temperature performance
- RPM MAX waterproof, windproof and breathable technology
- Shaped elbows with expandable gussets for ease of movement

WARM, WATERPROOF, WINDPROOF AND BREATHABLE GEAR FOR RIDERS WHO WON'T LET THE COLD KEEP THEM AWAY FROM THEIR FAVORITE ACTIVITIES.

KEY FEATURES

- Cold temperature performance
- RPM MAX waterproof, windproof and breathable technology
- Extra warmth at seat and knees

Shop at
store.can-am.brp.com
or at your authorized Can-Am dealer.

Yellow (10) Black (90)

ADVENTURE

BEST SELLER

MEN'S WINTER RIDING JACKET

Robust textured fabric featuring RPM MAX waterproof, windproof and breathable technology. All seams and logos sealed for added protection from water. Vents at underarm and back to enhance moisture evacuation during rigorous riding or mild weather. 2 waist pockets and 1 easy-access Napoleon pocket. MP3, cell phone, cap inner pockets. Front flap with an insulated under flap uniquely designed for off-road riding windproofness. Powder skirt to keep wind, cold and snow from entering. Reflective details. Micro-fleece polyester at collar and micro-fleece integrated inner wrists. Inside front and back panels lined with micro-fleece to add warmth and comfort. Easy-access collar adjustment on both sides. Can-Am and X-Team embroideries. Insulation: Primaloft Cresta. Content: Nylon.

M, MT, L, LT, XL, XLT, 2XL, 3XL | 286295 | **$309.99**

Brown (04)

ADVENTURE

LADIES' WINTER RIDING JACKET

Cold temperature performance jacket with feminine cut. RPM MAX waterproof, windproof and breathable technology. Overall water-repelling Teflon treatment, plus light color Teflon HT-treated for additional water and stain resistance. All seams and logos sealed for added protection from water. Underarm venting. Zippered hand pockets. MP3, cell phone and additional inner pockets. Contrasting water-resistant zipper at chest pocket. Micro-fleece at collar and integrated inner wrist. Powder skirt. Double front flap. Adjustable collar. Reflective details. Shaped sleeves. Insulation: Primaloft Cresta. Content: 100% Nylon.

XS, S, M, L, XL, 2XL | 286362 | **$259.99**

ADVENTURE

BEST SELLER

MEN'S WINTER RIDING HIGHPANTS

RPM MAX waterproof, windproof and breathable technology. Intelligent combination of materials specifically adapted to warmth, weatherproofing and comfort standards required for winter riding. Lightweight and versatile. Composite insulation for extra warmth at seat and knees. 600 denier nylon seat, knees and inner legs. All seams and logos sealed for added protection from water. Pads at knees for durability. Full-length side zip. Easy-access thigh pocket. Reflective ankle detail. Storm gaiter. Accordion knees and pre-shaped legs for ease of movement. Bib-style pants with high back and front to keep wind and snow out. Reinforced topstitch at back rise. Insulation: Primaloft Cresta. Content: Nylon.

M, MT, L, LT, XL, XLT, 2XL, 3XL | 286254 | **$264.99**

Black (90)

ADVENTURE

LADIES' WINTER RIDING HIGHPANTS

Technical, comfortable, versatile with feminine cut. RPM MAX waterproof, windproof and breathable technology. All seams and logos sealed for added protection from water. 1000 denier nylon-lined seat, knees and inner legs. Polar-fleece lined seat and knees. Stretch-fleece bib. Drop seat design. 2-way full-length side zippers. Adjustable waist. Pockets at hips. Water-resistant zipper at right thigh pocket. Reflective details. Shaped knees. Insulation: Primaloft Cresta. Content: 90% Nylon, 10% Polyester.

XS, S, M, L, XL, 2XL | 286361 | **$219.99**

Black (90)

Yellow (10)

Black (90)

Black (90)

NEW

MEN'S HOLESHOT GLOVES

Hipora† waterproof, windproof and breathable glove insert. Added backhand insulation for maximum protection. Thinner-insulated palm for increased sensitivity. Antibacterial, stay-dry moisture management lining. Articulated, shaped fingers. PVC padded knuckles. Extra-grip rubberized palm and thumb. Adjustable gauntlet and wrist. Reflective details. Insulation: Thermal Loft. Content: Nylon.

S, M, L, XL, 2XL | 286343 | **$59.99**

Black (90)

RECREATIONAL

NEW

MEN'S WINTER RECREATIONAL JACKET

RPM waterproof, windproof and breathable technology. Critical seams and logos sealed. 2 waist pockets. Shaped sleeves. Soft micro-fleece inner cuffs. Adjustable Velcro wrists. Powder skirt. MP3 and cell phone pockets. Adjustable hem. Reflective details. Insulation: Thermal Loft. Content: Nylon.

M, MT, L, LT, XL, XLT, 2XL, 3XL | 286326 | **$169.99**

Brown (04)

Black (90)

MEN'S WINTER TRAIL GLOVES

Comfortable and flexible gloves with 4 oz insulation for cold weather. Leather reinforcements at fingers, palm and back hand for extra durability and grip at palm. Waterproof, breathable Hipora insert. Pre-curved design. Clarino† at palm and thumb. Inverted seams at fingers for better comfort. Insulation: Polyester. Content: Nylon, Leather, Polyester, Spandex.

S, M, L, XL, 2XL, 3XL | 286279 | **$44.99**

RECREATIONAL

NEW

MEN'S CLASSIC WINTER HIGHPANTS

Combine classic look with recreational riding performance. RPM waterproof, windproof and breathable technology. Articulated knees. Storm gaiters to shield snow entry. 2-way full-length side zippers. Length adjustment at bottom. Insulation: Thermal Loft. Content: Nylon.

M, L, XL, 2XL, 3XL | 286327 | **$129.99**

Black (90)

Black (90)

MEN'S WINTER RIDING MITTS & GLOVES

New mcFIT† technology to improve grip at palm. Extra warm nylon mitts/gloves with leather palm. Adjustable insulation with removable antibacterial, stay-dry moisture management lining. Reinforced nonslip palm. Visor wiper. 5.5" (14 cm) gauntlet with adjustable wrist. Gloves with visor-wiping cotton terry left thumb for clearing water, snow or fog. Reflective details. Insulation: Primaloft One. Content: Nylon, Leather.

Mitts | S, M, L, XL, 2XL | 286386 | **$79.99**

Gloves | S, M, L, XL, 2XL | 286385 | **$89.99**

Charcoal Gray (07)

Yellow (10)

WINTER BEANIE

Micro-fleece lining. Knitted embroidery. Can-Am logo at front. Content: 50% Acrylic, 50% Wool.

One size | 286289 | **$15.99**

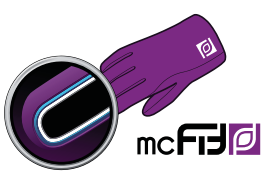

KEY FEATURES

- Maximum comfort fit technology
- Tactility and dexterity
- One layer fitting and superior firm grip

TECHNICAL WEAR

WE KEEP YOU DRY. WE KEEP YOU WARM.

Base layers are recommended by experts and pros to keep you dry, warm and comfortable, while managing your temperature balance. Find out the base layer adapted to your riding style and the degree of insulation and moisture management you need. **Your ride will become even better.**

Which layer should you wear?

You are an intense and active type of rider and you tend to sweat *a lot? Choose the:*

ACTIVE BASE LAYER

KEY BENEFITS

- Never feel too cold or too hot with the X-Static† fiber
- Stay dry even on intense rides
- Large mesh areas keep your thermal balance
- Your layer remains permanently odor-free, antibacterial and antistatic

You are currently layering with casual wear that absorbs humidity and gets damp at the end of the day. Benefit from a lightweight stay dry layer... *Choose the:*

ULTRALIGHT BASE LAYER + ULTRALIGHT SOCKS

KEY BENEFITS

- Stay dry with the Coconut fiber
- Your layer remains odor-free
- Mesh areas keep your thermal balance

Are you the one who's always a little cold? Get special protection to maximize your body heat... *Choose the:*

THERMAL BASE LAYER + THERMAL SOCKS + ULTRALIGHT BASE LAYER + ULTRALIGHT SOCKS

KEY BENEFITS

- Push the moisture away by wearing the Ultralight Base Layer underneath
- Insulate your body and get optimal warmth with the Thermal Base Layer
- Get the best comfort

MID LAYER & OUTER LAYER

Depending on the outside temperature and your activity level, make sure you preserve the right body heat and perspiration by adding a:

> Jersey > Fleece > Vest > Riding Jacket or Winter Jacket > Riding Pants or Winter Pants

ACTIVE BASE LAYER

Thoroughly X-Static† enhanced through to the fiber to thermodynamically regulate your temperature by conducting body heat out in warm weather and reflecting body heat back to the skin in cold weather. Permanently treated for long-lasting antibacterial performance undiminished even after 250+ washes. Silver woven into fiber immediately binds with odor-causing agents such as ammonia and denatured proteins to instantly reduce odor. Extra panels in specific areas for better ventilation and accelerated drying. Compressed for added comfort.
Content: 92% Polyester, 6% Spandex, 2% X-Static.

Black (90)

MEN'S TOP | M, L, XL, 2XL, 3XL | 286332 | **$59.99**

Black (90)

MEN'S BOTTOM | M, L, XL, 2XL, 3XL | 286333 | **$54.99**

ULTRALIGHT BASE LAYER

Coconut fiber actively promotes evaporative cooling and odor absorption, and also filters moisture out while trapping warmth in. Mesh panel in specific areas for better ventilation and accelerated drying. Spandex for ease of movement.
Content: 68% Polyester, 32% Coconut Fiber.

Charcoal Gray (07)

MEN'S TOP | M, L, XL, 2XL, 3XL | 286338 | **$39.99**

Charcoal Gray (07)

MEN'S BOTTOM | M, L, XL, 2XL, 3XL | 286339 | **$29.99**

THERMAL BASE LAYER

Made of high-filament Polyester enhanced by slight brushing to provide softness and warmth. Spandex for ease of movement.
Content: 95% Polyester, 5% Spandex (Brushed).

Charcoal Gray (07)

MEN'S TOP | M, L, XL, 2XL, 3XL | 286334 | **$64.99**

Charcoal Gray (07)

MEN'S BOTTOM | M, L, XL, 2XL, 3XL | 286335 | **$49.99**

Black (90)

WINDPROOF LAYER

Coverage for your crucial body core. Windproof, warm and breathable layer. Stretch fabric and unrestricted arm movement. Zipper on shoulder for easy slip on/off, even with a helmet. Flat locked seams to prevent skin chafing. Content: 100% Polyester.

S, M, L, XL, 2XL | 286348 | **$49.99**

Black (90)

ULTRALIGHT SOCKS

First layer socks for all purposes. Dual polyamide and polypropylene construction for resistance to cold and active management of perspiration moisture. Dri-Release† Wool for ease of care. Stay-up comfort top keeps socks up. Elastic ankle and arch support for pro feel. Ventilated mesh panel maintains feet aerated for dry, warm comfort. Machine washable and dryable. Content: 49% Polyester, 25% Polyamide Nylon, 17% Polypropylene, 7% Merino Wool, 2% Elasthane.

S/M, L/XL | 286340 | **$9.99**

Black (90)

NECK GAITER

Can-Am embroidery. Spandex binding for a better fit. 14 oz anti-pilling fleece. Content: 100% Polyester.

One size | 286331 | **$19.99**

Black (90)

THERMAL SOCKS

Same thickness as competing thermal socks, but lighter, warmer and with better moisture-wicking performance. Thermolite† hollow-core fibers deliver new generation of warmth-comfort fusion. Stay-up comfort top keeps socks up. Elastic ankle and arch support for pro feel. Fully cushioned shin segment. Content: 50% Polyester Thermolite†, 21% Polyamide Nylon, 17% Merino Wool, 5% Acrylic, 2% Elasthane.

S/M, L/XL | 286341 | **$19.99**

White (01)

LADIES' TOP | XS, S, M, L, XL, 2XL | 286336 | **$64.99**

Charcoal Gray (07)

LADIES' BOTTOM | XS, S, M, L, XL, 2XL | 286337 | **$49.99**

Black (90)

MASK SYSTEM BALACLAVA

Perfect when used with BV2S, Modular 2 or the Vision 180° helmet. Keeps you warm while providing breathable and windproof performance. Waterproof, windproof and breathable fabric. Moisture-wicking fabric. Elastic adjustment at side. Contrasting flatlock stitching. Content: 80% Nylon, 20% Spandex.

S/M, L/XL | 447630 | **$29.99**

Black (90)

TECHNICAL BALACLAVA

Strategically placed mesh for breathability. Micro-fleece for warmth. Windproof neck bib. Higher at back of neck for increased motion range. Flatlocked seams prevent skin chafing. Content: 92% Polyester, 8% Spandex.

One size | 445950 | **$24.99**

Black (90)

MOUNTAIN BALACLAVA

Stretch, quick-dry fabric with brushed inner surface. Neoprene face guard for effective moisture exchange to promote breathing in extreme cold, with removable rubber part in pocket. Flatlocked seams prevent skin chafing. Great fit with Cross type helmets. Content: 80% Nylon, 20% Spandex.

One size | 447631 | **$24.99**

Black (90)

MICRO-FLEECE BALACLAVA

Stretch, antibacterial warming fleece fabric with brushed inner surface. Flatlocked seams prevent skin chafing. Content: 92% Polyester, 8% Spandex.

One size | 447565 | **$19.99**

Black (90)

BASIC BALACLAVA

Designed for warmth, dryness and comfort. Flatlocked seams prevent skin chafing. Content: Nylon, Spandex.

One size | 447449 | **$9.99**

SPORTSWEAR
COMPLETE SPORTSWEAR COLLECTION FOR THE CITY AND THE COUNTRY THAT SAYS GENUINE OFF-ROAD LIFESTYLE AS ONLY CAN-AM CAN.
Shop at
store.can-am.brp.com
or at your authorized Can-Am dealer.
Can-Am

Yellow (10)

Red (30)

NEW

MEN'S X-TEAM FLEECE

Pullover racing fleece with handwarmer pockets. X-Team embossed logo at front. Can-Am logo appliqué at sleeves. X-Team embroidery at upper back. Content: 100% Polyester.

S, M, L, XL, 2XL, 3XL | 286329 | **$69.99**

Blue (80)

Black (90)

MEN'S ZIPPED HOODIE

Full-zip hooded sweatshirt. Ribbed waistband and cuffs. "X" print on front chest and on hood. Content: 72% Cotton, 23% Polyester, 5% Spandex.

S, M, L, XL, 2XL | 286312 | **$64.99**

Green (70) Blue (80) Black (90)

MEN'S X-TEAM TEE

Can-Am print at front and X-Team print on right sleeve. Content: 100% Cotton.

M, L, XL, 2XL | 286303 | **$26.99**

Charcoal Gray (07) Black (90)

MEN'S TECHNICIAN SHIRT

Stretch yarn dyed twill shirt. Chest pocket with X-Team embroidery. Large X-Team embroidery at upper back. Hidden button placket. Pleat at back center for ease of movement. Embroidered sponsor logos on sleeves and at front. Content: 65% Polyester, 35% Cotton.

S, M, L, XL, 2XL, 3XL | 286308 | **$64.99**

Black (90) Back

MEN'S X RACE POLO

Quick-dry, antibacterial, moisture-wicking fabric. 3-button front placket. Sublimated non-fading Can-Am logos. Side slits. Rib collar. Content: 100% Polyester.

S, M, L, XL, 2XL, 3XL | 286277 | **$49.99**

Beige (02) Khaki (05) Black (90)

MEN'S OUTLANDER TEE

Outlander print at front. Content: 100% Cotton.

M, L, XL, 2XL, 3XL | 286291 | **$24.99**

Ice (38) Black (90)

MEN'S AUTHENTIC TEE

Can-Am vintage crackled logo on chest. Garment enzyme-washed for soft and vintage handfeel. Content: 100% Cotton.

S, M, L, XL, 2XL, 3XL | 286364 | **$22.99**

White (01) Khaki (05) Black (90)

BEST SELLER

MEN'S SIGNATURE TEE

Can-Am print at front. Content: 100% Cotton.

S, M, L, XL, 2XL, 3XL | 286320 | **$14.99**

Brown (04) Black (90)

MEN'S TRACK TEE

Can-Am print at front. Contrasting collar and stitches. Content: 100% Cotton.

S, M, L, XL, 2XL, 3XL | 286293 | **$24.99**

White (01) Black (90)

NEW

MEN'S RENEGADE TEE

Printed logo at front. Contrasting stitches. Content: 100% Cotton.

M, L, XL, 2XL | 286302 | **$26.99**

White (01) Black (90)

NEW

MEN'S COMMANDER TEE

Commander print at front. Content: 100% Cotton.

S, M, L, XL, 2XL | 286345 | **$26.99**

Yellow (10) Black (90)

MEN'S X-TEAM TURTLENECK

Stretch fabric. Rib fabric collar and wrist. X-Team and Can-Am logos. Content: 95% Cotton, 5% Spandex.

M, L, XL, 2XL | 286328 | **$29.99**

Black with graphics (94)

NEW

TUBE

Multi-purpose, stretch and comfortable tubular headwear. 12 different configurations: bandana, headband, balaclava and more. Protects from sun, wind, dust or cold. Keeps hair out of face. Flat locked seams to avoid skin chafing. Content: 94% Cotton, 6% Spandex.

One size | 286349 | **$14.99**

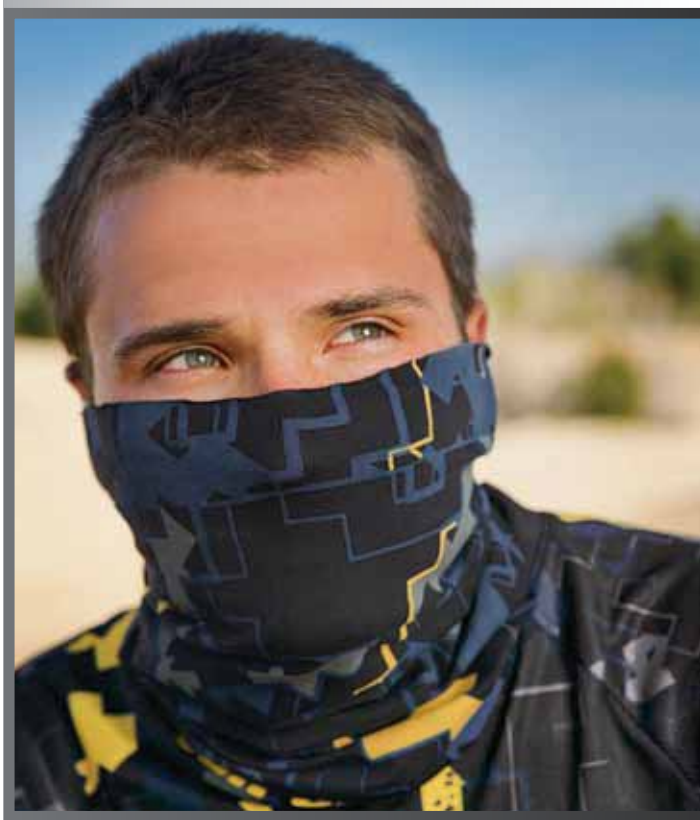

Gray (09) Black with graphics (94)

NEW

BANDANA

Light and comfortable. Multiple wear options. Content: 80% Polyester, 20% Cotton.

One size | 286347 | **$9.99**

White (01)

Black (90)

Black (90)

MEN'S GENUINE CAP
Adjustable cap. Mesh back panels let your head breathe. 3D Can-Am embroidery on contrasting peak. Wood print at front. Content: 55% Cotton, 45% Nylon.

One size | 286324 | **$19.99**

BEST SELLER

MEN'S X RACE CAP
Fitted stretch twill cap with prints. X-Team embossed logo at back. Embroidery of critter under peak. Content: 98% Cotton, 2% Spandex.

S/M, L/XL | 286325 | **$19.99**

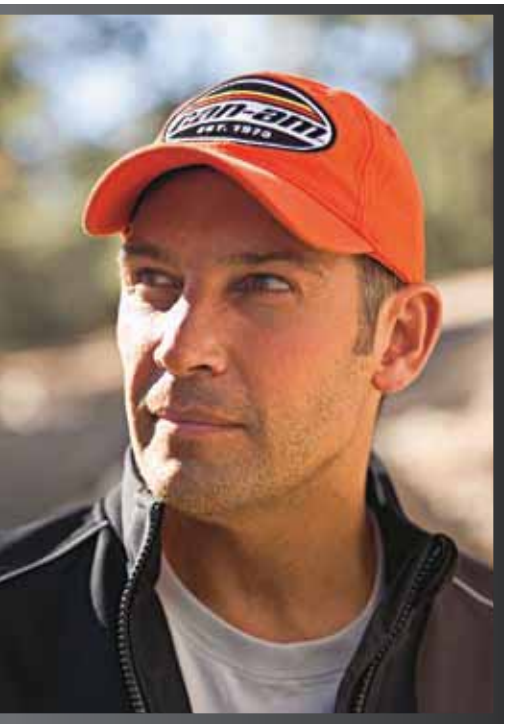

Charcoal Gray (07)

Black (90)

MEN'S CLASSIC CAP
Ultra comfortable, stretch, lightweight fabric. 3D Can-Am embroidery at front. Metal adjuster with BRP logo. Content: 72% Polyester, 23% Rayon, 5% Spandex.

One size | 286210 | **$21.99**

Warm Gray (15)

Yellow (10)

MEN'S TEAM CAP
3D Can-Am embroidery with print. Rubber details on sides and peak. Velcro closure at back. Content: 97% Polyester, 3% Spandex.

One size | 286270 | **$19.99**

Fire Red (06)

Gray (09)

Black (90)

MEN'S AUTHENTIC CAP
Adjustable canvas hat. Vintage logo embroidered at front. Metal adjuster with BRP logo. Content: 100% Cotton.

One size | 286211 | **$21.99**

Beige (02)

Brown (04)

Charcoal Gray (07)

MEN'S OUTLANDER CAP
Outlander rubber logo at front. Mud track embossed at front left side. Metal adjuster with BRP logo. Content: 100% Cotton.

One size | 286292 | **$19.99**

Magnesium (24)

Red (30)

Black (90)

NEW

MEN'S COMMANDER CAP

Fitted stretch cap. Commander rubber logo at front. Rubber details on sides and peak. Content: 95% Cotton, 5% Spandex.

S/M, L/XL, 2XL | 286346 | **$19.99**

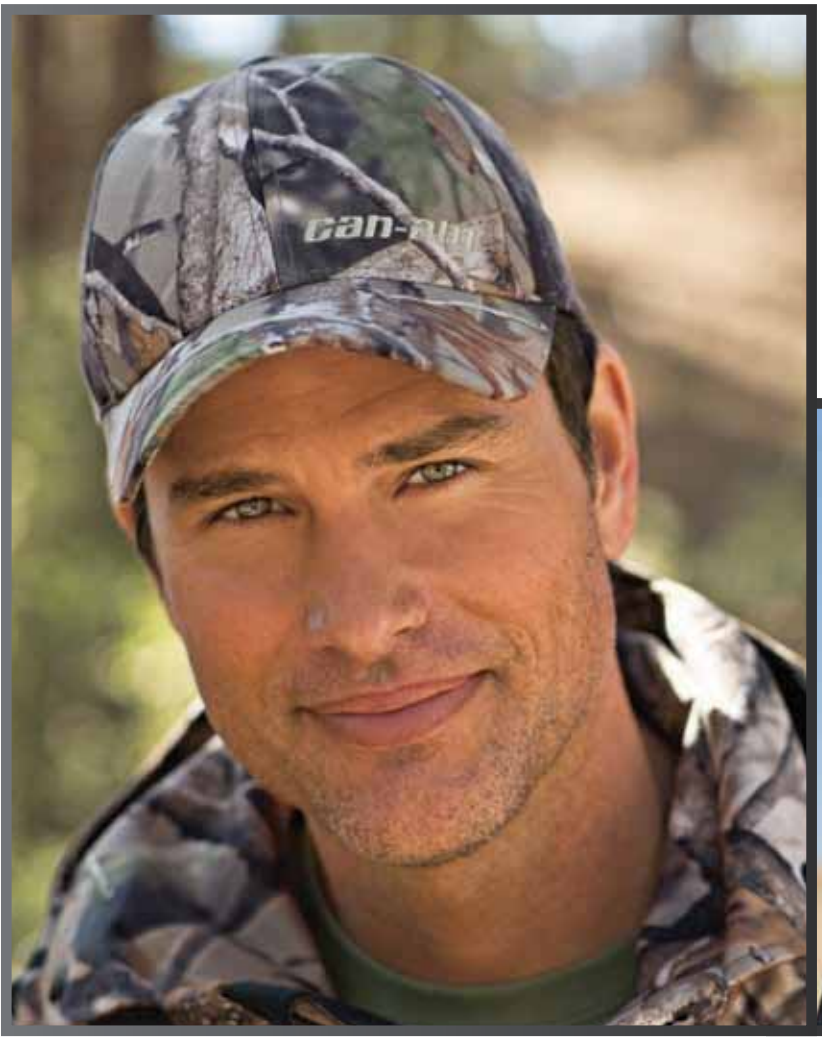

Next G-1 Vista Camo (37)

BEST SELLER

MEN'S CAMO CAP

Matches ATV/SSV Camo pattern. Can-Am logo embroidery at front. Metal adjuster with BRP logo. Content: 100% Polyester.

One size | 286290 | **$14.99**

Sand (03)

Black (90)

MEN'S TRACK CAP

Adjustable canvas cap. 3D Can-Am logo at front. Contrasting peak with embroideries. Metal adjuster with BRP logo. Content: 100% Cotton.

One size | 286275 | **$19.99**

Charcoal Gray (07)

Black (90)

SUMMER BEANIE

Lightweight, plaid texturized knitted beanie with one contrast square and woven Can-Am label. Content: 95% Cotton, 5% Spandex.

One size | 286323 | **$15.99**

White (01) Coral (13) Blue (80) Black (90)

Coral (13)

Blue (80)

Black (90)

LADIES' X-TEAM TEE

V-neck. Stretch fabric. Lace print on front and Can-Am X-Team print on back left shoulder. Content: 95% Cotton, 5% Spandex.

XS, S, M, L, XL, 2XL | 286319 | **$26.99**

NEW

TUBE

Multi-purpose, stretch and comfortable tubular headwear. 12 different configurations: bandana, headband, balaclava and more. Protects from sun, wind, dust or cold. Keeps hair out of face. Flat locked seams to avoid skin chafing. Content: 94% Cotton, 6% Spandex.

One size | 286349 | **$14.99**

Coral (13) Ice (38) Black (90)

NEW

LADIES' ZIPPED MICRO-FLEECE

Full-zip feminine-fit micro-fleece. 2 zippered pockets. Contrast cord, pocket lip flaps (except Ice version). Can-Am embossed signature at front bottom and right back shoulder. Flatlock stitch. Content: 100% Polyester.

XS, S, M, L, XL, 2XL | 286304 | **$64.99**

Green (70) Black (90)

Lilac (25) Black (90)

LADIES' STAR TEE

Fitted t-shirt. Feminine round neck with small gathering details at front. Print with sparkle details. Can-Am logo next to collar. Content: 95% Cotton, 5% Spandex.

S, M, L, XL | 286276 | **$24.99**

BEST SELLER

LADIES' AUTHENTIC TEE

Fitted feminine t-shirt. V-neck with vintage crackled print at front. Content: 95% Cotton, 5% Spandex.

S, M, L, XL, 2XL | 286365 | **$22.99**

White (01)

Black (90)

LADIES' STAR CAP

Feminine-style cap made from ripstop lightweight fabric. Print at front. Can-Am embroidery on left side. Stretchable thanks to back elastic. Content: 100% Cotton.

S/M, L/XL | 286271 | **$19.99**

Mixed Color (18)

NEW

BANDANA

Light and comfortable. Multiple wear options. Content: 80% Polyester, 20% Cotton.

One size | 286347 | **$9.99**

KIDS & TEENS
RIDING GEAR

SPORTSWEAR

Yellow (10)

TEEN RACE JERSEY
Made from quick-dry, antibacterial, moisture-wicking fabric. Extended back for riding position. Sublimated print. Content: 100% Polyester.

7/8, 10/12, 14/16 | 286202 | **$39.99**

Red (30)

KIDS' TEE
New red version. Cartoon print at front. Content: 100% Cotton.

2, 3/4, 5/6 | 286366 | **$21.99**

GOGGLES

Black (90)

JUNIOR TRAIL GOGGLES
Large urethane frame for strength, flexibility and style. Hypoallergenic face foam. Scratch-resistant clear lens for good visibility in all conditions. Silicone-backed strap system for slip-free performance.

One size | 447568 | **$29.99**

GLOVES

Black (90)

BEST SELLER

TEEN TEAM RIDING GLOVES
Spandex construction for great flexibility. Chamude palm. Pre-curved design. Direct-injection patches on back hand. Hook-and-loop wrist closure system. Content: Spandex, Chamude.

6/8, 10/12, 14/16 | 286203 | **$24.99**

HELMETS

Black with graphics (94)

VOLCANO JUNIOR CROSS HELMET
High-tech, lightweight and tough. Fully-adjustable, aero-tuned peak. Ventilation system. Moisture-wicking and breathable chin strap, liner and cheek pads. Easily removable and washable liner and cheek pads. Provides maximum visibility. Fits all goggles. Strap grip to hold goggle strap in place. D.O.T. certified. Weight: Medium = ± 1050 g. Shell: ABS.

S, M, L | 447512 | **$99.99**

Orange (12)

X-1 BLAZE JUNIOR CROSS HELMET
High-tech, lightweight and tough. Fully-adjustable, aero-tuned peak. Ventilation system. Moisture-wicking and breathable chin strap, liner and cheek pads. Easily removable and washable liner and cheek pads. Provides maximum visibility. Fits all goggles. Breath deflector mask included. Strap grip keeps goggle strap in place. Can-Am labels included. D.O.T. certified. Weight: Medium = ± 1050 g. Shell: ABS.

S, M, L | 447673 | **$109.99**

GLOVES

FOR A WIDE SELECTION OF GREAT LOOKING GLOVES THAT PROVIDE LASTING PROTECTION AND THE FLEXIBILITY YOU NEED TO MANEUVER COMFORTABLY, THESE ARE THE VERY BEST, HANDS DOWN.

Shop at
store.can-am.brp.com
or at your authorized Can-Am dealer.

Black (90)

Blue (80)

LADIES' X RACE GLOVES

Air mesh panel for maximum ventilation and mobility. Double Clarino layer at palm and thumb for extra durability and comfort. Pre-curved design. Silicone fingertips for added grip and control. Direct-injection details on back hand. Hook-and-loop wrist closure system. Content: Synthetic Leather, Polyester, Lycra, Nylon, Neoprene.

S, M, L, XL, 2XL | 286322 | **$34.99**

White (01)

Yellow (10)

Black (90)

BEST SELLER

MEN'S X RACE GLOVES

Designed for protection and flexibility. Air mesh panels for ventilation and mobility. Perforated palm for ventilation. Double Clarino layer at palm and thumb for extra durability and comfort. Knuckle gussets for better mobility. Pre-curved design. Silicone at fingertip and at palm for better grip. Direct-injection details on back hand. Hook-and-loop wrist closure system to keep glove in place. Content: Air Mesh, Spandex, Clarino.

S, M, L, XL, 2XL | 286297 | **$34.99**

Warm Gray (15)

Black (90)

Matte Black (93)

MEN'S TEAM RIDING GLOVES

Spandex construction for flexibility. Chamude palm. Pre-curved design. Direct-injection logo and print on back hand. Hook-and-loop wrist closure system.
Content: Spandex, Chamude.

S, M, L, XL, 2XL, 3XL | 286229 | **$26.99**

White (01)

Yellow (10)

Black (90)

NEW

MEN'S RECREATIONAL GLOVES

Spandex construction for flexibility. Clarino nash palm. Pre-curved design. Non-fading sublimated graphics matching with Recreational Jersey. Hook-and-loop wrist closure system.
Content: 45% Clarino, 44% Polyester, 6% Lycra, 5% Airprene.

S, M, L, XL, 2XL | 286342 | **$19.99**

KEY FEATURE

- Quick and easy access to trigger at forefinger*

Brown (04)

Black (90)

MEN'S TRAIL GLOVES

Flexible gloves. Leather reinforcements at fingers, palm and back hand for extra durability. Hipora† insert at back hand to add water resistance without compromising grip at palm. Pre-curved design. Clarino at palm and thumb. Inverted seams at fingers for better comfort. Content: Nylon, Leather, Polyester, Spandex.

S, M, L, XL, 2XL, 3XL | 286268 | **$39.99**

Next G-1 Vista Camo (37)

BEST SELLER

MEN'S CAMO GLOVES

4 oz insulation for cold weather. Additional leather layer at palm for more durability and better grip. Waterproof, breathable Hipora insert. Velcro wrist adjustment. Pre-shaped fingers. Large gauntlet for wearing over jacket. *Glove not completely waterproof at forefinger. Insulation: Polyester. Content: Polyester, Leather.

M, L, XL, 2XL, 3XL | 286284 | **$49.99**

HELMETS

WHETHER YOU RACE, HAUL CARGO OR SIMPLY EXPLORE, THE ENGINE THAT REALLY MATTERS IS IN YOUR HEAD. PROTECT IT WITH HELMETS THAT MATCH YOUR RIDING GEAR, LOOK GREAT AND KEEP YOUR HEAD IN THE GAME.

Shop at
store.can-am.brp.com
or at your authorized Can-Am dealer.

XP-2

High-tech, lightweight and tough fiberglass/Kevlar† matrix shell. Fully-adjustable, aero-tuned visor reduces lift at high speeds. Ventilation system. Moisture-wicking and breathable chin strap, liner and cheek pads. Easily removable and washable liner and cheek pads. Provides maximum visibility, fits all goggles. Strap grip keeps goggle strap in place. AMA Competition Rules Compliant. Weight: Large = ± 1550 g.

XC-3

Lightweight and tough Advanced Polycarbonate Composite shell. Equipped with air pump adjustable cheek pads activated by finger pressure for better fit. New chinbar, rubber nose roost shield for deflecting more debris without reducing goggle/eye port area. Fully-adjustable, aero-tuned visor reduces lift at high speeds. Ventilation system. Moisture-wicking chin strap, liner and cheek pads. Easily removable and washable custom liner and cheek pads. Provides maximum visibility and fits all goggles. Strap grip to hold goggle strap in place. Weight: Large = ± 1700 g.

KEY FEATURES

- Lightweight and tough Advanced Polycarbonate Composite shell
- Get the best fit of all with the air pump adjustable cheek pads activated by finger pressure

XP-2

Yellow (10)

Red (30)

XP-2 BOOST HELMET

Snell M2010 and D.O.T. approved. Shell: Lightweight Fiberglass/Kevlar.

XS, S, M, L, XL, 2XL | 447682 | **$219.99**

XC-3

Yellow (10)

Red (30)

BEST SELLER

XC-3 HOLESHOT HELMET

Snell M2010 and D.O.T. certified. Shell: Polycarbonate Composite.

XS, S, M, L, XL, 2XL | 447514 | **$149.99**

Black (90)

Urban Camo (37)

XC-3 HELMET

Snell M2010 and D.O.T. certified. Shell: Polycarbonate Composite.

XS, S, M, L, XL, 2XL | 447604 | **$139.99**

XC-3 CAMO HELMET

D.O.T. approved. Shell: Polycarbonate Composite.

XS, S, M, L, XL, 2XL | 447692 | **$149.99**

XP-R2

Our best-of-the-best M.D.C.F. (Multi Directional Carbon Fiber) lightweight helmet with carbon and aramid fiber reinforced shell. Weight for "L" size model only +/- 1275 g. NEW tool-less multi adjustable wide angle front peak with anti-reflecting sticker directly below to deflect glare. NEW flexible face trim design with a large nose protector area for better protection. NEW anti-slip goggle strap design. EPS foam upper insert between inner fabric and outer shell for optimized user protection. Integrated rear fin for added stability and aerodynamic performance. Double D racing buckle and pocket for sweat absorbent front pad. Removable and washable cheek and head pads. Morpho System Plus ergonomic 3D cheek pads available in your size. Surround comfort sanitized treated interior with Coolmax moisture-wicking action. F.A.S. (Full Air System) with 10 ventilation points and double rear extractor. Aluminum screws, protective coated parts. Ergonomic helmet bag. AMA Competition Rules Compliant. D.O.T. approved. Shell: Carbon Fiber Composite. Weight: Large = ± 1275 g.

Black (90)

XP-R2 CARBON LIGHT HELMET

XS, S, M, L, XL | 447656 | **$479.99**

White (01)

Yellow (10)

XP-R2 CARBON LIGHT MAVERICK HELMET

XS, S, M, L, XL | 447660 | **$499.99**

Orange (12)

Bronze (92)

White (01)

XP-R / XP-R2 HELMET SWEAT ABSORBENT PAD

Pack of 10 pads.

One size | 447435 | **$7.99**

BEST SELLER

XP-R2 CARBON LIGHT BLAZE HELMET

XS, S, M, L, XL | 447657 | **$499.99**

NEW **DUST MASK**

Incredible new product that will protect your breathing while riding. Easily replaceable filters remove 99.9% of airborne dust, particles, pollen and odors. The mask is made from soft yet durable neoprene material that fits snugly under helmets and goggles. Convenient MP3 player pocket on the side. XS/S fits most kids 12 and under, M/L fits most riders and XL/2XL fits larger frames (235+ lbs). Includes 2 replacement filters and a small storing pouch.

DUST MASK

Black (90)

ORIGIN DUST MASK

XS/S, M/L, XL/2XL | 447718 | **$29.99**

Yellow (10)

X RACE DUST MASK

XS/S, M/L, XL/2XL | 447720 | **$29.99**

Purple (40)

LADIES' DUST MASK

XS/S, M/L, XL/2XL | 447721 | **$29.99**

Urban Camo (37)

CAMO DUST MASK

XS/S, M/L, XL/2XL | 447722 | **$29.99**

White (01)

DUST MASK REPLACEMENT FILTERS

XS/S, M/L, XL/2XL | 447719 | **$6.99**

X-1

High-tech, lightweight and tough. Fully-adjustable, aero-tuned peak. Ventilation system. Moisture-wicking and breathable chin strap, liner and cheek pads. Easily removable and washable liner and cheek pads. Provides maximum visibility. Fits all goggles. Strap grip keeps goggle strap in place. D.O.T. certified. Weight: Large = ± 1400 g. Shell: ABS.

White (01)

Yellow (10)

NEW **X-1 TEAM CROSS HELMET**

XS, S, M, L, XL, 2XL | 447688 | **$99.99**

ST-1 HYBRID HELMET

Multiple functionalities when fitted with optional jaws. Outer shell ventilation features include 2 ventilation tab kits with anti-fog spray kit, triple configuration flexibility (jet, vented and full face), continuous top ventilation and exhaust. Double D ring closure. Anti-scratch, retractable sun visor. Moisture-wicking and breathable removable liner and cheek pads. D.O.T. approved. Shell: Polycarbonate Composite.

White (01)

Magnesium (24)

Black (90)

ST-1 HYBRID HELMET

XS, S, S/M, M/L, L, XL | 447427 | **$329.99**

Black (90)

Magnesium (24)

White (01)

ST-1 HYBRID FULL FACE JAW

Transforms the ST-1 Hybrid Helmet into a standard full face helmet for extra wind protection.

One size | 447428 | **$69.99**

Black (90)

Magnesium (24)

White (01)

ST-1 HYBRID VENTED JAW

Transforms the ST-1 Hybrid Helmet into a jet ventilated full face helmet for enhanced protection with ventilation comfort.

One size | 447429 | **$69.99**

Clear (00)

ST-1 HYBRID SINGLE PANE VISOR - LONG

Optically-correct shield with hardcoated anti-scratch technology.

One size | 447430 | **$49.99**

Clear (00)

ST-1 HYBRID SINGLE PANE VISOR - SHORT

Optically-correct shield with hardcoated anti-scratch technology.

One size | 447431 | **$49.99**

ST-3 OPEN FACE HELMET

Vent system on top. Double density inner shell. Non-allergenic and breathable internal lining. Clear visor with anti-scratch treatment. D.O.T. approved. Shell: Polycarbonate Composite.

ST-3

Silver (08)

Black (90)

Smoke 60% (21)

ST-3 OPEN FACE TINTED VISOR

Tinted visor with anti-scratch treatment.

One size | 447598 | **$19.99**

ST-3 OPEN FACE HELMET

XS, S, M, L, XL, 2XL | 447464 | **$89.99**

BV2S HELMET

BV2S fog-resistant mask system with unparalleled adjustment capabilities to adapt to all faces. Integrated backlight. Dual lens visor featuring enhanced 180° peripheral vision. Adjustable sunshield. Front push-button release. Detachable breathing mask. Quick-release chin strap. Washable interior. Backlight batteries included. D.O.T. approved. Shell: Polycarbonate Composite.

BV2S

BV2S HELMET

S, M, L, XL, 2XL, 3XL | 447404 | **$449.99**

Red (30)

BV2S ELECTRIC SE HELMET (Not illustrated)

S, M, L, XL, 2XL, 3XL | 447468 | Black (90) | **$529.99**

White (01) | Yellow (10) | Black (90) | Matte Black (93)

White (01)

BV2S ABSORBENT MASK

Pack of 5.

One size | 447282 | **$7.99**

Black (90)

HELMET LIGHTING SYSTEM KIT

Batteries not included.

One size | 447465 | **$39.99**

Orange (12)

BV2S SUNSHIELD VISOR

One size | 445720 | **$59.99**

Clear (00)

BV2S HELMET ELECTRIC VISOR

One size | 447517 | **$169.99**

Clear (00)

BV2S HELMET REPLACEMENT VISOR

One size | 447508 | **$109.99**

MODULAR 2

Built-in Clear Vision Technology with optically-correct dual lens visor for increased peripheral vision and integrated sunshield for reduced glare. Adjustable sunshield lowers or raises at the touch of a button. Front push-button release integrated into jaw section facilitates manipulation when wearing gloves. BREATH EVAC fog-resistant mask system and increased vent diameter to control breathing airflow. Quick-release micrometric chin strap. D.O.T. approved. Shell: Polycarbonate Composite.

MODULAR 2

White (01) Grey (09) Yellow (10)

Red (30) Black (90)

MODULAR 2 HELMET

S, M, L, XL, 2XL, 3XL | 447521 | **$329.99**

Clear (00)

MODULAR 2 REPLACEMENT VISOR

Sun visor not included.

One size | 445967 | **$99.99**

Clear (00)

MODULAR 2 HELMET ELECTRIC VISOR

Sun visor not included.

One size | 447516 | **$149.99**

Black (90)

MODULAR 2 ELECTRIC SE HELMET

S, M, L, XL, 2XL, 3XL | 447652 | **$399.99**

Smoke (57)

MODULAR 2 SUN VISOR

Anti-scratch.

One size | 445971 | **$59.99**

White (01)

MODULAR & MODULAR 2 ABSORBENT MASK

Pack of 10.

One size | 445953 | **$7.99**

VISION 180°

Breath deflector upgraded for improved fit on face and increased visibility. New resized vented chin skirt allows better airflow inside helmet and easier head entry into the helmet. Cheek pads improved for a tighter and more comfortable fit. Sun visor enhanced with new anti-fog treatment. New aluminum visor screws for superior visor adjustment. The best quality-for-price on the market. Inspired by original Modular 2 helmet that reinvented snowmobiling. Clear Vision Technology with optically-correct dual lens visor for increased peripheral vision. Integrated sunshield for reduced glare. Adjustable sunshield lowers or raises at the touch of a button. Breath deflector system. Exhaust vent for control breathing airflow. Double D ring chin strap. Electric visor included. Spacious design allows room for eyeglasses. D.O.T. approved. Shell: Polycarbonate Composite.

VISION 180°

Black (90)

Gray (09)

Red (30)

VISION 180° ELECTRIC SE FULL FACE HELMET

XS, S, M, L, XL, 2XL, 3XL | 447461 | **$239.99**

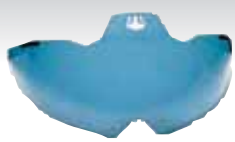

Smoke (57)

VISION 180° ANTI-FOG SUN VISOR

One size | 447776 | **$59.99**

White (01)

VISION 180° ABSORBENT MASK

Pack of 10.

One size | 447473 | **$7.99**

GOGGLES

TEAR THROUGH WIND, FLYING DEBRIS, INSECTS AND BLINDING SUNLIGHT WITHOUT BATTING AN EYE WHENEVER YOU STRAP ON THESE GOGGLES OFFERING MAXIMUM VISIBILITY, PROTECTION AND COOL.

Shop at
store.can-am.brp.com
or at your authorized Can-Am dealer.

ADVENTURE GOGGLES >

Large, flexible, assembled urethane frame with integrated vents for strength, flexibility and comfort-flow ventilation. Oversized, hypoallergenic triple-density face foam for comfort, shock/sweat absorption and reduced skin chafing. Include 2 scratch-resistant lenses: 1 mirrored lens for varied light conditions and 1 clear lens for long-lasting clear vision in the toughest conditions. Premium silicone-backed strap system for slip-free performance. Hinged strap for better fit on any facial geometry. Include clip-on nose guard shield for increased protection.

White (01)

Silver (08)

ADVENTURE GOGGLES
One size | 447573 | **$84.99**

White (01)

Silver (08)

QUICK-STRAP ADVENTURE GOGGLES
One size | 447679 | **$94.99**

KEY FEATURE

Include clip-on nose-guard shield for increased protection.

Clear (00)

ADVENTURE SINGLE LENS TEAR-OFFS KIT
Rip away the dirt from your field of vision instantly with this tear-off-ready replacement lens kit. Includes 1 tear-off-ready replacement single lens. Also includes 5 clear tear-off tabs ready to be used. Fits the Adventure goggle.

One size | 447700 | **$29.99**

Mirror Silver (22)

ADVENTURE GOGGLE MIRRORED REPLACEMENT LENS
Scratch-resistant mirrored lens for good visibility in varied light conditions.

One size | 447602 | **$21.99**

Clear (00)

ADVENTURE GOGGLE REPLACEMENT LENS
Scratch-resistant clear lens for long-lasting clear vision in the toughest conditions.

One size | 447603 | **$17.99**

Amber (95)

ADVENTURE DUAL LENS TEAR-OFF KIT
Rip away the dirt from your field of vision instantly with this tear-off-ready replacement lens kit. Includes 1 tear-off-ready replacement lens. Also includes 5 clear tear-off tabs ready to be used. Fits the Adventure goggle.

One size | 447698 | **$29.99**

Clear (00)

ADVENTURE REPLACEMENT TEAR-OFFS
Ready to be used clear tear-offs tabs. Pack of 10.

One size | 447699 | **$9.99**

ADVENTURE GOGGLE MASK
(Not illustrated)
Clips on goggles for added protection from the elements.

One size | 447574 | Black (90) | **$24.99**

RACE GOGGLES >

Large urethane frame for strength, flexibility and style. Oversized, hypoallergenic dual-density face foam for comfort, shock absorption and reduced skin chafing. Premium silicone-backed strap system for slip-free performance. Hinged strap system for better fit on any facial geometry.

Yellow (10)

Red (30)

Black (90)

BEST SELLER

RACE GOGGLES

Scratch-resistant amber clear lens for long-lasting clear vision.

One size | 447570 | **$49.99**

Yellow (10)

Black (90)

Red (30)

QUICK-STRAP RACE GOGGLES

Fast and clever quick-strap system delivers easy attachment convenience and fits any Cross type helmet. Scratch-resistant clear lens for long-lasting clear vision. Include clip-on nose guard shield for increased protection in extreme riding conditions.

One size | 447572 | **$64.99**

RACE GOGGLE ROLL-OFF SYSTEM

Easy-to-use string-pull system removes dust, mud or rain from film as you ride to produce clean and clear view.

One size | 447611 | Clear (00) | **$37.99**

Clear (00)

RACE GOGGLE REPLACEMENT LENS

Scratch-resistant clear lens for long-lasting clear vision in the toughest conditions.

One size | 447601 | **$17.99**

Clear (00)

ROLL-OFF SYSTEM REPLACEMENT CARTRIDGE KIT

One size | 447612 | **$13.99**

RACE GOGGLE MASK

(Not illustrated)
Clips on goggles for added protection from the elements.

One size | 447571 | Black (90) | **$19.99**

TRAIL GOGGLES >

Large urethane frame for strength, flexibility and style. Hypoallergenic face foam. Scratch-resistant clear lens for good visibility in all conditions. Silicone-backed strap system for slip-free performance.

White (01)

Yellow (10)

Black (90)

TRAIL GOGGLES

One size | 447567 | **$34.99**

TRAIL GOGGLE REPLACEMENT LENS

(Not illustrated) Scratch and fog resistant clear lens.

One size | 447569 | Clear (00) | **$17.99**

Black (90)

CAN-AM HELMET CASE

Easy-to-carry ergonomic handle. Outer pocket for helmet accessory. Can-Am branded. Helmet not included. Content: 100% Polyester.

One size | 447678 | **$29.99**

Black (90)

FULL FACE & MODULAR HELMET CASE

Water-resistant shell biofoam construction. Self-healing nylon zippers. Quick access spare faceshield storage. External legs for vertical storage. Interior scratch-proof inner surface. Ergonomic soft touch rubber carrying handle.

One size | 447641 | **$44.99**

Black (90)

BV2S & CROSS HELMET CASE

Water-resistant construction. Self-healing nylon zippers. Quick-access spare faceshield storage. External legs for vertical storage. Interior scratch-proof surface. Ergonomic soft touch rubber carrying handle.

One size | 447642 | **$44.99**

Black (90)

PRO GEAR BAG

Designed and built for consummate riding. Protective helmet compartment, watertight drained boot compartment, dry-mat and cavernous center compartment, tool compartment. Inline wheels and pull-handle for maximum portability. 191 liters capacity (6.75 cu.ft.).

One size | 286214 | **$164.99**

Black (90)

WEEKENDER DUFFLE BAG

Specially designed for day trips or extended outings. 52 liters capacity (1.84 cu.ft.) 22" x 12" x 11" (57 cm x 30 cm x 28 cm).

One size | 286213 | **$38.99**

TECHNICAL TERMINOLOGY

WE KEEP YOU DRY

Respiractive Performance Matrix or RPM coating exclusive to BRP Riding Gear. Delivers extremely high performance and durability for perfect climate control under even the most extreme conditions. Trademark waterproofness, windproofness and breathability required of BRP Riding Gear shell fabric developed for intensive use and demanding riders.

Same great RPM coating PLUS total seam and logo sealing. Also, added direct venting in strategic jacket areas for more efficient moisture management during intense activity.

TEFLON†

Teflon provides an invisible barrier around fabric fibers to repel water and stains. In addition to retaining its water shedding properties longer than standard Teflon, Teflon HT and HP are also even more resistant to soiling and staining without altering the fabric's color, appearance, structure, texture and breathability. Teflon HT, good up to 20 washes and Teflon HP up to 30 washes compared to manufactured coatings washable only 1 to 5 times.

HIPORA†

Windproof, breathable and waterproof membrane that features unique polyurethane coating technology and delivers excellent moisture management.

DWR†

DWR stands for Durable Water Repellency. This treatment helps prevent the outer fabric surface from absorbing water, keeping the outerwear both light and comfortable.

SEAM SEALING

Seams and embroidery can act as tiny entry points through which wind and water can infiltrate. That's why jackets and pants with RPM are critical seam and logo sealed. And Riding Gear with RPM Max are 100% seam and logo sealed for an even more comprehensive barrier from all the elements. The proprietary tape is also waterproof and breathable to fully seal the deal for complete performance.

WE KEEP YOU WARM

CRESTA

CRESTA BY PRIMALOFT

Primaloft Cresta offers warmth without weight and extra bulk. It is designed to keep you warm and comfortable throughout the day.

PRIMALOFT ONE

Warmer wet or dry than any other synthetic insulation. The ultimate down-like microfiber insulation. Quick drying, soft and breathable. Primaloft One is lightweight, compressible and thermally efficient.

SIZING CHART

RIDING GEAR

HOW TO MEASURE

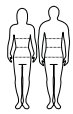

For best results, have someone else take measurements. Measure body in underwear. Tape must be snug but not tight. If measurements fall between two sizes, order the larger size.

Chest/Bust
Measure under your arms, around the fullest part of your chest.

Waist
Measure around your natural waistline, keeping one finger between the tape and body.

Gloves
Measure palm width.

Inseam
Without shoes, from crotch to the floor.

Arm length
Hand on hip, from center back neck bone, along shoulder point around elbow to bottom of wrist bone.

Head
Around your head, from the center of the forehead, above the ears and over the natural bump at the back of the head.

MEN'S **JACKETS, PANTS & SPORTSWEAR**	S	M	MT	L	LT	XL	XLT	2XL	3XL
CHEST	36 - 38	39 - 41	39 - 41	42 - 44	42 - 44	46 - 48	46 - 48	50 - 52	54 - 56
WAIST	30 - 32	33 - 35	33 - 35	36 - 39	36 - 39	41 - 43	41 - 43	45 - 48	50 - 52
HIPS	35 - 37	38 - 40	38 - 40	41 - 43	41 - 43	45 - 47	45 - 47	49 - 51	53 - 55
ARM LENGTH	33	33	34 1/2	34	35 1/2	34	35 1/2	35	35
INSEAM	32	32	34	32	34	33	35	33	33

MEN'S **PANTS**	28	30	32	34	36	38	40	42	44
WAIST	28 - 30	30 - 32	32 - 34	34 - 36	36 - 38	38 - 40	40 - 42	42 - 44	44 - 46
HIPS (SEAT)	33 - 35	35 - 37	37 - 39	39 - 41	41 - 43	43 - 45	45 - 47	46 - 48	48 - 50
INSEAM	32	32	32	32	32	32	33	33	33

LADIES' **JACKETS, PANTS & SPORTSWEAR**	XS	S	M	L	XL	2XL	3XL
CHEST	32 1/2 - 33 1/2	34 1/2 - 35 1/2	36 1/2 - 38	39 1/2 - 41	43 - 45 1/2	47 - 49 1/2	51 - 53
WAIST	24 1/2 - 25 1/2	26 1/2 - 27 1/2	28 1/2 - 30	31 1/2 - 33	35 - 37	39 - 41	43 - 45
HIPS	34 1/2 - 35 1/2	36 1/2 - 37 1/2	38 1/2 - 40	41 1/2 - 43	45 - 47	49 - 51	53 - 55
ARM LENGTH	29	30	31	32	32	32	32
INSEAM	29	29	30	30	30	30	30

LADIES' **PANTS**	3/4	5/6	7/8	9/10	11/12	13/14
WAIST	24 - 26	26 - 28	28 - 30	30 - 32	32 - 34	34 - 36
HIPS (SEAT)	34 - 36	36 - 38	38 - 40	40 - 42	42 - 44	44 - 46
INSEAM	29	29	30	30	30	30

MEN'S **GLOVES** (measure palm width)	S	M	L	XL	2XL	3XL
INCHES	3	3 3/8	3 3/4	4 1/8	4 1/2	5 1/2

LADIES' **GLOVES** (measure palm width)	S	M	L	XL	2XL
INCHES	2 5/8	3	3 1/4	3 1/2	4 1/2

TEEN **GLOVES**	6-8	10-12	14-16
INCHES	3 1/8	3 3/8	3 5/8

SOCKS	S/M	L/XL
	6 - 9	10 - 13

JUNIOR **HELMETS**	S	M	L
HAT SIZE	6 1/8 - 6 1/4	6 3/8 - 6 1/2	6 5/8 - 6 3/4
HEAD (INCHES)	19 3/8 - 19 3/4	20 1/8 - 20 1/2	20 7/8 - 21 1/4

HELMETS	XS	S	S/M	M	M/L	L	XL	2XL	3XL
HAT SIZE	6 5/8 - 6 3/4	6 7/8 - 7	7 1/8	7 1/8 - 7 1/4	7 1/4	7 3/8 - 7 1/2	7 5/8 - 7 3/4	7 7/8 - 8	8 1/8 - 8 1/4
HEAD (INCHES)	20 7/8 - 21 1/4	21 5/8 - 22	22 3/8	22 3/8 - 22 3/4	22 3/4	23 1/8 - 23 5/8	24 - 24 3/8	24 3/4 - 25 1/8	25 1/2 - 25 7/8

KIDS/TEEN	2	3/4	5/6	7/8	10/12	14/16
CHEST	21	22 - 23	24 - 25	26 - 27	28 1/2 - 30	31 1/2 - 33
WAIST	20	20 1/2 - 21	21 1/2 - 22	22 1/2 - 23	24 - 25	26 - 27
HIP (SEAT)	21	22 - 23	24 - 25	26 - 27	28 1/2 - 30	31 1/2 - 33
ARM LENGTH	15 1/2	17 - 18 1/2	20 - 21 1/2	23 - 24 1/2	28 1/2 - 30	31 1/2 - 33
INSEAM	13 1/2	15 1/2 - 17 1/2	19 1/2 - 21	22 3/4 - 24 1/2	26 1/4 - 28	29 1/2 - 31

WHAT CODE REPRESENTS YOUR SIZE?

1. Find your size.
2. The corresponding code is THE CODE you use to complete the part number on your order.
   Example: **440227__90** Size: **M** = code "**06**", therefore **440227<u>06</u>90**

SIZE	One Size	XS	S	M	MT	L	LT	XL	XLT	2XL	3XL	4XL	5XL
CODE	**00**	**02**	**04**	**06**	**07**	**09**	**10**	**12**	**13**	**14**	**16**	**18**	**88**

SIZE	S/M	M/L	L/XL	2	3/4	5/6	6/8	7/8	9/10	10/12	11/12	13/14	14/16
CODE	**72**	**91**	**73**	**21**	**79**	**52**	**48**	**54**	**55**	**49**	**56**	**80**	**50**

SIZE	8	9	10	11	12	13	28	30	32	34	36	38	40	42	44
CODE	**28**	**29**	**30**	**31**	**32**	**33**	**36**	**37**	**38**	**39**	**40**	**41**	**42**	**43**	**44**

OUTLANDER

ATV ACCESSORIES

WATCH

Videos of the ATV accessories can be viewed online at **store.can-am.brp.com/video**.

OUTLANDER

50 UNDERBELLY PROTECTION
51 BUMPERS
52 TRUNK BOXES
54 RACK EXTENSIONS & BAGS
56 WINDSHIELDS
58 ELECTRICAL ACCESSORIES
59 HANDLEBARS & MIRRORS
60 SHOCK & SHOCK PROTECTORS
60 MUD ACCESSORIES & FILTERS
62 HITCHES & COVERS
63 HUNTING ACCESSORIES
80 WINTER ACCESSORIES
106 TIRES & RIMS

Shop at
store.can-am.brp.com
or at your authorized Can-Am dealer.

FRONT & REAR LINQ RACK EXTENSIONS
These strong, durable rack extensions install easily on the Outlander and Outlander MAX thanks to the LinQ System, requiring no tools. It helps keep your cargo more securely in place.

LINQ 32 GAL (124L) TRUNK BOX FOR MAX
Specifically designed for the Outlander MAX. Extra large, innovative LinQ System mount, with passenger comfort pads and rear tail light. Weather-resistant lid gaskets seal out dust and moisture. Key locking latch. Color panels available to match your vehicle.

FRONT & REAR BUMPERS
Provide additional protection against the elements. Tough and durable, they can be added on the base vehicle to give your Outlander the look of an XT model.

PASSENGER HEATED HAND GRIPS AND WIND DEFLECTORS
Passenger handles with dual temperature and visor outlet, plus wind deflectors for greater comfort while riding.

UNDERBELLY PROTECTION
Aluminum plates made with high strength 5052 H32 aluminum and plastic deflector to protect your frame from the unexpected. A must-have for rugged terrains.

EXTRA HIGH WINDSHIELD
For wind protection and winter applications.

DELUXE FAIRING
The Deluxe Fairing provides not only wind protection, but a series of innovative features:

- Quick tool-less removal once the base brackets are mounted on the handlebar
- 2 cup holders
- Optional GPS mounting kit
- Optional windshield can be added on
- Optional mirrors
- Optional auxiliary windshield lighting

NEW
REDUCED PRICES
ON SKID PLATES

ALUMINUM PLATES MADE WITH HIGH STRENGTH 5052 H32 ALUMINUM AND PLASTIC DEFLECTOR TO PROTECT YOUR FRAME FROM THE UNEXPECTED.
A MUST-HAVE FOR RUGGED TERRAINS.

A-ARM PROTECTORS

Add more protection to the CV joints and rubber boots. 1/8" (3 mm) thick lightweight and durable design. Drain hole to release water, mud and debris. Easy to install. Replaces stock plastic protectors. Sold in pairs.

Embossed Can-Am logo
Outlander 2012 with 800R or 1000 engine
Outlander & Outlander MAX 2013 (except with 400 engine) | 715001716 | **$119.99**

Engraved Outlander name
Outlander 2006-2012 (except 400 & 2012 with 800R or 1000 engine)
Outlander MAX 2012 and prior (except with 400 engine) | 703500524 | **$129.99**

FRONT ALUMINUM SKID PLATE

Protection for the front portion of the frame. 3/16" (4.5 mm) thick and die-formed for strength and durability. Use in conjunction with the central chassis skid plate for full frame protection.

Outlander 2012 with 800R or 1000 engine
Outlander & Outlander MAX 2013 (except with 400 engine) | 715000926 | **$89.99**

Stamped Aluminum
Outlander 2006-2012 (except 400 & 2012 with 800R or 1000 engine)
Outlander MAX 2012 and prior (except with 400 engine) | 715000548 | **$104.99**

BEST SELLER

CENTRAL CHASSIS SKID PLATE

3/16" (4.5 mm) thick and die-formed. Engraved Can-Am logo.

Outlander 2012 with 800R or 1000 engine
Outlander & Outlander MAX 2013 (except with 400 engine) | 715000923 | **$109.99**

Stamped 1/8" (3 mm) aluminum construction. Recessed bolt holes. Cannot be installed with Plow Mounting Kit. Engraved Can-Am logo.

Outlander 2006-2012 (except with 400 engine & 2012 with 800R or 1000 engine)
Outlander MAX 2012 and prior (except with 400 engine) | 715000636 | **$89.99**

FOOTWELL PROTECTOR PLATES

Bump up the impact protection to the footwells. 1/8" (3 mm) thick lightweight and durable design. Use in conjunction with the central chassis skid plate. Sold in pairs.

Outlander 2012 with 800R or 1000 engine
Outlander & Outlander MAX 2013 (except with 400 engine) | 715000922 | **$134.99**
Outlander 2006-2012 (except 400 & 2012 with 800R or 1000 engine)
Outlander MAX 2012 and prior (except with 400 engine) | 715000547 | **$154.99**

TRAILING ARM PROTECTORS

1/8" (3 mm) thick lightweight and durable design. Replaces stock plastic protectors. Sold in pairs. Engraved Can-Am logo.

Outlander 2012 with 800R or 1000 engine
Outlander & Outlander MAX 2013 (except with 400 engine) | 715001129 | **$109.99**
Outlander 2006-2012 (except with 400 engine & 2012 with 800R or 1000 engine)
Outlander MAX 2012 and prior (except with 400 engine) | 715000311 | **$129.99**

REAR DIFFERENTIAL PROTECTOR

1/8" (3 mm) thick lightweight and durable design. Replaces stock plastic protector.

Outlander 2012 with 800R or 1000 engine
Outlander & Outlander MAX 2013 (except with 400 engine) | 715000920 | **$64.99**
Outlander 2006-2012 (except 400 & 2012 with 800R or 1000 engine)
Outlander MAX 2012 and prior (except with 400 engine) | 715000285 | **$119.99**

REAR SKID PLATE

3/16" (4.5 mm) thick and die-formed for strength and durability. Must be installed with the central and front skid plates.

Outlander 2012 with 800R or 1000 engine
Outlander 2013 (except with 400 engine) | 715000918 | **$69.99**
Outlander MAX 2013 (except with 400 engine) | 715000919 | **$99.99**

1/8" (3 mm) thick and die-formed for strength and durability. Must be installed with the central and front skid plate.

Outlander 2012 and prior (except with 400 engine & 2012 with 800R or 1000 engine) | 715000609 | **$54.99**
Outlander MAX 2012 and prior (except with 400 engine) | 715000610 | **$69.99**
Outlander MAX with 400 engine only | 703500381 | **$74.99**
Outlander with 400 engine only | 703500382 | **$59.99**

BEST SELLER

XT FRONT BUMPER KIT

Provides additional protection against the elements. Tough and durable, can be added on base Outlander model to convert vehicle into XT model. Large tube construction with textured black finish. Standard on XT model.

Outlander 2009 800R, 2010-2012 (except 2012 with 800R or 1000 engine)
Outlander MAX 2010-2012 | 715000670 | Black | **$189.99**
Outlander 2006-2009 (except 800R) | 703500551 | **$159.99**
Outlander 2004-2005 | 703500348 | Black | **$174.99**
Outlander 2012 with 800R or 1000 engine
Outlander & Outlander MAX 2013 | 715000947 | **$159.99**

EXTREME FRONT BUMPER

Ultra sturdy for extra vehicle front protection. Fits with Apache 360 Track System when removing the side panels.

Outlander 2012 with 800R or 1000 engine
Outlander & Outlander MAX 2013 | 715001286 | Black | **$229.99**

LOWER BUMPER EXTENSION

(Not illustrated)
Adds protection to lower front plastic fascia. Easy to install. No drilling required. Removable for track kit installation. Must be installed with XT Front Bumper Kit (715000670).

Outlander 2009 800R, 2010-2012 (except 2012 with 800R or 1000 engine)
Outlander MAX 2010-2012 | 715000635 | Black | **$79.99**

BEST SELLER

XT REAR BUMPER KIT

Provides additional protection against the elements. Tough and durable, can be added on base Outlander model to convert vehicle into XT model. Large tube construction with textured black finish. Standard on XT model.

Outlander 2009 800R, 2010-2012 (except 2012 with 800R or 1000 engine)
Outlander MAX 2010-2012 | 715000671 | Black | **$144.99**
Outlander 2006-2009 (except 800R) | 703500550 | Black | **$154.99**
Outlander 2004-2005 | 703500349 | Black | **$159.99**
Outlander 2012 with 800R or 1000 engine
Outlander & Outlander MAX 2013 | 715000948 | Black | **$149.99**

CENTRAL AND FRONT SKID PLATE

Two-piece 3/16" (4.5 mm) aluminum full-body skid plate designed to protect frame and engine case from rough terrain conditions.

Outlander 400 only | 703500570 | **$104.99**

32 GAL (124L) TRUNK BOXES
FOR OUTLANDER & OUTLANDER MAX

OUTLANDER & OUTLANDER MAX

- **Seamless vehicle integration**
  Built from the design stage to specifically match your Can-Am Outlander or Outlander MAX. Totally cohesive design eliminates the need to modify your vehicle in any way.*
- **Easy quick-attach installation**
  Equipped with the LinQ System, the rear trunk box plugs in and out in seconds. Instantly transforms your vehicle to suit the need of the moment.
- **Unparalleled storage**
  32 gal (124L) load capacity with contiguous unobstructed space to maximize storage room and access to the trunk's interior.
- **Built tough**
  Made of injection-molded polyethylene. Double walled in critical areas.
- **Dust & weather proof**
  The fully sealed lid protects your belongings from dust, moisture and the elements.

OUTLANDER MAX

- **Ergonomic design**
  Passenger comfort is ensured on active rides as well as longer recreational rides thanks to the ergonomically designed passenger padding, comfort-fitted with a portion made of closed cell foam that won't absorb water.
- **Easy-access**
  Very easy to embark even when the driver is seated.
- **Passenger handgrips**
  Three holding positions enable passengers to adjust to the type of ride and type of comfort they desire. Heated handgrips available as an option, featuring 3 heated zones and dual temperature for ultimate comfort.

BUILD YOUR LINQ 32 GAL (124L) TRUNK BOX

1 CHOOSE YOUR TRUNK BOX

OUTLANDER

BEST SELLER

LINQ 32 GAL (124L) TRUNK BOX FOR OUTLANDER

Outlander 2012 with 800R or 1000 engine

Outlander 2013 (except with 400 engine)

For other Outlander models, the LinQ retrofit adaptor plate is required (715001334).

Rear tail light included
715000931 | **$339.99**

No rear tail light
715001396 | **$309.99**

ERGONOMIC DESIGN

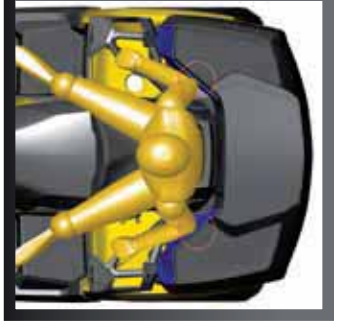

OUTLANDER MAX

NEW

LINQ 32 GAL (124L) TRUNK BOX FOR OUTLANDER MAX

Outlander MAX 2013 (except with 400 engine)

Rear tail light included
715001682 | **$419.99**

No rear tail light
715001685 | **$389.99**

⚠ WARNING * You should never accessorize your Can-Am Off-road vehicle with accessories not approved by BRP because your vehicle may no longer meet certain safety and construction standards. This situation could increase the risk of severe injury or death and render your vehicle not legal for use.

2 CHOOSE COLOR PANELS TO MATCH YOUR VEHICLE

TRUNK BOX PANEL KIT

715001395 | Red
715001392 | Yellow
715001391 | Black
Fits LinQ 32 gal (124L) Trunk Boxes for Outlander & Outlander MAX | $29.99

+ ADD THE NEXT G-1 VISTA CAMO DECALS ON BLACK PANELS TO MATCH YOUR CAMO VEHICLE

NEW

CAMO DECALS FOR BLACK TRUNK BOX PANEL KIT

Fits Black Trunk Box Panel Kit | 715001683 | Camo | **$44.99**

3 ORDER A PLATE (IF REQUIRED)

LINQ RETROFIT ADAPTOR PLATE

Kit especially designed to allow the use of the LinQ 32 gal (124 L) Trunk Boxes (715000931, 715001396) on older Outlander models. Comes with specific harness for the Trunk Box Light.

Outlander 2006-2012 (except with 800R & 1000 engine)
Outlander 2013 with 400 engine | 715001334 | **$44.99**

LinQ SYSTEM™

ACCESSORIZING **ACCELERATED**

- INSTALL AND REMOVE ACCESSORIES IN SECONDS AND TRANSFORM YOUR VEHICLE TO SUIT THE NEED OF THE MOMENT
- TOOL-LESS SYSTEM ALLOWS YOU TO LITERALLY PLUG IN AND OUT OF SITUATIONS AS THEY ARISE
- TRUE SECURE MOUNTING AND ANTI-THEFT PROTECTION LOCKS IN PEACE OF MIND
- TRUNK BOXES, RACK EXTENSIONS MODULAR BAGS AND GEAR GRIPS ATTACH QUICKLY FOR EXPEDITIONS
- AND DETACH INSTANTLY FOR FREERIDING

The LinQ System full-lock mounting system for Can-Am ATV accessories will transform the way you use your ATV

AND IT'S EXCLUSIVE TO BRP

LINQ (REPLACEMENT PART)

Unique mounting fastener usable on any LinQ system accessory. Tool-less installation and removal. Sold in pairs.

Outlander 2012 with 800R or 1000 engine Outlander & Outlander MAX 2013 (except with 400 engine) | 715000945 | **$19.99**

BEST SELLER

LinQ SYSTEM™

FRONT & REAR LINQ RACK EXTENSIONS

Strong and durable. Easy and tool-less installation thanks to the LinQ System. Helps keep cargo securely in place. Mounts in seconds.

4" (10 cm)
Outlander & Outlander MAX 2013 (except with 400 engine)
Outlander 2012 with 800R or 1000 engine |
715000944 | Silver | **$169.99**
715001665 | Black | **$169.99**

6" (15 cm)
Outlander & Outlander MAX 2013 (except with 400 engine)
Outlander 2012 with 800R or 1000 engine |
715001187 | Silver | **$179.99**
715001671 | Black | **$179.99**

FRONT RACK EXTENSIONS

Offers 4" (10 cm) or 7" (18 cm) of clearance with the existing racks. Secures bulky loads with its sturdy tube construction. Textured black finish. Medium profile 4" (10 cm).

Outlander 2006-2012 (except 2012 with 800R or 1000 engine)
Outlander MAX 2012 and prior

Front
Medium profile 4" (10 cm)
703500536 | **$99.99**
High profile 7" (18 cm)
703500535 | **$114.99**

Rear
Medium Profile 4" (10 cm)
703500538 | **$99.99**
High Profile 7" (18 cm)
703500537 | **$114.99**

NONSKID LUGGAGE RACK STRIPS

Rubber strips you can apply to your front and rear luggage racks to maintain your cargo in position. Helps keep your luggage rack scratch free. Easy to install. Sold in pack of 4.

Outlander 2006-2012 (except 800R or 1000 engine)
Outlander MAX 2012 and prior | 703500569 | Black | **$36.99**

KEY FEATURES

These LinQ System durable spacious and weather proof modular bags can be installed and removed in a snap with no tools.

LinQ SYSTEM™

BEST SELLER

LINQ DELUXE MODULAR BAGS

Tool-less installation and removal. Versatile, rugged, spacious and attractive. Ideal for carrying anything you need in any conditions. Weatherproof, scratch-resistant, with molded rubber bottom. Central compartment can be used alone, on the rack, with LinQ System. Removable bin. Front LinQ Deluxe Modular Bag will not obstruct light beam on Outlander Deluxe Fairing.

Outlander & Outlander MAX 2013 (except with 400 engine)
Outlander 2012 with 800R or 1000 engine

Front 44L Bag
715001695 |
$244.99

Rear 73L Bag
715001694 |
$274.99

REAR COMPARTMENT STORAGE 10L BAG

Roll top dry bag for protecting your cargo fully from the elements. Fits in innovative rear compartment of your Outlander.

Outlander 2012 with 800R or 1000 engine
Outlander & Outlander MAX 2013 (except with 400 engine) | 708300460 | **$29.99**

REAR TRUNK BOX

Perfect fit with vehicle. Made of impact resistant polyethylene. Fully sealed lid. Tray quick-hooks to box. Equipped with lid key lock. The molded handle makes lifting and moving the box easy. Robust double wall lid. Improved trunk latch and attachment system on rack. Easy-install quick attach/detach system (715000273) available as an option. Fits any ATV on the market. Cannot be used with Rear Rack Extensions (703500537 & 703500538).

Outlander 2013 and prior
Outlander MAX 2012 and prior | 715001842 | Black | **$279.99**

QUICK ATTACH/ DETACH SYSTEM FOR REAR TRUNK BOX

(Not illustrated)
Fits with Rear Trunk Box (715000626).

Outlander 2006-2012 (except 2012 with 800R or 1000 engine)
Outlander MAX 2012 and prior | 715000273 | **$79.99**

FRONT BAG

100% water-repellent polyester construction. Designed to fit with or without a rack extension. Integrated map holder. Waterproof zippers.

Outlander 2004-2005 | 295100276 | Black | **$114.99**
Outlander 2006-2012 (except 2012 with 800R or 1000 engine)
Outlander MAX 2006-2012 | 715000235 | Black | **$119.99**

REAR BAG

100% water-repellent polyester construction. Designed to fit with or without a rack extension. Waterproof zippers.

Outlander 2004-2005 | 295100277 | Black | **$114.99**
Outlander 2006-2012 (except 2012 with 800R or 1000 engine)
Outlander MAX 2006-2012 | 715000234 | Black | **$119.99**

PREMIUM MODULAR BAG

Multi-configuration 4-section bag. Constructed of 600-denier, solution-dyed, water-repellent polyester. Semi-rigid thermoformed structure. Heavy-duty water-resistant zipper. Easily converts into a duffle bag.

Outlander 2006-2012 (except 2012 with 800R or 1000 engine)
Outlander MAX 2006-2012 | 280000296 | Black | **$179.99**

REAR CARGO BOX

Convert your Outlander MAX into a versatile vehicle in only 30 seconds. Designed exclusively for the Outlander MAX, this latest-generation rear cargo box is built tough and made of high-resistance polyethylene plastic. Featuring a removable rear tailgate that also conveniently installs in the center of the box. Since it can handle a maximum payload of 260 lbs (118 kg), you'll really hit paydirt with this cargo box. Dimensions: 35" (88 cm) W X 21" (54 cm) D X 7" (17 cm) H.

Outlander MAX 2006-2012 | 715000734 | Black | **$539.99**

ULTRA HIGH WINDSHIELD KIT

Provides superior wind protection. 4" (10 cm) higher windshield. Added substructure to control vibration. Can-Am branded and color matched. Can be used on standard, XT and Limited models. Easy to install and remove.

Outlander 2006-2012 (except with 400 engine & 2012 with 800R or 1000 engine)
Outlander MAX 2012 and prior (except with 400 engine)
715001018 | Yellow
715001019 | Red
715001020 | Tinted Black
$219.99

HIGH WINDSHIELD KIT

These Windshield Kits provide excellent wind protection. Can be used on standard, XT and Limited models. Easy to install and remove.

Outlander 2006-2012 (except with 400 engine & 2012 with 800R or 1000 engine)
Outlander MAX 2012 and prior (except with 400 engine)
715001015 | Yellow
715001016 | Red
715001017 | Tinted Black
$189.99

WINDSHIELD KIT

Can be used with or without handlebar protectors. Includes steering cover. Easy to install and remove.

Outlander with 400 engine 2013 and prior | 703500444 | **$159.99**

GPS MOUNT

For mounting a Garmin† Nuvi GPS. Kit includes wiring harness and protective cover.

Fits Deluxe Fairing | 715000962 | **$89.99**

GPS PROTECTOR

(Not illustrated)
Provides extra protection from mud and dust. Covers GPS support when GPS is removed. For Garmin Nuvi GPS.

Outlander Limited 2010-2012 | 710002425 | Black | **$19.99**

GPS ADAPTOR FOR OUTLANDER LIMITED WINDSHIELD

Kit needed to install your GPS from Limited model when using a Can-Am windshield.

Outlander Limited 2010-2012 | 715000961
Outlander 2009 and prior | 715000309
$26.99

CUSTOMIZING YOUR DELUXE FAIRING IN 3 EASY STEPS

1 CHOOSE YOUR DELUXE FAIRING'S COLOR

BEST SELLER

DELUXE FAIRING

Innovative, richly-featured wind protection. Quick tool-less removal once base brackets are mounted on handlebar. 2 cup holders. GPS-mounting-kit-ready. Optional mirrors & auxiliary lighting.

Outlander 2006-2013 (except with 400 engine & models with 1 1/8" tapered handlebar)
715000935 | Yellow
715001231 | Red
715001232 | Black
$174.99

NEW

CAMO DECALS FOR BLACK DELUXE FAIRING

Next G-1 Vista Camo pattern perfectly matches your Camo vehicle. Easy and quick installation. For use with Black Deluxe Fairing (715001232).

Fits Black Deluxe Fairing | 715001684 | Camo | **$44.99**

2 BUY A DELUXE WINDSHIELD

NEW 6" (15 cm)

LOW WINDSHIELD

This low windshield allows you to keep your unit looking sporty while giving you some protection against the elements and the possibility of enjoying directional lighting. Tool-less installation and replacement. Fits Deluxe Fairing (all colors).

Fits Deluxe Fairing | 715001227 | **$54.99**

11" (28 cm)

HIGH WINDSHIELD

For wind protection and winter applications. Tool-less installation and replacement. Fits Deluxe Fairing (all colors).

Fits Deluxe Fairing | 715001211 | **$64.99**

NEW 16" (41 cm)

EXTRA HIGH WINDSHIELD

This extra high windshield is the ultimate for protection against the elements while touring. For wind protection and winter applications. Tool-less installation and replacement. Fits Deluxe Fairing (all colors).

Fits Deluxe Fairing | 715000936 | **$89.99**

3 YOU MAY ALSO WANT AS AN OPTION...

AUXILIARY WINDSHIELD LIGHTING

Two premium LED spots for Deluxe Fairing for both increased output and directional lighting.

Outlander 2012 with 800R or 1000 engine Outlander & Outlander MAX 2013 (except with 400 engine) | 715001214 | **$299.99**

DELUXE MIRROR KIT

Wide rear view. Perfect fit with your Deluxe Fairing & Deluxe Windshield.

Fits Deluxe Fairing | 715001384 | **$59.99**

BEST SELLER

HEATED HAND GRIPS & THROTTLE COMBO

New ergonomically-designed control module. Four different temperature settings with individual controls for your thumb and your grips. LED dimmer facilitates reading temperature settings. Returns to previous heat setting. One touch shutdown. Can-Am logo.

Outlander 2012 with 800R or 1000 engine
Outlander & Outlander MAX 2013 (except with 400 engine)
Renegade 2012 with 800R or 1000 engine
Renegade 2013 | 715001849 | **$169.99**

NEW

PASSENGER HEATED GRIPS & VISOR OUTLET

Replaces your stock passenger handles with dual temperature three-zone heated handles and grips. A heated visor outlet is integrated onto the control switch housing for added passenger comfort.

Outlander MAX 2013 (except with 400 engine) | 715000943 | **$199.99**

PASSENGER HEATED GRIPS

Heat control can be set to high or low. Ideal for replacing stock passenger handles. Added passenger comfort. Easily removable when summer comes. Easy to install.

Outlander MAX 2006-2012 | 715000634 | **$169.99**

NEW

PASSENGER WIND DEFLECTORS

These wind deflectors fit on the passenger handles and provide greater comfort while riding. Easy to install and remove.

Outlander MAX 2013 (except with 400 engine) | 715001669 | **$74.99**

PASSENGER WIND DEFLECTORS

These wind deflectors fit snugly around the passenger handles and provide total comfort while riding. Easy to install and remove.

Outlander MAX 2004-2005 | 715000231 | **$59.99**
Outlander MAX 2006-2012 | 715000233 | **$59.99**

FLASHER AND HORN KIT

Complete flasher and horn kit. Integrates to vehicle. Easy to install. Not for road use.

Outlander 2009-2012 (except 2012 with 800R or 1000 engine)
Outlander MAX 2009-2012 | 715000695 | **$264.99**

HEATED VISOR OUTLET

Strategically positioned on vehicle to help you maintain your agility.

Outlander 2012 with 800R or 1000 engine
Outlander and Outlander MAX 2013 (except with 400 engine) | 715001246 | **$44.99**

HEATED HAND GRIP KIT

Keep your hands warm while riding with this easy-to-install hand grip kit. Includes a 3-position switch, switch cover, wiring harness, hand grip and handlebar end cap. Grips are 4 7/8" (12 cm) long with an interior diameter of 7/8" (22 mm). Grip heat control can be set to high (20 watts) or low (10 watts).

Outlander 2012 and prior (except 2012 with 800R or 1000 engine) | 715000322 | **$79.99**

HEATED THROTTLE LEVER ASSEMBLY

Improved heating element provides faster warm-up time and increased maximum temperature. For a perfect fit and finish, designed especially for your Can-Am ATV. Kit includes a 3-position switch, switch cover, wiring harness and throttle lever assembly.

Outlander 2012 and prior (except 2012 with 800R or 1000 engine) | 715000584 | **$59.99**

SHIFTER LOCK

Locking device locks transmission shifter in "Park" position. Minimum 5000-key combination. Fully integrated.

Outlander 2009-2011 (except with 400 engine)
Outlander 2012 with 500 & 650 engine
Outlander MAX 2009-2012 (except with 400 engine) | 715000689 | **$49.99**
Outlander with 400 engine | 715000690 | **$49.99**

XT HANDLEBAR PROTECTOR KIT

Add handlebar protection with our XT-style kit.

Outlander 2004 with 400 engine |
715000272 | Gray | **$104.99**

Outlander 2005-2013 with 400 engine |
715000271 | Black | **$104.99**

Outlander 2006-2013 (except with 400 engine) |
703100251 | Black | **$69.99**

BEST SELLER

HANDLEBAR WIND DEFLECTORS

Rugged injected plastic construction with Can-Am logo. Includes removable cap for air flow adjustment. Mounting kit sold separately.

Outlander (except with 400 engine)
715000733 | Yellow / Black
715000537 | White / Black
715000525 | Black / Yellow
715001706 | Black / Black
$25.99

ALUMINUM TAPERED HANDLEBAR

7/8"- 1 1/8" (22 mm - 28 mm) tapered handlebar made of 6061-T6 aluminum. Includes all hardware, center steering foam and cover.

Outlander 2013 and prior (except with 400 engine) |
715000550 | **$99.99**

MIRROR KIT FOR HANDLEBAR WIND DEFLECTORS

Handlebar wind deflector mount design. To be used with handlebar wind deflectors. Sold in pairs.

Fits on handlebar wind deflectors |
860200080 | **$24.99**

SHORT ALUMINUM MOUNTING KIT

Lightweight black die-cast aluminum construction. Includes complete hardware. Handlebar wind deflectors sold separately.

Outlander (except with 400 engine) |
715001379 | **$49.99**

FULL WRAP ALUMINUM MOUNTING KIT

Lightweight black die-cast aluminum construction. Includes complete hardware. Handlebar wind deflectors sold separately.

Outlander 2013 and prior (except with 400 engine) | 715001378 | **$82.99**

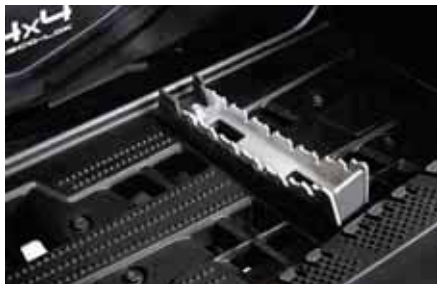

FOOTPEG KIT

Provides maximum integrated grip and more stability during vigorous riding. Kick-up end generates added grip during hard cornering. Made of aluminum. Sold in pairs.

Outlander 2009-2012 (except 2012 with 800R or 1000 engine)
Outlander MAX 2009-2012 | 715000916 | **$39.99**

Outlander 2012 with 800R or 1000 engine
Outlander & Outlander MAX 2013 (except with 400 engine) | 715001131 | **$44.99**

FOOTPEG EXTENSIONS

Made of aluminum. Provide grip in all weather riding conditions. Use in conjunction with footpeg kit (715000916). Sold in pairs.

Outlander 2012 and prior (except 2012 with 800R or 1000 engine)
Outlander MAX 2012 and prior | 715000996 | **$74.99**

FOX SHOCKS

This FOX shock kit has been engineered for the more aggressive riders. Offers increased bump absorption and better roll control. Offers a slightly firmer ride than standard but remains very useable for all around use. Kit includes 4 shocks and springs. Rebuildable. Threaded preload adjusters.

Outlander 2012 with 800R or 1000 engine Outlander & Outlander MAX 2013 (except with 400 engine) | 715001471 | **$569.99**

REAR HPG SHOCK KIT WITH SPRINGS

Outlander 2012 and prior, Standard and XT package (except 2012 with 800R or 1000 engine) | 715000305 | **$269.99**

FRONT HPG SHOCK KIT

High pressure gas (HPG) shocks. Provides enhanced Outlander ride, handling and control. Razor sharp calibration for even the most demanding riders. Fade-free performance. Sold in pairs.

Outlander 2012 and prior (except 2012 with 800R or 1000 engine) | 715000303 | **$219.99**

Outlander 2012 and prior, Standard and XT package (except 2012 with 800R or 1000 engine) | 715000304 | **$264.99**

FRONT SPRING KIT

Front heavy-duty springs. Stiffer than factory installed front springs for more precise front suspension behavior. Ideal for snow plowing or heavy load transportation applications. Sold in pairs.

Outlander 2012 and prior, Standard and XT package (except 2012 with 800R or 1000 engine) | 715000306 | **$74.99**

MUDGUARD KIT

Kit designed to deliver extra protection from dirt and debris, therefore a must if you enjoy riding in the mud. Made of thermoformed plastic parts (except 715001764 - made of injected plastic) that hug your Outlander fenders perfectly. Gives vehicle added flair for that rugged cool look. Includes front and rear extensions and all mounting hardware.

Outlander & Outlander MAX with 400 engine 2006-2013 | 715000297 | Black | **$139.99**

Outlander & Outlander MAX with 400 engine 2004-2005 | 715000296 | Black | **$139.99**

Outlander 2006-2012 (except 400 and 2012 with 800R or 1000 engine)
Outlander MAX 2012 and prior | 715000533 | Black | **$139.99**

Outlander 2012 with 800R or 1000 engine Outlander & Outlander MAX 2013 (except with 400 engine) | 715001764 | Black | **$99.99**

FENDER PROTECTORS

Provide extra fender protection when you're in tight situations. 1" (25 mm) diameter steel construction with textured black finish.

Outlander 2006-2012 (except 2012 with 800R or 1000 engine) | 703500544 | Black | **$124.99**

Outlander MAX 2006-2012 | 703500546 | Black | **$114.99**

SHOCK PROTECTOR

Provides X-package shock rods with additional protection against pitting.

Fit X-package KYB shocks | 715001209 | Black | **$33.99**

FRONT SHOCK COVERS

Feature ventilation holes. Sold in pairs.

Outlander | 715500301 | **$33.99**

OUTLANDER X xc FRONT PRE-RUNNER BUMPER

Lightweight yet sturdy aluminum bumper provides maximum frontal protection. Incorporated front skid plate, reinforced tubing and it still works with a winch.

Outlander 800R 2009, 2010-2011, 2012 MAX, 500, 650 | 715001123 | Aluminum | **$269.49**

X mr TRACTION PLATES

Provide extra foot grip for driver when riding in extreme mud conditions. Help driver to maintain ideal riding position to maximize vehicle traction. Not meant for a passenger.

Outlander MAX 2012 and prior | 715001137 | Aluminum | **$154.99**

NEW

FOAM AIR FILTER BY TWINAIR†

Maximizes performance by increasing air flow throughout RPM range. Maintenance-friendly, i.e. just wash, re-oil and re-use after riding in severely dusty/muddy environments.

Outlander 2012 with 800R or 1000 engine Outlander and Outlander MAX 2013 (except with 400 engine) | 715001333 | **$69.99**

FOAM AIR FILTER BY TWINAIR

Maximizes performance by increasing air flow throughout RPM range. Maintenance-friendly, i.e. just wash, re-oil and re-use after riding in severely dusty/muddy environments.

Outlander 2009-2011 with 800R engine, 2010-2012 with 650 engine Outlander MAX with 650 engine and 2012 with 800R engine | 715001130 | **$69.99**

AIR PREFILTER

Filters out even the tiniest of contaminants in dusty conditions. Extends the service period. Use in conjunction with the stock filter. Air filter not included.

Outlander with 400 engine | 707800293 | **$19.99**

UNI† FOAM FILTER

Ease of maintenance. Can be easily washed, re-oiled and re-used when subject to severe dusty/muddy environments. Contains a rigid adaptor with an added flare providing adequate retention of the air filter.

Outlander with 500, 650, 800R engine | 715000310 | **$31.99**

BEST SELLER

RADIATOR RELOCATOR KIT

Relocates radiator to a top mount position to prevent mud packing. For use in extreme mud conditions, providing maximum performance. Includes all brackets, hardware and hoses (radiator not included).

Outlander with 650, 800R engine 2010-2011 Outlander 2012 with 650 engine Outlander MAX 2010-2012 | 715001178 | Black | **$249.99**

BEST SELLER

SNORKEL KIT

The only way to tackle extreme mud conditions. Snorkel kit comes complete with redesigned air-box with an extended air intake and a new extended CVT exhaust outlet conveniently integrated into the upper gauge pod, maximising mud condition performance. Standard on X mr model.

Outlander 2010-2011 650, 800R Outlander 2012 650 Outlander MAX 2010-2012 | 715001136 | **$259.99**

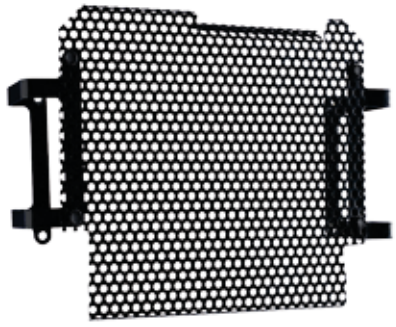

RADIATOR PROTECTOR

Metal shield that mounts over radiator face, providing protection from stones and branches.

Outlander 2006-2012 (except with 800R or 1000 engine) | 703500543 | Black | **$59.99**

Outlander & Rally 2004-2005 | 703500427 | Black | **$59.99**

FRONT HITCH

Front hitch for Outlander with or without a winch. This hitch offers 750 lbs (340 kg) of towing capacity. Allows you to maneuver your trailer easily in tight, confined areas. Needs to be installed with the winch fairlead bracket (715000696) for all Outlanders equipped with a winch.

Outlander 2006-2012 (except 2012 with 800R or 1000 engine)
Outlander MAX 2012 and prior | 703500421 | Black | **$79.99**

Outlander 2012 with 800R or 1000 engine
Outlander & Outlander MAX 2013 (except with 400 engine) | 715000921 | **$79.99**

BEST SELLER

FRONT & REAR HITCH DRAWBAR

Fits 2" receiver hitch that comes standard on Outlanders. Hitch ball not included.

Outlander 2012 with 800R or 1000 engine
Outlander & Outlander MAX 2013 (except with 400 engine) | 715000972 | **$79.99**

REAR RECEIVER HITCH

Powder-coated finish. Does not affect ground clearance. Trailer ball not included. Rear hitch plate (715000286) is required for Outlander X xc 2011. Includes Hitch Drawbar.

Outlander 2012 and prior with hitch plate kit (except 2012 with 800R or 1000 engine) | 715000325 | **$99.99**

REWIND STARTER KIT

Complete manual rewind assembly.

Outlander 400 EFI 2010-2013 | 715001034 | **$159.99**

LOCKABLE GAS TANK CAP

Protects your fuel. Meets latest EPA requirements.

Outlander 2013 and prior | 860200387 | Black | **$39.99**

STORAGE COVER

For storage use only. Fits with or without windshield and mirrors. Heavy-duty elastic cord around bottom for secure fit. 100-denier polyester construction.

Outlander MAX 2012 and prior | 715000676 | **$139.99**
Outlander 2012 and prior (except 2012 with 800R or 1000 engine) | 715000677 | **$129.99**

Specifically designed for storage use only. Fits with or without windshield (except extra-high model), mirrors and trunk box. Heavy-duty elastic cord around bottom provides secure fit. 100-denier polyester construction.

Outlander 2012 with 800R or 1000 engine
Outlander 2013 (except with 400 engine) | 715001353 | **$139.99**

STORAGE COVER

Specifically designed for storage use only. Fits with or without windshield (including extra-high model), mirrors and trunk box. Heavy-duty elastic cord around bottom for secure fit. 100-denier polyester construction.

Outlander MAX 2013 (except with 400 engine) | 715001668 | Black | **$149.99**

Outlander 2013 (except with 400 engine)
Outlander 2012 with 800R or 1000 engine | 715001720 | Black | **$139.99**

GUN BOOT 6.0 IMPACT† BY KOLPIN

Features largest interior room of all Kolpin Gun Boot cases. Extra room for pistol-grip-type weapons and small bipods. Easily fits firearms up to 51" in total length. Provides ample room for 60mm scopes. Hatchback design allows easy access. Snap-close cover with locking capability. Ergonomically design handle and molded attachment points for sling. Designed to accomodate left and right hand bolt-action rifles and shotguns. Includes removable, shock absorbing foam and nylon. Impact liner for superior interior protection. Requires appropriate mounting kit for installation.

715001419 | **$74.99**

LINQ SYSTEM™

NEW

LINQ GUN BOOT† RACK

This lightweight LinQ Gun Boot Rack can be mounted on either side of your Outlander or Outlander MAX using the tool-less LinQ System. For use with Gun Boot 6.0 Impact by Kolpin (715001419).

Outlander MAX 2013 (except with 400 engine) | 715001680 | Black | **$159.99**

Outlander 2013 (except with 400 engine)
Outlander 2012 with 800R or 1000 engine | 715001226 | Black | **$149.99**

LINQ SYSTEM™

BEST SELLER

LINQ MOUNTED GEAR GRIPS BY KOLPIN†

Make transporting your tools a snap by combining the Gear Grips with the LinQ System. Durable, flexible grips cushion and protect while providing a custom fit for a variety of items from 1 to 4 inches in diameter. Heavy-duty design for carrying bows, fishing poles, rakes, farm tools and more. Quick-release button opens grip quickly for easy access to gear. Heavy-duty base system built for the toughest adventures. 360° orientation. Sold in pairs.

Outlander 2012 with 800R or 1000 engine
Outlander & Outlander MAX 2013 (except with 400 engine) | 715001351 | **$99.99**

GUN BOOT SUPPORT

Used in conjunction with Kolpin Gun Boot 5.0 (715000028). Attaches to the rear rack.

Outlander & Rally (except MAX and Outlander 2012 with 800R or 1000 engine and Outlander 2013) | 715000029 | **$89.99**

RENEGADE

66 UNDERBELLY PROTECTION
67 WINDSHIELDS & LIGHT
68 SHOCKS, SHOCK PROTECTORS & MUDGUARDS
69 COVERS, RACK & BAG
70 HEATED HANDGRIPS, HITCHES & FILTERS
71 HANDLEBARS & MIRRORS
80 WINTER ACCESSORIES
106 TIRES & RIMS

Shop at
store.can-am.brp.com
or at your authorized Can-Am dealer.

REAR ALUMINUM RACK
30 lbs capacity. Compact, lightweight aluminum construction.

HEATED HAND GRIPS & THROTTLE COMBO
Ergonomically-designed control module with 4 different temperature settings.

MUDGUARD KIT
Integrated extended fender flairs for sporty look and full body protection from dirt and water.

UNDERBELLY PROTECTION
Aluminum plates made with high strength 5052 H32 aluminum and plastic deflector to protect your frame from the unexpected. A must-have for rugged terrains.

HANDLEBAR WIND DEFLECTORS
Add comfort while riding with these rugged injected plastic handlebar wind deflectors.

SPORT WINDSHIELD
Offers wind protection to your Renegade without compromising its sporty look. Easy mounting system.

FRONT SHOCK COVERS
Features ventilation holes.

NEW
REDUCED PRICES
ON SKID PLATES

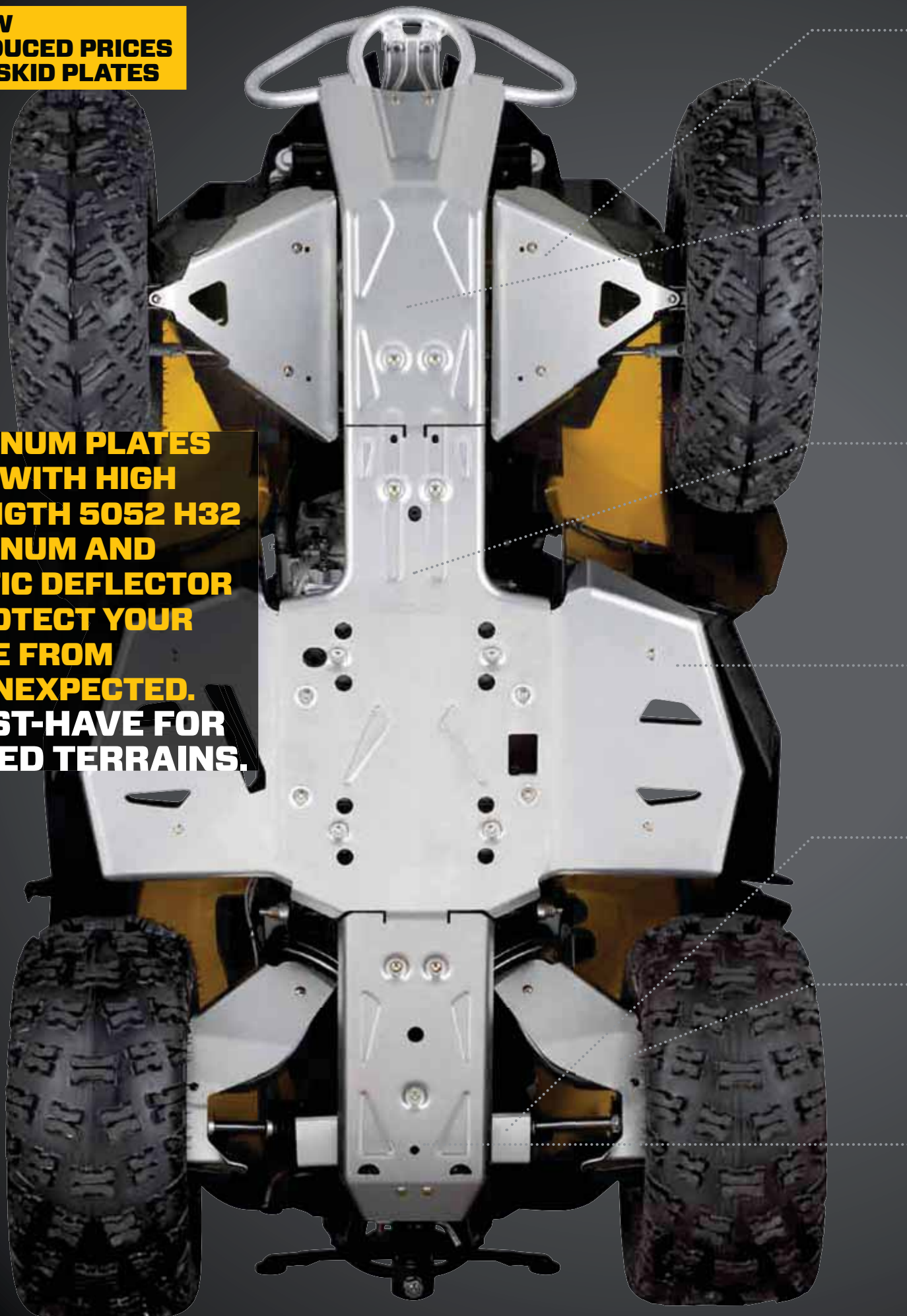

ALUMINUM PLATES MADE WITH HIGH STRENGTH 5052 H32 ALUMINUM AND PLASTIC DEFLECTOR TO PROTECT YOUR FRAME FROM THE UNEXPECTED.
A MUST-HAVE FOR RUGGED TERRAINS.

A-ARM PROTECTORS

Add more protection to your lower A-Arm. 1/8" (3 mm) thick lightweight and durable design. Easy to install. Replaces stock plastic protectors. Sold in pairs.

Embossed Can-Am logo
Renegade 2012 with 800R or 1000 engine
Renegade 2013 | 715001716 | **$119.99**

Engraved Can-Am logo
Renegade 2012 and prior (except 2012 with 800R or 1000 engine) | 715000287 | **$129.99**

FRONT SKID PLATE

3/16" (4.5 mm) thick and die-formed for strength and durability. Recessed bolt holes. Cannot be installed with Plow Mounting Kit. Engraved Can-Am logo.

Renegade 2012 with 800R or 1000 engine
Renegade 2013 | 715000925 | **$74.99**

Protection for the front portion of the frame. 3/16" (4.5 mm) thick and die-formed for strength and durability. Use in conjunction with the central chassis skid plate for full frame protection.

Renegade 2012 and prior (except 2012 with 800R or 1000 engine) | 715000548 | **$104.99**

BEST SELLER

CENTRAL CHASSIS SKID PLATE

3/16" (4.5 mm) thick and die-formed. Engraved Can-Am logo.

Renegade 2012 with 800R or 1000 engine
Renegade 2013
Standard on Renegade X xc model | 715000923 | **$109.99**

Stamped 1/8" (3 mm) aluminum construction. Recessed bolt holes. Cannot be installed with Plow Mounting Kit. Engraved Can-Am logo.

Engraved Can-Am logo
Renegade 2012 and prior (except 2012 with 800R or 1000 engine) | 715000636 | **$89.99**

FOOTWELL PROTECTOR PLATES

Bump up the impact protection to the footwells and structure. 1/8" (3 mm) thick lightweight and durable design. Use in conjunction with central chassis skid plate. Sold in pairs.

Renegade 2012 with 800R or 1000 engine
Renegade 2013 | 715001359 | **$144.99**

Renegade 2012 and prior (except 2012 with 800R or 1000 engine) | 715000686 | **$154.99**

REAR DIFFERENTIAL PROTECTOR

1/8" (3 mm) thick lightweight and durable design. Replaces stock plastic protector.

Renegade 2012 with 800R or 1000 engine
Renegade 2013 | 715000920 | **$64.99**

Renegade 2012 and prior (except 2012 with 800R or 1000 engine) | 715000285 | **$119.99**

TRAILING ARM PROTECTORS

1/8" (3 mm) thick lightweight and durable design. Replaces stock plastic protectors. Sold in pairs. Engraved Can-Am logo.

Renegade 2012 with 800R or 1000 engine
Renegade 2013 | 715001129 | **$109.99**

Renegade 2012 and prior (except 2012 with 800R or 1000 engine) | 715000311 | **$129.99**

REAR SKID PLATE

3/16" (4.5 mm) thick and die-formed for strength and durability. Must be installed with the central and front skid plates.

Renegade 2012 with 800R or 1000 engine
Renegade 2013 | 715000918 | **$69.99**

1/8" (3 mm) thick and die-formed for strength and durability. Must be installed with the central and front skid plate.

Renegade 2012 and prior (except 2012 with 800R or 1000 engine) | 715000609 | **$54.99**

BEST SELLER

SPORT WINDSHIELD

Offers wind protection to your Renegade without compromising its sporty look. Fits straight and tapered handlebars. Easy mounting system allows you to install it effortlessly.

Renegade 2013 and prior
715001212 | Yellow
715001429 | White
715001468 | Black
$169.99

CENTER CONSOLE DAY LIGHT

Mountable on top end of center console. Enhances look of vehicle.

Renegade | 715000691 | **$69.99**

FRONT & REAR X PACKAGE SHOCK & SPRING KIT

Rebound and dual speed compression adjustable gas shocks. Kit includes matching springs and hardware. Sold in pairs.

Renegade 2008-2012 (except 2012 with 800R or 1000 engine)
Front | 715000536 | **$619.99**
Rear | 715000538 | **$979.99**

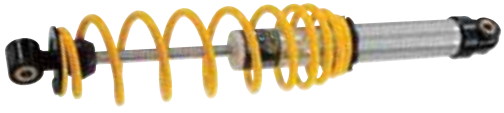

FOX SHOCKS

This FOX shock kit has been engineered for the more aggressive riders. Offers increased bump absorption and better roll control. Offers a slightly firmer ride than standard but remains very useable for all around use. Kit includes 4 shocks and springs. Rebuildable. Threaded preload adjusters. Standard on X xc model.

Renegade 2012 with 800R or 1000 engine
Renegade 2013 | 715001471 | **$569.99**

SHOCK PROTECTOR

Provides X-package shock rods with additional protection against pitting.

Fit X-package KYB shocks | 715001209 | Black | **$33.99**

FRONT SHOCK COVERS

Feature ventilation holes. Sold in pairs.

Renegade | 715500301 | **$33.99**

BEST SELLER

MUDGUARD KIT

Integrated extended fender flares for sporty look and full body protection from dirt and water. Kit of 4 includes front and rear extensions and all mounting hardware.

Renegade 2007-2012 (except 2012 with 800R or 1000 engine) | 715001115 | Black | **$199.99**

Renegade 2012 with 800R or 1000 engine
Renegade 2013 | 715001681 | **$169.99**

FRONT SWAY BAR KIT

Enhances vehicle stability and control during hard cornering.

Renegade 2010-2011 | 715000967 | **$154.99**

REAR BAG

Constructed of 600-denier, solution-dyed, water-repellent polyester. Semi-rigid thermoformed structure. Quickly and easily converts into a practical backpack. Heavy-duty water-resistant zipper. Easy to install and remove.

Renegade (all models) | 280000295 | Black | **$89.99**

BEST SELLER

REAR ALUMINUM RACK

30 lbs (14 kg) capacity. Compact, lightweight aluminum construction. Engraved Can-Am logo. Stamped 5052 aluminum center plate. Easy to install.

Renegade 2007-2012 (except 2012 with 800R or 1000 engine) | 715000242 | **$164.99**

Renegade 2012 with 800R or 1000 engine
Renegade 2013 | 715001360 | **$189.99**

RENEGADE TRAILERING COVER

300-denier solution-dyed, water-repellent polyester construction. Fits with or without mirrors and windshield attachment brackets (windshield must be removed). Key wear areas are reinforced.

Renegade (all models) | 715000683 | **$154.99**

STORAGE COVER

(Not illustrated)
Specifically designed for storage use only. Fits with or without windshield and mirrors. Heavy-duty elastic cord around bottom for secure fit. Vinyl construction.

Renegade (all models) | 715000678 | **$104.99**

BEST SELLER

HEATED HAND GRIPS & THROTTLE COMBO

New ergonomically-designed control module. 4 different temperature settings with individual controls for your thumb and your grips. LED dimmer facilitates reading temperature settings. Returns to previous heat setting. One-touch shutdown. Can-Am logo.

Outlander 2012 with 800R or 1000 engine
Outlander & Outlander MAX 2013 (except with 400 engine)
Renegade 2012 with 800R or 1000 engine
Renegade 2013 | 715001849 | **$169.99**

REAR HITCH PLATE

Bolt-on hitch plate and hardware.

Renegade 2007-2012 (except 2012 with 800R or 1000 engine) | 715000286 | **$39.99**

REAR RECEIVER HITCH

Transforms your Renegade into the same working machine as the Outlander.

Renegade 2012 with 800R or 1000 engine
Renegade 2013 | 715001329 | **$79.99**

LICENSE PLATE BRACKET

For supporting your license plate.

Renegade 2012 with 800R or 1000 engine
Renegade 2013 | 715001401 | **$19.99**

NEW

FOAM AIR FILTER BY TWINAIR

Maximizes performance by increasing air flow throughout RPM range. Maintenance-friendly, i.e. just wash, re-oil and re-use after riding in severely dusty/muddy environments.

Renegade 2013
Renegade 2012 with 800R or 1000 engine | 715001333 | **$69.99**

FOAM AIR FILTER BY TWINAIR

Maximizes performance by increasing air flow throughout RPM range. Maintenance-friendly, i.e. just wash, re-oil and re-use after riding in severely dusty/muddy environments.

Renegade 800R 2009-2011
Renegade 650 2010-2012 | 715001130 | **$69.99**

UNI® FOAM FILTER

Ease of maintenance. Can be easily washed, re-oiled and re-used when subject to severe dusty/muddy environments. Contains a rigid adaptor with an added flare providing adequate retention of the air filter.

Renegade 2011 and prior (except 2010-2011 800R and 650) | 715000310 | **$31.99**

LOCKABLE GAS TANK CAP
Protects your fuel. Meets latest EPA requirements.

Renegade (all models) |
860200387 | Black | **$39.99**

BEST SELLER

HANDLEBAR WIND DEFLECTORS
Rugged injected plastic construction. Includes removable cap for air flow adjustment. Mounting kit sold separately.

Renegade (all models)
715000733 | Yellow / Black
715000537 | White / Black
715000525 | Black / Yellow
715001706 | Black / Black
$25.99

ALUMINUM TAPERED HANDLEBAR
7/8"- 1 1/8" (22 mm - 28 mm) tapered handlebar made of 6061-T6 aluminum. Includes all hardware, center steering foam and cover.

Renegade 2013 (all models) | 715000550 | **$99.99**

MIRROR KIT FOR HANDLEBAR WIND DEFLECTORS
Handlebar wind deflector mount design. To be used with handlebar wind deflectors. Sold in pairs.

Fits on handlebar wind deflectors | 860200080 | **$24.99**

SHORT ALUMINUM MOUNTING KIT
Lightweight black die-cast aluminum construction. Includes complete hardware. Handlebar wind deflectors sold separately.

Renegade (all models) | 715001379 | **$49.99**

FULL WRAP ALUMINUM MOUNTING KIT
Lightweight black die-cast aluminum construction. Includes complete hardware. Handlebar wind deflectors sold separately.

Renegade 2013 (all models) | 715001378 | **$82.99**

HEATED HAND GRIP KIT
Keep your hands warm while riding with this easy-to-install hand grip kit. Includes a 3-position switch, switch cover, wiring harness, hand grip and handlebar end cap. Grips are 4 7/8" (12 cm) long with an interior diameter of 7/8" (22 mm). Grip heat control can be set to high (20 watts) or low (10 watts).

Renegade 2012 and prior (except 2012 with 800R or 1000 engine) | 715000322 | **$79.99**

HEATED THROTTLE LEVER ASSEMBLY
Improved heating element provides faster warm-up time and increased maximum temperature. For a perfect fit and finish, designed especially for your Can-Am ATV. Kit includes a 3-position switch, switch cover, wiring harness and throttle lever assembly.

Renegade 2012 and prior (except 2012 with 800R or 1000 engine) | 715000584 | **$59.99**

SHIFTER LOCK
Locking device locks transmission shifter in "Park" position. Minimum 5000-key combination. Fully integrated.

Renegade 2009-2011 500, 650, 800R
Renegade 2012 500, 650 | 715000689 | **$49.99**

DS 450

74 UNDERBELLY PROTECTION
75 SHOCKS & BUMPER
76 SPEEDOMETER, SPROCKETS & COVERS
106 TIRES & RIMS

Shop at
store.can-am.brp.com
or at your authorized Can-Am dealer.

HANDLEBAR WIND DEFLECTORS
Add comfort and protection while riding.

FRONT SHOCKS
Ultra-high performance KYB† fully adjustable shocks. Include rebound and high/low speed compression adjustments.

NERF BARS
Provide extra protection for assertive riding.

UNDERBELLY PROTECTION
Save your frame from the unexpected with these rough and durable underbelly protectors.

DIGITAL SPEEDOMETER

NUMBER PLATE

FRONT ALUMINUM BUMPER
Extra-large and lightweight front bumper offers the best protection for all forms of racing.

NEW
REDUCED PRICES
ON SKID PLATES

SAVE YOUR FRAME FROM THE UNEXPECTED WITH THESE ROUGH AND DURABLE UNDERBELLY PROTECTORS.
A MUST-HAVE FOR RUGGED TERRAINS.

A-ARM PROTECTORS
Lightweight injected plastic A-arm protectors provide strong protection for lower aluminum A-arm. Can-Am branding visible from top and underneath vehicle. Easy installation, no holes to drill. Sold in pairs.

DS 450 except X mx model |
715000517 | Black
715000589 | Yellow
$64.99

X PACKAGE CHASSIS SKID PLATE
Lightweight and strong full chassis skid plate. 5052 1/8" (3 mm) stamped aluminum construction. Recessed bolt holes. Includes all necessary hardware.

DS 450 | 715000506 | **$114.99**

FRONT FENDER EXTENSION
Lightweight aluminum extension connects the front fender to the nerf bar. Sold in pairs.

DS 450 | 715000514 | **$74.99**

X PACKAGE NERF BARS
Strong lightweight rectangular aluminum tubing provides extra protection for assertive riding. Complete with mounting hardware and black webbing. Must be installed with Rear Aluminum Baskets (715000673). Sold in pairs.

DS 450 2009-2013 |
715000672 | **$199.99**
DS 450 2008 and prior |
715000505 | **$209.99**

REAR ALUMINUM BASKETS
For direct replacement of stock plastic version. 1/8" (3 mm) 5052 aircraft aluminum construction and 7/8" (22 mm) tubing. Stronger construction than stock model.

DS 450 2009-2013 - Must be installed with X Package Nerf Bars (715000672) |
715000673 | **$244.99**
DS 450 2008 and prior - Can be installed with or without X Package Nerf Bars (715000505) | 715000526 | **$239.99**

BEST SELLER

X PACKAGE SWING ARM SKID PLATE
Lightweight protection for your swing arm, rear disc, sprocket and chain. 5052 3/16" (4.5 mm) aluminum construction. Replaces stock plastic protector.

DS 450 | 715000507 | **$114.99**

X PACKAGE ADJUSTABLE FRONT SHOCKS
Ultra-high performance KYB fully adjustable shocks. Include rebound and high/low speed compression adjustments. More performance oriented valving than stock vehicle. Use original stock spring. Sold in pairs.

DS 450 | 715000511 | **$574.99**

FRONT SHOCK COVERS
Offer added protection against tough terrain and weather conditions. Sold in pairs.

DS 450 | 715500302 | **$37.99**

FRONT PLASTIC GRILLE
Add color to your vehicle.

DS 450 2009 and prior | 715000516 | **$16.99**

NUMBER PLATE
Injection molded high gloss finish. To be used with X Package front aluminum bumper (715000508).

DS 450
715000521 | Black
715000522 | Yellow
$24.99

X PACKAGE FRONT ALUMINUM BUMPER
Extra-large and lightweight front bumper offers the best protection for all forms of racing. 6063 aluminum construction. Provides superior coverage to the front of your DS 450. Required to install the number plate.

DS 450 | 715000508 | **$114.99**

DS 450
PARTS & ACCESSORIES

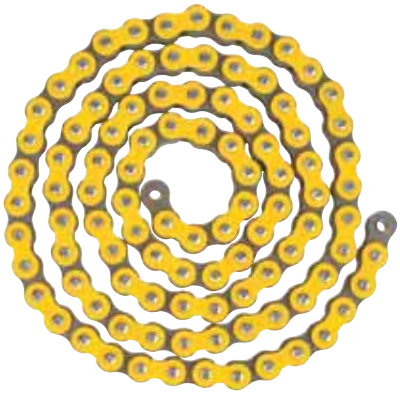

REGINA Z-RING CHAIN
This chain is the best choice for the most severe and demanding applications. Among other characteristics, the ZR chains feature high alloy steel plates and pins, solid bushings and rollers, shot-peening of plates, pins and rollers, performance-enhancing pre-stretching and "Can-Am yellow" outer plates. Stronger than stock chain (32000N). 102 link to match with different sprocket sizes. Includes connecting link.

DS 450 | 715000523 | **$114.99**

REAR SPROCKETS
Lightweight 7075 T-6 aluminum construction. Changing sprocket ratio will vary vehicle top speed and behavior. For racing applications only.

DS 450
39-tooth (-3) | 715000527 | **$79.99**
42-tooth (stock) | 715000592 | **$74.99**
44-tooth (+2) | 715000515 | **$89.99**

FRONT SPROCKETS
Hardened steel construction. Changing sprocket ratio will vary vehicle top speed and behavior. Includes snap ring. For racing applications only.

DS 450
13-tooth (-1) | 715000519
14-tooth (stock) | 715000591
15-tooth (+1) | 715000518
$26.99

AIR PREFILTER
Filters out even the tiniest of contaminants in dusty conditions. Extends the service period. Use in conjunction with the stock filter. Air filter not included.

DS 450 | 707800293 | **$19.99**

BEST SELLER

SPEEDOMETER
Digital speedometer. Complete kit with mounting pod. Includes reliable speed sensor built into transmission and extra race functions, e.g. maximum speed, average speed, lap counter, comparative average vs. actual speed and RPM. Easy to install.

DS 450 | 715000512 | **$264.99**

DS 450 TRAILERING COVER
X-attachment system. 300-denier solution-dyed, water-repellent nylon. Key areas are reinforced. Includes sponsor graphics.

DS 450 | 280000346 | **$154.99**

STORAGE COVER
(Not illustrated)
For storage use only. Fits with or without windshield and mirrors. Heavy-duty elastic cord around bottom for secure fit. Vinyl construction.

DS 450 | 280000347 | **$99.99**

NEW REDUCED PRICES ON SKID PLATES

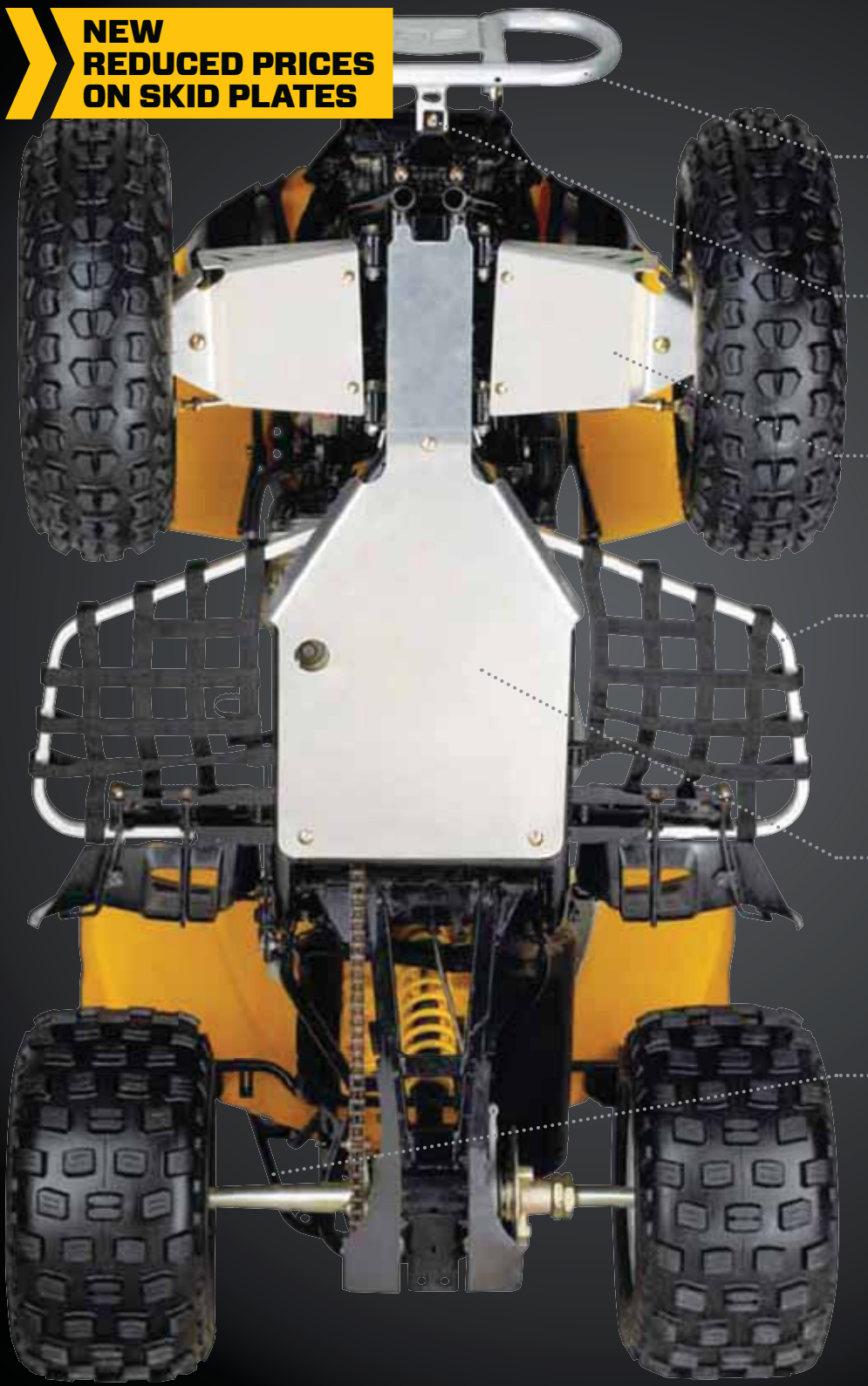

FRONT BUMPER
Adds protection to the front of your vehicle.
DS 250 | 715000172 | **$129.99**

FRONT BUMPER BRACKET
For installing the Front Bumper (715000172) to your DS 250.
DS 250 | 715000241 | **$64.99**

A-ARM PROTECTORS
These aluminum guards provide maximum A-arm protection.
DS 250 | 703500618 | **$114.99**

BEST SELLER

NERF BARS
Strong lightweight rectangular aluminum tubing provides you with extra protection for aggressive riding. Complete with mounting hardware and black webbing. Sold in pairs.
DS 250 | 703500617 | **$234.99**

FULL-BODY SKID PLATE
Aluminum full chassis skid plate designed to protect your frame and engine case from rocks and undercarriage damage. Maximum underbody protection when driving your DS 250 on the most rugged terrain.
DS 250 | 703500616 | **$144.99**

REAR RACK
Sturdy steel construction, powder paint finish. Can be used with rear rack bag (715000264).
DS 250 | 715000243 | Black | **$239.99**

REAR RACK BAG
100% water-repellent polyester bag. Specially designed to fit on the rear rack (715000243).
DS 250 | 715000264 | Black | **$89.99**

MIRROR
Stem includes 5/16" (8 mm) thread.
Left | **DS 250** | S8812ORA1000
Right | **DS 250** | S8811ORA1000
$19.99

ATV WINTER ACCESSORIES & WINCHES

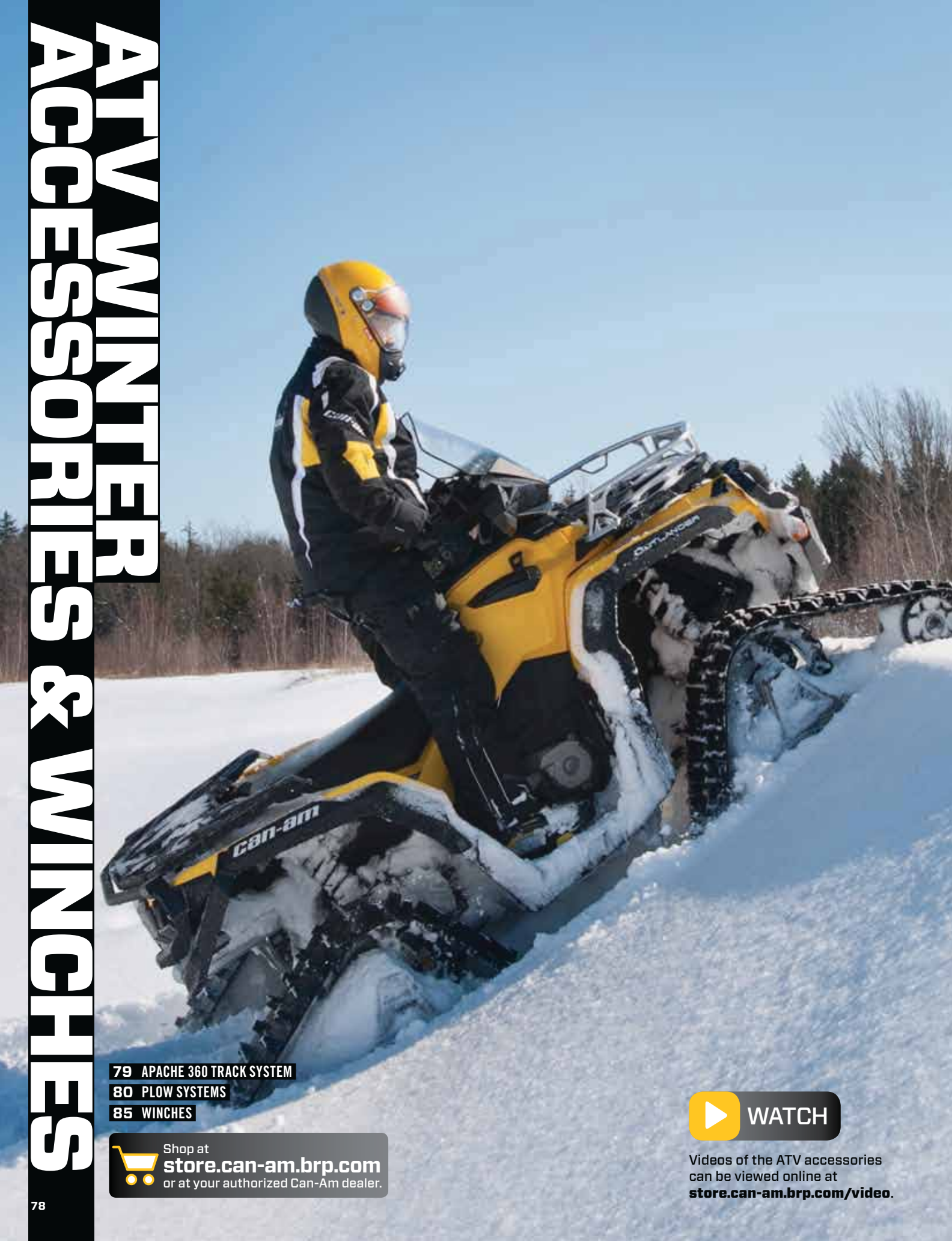

79 APACHE 360 TRACK SYSTEM
80 PLOW SYSTEMS
85 WINCHES

Shop at
store.can-am.brp.com
or at your authorized Can-Am dealer.

WATCH

Videos of the ATV accessories can be viewed online at **store.can-am.brp.com/video**.

APACHE 360 TRACK SYSTEM
PARTS & ACCESSORIES

BRP offers the best year-round track system on the market – the Apache 360

- **The Apache 360 Track System offers the biggest contact patch, highest ground clearance and lowest steering effort.**
- **With its heightened rubber over molded wheels, ice build up, friction and vibration are reduced to a minimum.**
- **Track design provides ultimate traction in any terrain.**
- **The conversion from tires to tracks can be made in less than 20 minutes using the Apache 360 Mounting Kit. There is no excuse not to get out and ride.**
- **The DPS Module, optimizes your Dynamic Power Steering (DPS) performance, maximizing steering agility at lower speeds while providing firmer steering at cruising speeds. In addition, it provides a speed correction factor for the speedometer so that your speedometer indicates the proper speed when running with your tracks installed.**

BEST SELLER

APACHE 360 TRACK SYSTEM
Best year-round system on the market, even better than the leading Apache WT. Biggest contact patch, highest ground clearance and lowest steering effort. Quick conversion from tires to tracks in less than 20 minutes for fastest switch. Reduced friction and vibration with heightened rubber over mold wheels. Track design and rubber for more traction in snow or any other type of ground surface. Apache 360 Mounting kit required, sold separately.

Outlander & Outlander MAX | 715000938 | **$3,699.99**

APACHE 360 MOUNTING KIT
(Not illustrated)
Simple system that reduces installation time. Select the right one to equip your vehicle with the Apache 360 Track System. Includes DPS Module.

Outlander 2012 and prior (except with 400 engine and 2012 with 800R or 1000 engine and except 800R X xc 2011) Outlander MAX 2012 and prior | 715001701

Outlander 2012 with 800R or 1000 engine Outlander & Outlander MAX 2013 (except with 400 engine) | 715001328 | **$299.99**

DPS MODULE
(Not illustrated)

Outlander & Outlander MAX 2010-2013 | 715001202 | **$169.99**

CVT PRE-FILTER
Designed to prevent snow intrusion in the CVT and belt slippage when Apache Track System is used in deep snow. Easy to install and remove. Standard on Renegade and Outlander 800R 2009.

Renegade & Outlander 800 2008 and prior Renegade & Outlander 500, 2012 and prior Renegade & Outlander 650, 2009 and prior | 715000552 | **$6.99**

CVT AIR INTAKE
Designed to relocate and maximize height of CVT air intake to prevent belt slippage in deep snow or muddy conditions. Equipped with integrated CVT pre-filter to also reduce dust and extend CVT and belt life.

Renegade 500, 800R 2007-2009 | 715000984 **Outlander 500, 650, 800R 2008-2009** | 715000970 | **$66.99**

AIR INTAKE PRE-FILTER
Add extra protection for your engine in harsh riding conditions. Filter blocks particles larger than 0.005". Note: A pre-filter is necessary to maintain the vehicle warranty when an Apache system is installed.

Renegade & Outlander 800 2008 and prior Renegade & Outlander 650 2009 and prior Renegade & Outlander 500 2012 and prior Renegade & Outlander 2012-2013 with 800R or 1000 engine | 715000291 | **$26.99**

AIR INTAKE PRE-FILTER
(Not illustrated)
Add extra protection for your engine in harsh riding conditions. Filter blocks particles larger than 0.005". Note: A pre-filter is necessary to maintain the vehicle warranty when an Apache system is installed.

Renegade & Outlander 800R 2009-2011 Renegade & Outlander 650 2010-2012 Outlander MAX 650 & 800R 2012 | 715000908 | **$36.99**

BUILD YOUR PLOW SYSTEM

1 Find your model → **2** Find your year → **3** Choose your type of push frame → **4** Match the mount → **5** Choose the width and style of plow → **6** Add if using Apache 360 Track System

ALPINE FLEX PLASTIC PLOW SYSTEMS

MODEL	YEAR	ATTACHMENT SYSTEM	PUSH FRAME	MOUNTING KIT	PLOW	PUSH FRAME EXTENSION
Outlander & MAX 500	**07-12**	**Alpine Flex Push Frame with Quick Attach System**	715001708	715001412	**Alpine Flex Plow 60" (152 cm)** 715001181	**Alpine Flex Push Frame Extension (705001389)** Needed when using Alpine Flex Plastic Plow with Apache 360 Track System
Outlander & MAX 500	**2013**		715001708	715001411		
Outlander & MAX 650	**06-12**		715001708	715001412		
Outlander & MAX 650	**2013**		715001708	715001411		
Outlander & MAX 800R	**06-11**		715001708	715001412		
Outlander MAX/ X mr 800R	**11-12**		715001708	715001412		
Outlander MAX 800R	**2013**		715001708	715001411		
Outlander 800R	**12-13**		715001708	715001411		
Outlander & MAX/ X mr 1000	**12-13**		715001708	715001411	**Alpine Flex Plow 54" (137 cm)** 715001677	
Renegade 500	**07-09**		715001709	715001412		
Renegade 500	**2013**		715001709	715001411		
Renegade 800R	**07-09**		715001709	715001412		
Renegade & X xc 800R	**12-13**		715001709	715001411		
Renegade & X xc 1000	**12-13**		715001709	715001411		

PLOWS

54" (137 cm) NEW

60" (152 cm) BEST SELLER

ALPINE FLEX PLOWS 54" (137 CM) & 60" (152 CM)

Plows made of flexible UHMW, the highest impact strength of any thermoplastic presently made. Enormous flex action protects the driver, unit and object accidentally impacted. Impact absorption properties return plow to its original shape. Rearward release action practically eliminates jolts from being transferred to the driver or unit. Attache and detache effortlessly thanks to a fast and easy mounting system. Groundbreaking reinvented blade turning mechanism mounted as high as possible to eliminate having to bend down to change or adjust blade's angle. High pivot point keeps plow on pavement. Compatible with all Alpine Flex Plow accessories to further enhance plow versatility.

54" (137 cm)
Clears 50" (127 cm) when angled. Ideal for clearing narrower areas, like sidewalks.
715001677 | Black | **$329.99**

60" (152 cm)
715001181 | Black | **$359.99**

PUSH FRAMES

ALPINE FLEX PUSH FRAME WITH QUICK ATTACH SYSTEM

Rearward release action practically eliminates jolts from being transferred to the driver or unit. Attaches and detaches effortlessly thanks to a fast and easy mounting system. Groundbreaking reinvented blade turning mechanism mounted as high as possible to eliminate having to bend down to change or adjust blade's angle. High pivot point keeps plow on pavement. Compatible with all Alpine Flex Plow accessories to further enhance plow versatility. Includes Plow Roller Fairlead and cable saver limit switch.

715001708 (Refer to p. 80)
715001709 (Refer to p. 80)
$499.99

ALPINE FLEX PUSH FRAME EXTENSION

Bolt-on push frame extension for use with Apache 360 Track System. Does not alter plow functionality. Fits Alpine Flex Push Frame (715001708 & 715001709).

715001389 | **$99.99**

MOUNTING KITS

PLOW MOUNTING KIT

Mounting plate precision-designed to stay on year round without compromising ground clearance. Fits with Alpine Super Duty & Alpine Flex Push Frames (715001182, 715001474, 715001708 & 715001709).

715001412 | **$102.99**

Mounting plate precision-designed to stay on year round without compromising ground clearance. Required to install Alpine Super Duty Push Frames (715001182, 715001474) and Alpine Flex Plow Push Frames (715001708 & 715001709). Fits with or without Can-Am Skid Plates.

715001411 | **$99.99**

PLOWS
PARTS & ACCESSORIES

1	2	3	4	5	6
Find your model	Find your year	Choose your type of push frame	Match the mount	Choose the width and style of plow	Add if using Apache 360 Track System

ALPINE SUPER DUTY STEEL PLOW SYSTEMS

MODEL	YEAR	ATTACHMENT SYSTEM	PUSH FRAME	MOUNTING KIT
Outlander & MAX 400	04-05	Std Alpine Super Duty	715001064	715000586
		Quick Attach Alpine Super Duty	715001063	
Outlander & MAX 400	06-13	Std Alpine Super Duty	715001064	715001205
		Quick Attach Alpine Super Duty	715001063	
Outlander & MAX 500	07-12	Std Alpine Super Duty	715001064	715001205
		Quick Attach Alpine Super Duty	715001182	715001412
Outlander & MAX 500	2013	Std Alpine Super Duty	715001064	715001688
		Quick Attach Alpine Super Duty	715001182	715001411
Outlander& MAX 650	06-12	Std Alpine Super Duty	715001064	715001205
		Quick Attach Alpine Super Duty	715001182	715001412
Outlander & MAX 650	2013	Std Alpine Super Duty	715001064	715001688
		Quick Attach Alpine Super Duty	715001182	715001411
Outlander X xc	2011	Std Alpine Super Duty	715001064	715001206
		Quick Attach Alpine Super Duty	715001063	
Outlander & MAX 800R	06-11	Std Alpine Super Duty	715001064	715001205
		Quick Attach Alpine Super Duty	715001182	715001412
Outlander MAX/ X mr 800R	11-12	Std Alpine Super Duty	715001064	715001205
		Quick Attach Alpine Super Duty	715001182	715001412
Outlander MAX 800R	2013	Std Alpine Super Duty	715001064	715001688
		Quick Attach Alpine Super Duty	715001182	715001411
Outlander 800R	12-13	Std Alpine Super Duty	715001064	715001688
		Quick Attach Alpine Super Duty	715001182	715001411
Outlander & MAX/ X mr 1000	12-13	Std Alpine Super Duty	715001064	715001688
		Quick Attach Alpine Super Duty	715001182	715001411
Renegade 500	07-09	Std Alpine Super Duty	715001064	715001205
		Quick Attach Alpine Super Duty	715001474	715001412
Renegade 500	10-12	Std Alpine Super Duty	715001064	715001206
		Quick Attach Alpine Super Duty	715001063	
Renegade 500	2013	Std Alpine Super Duty	715001064	715001688
		Quick Attach Alpine Super Duty	715001474	715001411
Renegade 800R	07-09	Std Alpine Super Duty	715001064	715001205
		Quick Attach Alpine Super Duty	715001474	715001412
Renegade & X xc 800R	10-11	Std Alpine Super Duty	715001064	715001206
		Quick Attach Alpine Super Duty	715001063	
Renegade & X xc 800R	12-13	Std Alpine Super Duty	715001064	715001688
		Quick Attach Alpine Super Duty	715001474	715001411
Renegade & X xc 1000	12-13	Std Alpine Super Duty	715001064	715001688
		Quick Attach Alpine Super Duty	715001474	715001411
Traxters & Quest	All	Std Alpine Super Duty	715001064	715000258
		Quick Attach Alpine Super Duty	715001063	

PLOW

Alpine Super Duty One Way State Plow 66" (168 cm)
715000650 | Yellow

Alpine Super Duty One Way State Plow 60" (152 cm)
715000649 | Yellow
715000207 | Black

Alpine Super Duty Straight Plow 60" (152 cm)
715000648 | Yellow
715000209 | Black

Alpine Super Duty Straight Plow 54" (137 cm)
715000647 | Yellow
715000208 | Black

PUSH FRAME EXTENSION

Alpine Super Duty Push Frame Extension (703500603)
Needed when using Alpine Super Duty Steel Plow with Apache 360 Track System

PLOWS

BEST SELLER

ALPINE SUPER DUTY STRAIGHT PLOW

Super-duty plow blades made from 12-gauge steel. Replaceable wear blades. When angled, 60" (152 cm) blade clears 53 1/2" (136 cm) path, 54" (137 cm) blade clears 48" (123 cm) path. Blades swivel left or right, 5 positions. Large pin designed for easy blade rotation to eliminate dirt and snow buildup at pivot point. Blade design provides best snow/dirt roll-off at any angle. Yellow-colored version Can-Am branded.

54" (137 cm)
715000647 | Yellow
715000208 | Black
$199.99

60" (152 cm)
715000648 | Yellow
715000209 | Black
$209.99

ALPINE SUPER DUTY ONE WAY STATE PLOW

One-way "winged" state plow designed to throw snow higher. Wing end of plow measures 25" (63 cm) high and tapers down to 16" (41 cm). Rubber flap designed to keep snow away from driver. Yellow-colored version Can-Am branded.

60" (152 cm)
715000649 | Yellow
715000207 | Black
$299.99

66" (168 cm)
715000650 | Yellow
$339.99

PUSH FRAMES

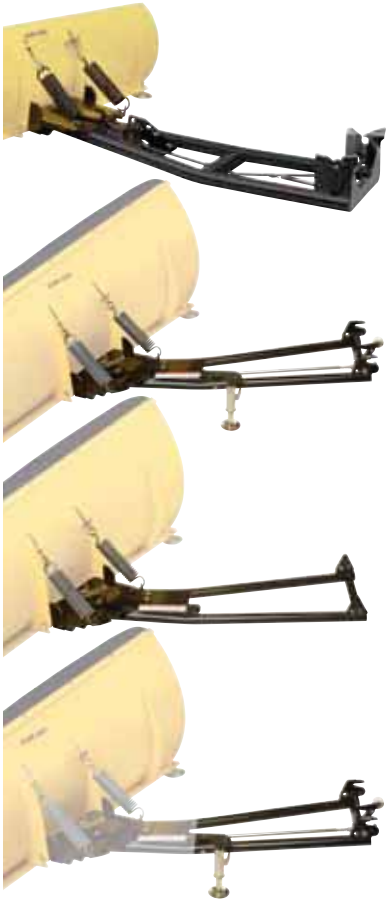

BEST SELLER

ALPINE SUPER DUTY PUSH FRAME WITH QUICK ATTACH SYSTEM

Tubes withstand roughest use. Mid-mount carriage provides up to 11 1/2" (29 cm) lift. Fits all steel blade styles. Improved auto aligning quick-attach system, easy foot lever release pedal, larger plow roller fairlead, cable saver limit switch preventing cable breakage by automatically stopping the winch. Fits on Plow Mounting Kit (715001411 & 715001412) depending on your vehicle platform.

715001182 (Refer to p. 82)
715001474 (Refer to p. 82)
$374.99

BEST SELLER

ALPINE SUPER DUTY PUSH FRAME WITH QUICK ATTACH SYSTEM

Super duty push tubes withstand the roughest use. Mid-mount carriage provides up to 11 1/2" (29 cm) of lift. Fits all steel blade styles. Fully assembled quick-attach system. Pin-ready for reduced installation time. Fits on Plow Mounting Kit (715000586, 715000258 & 715001206).

715001063 | Black | **$374.99**

ALPINE SUPER DUTY PUSH FRAME

Super duty push tubes withstand the roughest use. Mid-mount carriage provides up to 11 1/2" (29 cm) of lift. Fits all steel blade styles. Quick-attach not included.

715001064 | Black | **$239.99**

ALPINE SUPER DUTY QUICK-ATTACH SYSTEM

Available as an option to upgrade Alpine Super Duty Push Frame (715001064). The plow will be easy to install with this quick attach system. Durable with a powder-coated rust-resistant finish.

715000731 | **$134.99**

ALPINE SUPER DUTY PUSH FRAME EXTENSION

12 1/4" (31 cm) chassis extension for use with the Apache 360 Track System. Increases angle and enables extra blade rotation. Fits on Alpine Super Duty Push Frame (715001063, 715001064, 715001182 & 715001474).

703500603 | **$129.99**

ALPINE SUPER DUTY REMOTE ANGLING SYSTEM

Increases operator convenience. Swivel system allows the driver to manually pivot the plow blade from the driver's seat. Cannot be used with the Push Frame Extension (703500603).

715000260 | **$169.99**

MOUNTING KITS

PLOW MOUNTING KIT

Mounting plate precision-designed to stay on year round without compromising ground clearance. Fits with Alpine Super Duty & Alpine Flex Push Frames (715001182, 715001474, 715001708 & 715001709).

715001412 | **$102.99**

Mounting plate precision-designed to stay on year round without compromising ground clearance. Required to install Alpine Super Duty Push Frames (715001182, 715001474) and Alpine Flex Plow Push Frames (715001708 & 715001709). Fits with or without Can-Am Skid Plates.

715001411 | **$99.99**

PLOW MOUNTING KIT

Quick-release pins attach and detach plow blade and base assembly in minutes. Can be used with or without Alpine Super Duty Quick Attach System (715000731). Simplified installation. No frame drilling required.

715001206 | **$134.99**
715000586 | **$79.99**
715000258 | **$79.99**
715001205 | **$119.99**

NEW

PLOW MOUNTING KIT

Quick-release pins attach and detach plow blade and base assembly in minutes. Can be used with or without Alpine Super Duty Quick Attach System (715000731). Simplified installation. No frame drilling required.

715001688 | Black | **$99.99**

ALPINE FLEX PLOW EDGE MARKERS
For a more accurate view of the width of your plow so you avoid damaging your curb, your car or your house. Fits Alpine Flex Plows (715001181, 715001677).

715001388 | **$34.99**

ALPINE FLEX 8" (20 CM) PLOW EXTENSIONS
BEST SELLER

These conveniently extend your Alpine Flex Plow. Fits Alpine Flex Plows (715001181, 715001677).

715001385 | **$129.99**

ALPINE FLEX DRIFT CUTTER
BEST SELLER

Keeps snow securely in the plow. Fits on either left or right side. Sold individually. Fits Alpine Flex Plows (715001181, 715001677). Requires Plow Extensions.

715001386 | **$89.99**

ALPINE FLEX WEAR BLADE (STEEL)
Long-lasting wear blade that provides a sharper cut. For use with the Alpine Flex Plows (715001181, 715001677). Replaces stock wear blade.

60" (152 cm) Plow | 715001476 | **$79.99**
54" (137 cm) Plow | 715001704 | **$79.99**

ALPINE FLEX PLOW RUBBER FLAP
(Not illustrated)
Keeps snow away from the driver. Minimizes snow flowing over plow. Increases snow rolling effect. Fits Alpine Flex Plows (715001181, 715001677).

60" (152 cm) Plow | 715001387 | **$59.99**
54" (137 cm) Plow | 715001767 | **$54.99**

ALPINE FLEX WEAR BLADE (PLASTIC)
Flexible UHMW plastic construction won't scratch your driveway. For use with the Alpine Flex Plow (715001181, 715001677). Replaces stock wear blade.

60" (152 cm) Plow | 715001475 | **$129.99**
54" (137 cm) Plow | 715001703 | **$129.99**

PLOW LIGHTS
Featuring 35W H3 halogen bulbs and a lens design that achieves 110-degree beam spread to provide excellent lighting for plowing.

Outlander 2012 and prior (except 2012 with 800R or 1000 engine) | 715000063 | **$69.99**

ALPINE SUPER DUTY DRIFT CUTTER
Help keep snow in the plow. Designed with a rear pivot point. Works with both Straight and One Way State blades.

Right | Fits Alpine Super Duty Plows | 715000218
Left | Fits Alpine Super Duty Plows | 715000217
$79.99

BEST SELLER

ALPINE SYNTHETIC WINCH CABLE FOR PLOW
Especially designed for plowing applications. 8' (2.4 m) section of durable, extra-strong synthetic rope. Stands up to repeated, sharp angle pulls used to lift heavy plow blades. Temporarily replace your winch rope for plow season to save wear and tear on wire rope.

Fits Alpine Super Duty Plows & Alpine Flex Plow | 715000540 | **$39.99**

ALPINE SUPER DUTY PULLEY KIT
Pulley kit to be used in conjunction with the winch when using a snow plow. Recommended to increase winch efficiency. To be used with the XT Front Bumper.

Fits Alpine Super Duty Plows | 715000279 | **$44.99**

RT25 WARN® WINCH KIT

Fully-sealed winch with a pulling strength capability of 2,500 lbs (1,134 kg). Includes a 0.9 HP motor, 50' (15 m) of 3/16" (5 mm) wire rope, an ergonomically designed clutch knob, a mechanical brake, hand-held remote, potted-and-sealed mini-rocker handlebar switch, waterproof contactor and roller fairlead. CE certified.

Outlander & Renegade 2012 with 800R or 1000 engine
Outlander, Outlander MAX & Renegade 2013 (except with 400 engine) | 715001347 | **$449.99**

Outlander 2012 and prior (except 2012 with 800R or 1000 engine)
Outlander MAX 2012 and prior | 715000553 | **$424.99**

RT30 WARN WINCH KIT

Fully-sealed winch with a pulling strength capability of 3,000 lbs (1,361 kg). Includes a 0.9 HP motor, 50' (15 m) of 3/16" (5 mm) wire rope, an ergonomically designed clutch knob, a mechanical brake, hand-held remote, potted-and-sealed mini-rocker handlebar switch, waterproof contactor and roller fairlead. CE certified.

Outlander & Renegade 2012 with 800R or 1000 engine
Outlander, Outlander MAX & Renegade 2013 (except with 400 engine) | 715001348 | **$524.99**

Outlander 2012 and prior (except 2012 with 800R or 1000 engine)
Outlander MAX 2012 and prior | 715000528 | **$524.99**

XT15 WARN WINCH KIT

Lightweight Warn 1,500 lbs (680 kg) winch kit complete with synthetic rope, roller fairlead, mounting plates and hardware. Specifically designed for the Renegade.

Renegade 2012 and prior (except 2012 with 800R or 1000 engine) | 715000254 | **$499.99**

OUTLANDER X xc WINCH MOUNTING KIT

Required for winch installation on models equipped with the X xc bumper. Must be used in conjunction with winch mounting kit (703500547) and roller fairlead (715000011) (winch not included).

Outlander with X xc bumper | 715001121 | Black | **$39.99**

XL2500 WINCH KIT

(Not illustrated)
Complete 2,500 lbs (1,134 kg) winch and mounting kit including a roller fairlead.

Traxter & Quest | 715000546 | **$529.99**

WINCH MOUNTING PLATE

Adds functionality to your Renegade. Fits RT25 and RT30 winches.

Renegade 2012 with 800R or 1000 engine
Renegade 2013 | 715000927 | **$99.99**

WINCH BRAKE KIT

(Not illustrated)
Upgrades standard winch with brake kit. Convenient for use with plow.

Fits all 2011 and prior production Outlander with XL3000 winch | 715001135 | **$79.99**

WINCH MOUNTING KIT

(Not illustrated)

Outlander 2012 and prior (except 2012 with 800R or 1000 engine) | 715001416 | **$34.99**
Traxter | 715500108 | **$34.99**

WINCHES
PARTS & ACCESSORIES

WINCH ACCESSORIES KIT
Get the most out of your winch. Double your pulling power, change your pulling direction and keep your winch in proper working order. Includes tree straps, snatch block and shackle.

715000005 | **$134.99**

WIRELESS REMOTE CONTROL
The system is quick and easy to install, thanks to a wiring harness with an integrated antenna, and all necessary mounting hardware. The system allows you to operate your winch from anywhere within a 50' (15 m) radius, increasing your recovery options. All components are weatherproof. Works with all Outlander XT, Traxter/Quest XT MY 2004 and up and BRP accessory winches with a handlebar mounted mini-rocker switch.

715000544 | **$164.99**

WIRED REMOTE CONTROL
This kit allows the winch owners to add the hand-held remote to their winch. Works in conjunction with the mini-rocker switch.

715000197 | **$74.99**

WINCH FAIRLEAD BRACKET
Allows for more winch cable clearance when using XT-style bumpers.

Outlander XT 2012 and prior (except 2012 with 800R or 1000 engine)
Outlander MAX XT 2012 and prior | 715000696 | **$44.99**

HOOK WITH SAFETY LATCH & STRAP KIT
Heavy-duty winch-rope hook with stainless steel snap. Includes a nylon safety strap.

715000069 | **$16.99**

ROLLER FAIRLEAD
Features top, bottom and side rollers for less cable wear and smoother operation from any direction for easier winching.

715000011 | Black | **$49.99**

BEST SELLER

REPLACEMENT WIRE ROPE
Play it safe. Always carry a replacement wire rope. 50' (15 m) aircraft grade steel wire. 3/16" (5 mm) diameter. 3,000 lbs (1,1361 kg) of strength.

All Warn winches | 715000047 | **$49.99**

SYNTHETIC WINCH CABLE
Easier to manipulate than steel cable. Replaces the original cable on any factory installed Warn winch or sold as an accessory by BRP. Kit includes synthetic rope and rock guard sleeve. Always use with roller fairlead (715000011) to prevent premature wear.

50' (15 m) long. 3,000 lbs (1,361 kg) of strength.
715000539 | **$109.99**

For XT15 winch only.
40' (12 m) long. 1,500 lbs (680 kg) of strength
715000593 | **$99.99**

REAR TIRE CHAINS
Improve your traction in mud and snow. Sold in pairs.

Renegade 2013
26" (66 cm) x 10" (25 cm) x 12" (30 cm)
715500218 | **$79.99**

25" (64 cm) x 10" (25 cm) x 12" (30 cm)
715000225 | **$79.99**

DECALS

6" x 12 3/4" (15 cm x 32 cm).
704901483 | **$13.99**

12" x 4" (30 cm x 10 cm).
704901482 | **$13.99**

6" x 12 3/4" (15 cm x 32 cm).
704901484 | **$13.99**

9 per sheet. 24" x 8" (60 cm x 20 cm).
704901481 | **$11.99**

Set of 2. 2" x 6" (5 cm x 15 cm).
704901480 | **$9.99**

HOOK HOLDER
An easy way to carry your tools, firearm or bow over any terrain with confidence. Swivels to allow various mounting positions for multiple applications. Allen wrench is included for easy installation to your tubular rack.

Single | 715000042 | Black | **$49.99**
Double | 715000043 | Black | **$69.99**

HAND HELD LIGHT
High-intensity rubber spotlight comes standard with a one-inch diameter double ball and socket system. Designed to withstand more than 50 g of shock. Can be easily moved from your handlebar, rack or any other location you choose. Plugs into 12V DC outlet.

715000007 | Black | **$79.99**

CUP HOLDER
Mounts easily to handlebars or racks.
715000121 | **$74.99**

MIRROR
True vision surface 5" x 3" (13 cm x 8 cm). Matte finish. Stem includes 3/8" (10 mm) thread. Bracket (715000190) is required for installation on an Outlander without windshield.

Right - 5/16" (8 mm)
Outlander | 709400407 | **$18.99**
Left - 3/8" (10 mm)
Outlander | 709400406 | **$19.99**
Right - 3/8" (10 mm)
DS 450 | 709400523 | **$19.99**

FLAG
Make sure everyone knows what you're riding. Perfect for the dunes and new riders. 8-foot (2.4 m) length. Includes flag mount (715000127).
715000277 | Yellow | **$19.99**

FLAG MOUNT
715000127 | **$19.99**

TIE-DOWN
Our 100% polyester ratchet-style tie-down measures 10' (3 m) in length and ensures a safe load with its unique soft loop strap design.
715000276 | Black | **$14.99**

BRP CAN-AM VANITY PLATE
484800455 | **$13.99**

SSV ACCESSORIES

WATCH

Videos of the SSV accessories can be viewed online at **store.can-am.brp.com/video**.

COMMANDER

92 UNDERBELLY PROTECTION
93 BUMPERS & BODY PROTECTION
95 WINDSHIELDS
96 ROOFS & MIRRORS
97 LIGHTS
98 CAN-AM ACCESSORIES BY KOLPIN
100 STORAGE GEAR & REAR WINDOWS
102 COVERS & ELECTRICAL ACCESSORIES
103 PLOW
104 WINCH & HITCHES
106 TIRES & RIMS

Shop at
store.can-am.brp.com
or at your authorized Can-Am dealer.

GEAR RAIL
Stationary rail system specially designed for your side-by-side vehicle. Multiple mounting options for the Can-Am accessories by Kolpin line-up like the Gear Grips, Fuel Packs, Gun Boot 6.0 Impact and more.

REAR WINDOW NET
Sharp look, easy installation.

LIGHT RACK
Made of rugged aluminum with a textured black finish. Essential protection for your accessory lighting systems. Fully integrated. Can be mounted directly on the roll cage and fits the Sport Roof.

SPORT ROOF
Ultimate protection, style and integration. Easy to install and remove.

HALF WINDSHIELD
Designed for protection from wind and debris as well as optical clarity while riding. Quick-attach brackets for easy and tool-less installation.

BUMPERS
Deliver additional protection and aggressive look.

RT40 WINCH KIT
Capable of 4000 lbs pulling strength.

UNDERBELLY PROTECTION
Aluminum plates that provide essential protection.

LIGHTS
A wide range of lights can be integrated on your Commander to provide you with incomparable long range illumination: HID lights, halogen lights or combination of both.

FRONT ACCESSORY BAR
Allows installation of front rack and front bumper lights (sold separately) when vehicle is not equipped with Front XT Bumper.

ALUMINUM PLATES MADE WITH HIGH STRENGTH 5052 H32 ALUMINUM AND PLASTIC DEFLECTOR TO PROTECT YOUR FRAME FROM THE UNEXPECTED.
A MUST-HAVE FOR RUGGED TERRAINS.

BEST SELLER

FRONT SKID PLATE
Draw-formed 5052-H32 aluminum front skid plate provides essential protection. 3/16" (4.5 mm) thick for durability and strength. Engraved Can-Am logo.

Commander 2011 and up (all models) | 715000692 | **$159.99**

BEST SELLER

A-ARM PROTECTORS
5052-H32 aluminum A-arm plates and plastic deflectors provide essential protection and aggressive look. 3/16" (4.5 mm) thick for durability and strength. Engraved Can-Am logo. Sold in pairs.

Commander 2011 and up (all models) | 715000660 | **$164.99**

LATERAL SKID PLATES
Draw-formed 5052-H32 aluminum lateral skid plates provide essential protection. 3/16" (4.5 mm) thick for durability and strength. Engraved Can-Am logo. Sold in pairs.

Commander 2011 and up (all models) | 715000950 | **$229.99**

CENTRAL SKID PLATE
5052-H32 aluminum, 3/16" (4.5 mm) thick. Pre-cut holes for fluid and mud drainage, and servicing access. Engraved Can-Am logo. Direct replacement of factory installed plastic skid.

Commander 2011 and up (all models) | 715000693 | **$314.99**

REAR SKID PLATE
5052-H32 aluminum, 3/16" (4.5 mm) thick. Provides additional protection to rear end of vehicle. Engraved Can-Am logo. Direct replacement of factory installed plastic skid.

Commander 2011 and up (all models) | 715000694 | **$114.99**

TRAILING ARM PROTECTORS
5052-H32 aluminum trailing arm plates and plastic deflectors provide essential protection. 3/16" (4.5 mm) thick for durability and strength. Sold in pairs.

Commander 2011 and up (all models) | 715000661 | **$149.99**

FRONT RACK
Durable finish. Equipped with genuine Can-Am clamps for easy mounting on required XT Bumper or Front Accessory Bar (sold separately). Allows access to air filter, washer fluid or cooling. 75 lbs load capacity.

Commander 2011 and up (all models) | 715000985 | **$299.99**

OFF-ROAD XTREME FRONT BUMPER
Delivers additional heavy-duty protection that works with or without the front XT bumper. Textured black electrocoated for durability and rugged style. Can-Am logo tag. Does not fit with Signaling Kit (715001308).

Commander 2011 and up (all models) | 715000951 | **$299.99**

FRONT XT BUMPER
Made of heavy gauge steel for additional protection. XT styled for matching appearance. Textured black electrocoated for durability and rugged style. Effortless mounting. Standard on X, XT and Limited models.

Commander 2011 and up (all models) | 715000958 | **$219.99**

BEST SELLER

FRONT LIGHT PROTECTION
Works in conjunction with XT bumper, offering protection to front headlights and a sporting aggressive look. Textured black electrocoated for durable finish and rugged style. Integrated Can-Am fastening system provides efficient mounting vs traditional P-clamps.

Commander 2011 and up (all models) | 715000656 | **$159.99**

ALLOWS TO OPEN LOWER TAILGATE

REAR BUMPER
Integrated tubular system provides sporty look while protecting vehicle's bodywork. Flips with cargo box and lower tailgate.

Commander 2011 and up (all models) | 715000657 | **$249.99**

LOWER TAILGATE PROTECTOR
Aluminum body plating covering lower tailgate provides additional protection and aggressive look.

Commander 2011 and up (all models) | 715001097 | **$89.99**

SIDE MIRROR
Includes clamp for installation on roll cage.

RH | **Commander 2011 and up (all models)** | 715001418 | Black | **$89.99**

LH | **Commander 2011 and up (all models)** | 715001192 | Black | **$89.99**

BEST SELLER

PANORAMIC CENTER MIRROR
Convex mirror for wide angle visibility. Can be used with or without roof and windshields. Light switches not included. Sport Visor sold separately.

Commander 2011 and up (all models) | 715000956 | **$74.99**

REARVIEW MIRROR
Car-type mirror. Can be used with or without roof and windshields.

Commander 2011 and up (all models) | 715001191 | Black | **$89.99**

XT BOX RAILS
Add integrated tie down area to your cargo box while enhancing the look. Textured black finish. Standard on XT and Limited models.

Commander 2011 and up (all models) | 715000957 | **$99.99**

XT MUDGUARDS
Deliver aggressive look while providing added protection from dirt and debris. Includes front and rear extensions and all mounting hardware. Standard on XT and Limited models.

Commander 2011 and up (all models) | 715001013 | **$199.99**

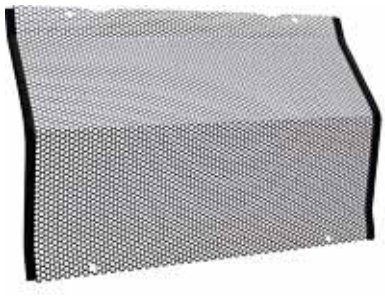

RADIATOR PROTECTOR
Black epoxy electrocoated metal shield that mounts over radiator face to provide protection from stones and branches.

Commander 2011 and up (all models) | 715001126 | Black | **$64.99**

ROCK SLIDER
Protects vehicle's sides and undercarriage against large obstacles. Textured black electrocoated for durability. Standard on Commander X model.

Commander 2011 and up (all models) | 715001722 | **$259.99**

NEW

GLASS WINDSHIELD AND WIPER PACKAGE

Glass windshield with wipers and washer fluid dispenser. Metal frame with DOT approved glass. Wide coverage (2 wipers). 2-speed wiper control. Windshield washer tank integrated in the vehicle service center.

Commander 2011 and up (all models) | 715001678 | **$1,049.99**

BEST SELLER

HALF WINDSHIELD

New design. Designed for protection from wind and debris as well as optical clarity. This rugged, durable polycarbonate construction offers better impact resistance than acrylic windshields. Features reverse angle lip to deflect air flow. Non yellowing, non crazing, non cracking and UV resistant properties. Quick-attach brackets procure fast, easy and tool-less installation and removal. Standard on Limited model.

Commander 2011 and up (all models) | 715001696 | **$209.99**

NEW

FULL WINDSHIELD (HARDCOATED)

New design. Combines the utmost in protection from the elements with optical clarity while riding. Hardcoated (both sides) polycarbonate material offers better impact and abrasion resistance, as well as prolonged protection against wear-and-tear for longer "like-new" look than acrylic windshields. Non yellowing, non crazing, non cracking and UV resistant properties. Quick-attach brackets procure fast, easy and tool-less installation and removal.

Commander 2011 and up (all models) | 715001698 | **$499.99**

FULL WINDSHIELD

Designed for optical clarity and better impact resistance than acrylic windshields thanks to durable polycarbonate construction. Non yellowing, non crazing, non cracking and UV resistant properties. Quick-attach brackets procure fast, easy and tool-less installation and removal.

Commander 2011 and up (all models) | 715001414 | **$349.99**

FRONT SHOCK COVERS

Offer added protection in rough terrain and weather conditions. Can-Am branded. Sold in pairs.

Commander 2011 and up (all models) | 715001324 | **$39.99**

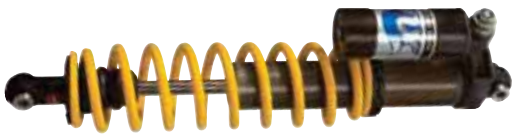

FOX PERFORMANCE FRONT SHOCKS

Fox Piggyback racing shocks. Includes rebound and high/low speed compression adjustments. Sold in pairs. Standard on X model.

Commander 2011 and up (all models) | 715001022 | **$999.99**

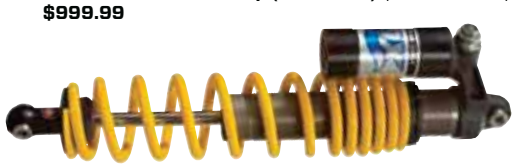

FOX PERFORMANCE REAR SHOCKS

Fox 2.0 Position Sensitive racing shocks. Includes rebound and high/low speed compression adjustments. Sold in pairs. Standard on X model.

Commander 2011 and up (all models) | 715001023 | **$1,109.99**

AIR INTAKE PRE-FILTER

Add extra protection to your engine in harsh riding conditions. Filter blocks particles larger than 0.005" (0.1 mm).

Commander 2011 and up (all models) | 715000953 | **$39.99**

NEW CAMO COLOR

SPORT ROOF

Economy roof for protection against the elements. Thermoformed TPO construction. Can be assembled with Light Rack for Sport Roof (715001686 or 715001094).

Commander 2011 and up (all models)
715001679 | Black | **$499.99**
715001444 | Camo | **$799.99**

DELUXE CONVERTIBLE ROOF

Ultimate in protection, style and integration. Twinsheet HDPE manufacturing delivers premium look, and complete coverage when combined with Sport Visor. Quick-attach bracket procures fast, easy and tool-less installation and removal. Standard on Limited model.

Commander 2011 and up (all models)
715001478 | Black
715001479 | Yellow
715001306 | Red
$499.99

BEST SELLER

SPORT VISOR

Aggressive designed, twinsheet HDPE sport visor complete with integrated driver and passenger inner storage pockets. Required for installation of Can-Am Light Rack (715001718, 715001687). Complete with integrated light switch knock outs. Creates full roof for maximum element protection when combined with the Deluxe Convertible Roof. Easy installation and removal. Can be used in conjunction with any windshield. Standard on Limited model.

Commander 2011 and up (all models) | 715000762 | Black | **$299.99**

HID LIGHTS BY HELLA†

Incomparable and powerful HID long range illumination plug-and-play system converts night usage into virtually daytime riding. Integrated ballast unit with 3.25" clear glass lens and swivel mounting heavy-duty bracket provides compact design. Water and dust proof IP67 and IP6K9K. Highest electromagnetic compatibility rating, i.e. EMC Class 5 according to CISPR 25, for total disturbance-free electronic operation. Peak light performance with just 35W. Luminous flux is 2.5 times higher than conventional halogen bulb with 35% less energy consumption. High vibration resistance with longer lifetime than halogen bulb. Constant light intensity even under unsteady power supply voltage. Includes basic wiring and switch. Works in conjunction with halogen and/or HID lights separately or in combination without overloading your charging system. Sold in pack of 2.

To install on Roll Cage or Sport Roof:
Must be used with Light Rack for Roll Cage or Sport Roof (715001686, 715001094).

To install on Sport Visor:
Must be used with Light Rack for Sport Visor (715001718 or 715001687).

To install on Front Accessory Bar or XT Bumper:
Light Mount Kit (715001366) is required to install the HID lights. Can be installed on the Front Accessory Bar (715001377) or on the XT Front Bumper (715000958).

Commander 2011 and up (all models) | 715001382 | **$899.99**

BEST SELLER

HALOGEN LIGHTS BY HELLA

Delivers long range illumination. 3.25" clear glass lens and swivel mounting heavy-duty bracket provides compact design. Includes basic wiring and switch. Works in conjunction with halogen and/or HID lights separately or in combination without overloading your charging system. Sold in pack of 2.

To install on Roll Cage or Sport Roof:
Must be used with Light Rack for Roll Cage or Sport Roof (715001686 or 715001094).

To install on Sport Visor:
Must be used with Light Rack for Sport Visor (715001718 or 715001687).

To install on Front Accessory Bar, XT Bumper or Xtreme Bumper:
Light Mount Kit (715001366) is required to install the halogen lights. Can be installed on the Front Accessory Bar (715001377), the XT Front Bumper (715000958) or Xtreme Bumper (715000951).

Commander 2011 and up (all models) | 715001383 | **$169.99**

NEW BLACK COLOR

LIGHT RACK FOR SPORT VISOR

Provides Can-Am side-by-side vehicle with a custom look. Made of rugged aluminum. Essential protection for your accessory lighting systems. Works in conjunction with Halogen and/or HID lights separately or in combination without overloading your charging system. Fully integrated. Can be mounted directly on the Sport Visor (715000762). Wiring included. Lights sold separately.

Commander 2011 and up (all models)
715001718 | Silver
715001687 | Black
$219.99

NEW

LIGHT RACK FOR ROLL CAGE OR SPORT ROOF

Provides Can-Am side-by-side vehicle with a custom look. Made of rugged aluminum. Essential protection for your accessory lighting systems. Works in conjunction with Halogen and/or HID lights separately or in combination without overloading your charging system. Fully integrated. Can be fixed directly to the roll cage or mounted on the Sport Roof (715001679 or 715001444). Wiring included. Lights sold separately.

Commander 2011 and up (all models)
715001686 | Black
715001094 | Silver
$289.99

FRONT ACCESSORY BAR

Textured black electrocoated for durability and rugged style. Can-Am casted clamps for easy mounting. Allows installation of front rack and HID or halogen lights (sold separately). Not compatible with XT Front Bumper.

Commander 2011 and up (base model) |
715001377 | Black | **$99.99**

LIGHT MOUNT KIT

Effortless installation and integrated dash switch convenience thanks to Can-Am casted clamps that facilitate light mounting and all the necessary wiring. Requires HID lights (715001382 sold separately) or Halogen lights (715001383 sold separately). Delivers numerous light installation options.

Commander 2011 and up (all models) |
715001366 | Silver | **$149.99**

RAM SPOTLIGHT

High-intensity (37.5 watts), heavy-duty spotlight standard-equipped with 1" diameter rubber-coated double ball and socket system. Can be easily moved from your XT box rails to any other location. Cargo Box 12 V Power Outlet (715001321) required for cargo box mounting.

Commander 2012 (all models) |
715000007 | Black | **$79.99**

SIGNALING KIT

Complete flasher, horn and illuminated license plate holder. Integrates onto vehicle. Not for road use.
Does not fit with the Off-road Xtreme Front Bumper (715000951) and Lower Tailgate Protector (715001097).

Commander 2011 and up (all models) | 715001308 | **$429.99**

BEST SELLER

GUN BOOT 6.0 IMPACT BY KOLPIN

Features largest interior room of all Kolpin Gun Boot cases. Extra room for pistol-grip-type weapons and small bipods. Easily fits firearms up to 51" in total length. Provides ample room for 60mm scopes. Hatchback design allows easy access. Snap-close cover with locking capability. Ergonomically designed handle and molded attachment points for sling. Designed to accommodate left and right hand bolt-action rifles and shotguns. Includes removable, shock absorbing foam and nylon impact liner for superior interior protection. Requires Gear Rail (715001320) & Gun Boot Mount by Kolpin (715001420) for installation. Compatible for dual mount with Additional Gun Boot Mount (715001586).

Commander 2011 and up (all models) | 715001419 | Black | **$74.99**

GUN BOOT MOUNT BY KOLPIN

Fits one Kolpin Gun Boot 6.0 Impact (715001419). Lightweight and extremely durable. Easily adjustable without the use of any tools. Offers precision gun angle adjustability. Requires Gear Rail (715001320).

Commander 2011 and up (all models) | 715001420 | Black | **$74.99**

ADDITIONAL GUN BOOT MOUNT

(Not illustrated)
Requires Gear Rail Mount by Kolpin (715001422).

Commander 2011 and up (all models) | 715001586 | **$109.99**

FUEL PACK BRACKET BY KOLPIN

Easy, quick and secure bracket for your fuel pack that leaves plenty of room for your other gear. 1/4-turn-action knob allows quick and easy removal of fuel pack from bracket. Perfect match with the 1.5 Gallon Fuel Pack Jr. (715001425). Mount the 4-Gal Fuel Pack (715001424) with the use of 2 Fuel Pack Brackets.

Commander 2011 and up (all models) | 715001427 | Black | **$39.99**

FUEL PACK AND FUEL PACK JR. BY KOLPIN

Fuel container built tough to facilitate longer rides. Mounts on Commander, garage wall, camper, etc. Made of puncture-resistant, crush-proof, high-density polyethylene. Self-venting and self-closing spout is CARB and CPSC compliant for spill-proof operation. Molded handle for easy carriage and filling. Requires Gear Rail (715001320) for easy and convenient attachment to your Commander. Mounting options include Gear Rail Mount (715001422) and Fuel Pack Bracket (715001427). Legal in all 50 States. CARB compliant and EPA certified. Not available in Canada.

Commander 2011 and up (all models)

4 Gallon | **34 1/2" x 3" x 13 1/4"** | 715001424 | Red | **$94.99**

Not available in Canada. Requires Gear Rail (715001320) and Fuel Pack Bracket by Kolpin (715001427).

1.5 Gallon | **11 1/2" x 4 1/2" x 12"** | 715001425 | **$39.99**

UNIVERSAL SAW PRESS BY KOLPIN

Specially crafted for transporting your chainsaw securely and safely aboard your side-by-side vehicle. Heavy-duty, black powder-coated metal bracket designed to attach any chainsaw model with up to a 20" (51 cm) bar. Rubber pads provide cushion and tight fit. Hinged design for quick removal. Holds saw in vertical position or 45° angle in either direction. Requires Gear Rail (715001320). Protective sheath included.

Commander 2011 and up (all models) | 715001423 | Black | **$99.99**

CAN-AM EXCLUSIVE

GEAR RAIL

Stationary rail system specially designed for your side-by-side vehicle. Mounts on roll bar behind driver and passenger. Universal mounting options for many Kolpin accessories like Gear Grips, Fuel Packs, Gun Boot 6.0, Gun Boot Mount and Universal Saw Press. Rail is made with heavy-duty 7-gauge extruded anodized black aluminum. Includes one versatile Gear Rail Mount by Kolpin (715001422).

Commander 2011 and up (all models) | 715001320 | Black | **$209.99**

GEAR RAIL MOUNT BY KOLPIN

Accessory bracket for mounting additional accessories to the Gear Rail (715001320). Includes C clamp and metal mounting brackets.

Commander 2011 and up (all models) | 715001422 | **$34.99**

GEAR GRIPS BY KOLPIN

Durable, flexible grips cushion and protect while providing a custom fit for a variety of items 1" to 4" (2.5 cm to 10 cm) in diameter. Heavy-duty design for carrying bows, fishing poles, rakes, farm tools and more. Quick-release button opens grip quickly for easy access to gear. Heavy-duty base system built for the toughest adventures. Compatible with Gear Rail (715001320). Sold in pairs.

Commander 2011 and up (all models) | 715001421 | **$64.99**

COMMANDER
PARTS & ACCESSORIES

SOFT REAR WINDOW
Clear soft window made from see-through vinyl with cold cracking resistance to temperatures down to -4°F (-20°C). Prevents dust and rain from drafting back into the vehicle in harsh riding environments. Quick installation with 2" Velcro straps. White Can-Am logo.

Commander 2011 and up (all models) | 715001373 | **$99.99**

BEST SELLER

TONNEAU COVER
Fitted to cover all of the items in your cargo box thoroughly. Prevents splash from entering the cargo box. Easily removable for quick access. Fits with or without XT box rails.

Commander 2011 and up (all models) | 715001194 | Black | **$249.99**

CARGO BOX ELASTIC NET
Elastic net designed to hook to the bottom of the cargo box. Ideal for retaining lighter, irregular-shaped items.

Commander 2011 and up (all models) | 715001372 | Black | **$39.99**

CARGO BOX STORAGE NET
Mesh net. Stores items vertically. Quick installation.

Commander 2011 and up (all models) | 715001370 | Black | **$59.99**

CARGO BOX NET
Solid net designed to hook to the bottom of the cargo box for secure and compact confinement of your cargo. Can-Am branded.

Commander 2011 and up (all models) | 715001371 | Black | **$59.99**

CARGO BAG
Rugged all-purpose cargo bag with rain cover for additional protection against the elements. Fits snuggly inside lower cargo box.

Commander 2011 and up (all models) | 280000539 | Black | **$149.99**

BEST SELLER

REAR WIND SCREEN
Full rear mesh coverage reduces backdraft when windshield is installed. Mounts to roll bar. White Cam-Am logo on black mesh. Standard on Limited model.

Commander 2011 and up (all models) | 715001193 | **$69.99**

REAR WINDOW NET
Net designed to look sharp. Installs in a snap. 2" Velcro straps. Mounts to roll bar. White Can-Am logo.

Commander 2011 and up (all models) | 715000832 | Black | **$99.99**

XT SPORT STEERING WHEEL
Polyurethane soft-touch black grip highlighted with silver spokes. Standard on XT and Limited models.

Commander 2011 and up (all models) | 715001134 | **$149.99**

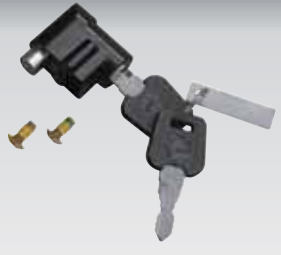

LOCK FOR TAILGATE
Device locks lower tailgate. Includes key.

Commander 2011 and up (all models) | 715001127 | **$29.99**

WORK KEY
Key limits vehicle speed to 25 mph for use on construction sites.

Commander 2011 and up (all models) | 715001201 | **$45.99**

LOCKABLE GAS CAP
Protects your fuel. Meets latest EPA requirements.

Commander 2011 and up (all models) | 715001124 | **$44.99**

LICENSE PLATE HOLDER
Supports your license plate.

Commander 2011 and up (all models) | 715001326 | **$30.99**

COMMANDER
PARTS & ACCESSORIES

BEST SELLER

COMPLETE AUDIO SYSTEM
This integrated Jensen wired remote, amplifier/receiver and speaker combination provides durability, convenience and ease of installation. The waterproof design and UV resistant materials mean no matter how extreme your riding this unit will follow you through. LED illumination makes this unit easy to use and easy to see. You can select between AM/FM tuner, 7-channel weather band and it's IPod, USB 2.0, MP3, WMA ready to kick out all your favorites from its front and rear speakers. Top it off with plug and play installation and there is no easier choice to make when it comes to riding entertainment. 50Wx4, -10°C to 60°C operating range. Order Radio/GPS console (715001404). Standard on Limited model.

Commander 2011 and up (all models) | 715001197 | **$839.99**

FRONT & REAR SPEAKERS
Complete your system with this pair of great sounding 5.25" (13 cm) outdoor speakers. Kit includes black speaker boxes and plug and play wiring to match up with Remote/Amplifier (715001313). Set of 2. Standard on Commander Limited.

Front 5.25" outdoor speakers
Commander 2011 and up (all models) | 715001309 | **$134.99**

Rear 6.25" outdoor speakers
Commander 2011 and up (all models) | 715001315 | **$269.99**

RADIO WITH AMPLIFIER
Designed for outdoor use, this wired remote and amplifier combo are ready to install in your Commander. Plug and play wiring will have you listening to AM/FM tuner, 7-channel weather band or iPod, USB 2.0, MP3, WMA media in no time. Rugged construction ensures longevity. 50Wx4, -10°C to 60°C operating range. Order Radio/GPS Console Adaptor (715001404). Standard on Commander Limited.

Commander 2011 and up (all models) | 715001313 | **$449.99**

GARMIN† MONTANA 650T GPS
Bright 4" sunlight readable, 65K Color TFT, touchscreen color display (272 X 480 pixels). High sensitivity, WAAS-enabled GPS receiver and Hotfix†. Wirelessly, share with your friends, routes, tracks, way points and geocaches between units. Worldwide built-in basemap with shaded relief, preloaded US topo. 3-axis compass and barometric altimeter. MicroSD† card slot for optional mapping. 5 mega pixel autofocus digital camera with automatic geo-tagging. 3.5mm audio jack. High speed USB and serial interface. Rugged, waterproof (IEC 60529 IPX7). Multiple battery options: user replaceable 3AA (up to 22 hours) or rechargeable lithium (up to 16 hours). Includes mount for use with Radio/GPS Console Adaptor (715001404). Standard on Limited model.

Commander 2011 and up (all models) | 715001361 | **$649.99**

RADIO / GPS CONSOLE ADAPTOR
Update center console for GPS and/or audio system integration. Commander-styled for matching appearance. Includes a cover for unused GPS or audio system slot. Standard on Limited model.

Commander 2011 and up (all models) | 715001404 | Black | **$69.99**

HEATED VISOR OUTLET
Optional visor outlet for your Commander that delivers fog-free riding. Quick and easy installation. Sold individually. Heated Visor not included.

Commander 2011 and up (all models) | 715001246 | **$44.99**

CARGO BOX 12-V POWER OUTLET
12-Volt accessories outlet. Easy plug-in harness. Wiring harness included.

Commander 2012 (all models) | 715001321 | Black | **$34.99**

BEST SELLER

TRAILERING AND STORAGE COVER
Can-Am branded 300-denier solution-dyed, water repellent polyester construction. Fits with or without roof, light rack, front rack, light protector, rear bumper, extreme bumper, side mirrors. Has trap for fuel, access to cargo box and passenger area. Heavy-duty cord around bottom for secure fit. Features soft material in the windshield area to prevent scratches while trailering.

Commander 2011 and up (all models) | 715001025 | **$279.99**

STORAGE COVER
100-denier solution-dyed, water-repellent polyester construction. Heavy-duty elastic cord around bottom and polypropylene webbing across bottom for secure fit. Fits with or without most accessories.

Commander 2011 and up (all models) | 715001368 | Black | **$219.99**

ANTI-POOLING POLES
8 mm fiberglass poles to prevent snow or rain from accumulating on your trailer cover. Sold in pairs. Comes with nylon bag. Not for use while trailering.

Commander 2011 and up (all models) | 715001374 | **$19.99**

SUPER DUTY PLOW

Heavy-duty 12 gauge steel blade with integrated reinforcement for maximum durability. Complete plow system with manual lifting and angling. Heavy-duty push tubes withstand the roughest uses. Requires a winch for raising and lowering. Easy to install. Quick disconnect system for fast installation and removal. Front mount system provides a minimum of 11" of lift. Front mount included.

Commander 2011 and up (all models) | 715001140A | **$1,199.99**

PLOW RUBBER FLAP

Keeps snow away from the driver and helps snow to roll in front of the plow.

Commander 2011 and up (all models) | 715001219 | **$89.99**

PLOW EDGE MARKERS

For a more accurate view of the width of your plow. Allows you to work closely around objects.

Commander 2011 and up (all models) | 715001216 | **$34.99**

PLOW DRIFT CUTTER

Keeps snow securely in the plow. Allows you to cut a cleaner pass. Sold individually.

Commander 2011 and up (all models) | 715001218 | Black | **$89.99**

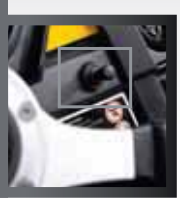

WARN PLOW ROLLER FAIRLEAD

Larger diameter lower roller reduces wear on wire rope for plow application.

Commander 2011 and up (all models) | 715001223 | **$64.99**

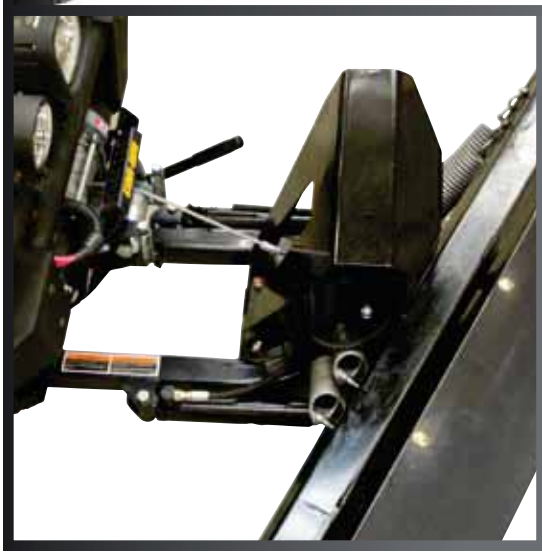

NEW

SUPER DUTY PLOW HYDRAULIC ANGLING KIT

New kit that allows you to have full up/down and left/right plow control at your fingertips. Pre-assembled, it comes with everything you need to turn your Commander Super Duty Plow into a quick, easy-to-control unit from the driver's seat. Using one hand to control all plow motions with the supplied joystick will allow you to easily concentrate and manage your plowing task. With this commercial grade kit, you will send snow exactly where you want reliably all winter long. Winch and plow sold separately.

Fits Super Duty Plow | 715001220 | **$1,199.99**

PLOW BLADE EXTENSIONS

Side extensions for widening your plow blade by 6" (15 cm) on each side. Includes rubber flaps for extension parts. Sold in pairs.

Commander 2011 and up (all models) | 715001217 | Black | **$269.99**

COMMANDER
PARTS & ACCESSORIES

SYNTHETIC CABLE EXTENSION
Lightweight 1/4" diameter, easy to handle and won't rattle in cargo box. Easily attaches to winch cable to provide additional 50' of distance. 4000 lbs single line capacity.

Commander 2011 and up (all models) | 715001120 | **$132.99**

SYNTHETIC WINCH CABLE
50 feet of 7/32" synthetic cable for RT40 Warn winch. NOTE: Replacing a wire rope with synthetic cable also requires changing the fairlead to avoid damage and wear to the synthetic cable from the rough surface of the old fairlead.

Commander 2011 and up (all models) | 715001118 | **$129.99**

REPLACEMENT WIRE ROPE
55 feet of 7/32" wire rope for RT40 Warn winch.

Commander 2011 and up (all models) | 715001117 | **$64.99**

WINCH & HITCH SUPPORT PLATE
Mounting plate for Warn RT40 Warn winch kit (715000658) and front 2" receiver hitch (715000663). Standard on XT and Limited models.

Commander 2011 and up (all models) | 715000704 | **$89.99**

ROLLER FAIRLEAD
Suggested when changing the wire-rope. Heavy-duty replacement fairlead for RT40 Warn winch.

Commander 2011 and up (all models) | 715001119 | **$51.99**

FRONT SWAY BAR
Enhances vehicle performance and control during hard cornering. Standard on X model.

Commander 2011 and up (all models) | 715001125 | **$124.99**

FRONT 2" RECEIVER HITCH
Can be used with a standard 2" draw bar. Complete with integrated quick locking/release pin for easy installation and removal of draw bar. Allows for front-mount pulling/pushing or additional accessory attachments, such as a plow. Winch & hitch support plate (715000704) is required for installation.

Commander 2011 and up (all models) | 715000663 | **$89.99**

MULTIMOUNT TOW
1.5" bar system, no ball. Requires multimount winch kit (715000659).

Commander 2011 and up (all models) | 715001142 | **$44.99**

RT40 WARN WINCH KIT
Fully-sealed, capable of 4,000 lbs pulling strength. Includes 1.5 HP motor, 55 feet of 7/32" wire rope, ergonomically designed clutch knob, mechanical brake, hand-held remote and integrated dash switch, waterproof contactor and roller fairlead. CE certified. Standard on Limited and XT package.

Commander 2011 and up (all models) | 715000658 | **$669.99**

WIRELESS REMOTE CONTROL
The system is quick and easy to install, thanks to a wiring harness with an integrated antenna, and all necessary mounting hardware. The system allows you to operate your winch from anywhere within a 50' (15 m) radius, increasing your recovery options. All components are weatherproof.

715001592 | **$179.99**

MULTIMOUNT WINCH KIT
For use with RT40 Warn winch kit (715000658). Versatile system that can be easily mounted at the front or rear of the Can-Am Commander side-by-side vehicle. Complete with Can-Am plug-and-play front and rear wire harness. Ergonomically formed handle makes it easy to carry from front to rear. Front 2" receiver hitch (715000663) is required for installation. Integrated receiver allows for use with multimount tow (715001142), not included.

Commander 2011 and up (all models) | 715000659 | **$299.99**

OFFICIAL LICENSED PRODUCTS

NEW

CAN-AM GAME DAY EVENT CHAIR

Folds up and fits into carrying case with strap for easy transport and storage. Sturdy steel-tube frame supports up to 300+ lbs (136 kg). Features armrests with built-in cup holders.

CA12A30900

CAN-AM LAPTOP BACKPACK

Two main compartments. Yoke style shoulder straps. Fits most 17" (43 cm) laptops. Built-in audio pocket with headphone pass-through. 24" H x 14" W x 7" D (60 cm x 36 cm x 18 cm)

CA09A10090

NEW

CAN-AM FAMILY PICNIC COOLER SET

Picnic set with removable insulated cooler. Zippered front pocket secures: 2 plastic glasses, 2 melamine plates, 2 napkins, 1 corkscrew bottle opener, 1 cheese knife, 1 butter knife, 1 fork, 1 spoon, 1 cheese board. Adjustable and removable shoulder strap makes the set easy to take everywhere. All components are included in the set.

CA12A201900

CAN-AM LED FLASHLIGHT

Aluminum LED flashlight with strap. Includes 3 AAA batteries and 9 white LED lights. Laser engraved logo.

CA12A40400

NEW

CAN-AM DELUXE POKER SET

Includes 300 chips, 2 decks of cards and 5 dice. Aluminum carrying case.

CA12A40200

CAN-AM PARKING SIGN

Made of aluminum. Round corners and two holes for hanging. 12" X 18" (30 cm x 46 cm).

CA11A10010

NEW

CAN-AM CURVED STAINLESS STEEL TRAVEL MUG

Push-on lid with twist and lock opening. Double-wall stainless steel construction with plastic outer band. 16 oz (480 ml)

CA12A701900

NEW

CAN-AM ALUMINUM BOTTLE

Screw-on lid with matching carabiner. Food grade liner. Rubber bottom pad. 17 oz (510 ml).

CA12A20000

NEW

CAN-AM WATER BOTTLE

BPA-free water bottle. Made from a durable polyethylene terephthalate (PETG). High-impact resistant tapered body with self-attached, leak resistant tethered screw top. Silk screened logo. 18 oz (532 ml).

CA12A20100

NEW

CAN-AM COLOR LIGHT KEY CHAIN

Batteries included. Slide button turns on and off. Pad printed logo.

CA12A40300

Produit Autorisé Licensed Product

For additional information or to purchase these items, please contact your nearest BRP dealer.

FIERCE TRACTION. POTENT LOOK. THE ROUGHER THE TRAIL, THE SMOOTHER THE RIDE.

TIRES & RIMS

BRP rolls out a NEW LINEUP OF TIRES AND RIMS engineered to claw their way through mud, rock, ruts, sand – you name it.

Aggressive tread patterns for unbelievable traction and handling.

Raised lettering for bold appearance. Durable performance for a smooth ride.

ACCESSORY TIRE & RIM KITS

WHEN TRAILS BRING OUT THE ROUGH, THESE TIRES HANG TOUGH.

NEW

ALL TERRAIN KIT (4 TIRES & RIMS)*

Lockout 393 rims by Vision & Bighorn 2.0 Tires by Maxxis†.

Front rims 14” x 7” (36 cm x 18 cm)
Front tires 27” x 9” x 14” (69 cm x 23 cm x 36 cm)
Rear rims 14” x 8” (36 cm x 20 cm)
Rear tires 27” x 12” x 14” (69 cm x 30 cm x 36 cm)
715001691A | **$1,149.99**

NEW

MUD TERRAIN KIT (4 TIRES & RIMS)*

SS312 rims (Machined) & Mud Lite XTR tires by ITP†.

Front rims 14” x 6” (36 cm x 15 cm)
Front tires 27” x 9” x 14” (69 cm x 23 cm x 36 cm)
Rear rims 14” x 8” (36 cm x 20 cm)
Rear tires 27” x 11” x 14” (69 cm x 28 cm x 36 cm)
715001692A | **$1,349.99**

NEW

MUD TERRAIN KIT (4 TIRES & RIMS)*

Lockout 393 rims by Vision & Zilla tires by Maxxis.

Front rims 14” x 7” (36 cm x 18 cm)
Front tires 27” x 10” x 14” (69 cm x 25 cm x 36 cm)
Rear rims 14” x 8” (36 cm x 20 cm)
Rear tires 27” x 12” x 14” (69 cm x 30 cm x 36 cm)
715001693A | **$1,099.99**

NEW

SAND KIT (4 TIRES AND RIMS)*

Red Label rims and Doonz tires by Douglas.

Front rims 12” x 8” (30 cm x 20 cm)
Front tires 25.5” x 11” x 12” (65 cm x 28 cm x 30 cm)
Rear rims 12” x 10” (30 cm x 25 cm)
Rear tires 25.5” x 13” x 12” (65 cm x 33 cm x 30 cm)
715001637A | **$929.99**

* Consult your operator’s guide/owner’s manual for proper tire type and rim sizing. Improper tire and rim selection may affect vehicle handling. Check with your local authorities for proper regulation.

ACCESSORY TIRES & RIMS

NEW

MUD LITE XTR TIRE BY ITP*
For 14" (36 cm) rim. Sold individually.

Front
27" (69 cm) x 9" (23 cm) | 705401296 | **$234.99**

Rear
27" (69 cm) x 11" (28 cm) | 705501698 | **$257.99**

NEW

ZILLA TIRE BY MAXXIS*
For 14" (36 cm) rim. Sold individually.

Front
27" (69 cm) x 10" (25 cm) | 705401302 | **$174.99**

Rear
27" (69 cm) x 12" (30 cm) | 705501703 | **$189.99**

BIGHORN 2.0 TIRE BY MAXXIS*
For 14" (36 cm) rim. Sold individually.

Front
27" (69 cm) x 9" (23 cm) | 705400631 | **$194.99**

Rear
27" (69 cm) x 11" (28 cm) | 705500964 | **$204.99**

TIRE (FRONT AND REAR)*
AT30X9-14 Gorilla silverback mud tire. Sold individually.

Outlander X mr
30" (76 cm) x 14" (35 cm) | 705400962 | **$214.99**

NEW

SS312 RIMS BY ITP*
Black with clear coat. Sold individually. Matching cap (705401318), matching nuts (250100100).

Front
14" (36 cm) x 6" (15 cm) | 705401297 | **$104.99**

Rear
14" (36 cm) x 8" (20 cm) | 705501696 | **$114.99**

NEW

LOCKOUT 393 14" RIMS BY VISION**
Sold individually. Matching cap (705401362), matching nuts (250100100).

Front
14" (36 cm) x 7" (18 cm) | 705401363 | Black | **$94.99**

Rear
14" (36 cm) x 8" (20 cm) | 705501787 | Black | **$94.99**

NEW

RED LABEL BLACK RIMS BY DOUGLAS*

Front
12" (30 cm) x 8" (20 cm) | 715001635 | **$125.99**

Rear
12" (30 cm) x 10" (25 cm) | 715001702 | **$125.99**

OUTLANDER X mr RIM (ITP-SS212)*
Black with machining and clear coat rim. Matching cap (705400963), matching nuts (250100100). Sold individually.

Front & Rear 14" (36 cm) x 6" (15 cm) Outlander X mr | 705400877 | Black and machined | **$124.99**

NEW

DOONZ TIRE BY DOUGLAS*

Front
25.5" (65 cm) x 11" (28 cm) x 12" (30 cm) | 715001661 | **$97.99**

Rear
25.5" (65 cm) x 13" (33 cm) x 12" (30 cm) | 715001660 | **$119.99**

* Consult your operator's guide/owner's manual for proper tire type and rim sizing. Improper tire and rim selection may affect vehicle handling. Check with your local authorities for proper regulation.

OEM REPLACEMENT TIRES & RIMS

MODEL	ENGINE	PACKAGE	COLOR	FRONT TIRE	FRONT RIM	REAR TIRE	REAR RIM
COMMANDER	**1000, 800R**		All	705400781	705401217	705501129	7055011623
COMMANDER	**1000, 800R**	**XT**	Except Camo	705400631	705400632	705500964	705500965
COMMANDER	**1000, 800R**	**XT**	Camo	705400631	705400919	705500964	705501261
COMMANDER	**1000**	**X**	All	705400846	705400945	705501186	705501137
COMMANDER	**1000**	**DPS**	All	705400631	705400919	705500964	705500965
COMMANDER	**1000**	**LTD**	All	705400631	705401098	705500964	705501471
RENEGADE	**1000, 800R**		All	705400600	705401280	705500926	705501681
RENEGADE	**1000, 800R**	**X xc**	All	705400600	705401155	705500926	705501522
RENEGADE	**500**		All	705400600	705401280	705500926	705501681
OUTLANDER	**1000, 800R**	**XT**	Except Camo	705401333	705401078	705501769	705501458
OUTLANDER	**1000, 800R**	**XT**	Camo	705401333	705401275	705501769	705501675
OUTLANDER	**1000, 800R**	**XTP**	All	705401333	705401155	705501769	705501522
OUTLANDER	**1000, 800R**	**DPS**	All	705401331	705401268	705501767	705501669
OUTLANDER	**1000**	**X mr**	All	705400962	705401185	705400962	705401185
OUTLANDER	**800R**		All	705401331	705401371	705501767	705501802
OUTLANDER	**650, 500**		All	705401331	705401371	705501767	705501802
OUTLANDER	**650, 500**	**XT**	Except Camo	705401333	705401078	705501769	705501458
OUTLANDER	**650, 500**	**XT**	Camo	705401333	705401275	705501769	705501675
OUTLANDER	**650, 500**	**DPS**	All	705401331	705401268	705501767	705501669
OUTLANDER MAX	**1000, 800R**	**XT**	Except Camo	705401333	705401078	705501769	705501458
OUTLANDER MAX	**1000, 800R**	**XT**	Camo	705401333	705401275	705501769	705501675
OUTLANDER MAX	**1000, 800R**	**XTP**	All	705401333	705401155	705501769	705501522
OUTLANDER MAX	**1000, 800R**	**DPS**	All	705401331	705401268	705501767	705501669
OUTLANDER MAX	**1000**	**LTD**	All	705401333	705401078	705501769	705501458
OUTLANDER MAX	**650, 500**		All	705401331	705401371	705501767	705501802
OUTLANDER MAX	**650, 500**	**XT**	Except Camo	705401333	705401078	705501769	705501458
OUTLANDER MAX	**650, 500**	**XT**	Camo	705401333	705401275	705501769	705501675
OUTLANDER MAX	**650, 500**	**DPS**	All	705401331	705401268	705501767	705501669
OUTLANDER & OUTLANDER MAX	**400**		All	705400009	705401199	705500385	705501607
OUTLANDER & OUTLANDER MAX	**400**	**XT**	All	705400606	705400648	705500933	705500986
DS	**450**	**X mx**	All	705400765	705400656	705501106	705500995
DS	**250**		All	S44710RCA000	S44650RCA000	S42710RCA000	S42650RCA000
MINI DS	**90 (4-St)**	**X**	All	V42711DGF000LL	V42701DGF01HLL	V42712DGF01H	V42702DGF02HLL
MINI DS	**90 (4-St), 70 (4-St)**		All	V42711DGF000LL	V42707DGF010LL	V42712DGF010LL	V40706DGF010LL

705400962

705400631

705400600

S44710RCA000

OEM RIMS

RENEGADE & OUTLANDER

XT-P RIMS
Made of aluminum. Upgrade for non XT package.

Renegade & Outlander 2012 and prior with 650 or 800R engine (except 2006 with 800R engine & 2012 with 800R or 1000 engine)
Front
12" x 6" (30 cm x 15 cm) | 705400687 | **$124.99**
Rear
12" x 7.5" (30 cm x 19 cm) | 705501019 | **$139.99**

LIMITED RIMS
Made of aluminum. Upgrade for non XT package.

Renegade & Outlander 2012 and prior with 650 or 800R engine (except 2006 with 800R engine & 2012 with 800R or 1000 engine)
Front
12" x 6" (30 cm x 15 cm) | 705400683 | **$124.99**
Rear
12" x 7.5" (30 cm x 19 cm) | 705501015 | **$139.99**

XT RIMS
Made of aluminum. Upgrade for non XT package.

Renegade & Outlander 2012 and prior with 650 or 800R engine (except 2006 with 800R engine & 2012 with 800R or 1000 engine)
Front
12" x 6" (30 cm x 15 cm) | 705400648 | **$119.99**
Rear
12" x 7.5" (30 cm x 19 cm) | 705500986 | **$129.99**

Note: Matching Nuts - 250100100 Black and 250100082 Chrome — Matching Cap - 705400680 Black

RENEGADE RIMS
Center cast aluminum rims.

Renegade & Outlander 2012 and prior with 650 or 800R engine (except 2006 with 800R engine & 2012 with 800R or 1000 engine)
Front
12" x 6" (30 cm x 15 cm) | 705400506 | **$119.99**
Rear
12" x 7.5" (30 cm x 19 cm) | 705500837 | **$129.99**

BEST SELLER

XTR CUSTOM RIM KIT
Custom Can-Am XTR branded 12" (30.5 cm) painted aluminum rims. Includes matching chrome nuts and center covers. Set of 4. Front rim: 12" x 6" (30 cm x 15 cm). Rear rim: 12" x 8" (30 cm x 20 cm).

Renegade & Outlander2012 and prior with 650 or 800R engine (except 2006 with 800R engine) | 715000611 | Black | **$504.99**

COLORED FINS FOR RIMS
Plastic fins that enhance appearance of your vehicle. Pack of 8.

Fit on following rims: XT, XT-P and Limited 2010 & 2011 (705500986, 705501015, 705501019, 705400687, 705400648, 705400683)
705400681 | Yellow
705400950 | Steel Gray
$1.99

RENEGADE, OUTLANDER & COMMANDER

RENEGADE X RIMS
Center cast aluminum rims. Welded exterior and interior reinforcement rings. Needs to be installed with Beadlock (705400841).

Renegade & Outlander 2012 and prior with 650 or 800R engine (except 2006 800R & 2012 with 800R or 1000 engine)
Commander 2011 and up
***Front* 12" x 6" (30 cm x 15 cm)**
705400945 | **$124.99**
***Rear* 12" x 7.5" (30 cm x 19 cm)**
705501137 | **$139.99**

X BEADLOCK
Cast aluminum. Must be installed on rims 705400945 and 705501137. Needs 16 bolts (250000435) for installing the Beadlock Disk.

Renegade & Outlander 2012 and prior with 650 or 800R engine (except 2006 800R & 2012 with 800R or 1000 engine)
Commander 2011 and up
705400841 | Yellow | **$79.99**

COMMANDER

LIMITED 14" (36 CM) RIMS
Premium cast aluminum rim. Black with machined face. Sold individually. Standard on Limited model.

Commander 2011 and up (all models)
Front
14" x 7" (36 cm x 18 cm) | 705401098 | Silver/Black | **$124.99**
Rear
14" x 8.5" (36 cm x 22 cm) | 705501471 | Silver/Black | **$139.99**

XT 14" (36 CM) RIMS
Premium cast aluminum rim. Sold individually. Standard on XT package.

Commander 2011 and up (all models)
***Front* 14" x 7" (36 cm x 18 cm)** |
705400632 | Silver with clear coat | **$124.99**
***Rear* 14" x 8.5" (36 cm x 22 cm)** |
705500965 | Silver with clear coat | **$139.99**

Premium cast aluminum rim with durable black finish. Sold individually. Standard on XT Camo models.

Commander 2011 and up (all models)
***Front* 14" x 7" (36 cm x 18 cm)** |
705400919 | Black | **$124.99**
***Rear* 14" x 8.5" (36 cm x 22 cm)** |
705501261 | Black | **$139.99**

OEM RIMS

RENEGADE & OUTLANDER

RENEGADE X xc RIMS

Black with clear coat aluminum rims. Must be installed with Yellow Beadlock (705401156).

Renegade & Outlander 2012 with 800R or 1000 engine
Outlander, Outlander MAX & Renegade 2013
Front
12" x 6" (30 cm x 15 cm) | 705401155 | Black and Yellow Beadlock | **$279.99**
Rear
12" x 7.5" (30 cm x 19 cm) | 705501522 | Black and Yellow Beadlock | **$279.99**

BEADLOCK

Cast aluminum Beadlock. Must be installed on Front Rim (705401155) and Rear Rim (705501522).

Renegade & Outlander 2012 with 800R or 1000 engine
Outlander, Outlander MAX & Renegade 2013 | 705401156 | Yellow | **$104.99**

OUTLANDER XT RIMS

Black with machining and clear coat aluminum rims.

Renegade & Outlander 2012 with 800R or 1000 engine
Outlander, Outlander MAX & Renegade 2013
Front
12" x 6" (30 cm x 15 cm) | 705401078 | Black with machining and clear coat | **$139.99**
Rear
12" x 7.5" (30 cm x 19 cm) | 705501458 | Black with machining and clear coat | **$149.99**

OUTLANDER RIMS

Silver with clear coat aluminum rims.

Renegade & Outlander 2012 with 800R or 1000 engine
Outlander, Outlander MAX & Renegade 2013
Front
12" x 6" (30 cm x 15 cm) | 705401088 | Silver and Clear coat | **$139.99**
Rear
12" x 7.5" (30 cm x 19 cm) | 705501460 | Silver and Clear coat | **$149.99**

RENEGADE RIMS

Black with clear coat aluminum rims.

Renegade & Outlander 2012 with 800R or 1000 engine
Outlander, Outlander MAX & Renegade 2013
Front
12" x 6" (30 cm x 15 cm) | 705401091 | Black and clear coat | **$139.99**
Rear
12" x 7.5" (30 cm x 19 cm) | 705501465 | Black and clear coat | **$149.99**

OUTLANDER RIMS (CAMO MODEL)

Black with clear coat aluminum rims.

Renegade & Outlander 2012 with 800R or 1000 engine
Outlander, Outlander MAX & Renegade 2013
Front
12" x 6" (30 cm x 15 cm) | 705401127 | Black and clear coat | **$139.99**
Rear
12" x 7.5" (30 cm x 19 cm) | 705501493 | Black and clear coat | **$149.99**

Note: Matching Nuts - 250100100 (except 250100082 for Outlander Rims (705401088 & 705501460)) — Matching Cap - 705400928

DS 450

X mx RIM KIT

ITP T-9 Trac-Lock rims with Beadlock and inside reinforcement. Sold in pairs.

DS 450
Front
10" x 5" (25 cm x 13 cm) | 715000903 | **$219.99**
Rear
8" x 8" (20 cm x 20 cm) | 715000906 | **$399.99**

X xc RIM KIT

ITP T-9 Trac-Lock rims. Sold in pairs.

DS 450
Front
10" x 5" (25 cm x 13 cm) | 715000902 | **$464.99**
Rear
9" x 8" (23 cm x 20 cm) | 715000905 | **$479.99**

X PACKAGE REINFORCED RIM KIT

Black painted aluminum rims with exterior reinforcement ring. Sold in sets of 4. Beadlock with inside reinforcement.

DS 450 | 715000510 | **$374.99**

can-am

OILS & MAINTENANCE

5 ESSENTIAL BRP PRODUCTS TO ENSURE A PROPER TUNE-UP

MAKE THE RIGHT CHOICE

BRP's commitment to quality means that every vehicle is engineered to the highest standards of reliability. Nevertheless, a lack of proper maintenance can cause even the best components to fail eventually.

By using original BRP maintenance parts, you are taking care of your investment.

1 AIR PREFILTER
PAGE 61

2 OIL FILTER
PAGE 116

3 BRAKE PAD KIT
PAGE 116

4 PERFORMANCE DRIVE BELT
PAGE 116

5 XPS SYNTHETIC GEAR OIL
PAGE 119

RECOMMENDED PERIODIC MAINTENANCE SCHEDULE

Going to your BRP dealership for regular maintenance servicing can prevent bigger and more expensive repairs in the long run. Just follow the recommended maintenance schedule. It was designed by experts who understand your ATV / SSV and know exactly how to keep it in top form.

TO DO:	475 mi or 25 h	625 mi or 50 h	1875 mi or 100 h	3725 mi or 200 h
Clean the CVT air inlet/outlet	✓			
Inspect and clean the CVT air filter	✓			
Inspect the brake system and pads	✓		✓	
Tighten the wheel lug nuts	✓			
Inspect the drive shaft boots and protectors	✓			
Inspect passenger grab handles condition	✓			
Inspect hitch condition	✓			
Inspect driver & passenger seat latch operation	✓			
Inspect tailgates latch operation	✓			
Replace air filter		✓		
Verify battery condition		✓		
Inspect front differential/rear final drive oil level		✓		
Inspect drive shaft joints condition		✓		
Inspect front/rear propeller shaft joint condition		✓		
Inspect tie rod ends		✓		
Inspect shock absorbers for leaks		✓		
Lubricate shock absorber spherical bearings (X model)		✓		
Inspect and lubricate front suspensions arms		✓		
Inspect seat belts			✓	
Inspect side nets			✓	
Replace the engine oil and filter			✓	
Inspect and adjust the valve clearance			✓	
Inspect and clean the muffler spark arrester			✓	
Check engine coolant strength			✓	
Inspect throttle body			✓	
Clean the fuel pump pre-filter			✓	
Inspect the fuel pump pressure			✓	
Replace fuel vent breather filter			✓	
Inspect the drive belt			✓	
Inspect, clean and lubricate the drive and driven pulleys (including the one-way bearing)			✓	
Inspect the gearbox oil level and condition			✓	
Inspect wheel bearings			✓	
Inspect the steering system (column, bearing, etc.)			✓	
Inspect and clean the brake system			✓	
Inspect frame for any damage			✓	
Replace rear final drive oil			✓	
Replace engine coolant				✓
Verify cooling system				✓
Verify fuel system				✓
Replace Spark plugs				✓
Replace front differential oil				✓
Replace gearbox oil				✓
Clean the vehicle speed sensor				✓
Replace the brake fluid				✓

TAKE CARE OF YOUR VEHICLE by maintaining it using strictly BRP and Rotax OEM or 100% Can-Am-approved parts and products. You bought the best vehicle available on the market. It deserves the best maintenance products in the world.

OILS & MAINTENANCE
PARTS & ACCESSORIES

PERFORMANCE DRIVE BELT
High-performance drive belts calibrated to maximize your off-road performance. Ask your Authorized Can-Am Dealer which one fits your vehicle.

715000302 | **$129.99**
715900024 | **$39.99**
715900023 | **$134.99**

NEW

PERFORMANCE DRIVE BELT
(Not illustrated)
For the Xmr intense riders, a 100% PBO material which is the most advanced compound to date for high-performance drive belts. Extremely durable under high temperatures. See your dealer for details.

715900212

BRAKE PAD KIT
One-stop replacement brake pad kit designed to replace the parts while keeping your vehicle's performance intact. Ask your Authorized Can-Am Dealer which one fits your vehicle.

Outlander
Front Left | 705600349
Front Right | 705600350
$39.99

OIL FILTER
Use on all Can-Am Off-road vehicles. Ask your authorized Can-Am dealer which one fits your vehicle.

420256188 | **$14.99**

NGK® SPARK PLUGS
BRP dealers carry the full line of premium NGK spark plugs for Can-Am ATVs.

(DCPR8E - 0.8 mm gap)
707000246 | **$3.99**

YUASA BATTERIES
Top of the line models from the leading preferred original equipment battery supplier in North America.

18 Amps. Wet (YTX20L-BS) | 410301203 | **$105.99**
19 Amps. Dry (YB16CL-B) | 278001756 | **$70.99**
13 Amps. Wet (YTX15L-BS) | 710000283 | **$109.99**
Dry (YB30CLB) | 278001882 | **$122.99**
3 Amps. Wet (YT4L-BS) | 410301204 | **$39.99**

YUASA® SMART SHOT AUTOMATIC BATTERY CHARGER
The Yuasa Smart Shot automatic battery chargers are available in 900 milliamp and 1.5 amp charge capacities and ensure that optimum power is available from your battery when you need it. Both chargers are supplied with a fused-ring connector, in addition to the alligator clips that can be attached permanently to your battery, making charging and maintaining your battery a snap.

900 Automatic 12V 900MA | 529035773 | **$41.99**
Automatic 6/12V 1.5 amps. 5 Stage | 529035772 | **$62.99**

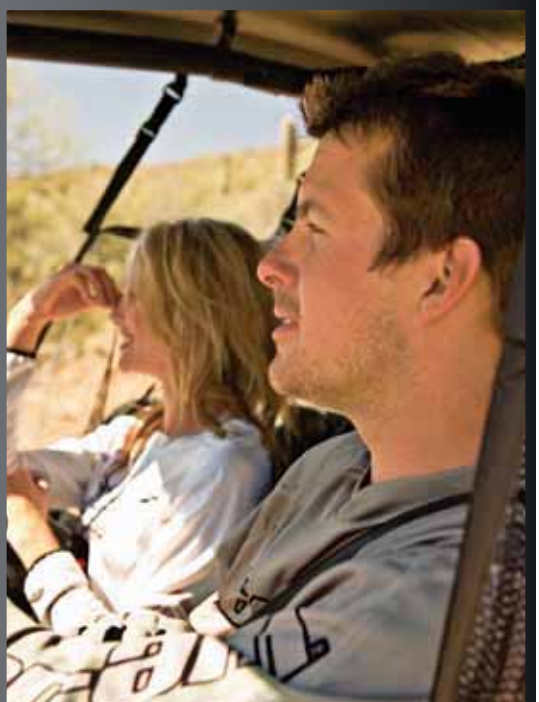

XPS CLEANERS

XPS FINISHING SPRAY

The final touch to your detailing job. Uses an advanced silicone product. Melon-scented spray quickly treats faded plastics, vinyl, rubber and more to restore their original look. Long lasting, it helps keep mud and dirt from sticking to your vehicle's finish and does not leave streaks or spots. Contains no ozone depleters and no chlorinated solvents. 12 oz. / 340 g.

219701704 | **$8.99**

XPS BRAKES & PARTS CLEANER

A concentrated blend of solvents with a powerful blasting spray that effectively removes grease, grime, brake fluid and other contaminants from brake components and metal parts without the need for disassembly. Evaporates instantly and completely, leaving no residue to hinder performance. Contains no ozone depleters. 14 oz. / 397 g.

219701705 | **$7.99**

XPS OFF-ROAD VEHICLE WASH

A biodegradable and non-toxic cleaner that removes mud and dried-on dirt from your off-road vehicle. Whether grimy from the track, the woods or the fields, this cleaner will leave your off-road vehicle sparkling. When used as directed, XPS Wash is safe for all off-road vehicles finishes. 32 oz. / 946 ml.

219701702 | **$9.99**

XPS MICROFIBER TOWELS

The latest in high-quality detailing towels. Made up of extremely fine fibers, their soft surfaces have been perfected for drying and polishing motorcycles, boats, cars or any shiny finish. They are so absorbent they hold up to seven times their weight in water. Machine washable means they can be used over and over again. Pack of 2.

219701759 | **$8.99**

XPS CLEANING KIT

Kit includes: XPS off-road vehicle Wash, XPS Finishing Spray and XPS Microfiber Towels.

219701713 | **$24.99**

XPS ENGINE OILS

XPS 4-STROKE SYNTHETIC OIL - ALL CLIMATE GRADE

Unlike other ordinary 4-stroke motor oils, XPS all climate grade synthetic 4-stroke oil is specifically engineered to meet the particular lubrication requirements of the Can-Am off-road vehicles equipped with Rotax 4-stroke engines. Provides easier starting in very cold temperatutes.

1 US gallon / 3.785 L	1 quart / 946 ml
293600115	293600112

XPS 4-STROKE SYNTHETIC BLEND OIL - SUMMER GRADE

BRP 4-stroke engines are high output, used in the most demanding conditions, and used aggressively they need a specialized oil to handle these demands!

1 US gallon / 3.785 L	1 quart / 946 ml
293600122	293600121

XPS 4-STROKE OIL CHANGE KIT

Kit includes: 3 quarts of XPS synthetic blend oil, oil filter, o-ring and instruction sheet. For Renegade, Outlander & Commander.

Summer use	All climate
703500736	703500735

FLEXIBLE SPOUT

To use your 1 quart / 946 ml, 1 U.S. gallon / 3.785 L oil bottles for spill-free pouring. Easy installation.

414837300 | **$6.99**

Note: Please contact your nearest dealer for suggested retail prices of oil based products.

XPS MAINTENANCE PRODUCTS

XPS OFF-ROAD VEHICLE HPG-T/A GAS SHOCK OIL

Recommended for all top quality gas shocks for off-road vehicles including our own Can-Am HPG-T/A nitrogen gas charged shocks. High viscosity index for extreme temperatures encountered in off-road vehicle conditions.

293600136 | **$73.99**

XPS SYNTHETIC GEAR OIL

Brings forward the latest innovations of lubricant technology. Provides optimal protection under severe conditions while allowing durability that far exceeds other synthetic and conventional API GL-5 gear oils. Offers added assurance during extended drain intervals. Allows higher load capacity when compared to petroleum lubricants. Its tremendous thermal stability and relatively constant viscosity give exceptional wear protection and superior performance at extreme temperatures. Strongly recommended for use in all Can-Am off-road vehicles requiring API GL-5 gear oil.

For SSV 75W-140
293600140 | **$32.17**
For ATV 75W-90
293600043 | **$22.99**

XPS SYNTHETIC SUSPENSION GREASE

Specially designed for Can-Am off-road vehicle suspensions. Offers optimal lubrication at low and high temperature while protecting critical suspension components from dirt and other contaminants. 400 g.

293550033 | **$9.99**

XPS STORAGE OIL

This specialty oil is a must when putting your Can-Am off-road vehicle away for extended periods. Specially formulated to protect the engine's internal parts from the hazards of rust and corrosion due to condensation during storage or prolonged periods of non-use. 350 g.

413711900 | **$9.99**

XPS LUBE

A multipurpose lubricant that prevents rust, corrosion and moisture intrusion. Contains active extreme-pressure additives which provide excellent lubrication and antiwear properties. Comes in a spray can that works upside down. 14 oz.

293600016 | **$11.99**

PRE-MIXED ANTIFREEZE/ COOLANT

Pre-mixed ready to top up your coolant level. Blended to perform best in our Rotax engines with anti-corrosive additive.

219700362 | **$8.99**

XPS FUEL STABILIZER

Fuel additive to protect against fuel contamination and residue build-up in carburetors and gas lines. Should always be used before storing your Can-Am off-road vehicle. Suitable for all gasoline engines.

413408601 | **$9.99**

XPS DOT 4 BRAKE FLUID

Exceeds DOT 3 and 4 requirements. Unique low-moisture formulation providing maximum protection against vapor lock. Recommended in Ski-Doo snowmobiles and Can-Am off-road vehicles.

293600131 | **$9.99**

The illustrations figuring in this parts catalog show typical construction of the different assemblies and, in all cases, may not reproduce the full detail or exact shape of the parts shown. However, they represent parts which have the same or similar function.

Les illustrations contenues dans ce catalogue indiquent la disposition des pièces les unes par rapport aux autres. Il est donc possible qu'elles ne rendent pas compte de la forme exacte de ces pièces ainsi que de leurs détails de fabrication. Ces illustrations ont pour but d'identifier des pièces qui remplissent la même fonction ou une fonction identique.

SYMBOLS USED IN THIS CATALOG

@	In «Quantity» column means «Use as Required».
Opt	In «Quantity» column means «Optional».
XXX	Parts marked with «XXX» are not available as spare parts.

SYMBOLES UTILISÉS DANS CE CATALOGUE

@	Dans la colonne «Quantité» signifie «Au besoin».
Opt	Dans la colonne «Quantité» signifie «En option».
XXX	Les articles marqués d'un «XXX» ne sont pas disponibles comme pièces de remplacement.

Part List

COMMANDER 2013 STD, DPS, XT, 800R EFI / Model Numbers

ITEM	PART NUMBER	PART NAME	QUANTITY	REMARKS
1	6CDA	Commander, 4X4 STD, Red		North America 800 EFI
2	6CDB	Commander, 4X4 STD, Red		International 800 EFI
3	6CDC	Commander, 4X4 STD, Red		Europe 800 EFI
4	6DDA	Commander, 4X4 XT, Yellow		North America 800 EFI
5	6DDB	Commander, 4X4 XT, Magnesium		North America 800 EFI
6	6DDC	Commander, 4X4 XT, Camo		North America 800 EFI
7	6TDA	Commander, 4X4 DPS, Yellow		North America 800 EFI

COMMANDER 2013 STD, DPS, XT, 800R EFI / Cooling System

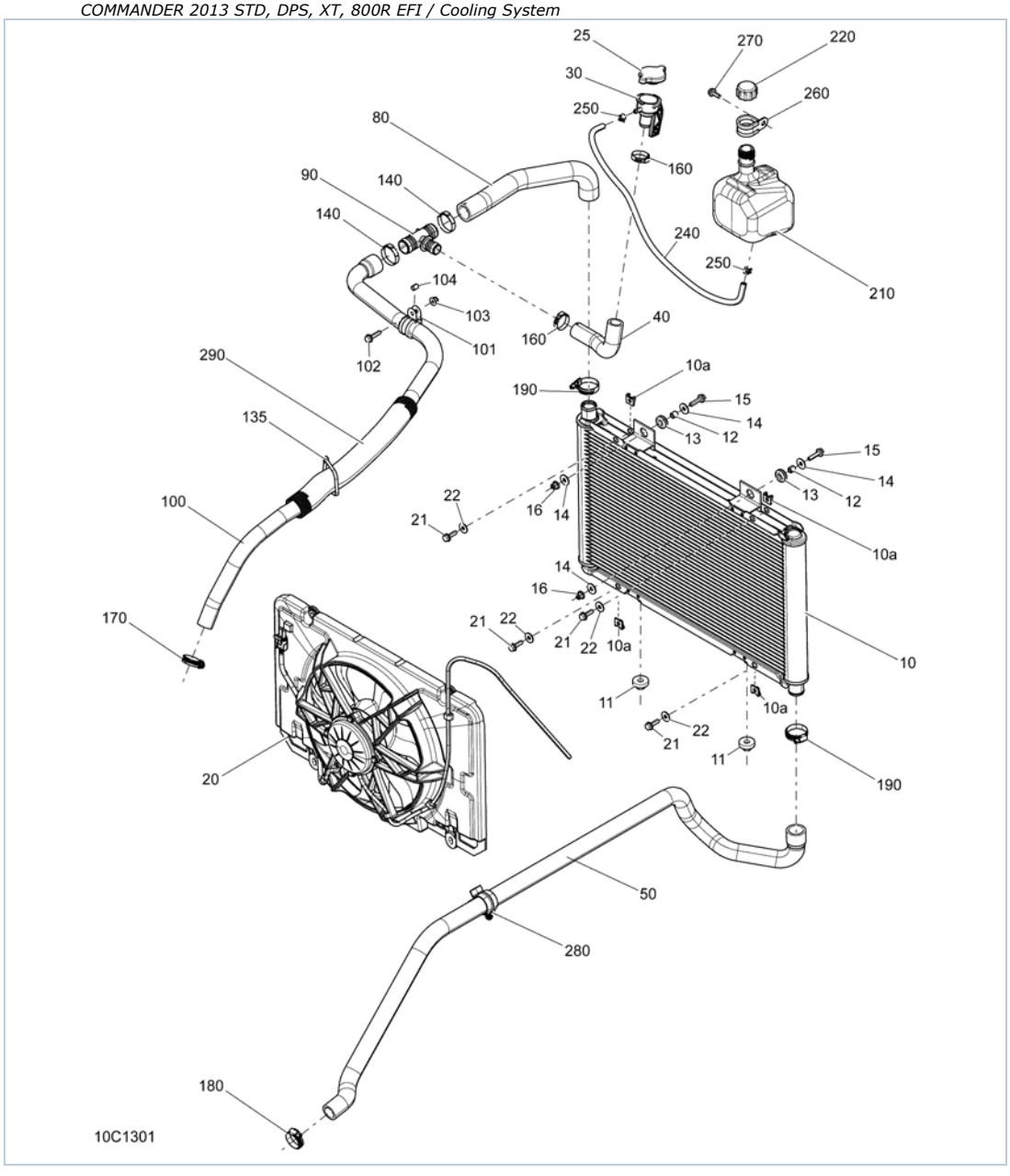

Part List

COMMANDER 2013 STD, DPS, XT, 800R EFI / Cooling System

ITEM	PART NUMBER	PART NAME	QUANTITY	REMARKS
10	709200395	Radiator	1	Includes 10 to 10a
10a	715900148	Clip Nut M6 X 1	4	
11	709200285	Grommet	2	
12	293900105	Bushing	2	
13	293720053	Grommet	2	
14	250200082	Flat Washer	4	
15	207662534	Hex. Flanged Screw	2	
16	233261434	Flanged Elastic Nut M6	2	
20	709200375	Fan Ass'y	1	
21	207662044	Hex. Flanged Screw M6 X 20	4	
22	234062410	Flat Washer 6 mm	4	
25	709200207	Pressure Cap	1	
30	709200179	FILLER NECK	1	
40	709200264	FILLER NECK HOSE	1	
50	709200355	Radiator Inlet Hose	1	
80	709200265	Radiator Outlet Hose	1	
90	509000372	T-Fitting	1	
100	709200295	Intermediate Hose	1	
101	709200036	HOSE ANCHOR	1	
102	207662534	Hex. Flanged Screw	1	
103	233261434	Flanged Elastic Nut M6	1	
104	707000065	Spacer	1	
135	293750008	Tie-Rap 350 mm	1	
140	509000162	Gear Clamp	2	
160	293650099	Oetiker Gear Clamp	2	
170	293650098	Norma Gear Clamp	1	
180	293650098	Norma Gear Clamp	1	
190	293650098	Norma Gear Clamp	2	
210	709200312	Coolant Tank	1	
220	709200328	Tank Cap	1	
240	415110000	Polyurethane Hose 5.2 mm	1	
250	414554800	Spring Clamp	2	
260	709200036	HOSE ANCHOR	1	
270	207661644	Hex. Flanged Screw M6 X 16	1	
280	275500590	Retainer	1	
290	515176260	Tubing 35mm	1	

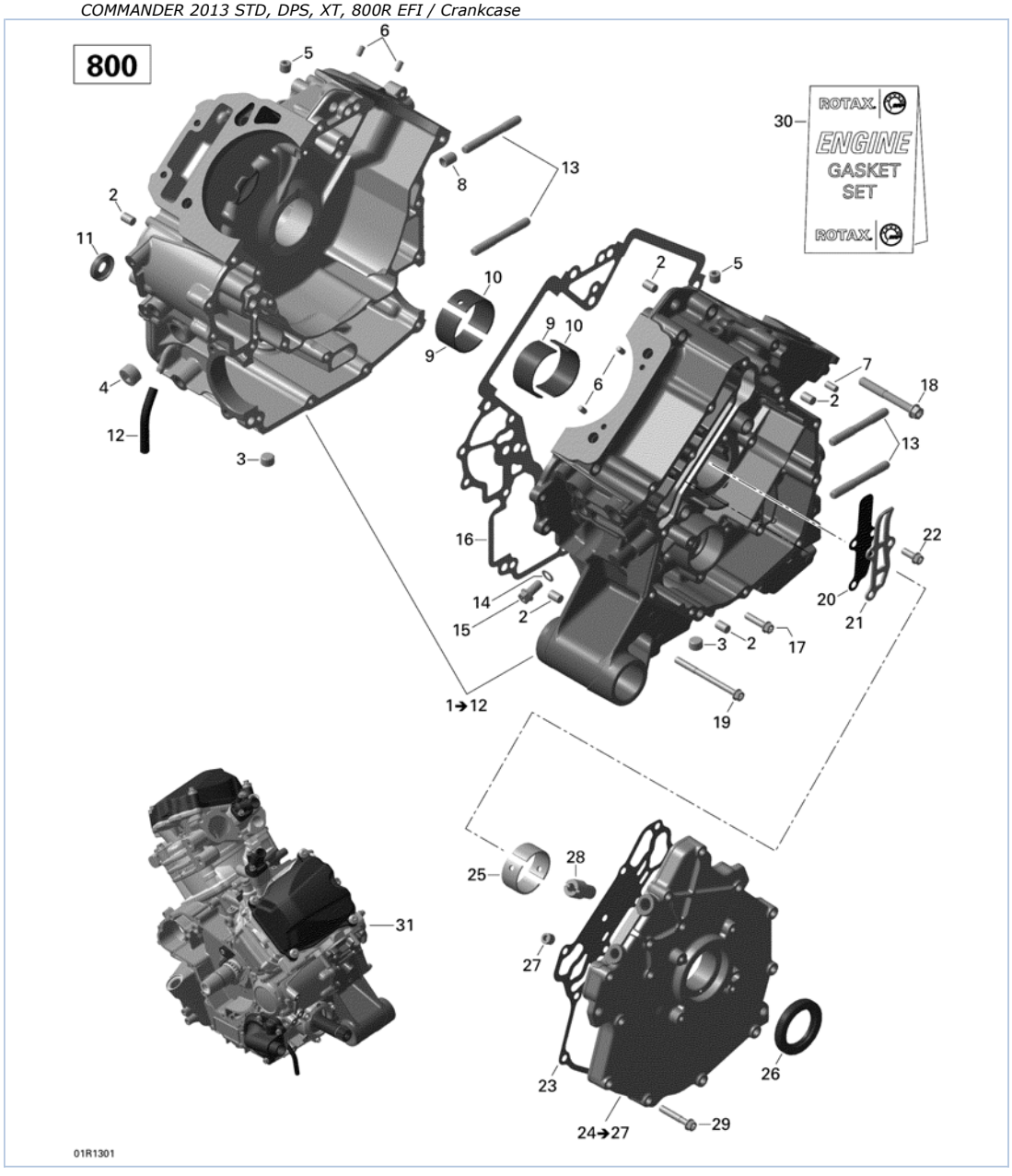
800
ROTAX
ENGINE
GASKET
SET
ROTAX
1➔12
24➔27
01R1301

Part List

COMMANDER 2013 STD, DPS, XT, 800R EFI / Crankcase

ITEM	PART NUMBER	PART NAME	QUANTITY	REMARKS
1	420685253	Crankcase Ass'y	1	Includes 1 to 12
2	420632010	Center Pin 8 X 12	5	
3	420840657	Plug Screw M12 X 1.5	2	
4	420240170	Plug Screw M18 X 1.5	1	
5	420641323	Plug Screw M10 X 1	2	
6	420929650	Drive Pin 5 X 10	4	
7	420932780	Needle Pin	1	
8	420929670	Dowel Pin 10 X 13	1	
9	420233960	Plain Bearing	2	
10	420233965	Plain Bearing	2	
11	420650310	Oil Seal	1	
12	415110000	Polyurethane Hose 5.2 mm	1	
13	420240814	Stud	4	
14	420950141	Sealing Ring	1	
15	420440852	Flanged Torx Screw M8 X 16	1	
16	420651225	Gasket	1	
17	420641238	Flanged Torx Screw M6 X 25	2	
18	420440402	Flanged Torx Screw M8 X 65	4	
19	420440657	Flanged Torx Screw M6 X 75	13	
20	420224720	Valve Plate	1	
21	420224725	Reed Valve Stop	1	
22	420641048	Flanged Torx Screw M6 X 16	3	
23	420651211	Gasket	1	
24	420612128	PTO Cover Ass'y	1	Includes 24 to 27
25	420233997	Bearing Sleeve	2	
26	420631932	Oil Seal	1	
27	420641323	Plug Screw M10 X 1	1	
28	420256334	Hose Nipple M12 X 1.5	1	
29	420641258	Flanged Torx Screw M6 X 35	14	
30	420684155	Gasket Kit, Engine	1	
31	420081020	Long Block, 800	1	

800

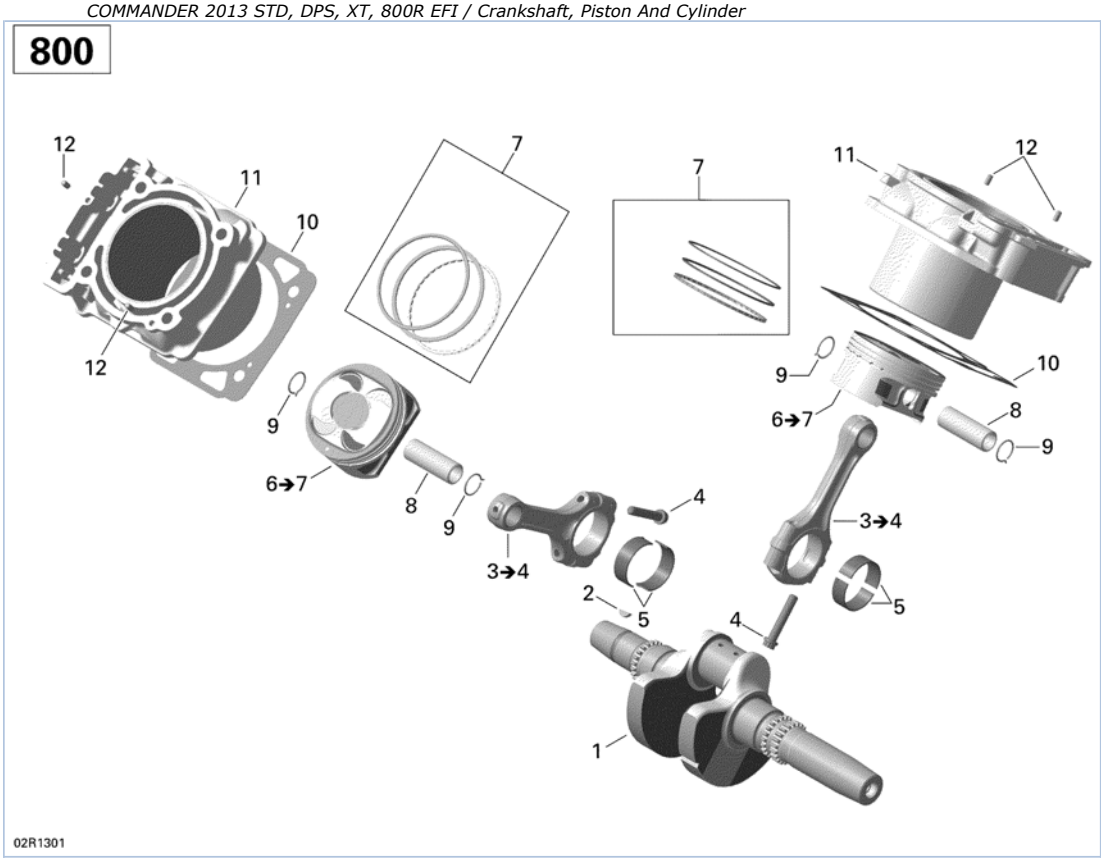

Part List

COMMANDER 2013 STD, DPS, XT, 800R EFI / Crankshaft, Piston And Cylinder

ITEM	PART NUMBER	PART NAME	QUANTITY	REMARKS
1	420219745	Crankshaft	1	
2	420246570	Woodruff Key 4 X 5	1	
3	420217429	Connecting Rod Ass'y	2	Includes 3 to 4
4	420641640	Connecting Rod Screw M8 X 1	2	
5	420233980	Plain Bearing 40 X 43 X 15	4	
6	420296775	Piston Ass'y, 90.958 mm	2	Includes 6 to 7
6	420296776	Piston Ass'y, Oversize, 91.208 mm	2	Includes 6 to 7
7	420296774	Piston Ring Set	1	
8	420216270	Piston Pin	2	
9	420845109	Piston Circlip	4	
10	420630210	Gasket	2	
11	420613584	Cylinder With Sleeve	2	
12	420929650	Drive Pin 5 X 10	4	

800

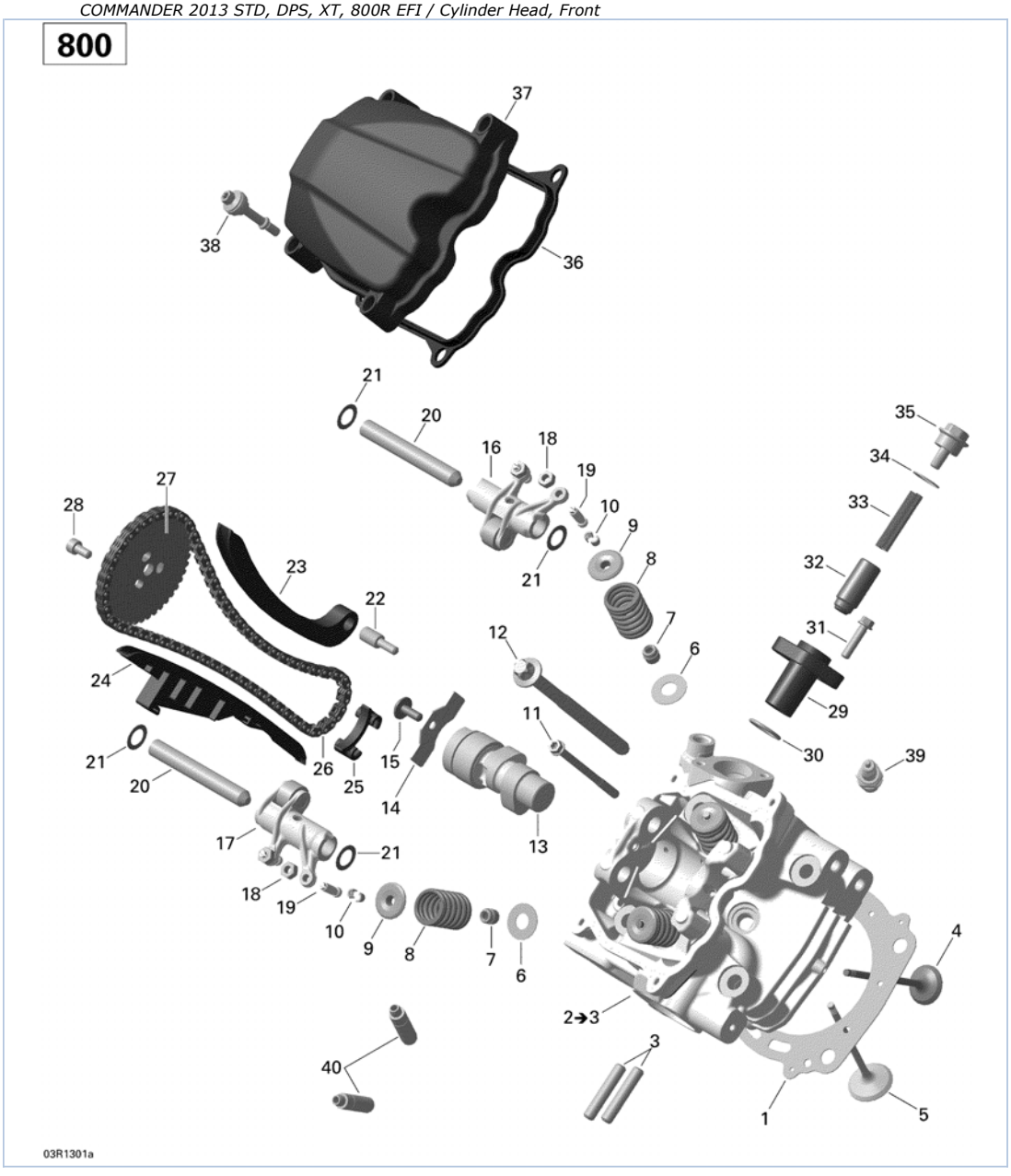
37
38
36
21
20
16
18
19
10
9
8
7
6
21
35
34
33
32
31
29
30
39
28
27
23
22
24
12
11
21
20
26
25
15
14
13
17
21
18
19
10
9
8
7
6
2➔3
3
40
1
5
4
03R1301a

Part List

COMMANDER 2013 STD, DPS, XT, 800R EFI / Cylinder Head, Front

ITEM	PART NUMBER	PART NAME	QUANTITY	REMARKS
1	420630195	Cylinder Head Gasket	1	
2	420623941	Cylinder Front Ass'y	1	Includes 2 to 3
3	420941014	Stud M8 x 26	2	
4	420254361	Exhaust Valve, 27 mm	2	
5	420254351	Intake Valve, 31 mm	2	
6	420627770	Thrust Washer	4	
7	420230515	Valve Stem Seal	4	
8	420239295	Valve Spring	4	
9	420254132	Valve Spring Retainer	4	
10	420254120	Cotter Valve	8	
11	420641228	Flanged Torx Screw M6 X 85	2	
12	420641550	Torx Screw M10 X 140	4	
13	420620026	Camshaft	1	
14	420627743	Holding Strip	1	
15	420241525	Torx Screw M6 X 16	1	
16	420254905	Rocker Arm Inlet	1	
17	420254915	Rocker Arm Exhaust	1	
18	420242910	Hex. Nut M6	4	
19	420241335	Adjustment Screw M6 X 0.75	4	
20	420229712	Pin #12, Small, M6 X 90	2	
21	420944382	Shim	4	
22	420240941	Bearing Screw M6	1	
23	420436015	Chain Tension Guide	1	
24	420236582	Chain Guide	1	
25	420236350	Chain Guide	1	
26	420297062	Silent Chain	1	
27	420254435	Camshaft Sprocket, 42 Teeth	1	
28	420840031	Screw M6 X 12	3	
29	420236510	Chain Tensioner Housing	1	
30	420430370	O-Ring	1	
31	420641238	Flanged Torx Screw M6 X 25	2	
32	420236520	Chain Tensioner Plunger	1	
33	420238120	Spring	1	
34	420250890	O-Ring	1	
35	420641150	Plug Screw	1	
36	420630260	Gasket	1	
37	420610395	Valve Cover	1	
38	420440560	Torx Screw M6 X 30.5	4	
39	707000246	Spark Plug, NGK DCP-R8E	1	
40	420254374	Valve Guide	4	

800

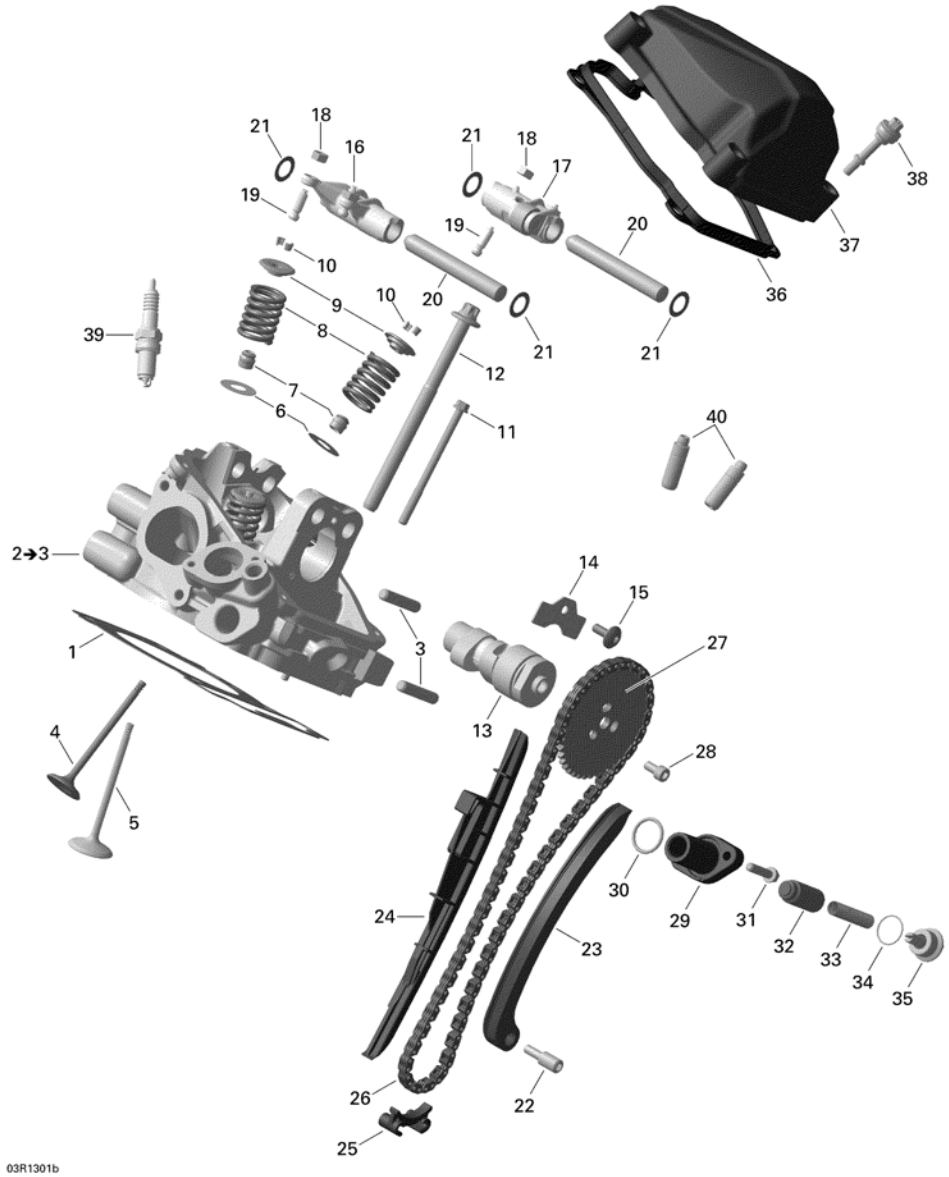
21
18
16
19
10
9
8
7
6
39
10
20
12
11
2➔3
1
3
4
5
21
18
17
19
20
21
36
37
38
40
14
15
27
28
13
24
23
22
26
25
30
29
31
32
33
34
35
03R1301b

Part List

COMMANDER 2013 STD, DPS, XT, 800R EFI / Cylinder Head, Rear

ITEM	PART NUMBER	PART NAME	QUANTITY	REMARKS
1	420630195	Cylinder Head Gasket	1	
2	420613532	Cylinder Head Ass'Y	1	Includes 2 to 3
3	420941014	Stud M8 x 26	2	
4	420254361	Exhaust Valve, 27 mm	2	
5	420254351	Intake Valve, 31 mm	2	
6	420627770	Thrust Washer	4	
7	420230515	Valve Stem Seal	4	
8	420239295	Valve Spring	4	
9	420254132	Valve Spring Retainer	4	
10	420254120	Cotter Valve	8	
11	420641228	Flanged Torx Screw M6 X 85	2	
12	420641550	Torx Screw M10 X 140	4	
13	420620028	Camshaft	1	
14	420627743	Holding Strip	1	
15	420241525	Torx Screw M6 X 16	1	
16	420254905	Rocker Arm Inlet	1	
17	420254915	Rocker Arm Exhaust	1	
18	420242910	Hex. Nut M6	4	
19	420241335	Adjustment Screw M6 X 0.75	4	
20	420229712	Pin #12, Small, M6 X 90	2	
21	420944382	Shim	4	
22	420240941	Bearing Screw M6	1	
23	420436015	Chain Tension Guide	1	
24	420236582	Chain Guide	1	
25	420236350	Chain Guide	1	
26	420297062	Silent Chain	1	
27	420254435	Camshaft Sprocket, 42 Teeth	1	
28	420840031	Screw M6 X 12	3	
29	420236510	Chain Tensioner Housing	1	
30	420430370	O-Ring	1	
31	420641238	Flanged Torx Screw M6 X 25	2	
32	420236520	Chain Tensioner Plunger	1	
33	420238120	Spring	1	
34	420250890	O-Ring	1	
35	420641150	Plug Screw	1	
36	420630260	Gasket	1	
37	420610395	Valve Cover	1	
38	420440560	Torx Screw M6 X 30.5	4	
39	707000246	Spark Plug, NGK DCP-R8E	1	
40	420254374	Valve Guide	4	

COMMANDER 2013 STD, DPS, XT, 800R EFI / Engine

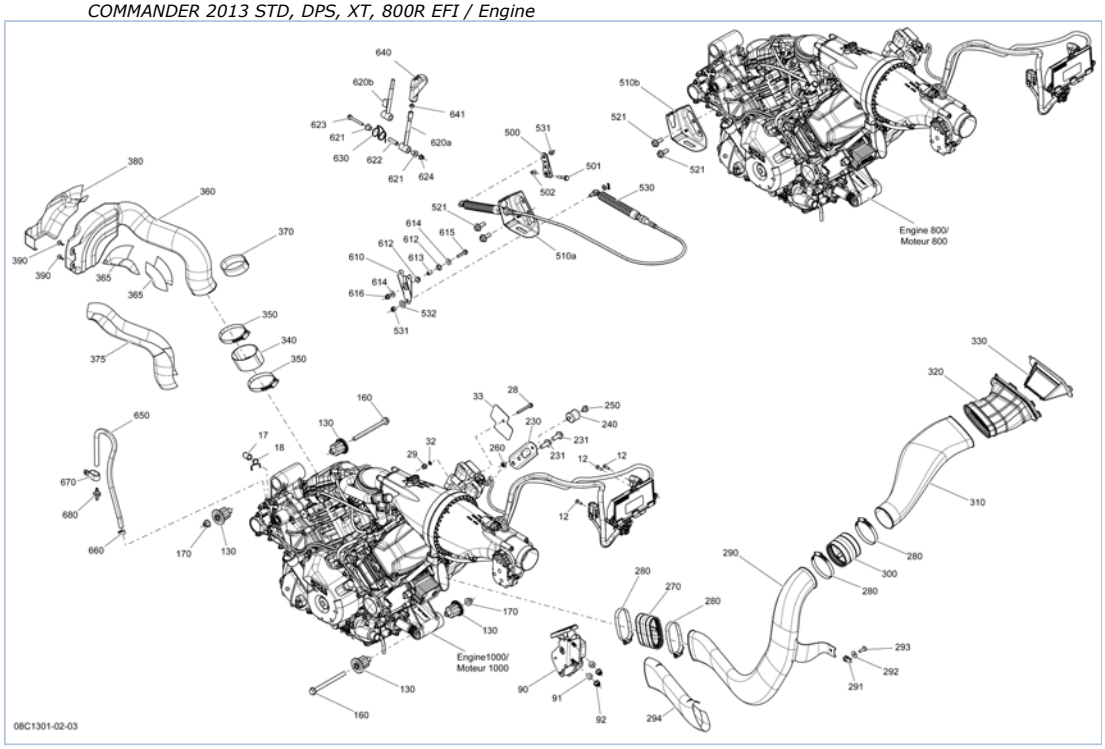

Part List

COMMANDER 2013 STD, DPS, XT, 800R EFI / Engine

ITEM	PART NUMBER	PART NAME	QUANTITY	REMARKS
12	250000146	Truss Head Torx Screw K50 X 16	3	
17	707001185	Plug	1	
18	707800506	RETAINER CLIP	1	
28	207665044	Hex. Flanged Screw M6 X 50	1	
29	233261414	Hex. Flanged Elastic Nut M6	1	
32	234461608	External Serrated Lock Washer 6 mm	1	
33	710000073	INSULATOR PAD	1	
90	707001166	Accelerator Pedal	1	
91	707000848	Bushing	2	
92	233281414	Hex. Flanged Elastic Nut M8	2	
130	707000426	ANTI-VIBRATION MOUNT	4	
160	230602546	Hex. Flanged Screw M10 X 125	2	
170	233201436	Flanged Elastic Nut	2	
230	707000707	Upper Engine Bracket	1	
231	207602544	HEX. FLANGED SCREW M10 X 25	2	
240	707000949	RUBBER ISOLATOR	1	
250	207581046	Flanged Screw M8 x 10, Scotch Grip	1	
260	232581414	Hex. Elastic Stop Nut M8	1	
270	707001043	Flexible Adaptor	1	
280	293650091	Norma Clamp	4	
290	707000639	Air Inlet	1	
291	250000048	Pannel Nut M6 X 1.0	1	
292	250200082	Flat Washer	1	
293	250000128	Torx Truss Screw M6 X 20	1	
294	707000924	Reflective Sheet	1	
300	707001043	Flexible Adaptor	1	
310	707000909	Primary Air Intake	1	
320	707000908	Adaptor	1	
330	707000873	CVT Filter	1	
340	707000789	Adaptor	1	
350	293650118	Norma Gear Clamp	2	
360	707000640	CVT Air Outlet	1	
365	707000991	Reflective Sheet	2	
370	707000988	Reflective Sheet	1	
375	707000989	Reflective Sheet	1	
380	707000990	Reflective Sheet	1	
390	250000113	Screw M4 X 16, Type K-40	2	
500	707000911	Lever	1	
501	207663544	Hex. Flanged Screw M6 X 35	1	
502	233261414	Hex. Flanged Elastic Nut M6	1	
510a	N/A	Not available for this vehicle	1	
510b	707000921	CABLE SUPPORT	1	
521	207602544	HEX. FLANGED SCREW M10 X 25	2	
530	707000775	Shifting Cable	1	
531	232581414	Hex. Elastic Stop Nut M8	2	
532	234001410	Flat Washer 10 mm	1	
610	707000828	Lower Lever Arm	1	
612	707000847	Flanged Bushing	2	
613	707000801	Bushing	1	
614	234062410	Flat Washer 6 mm	2	
615	207663044	Hex. Flanged Screw M6 X 30	1	

616	233261414	Hex. Flanged Elastic Nut M6	1	
620a	707000711	Upper Lever Arm	1	Except Europe
620b	707000978	Upper Lever Arm	1	Europe
621	707000869	Flanged Bushing	2	
622	707000868	Bushing	1	
623	207665044	Hex. Flanged Screw M6 X 50	1	
624	233261414	Hex. Flanged Elastic Nut M6	1	
630	707000750	Lever Arm Spring	1	
640	707000284	LEVER HANDLE	1	
641	232180491	HEX. JAM NUT M8	1	
650	415079800	Hose 1/4"	1	
660	414415200	Universal Spring Clamp	1	
670	709000057	Open Clamp	1	
680	275500398	Check Valve	1	

800

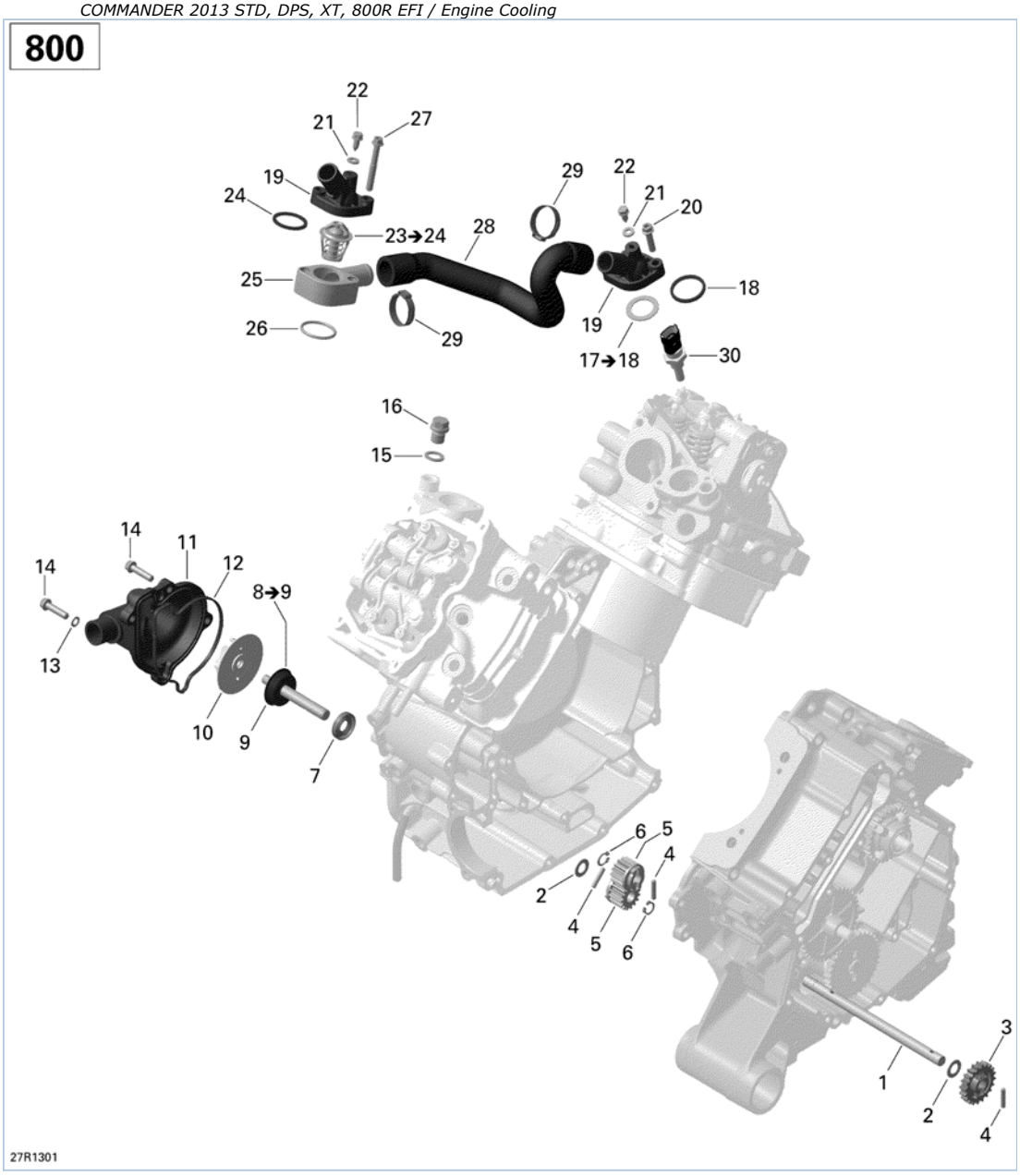
22
21
27
19
24
29
22
21
20
23→24
28
25
18
26
29
19
17→18
30
16
15
14
11
12
14
8→9
13
10
9
7
6
5
4
2
4
5
6
3
1
2
4
27R1301

Part List

COMMANDER 2013 STD, DPS, XT, 800R EFI / Engine Cooling

ITEM	PART NUMBER	PART NAME	QUANTITY	REMARKS
1	420620500	Intermediate Shaft	1	
2	420827590	Thrust Washer	2	
3	420434330	Water Pump Gear	1	
4	420232420	Needle Pin	3	
5	420234627	Pump Gear, 15 Teeth	2	
6	420245330	Snap Ring	2	
7	420650310	Oil Seal	1	
8	420620175	Water Pump Shaft Ass'y	1	Includes 8 to 9
9	420650370	Rotary Seal	1	
10	420222505	Water Impeller	1	
11	420222785	Water Pump Housing	1	
12	420651190	Gasket	1	
13	420230415	Seal Washer	1	
14	420641238	Flanged Torx Screw M6 X 25	4	
15	420250640	Copper Washer	1	
16	420841921	Plug Screw M12 X 1.5	1	
17	420927837	Spacer Ass'y	1	Includes 17 to 18
18	420650300	Thermostat Gasket	2	
19	420222690	Thermostat Cover	2	
20	420641238	Flanged Torx Screw M6 X 25	2	
21	420650255	Gasket Ring	2	
22	420441621	SCREW M5 X 16	2	
23	420222494	Thermostat 65 deg With Gasket Ass'y	1	Includes 23 to 24
24	420650300	Thermostat Gasket	1	
25	420222890	Connection Socket	1	
26	420631300	O-Ring	1	
27	420641198	Flanged Torx Screw M6 X 45	2	
28	420822352	Water Tube	1	
29	420251573	Gear Clamp	2	
30	278001016	Temperature Sensor	1	

800

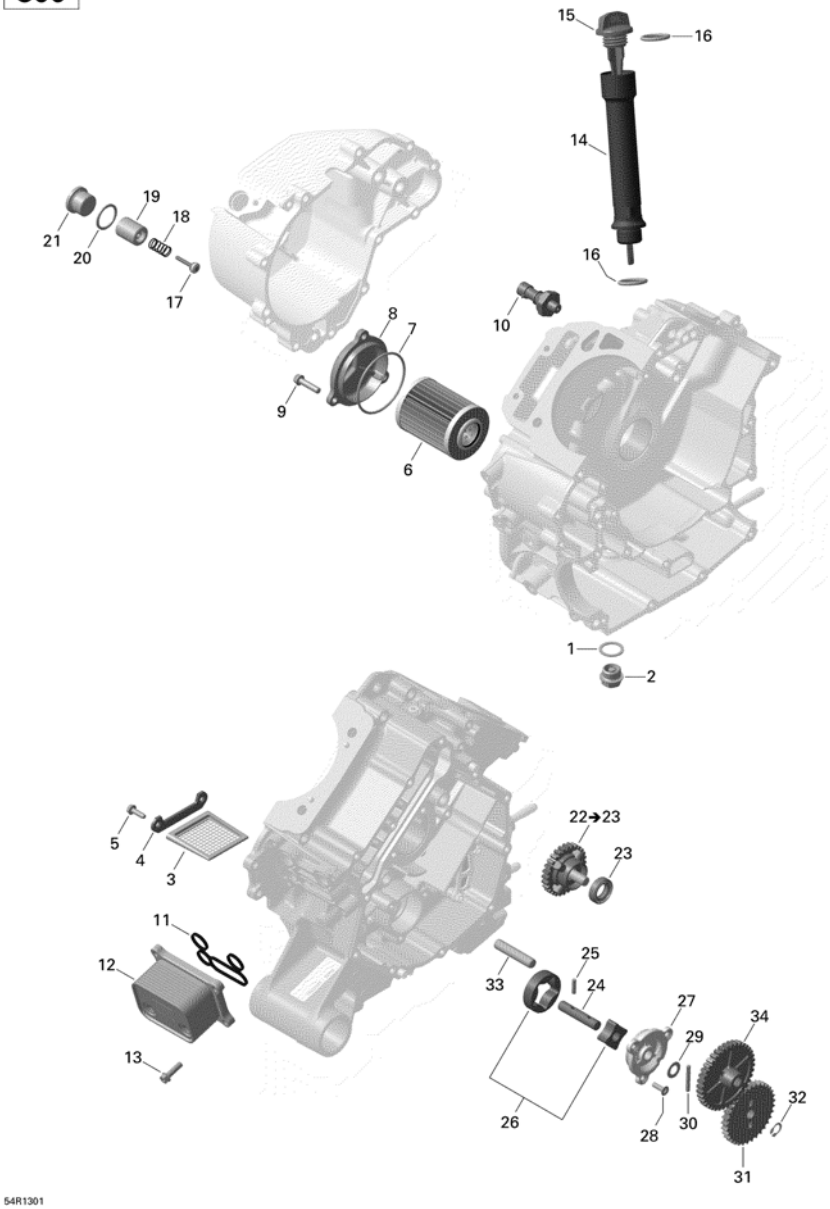
15
16
14
16
19
18
21
20
17
10
8
7
9
6
1
2
5
4
3
22→23
23
11
12
13
33
25
24
27
29
34
26
28
30
32
31
54R1301

Part List

COMMANDER 2013 STD, DPS, XT, 800R EFI / Engine Lubrication

ITEM	PART NUMBER	PART NAME	QUANTITY	REMARKS
1	420552280	O-Ring	1	
2	420840277	DRAIN PLUG M18 X 1.5	1	
3	420256321	Oil Sieve	1	
4	420612070	Cover Sieve	1	
5	420941925	Tapping Screw M5 X 16	2	
6	420256188	Oil Filter	1	
7	420230920	O-Ring	1	
8	420210418	Oil Filter Cover	1	
9	420641238	Flanged Torx Screw M6 X 25	3	
10	420256915	Oil Pressure Switch	1	
11	420430325	Oil Seal	1	
12	420890180	Oil Radiator	1	
13	420641048	Flanged Torx Screw M6 X 16	4	
14	420856922	Oil Lever Tube	1	
15	420856810	Oil Dipstick	1	
16	420631640	O-Ring	2	
17	420656370	Pressure Relief Valve	1	
18	420939485	Compression Spring	1	
19	420256486	Housing Valve	1	
20	420650465	Gasket Ring	1	
21	420640270	Screw Plug	1	
22	420434307	Idle Gear Ass'y, 28 Teeth	1	Includes 22 to 23
23	420430555	Oil Seal	1	
24	420237059	Oil Pump Shaft	1	
25	420232730	Needle Pin	1	
26	420256348	Oil Pump Rotor	1	
27	420210641	Oil Pump Cover	1	
28	420640821	Torx Screw M5 X 16	3	
29	420827590	Thrust Washer	1	
30	420232430	Needle Pin	1	
31	420434320	Oil Pump Gear, 33 Teeth	1	
32	420245330	Snap Ring	1	
33	420229302	Location Pin	1	
34	420434300	Idle Gear, 38 Teeth	1	

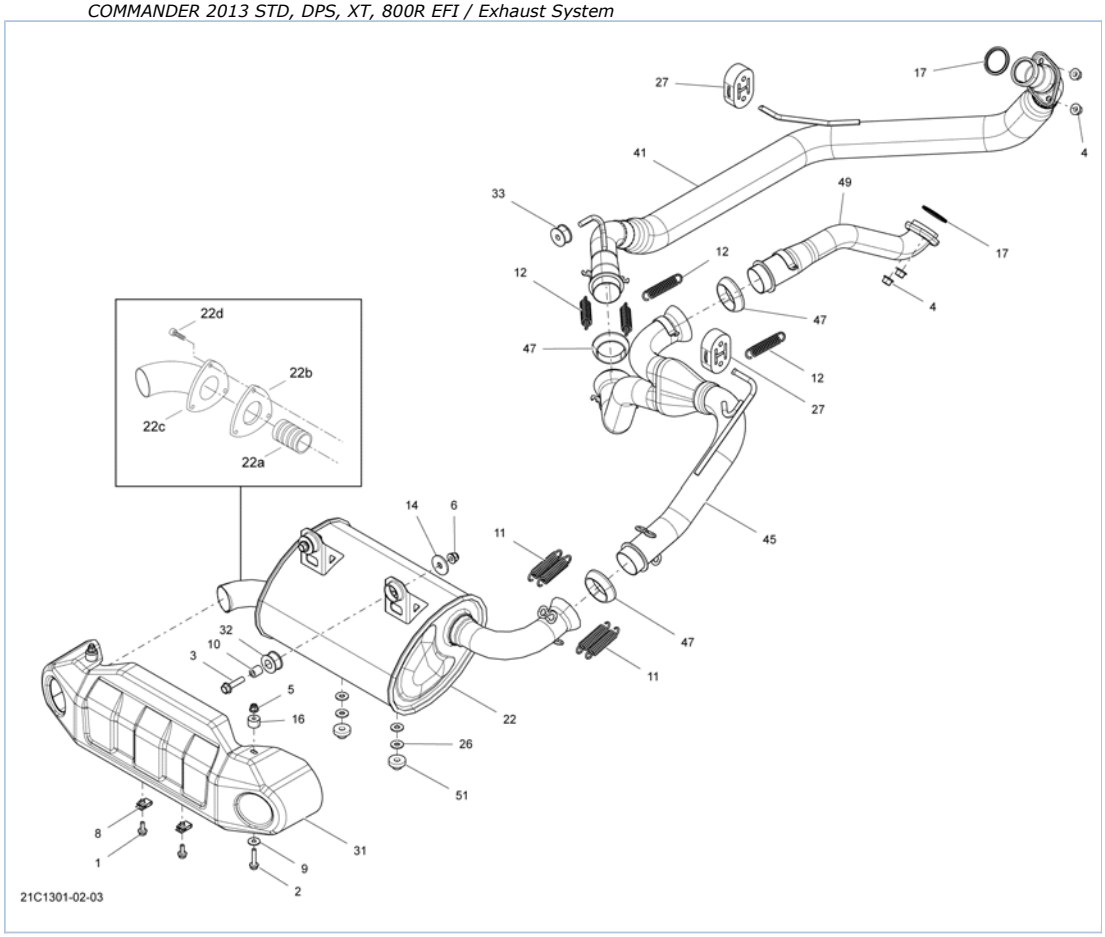
27
17
4
41
33
49
17
12
12
4
47
47
12
27
22d
22b
22c
22a
14
6
11
45
32
10
3
47
5
11
16
22
26
51
8
31
1
9
2
21C1301-02-03

Part List

COMMANDER 2013 STD, DPS, XT, 800R EFI / Exhaust System

ITEM	PART NUMBER	PART NAME	QUANTITY	REMARKS
1	207661644	Hex. Flanged Screw M6 X 16	2	
2	207663044	Hex. Flanged Screw M6 X 30	2	
3	207683544	Hex. Flanged Screw M8 X 35	2	
4	233081416	Hex. Flanged Nut M8	4	
5	233261414	Hex. Flanged Elastic Nut M6	2	
6	233281414	Hex. Flanged Elastic Nut M8	2	
8	250000048	Pannel Nut M6 X 1.0	2	
9	250200082	Flat Washer	2	
10	293900106	Bushing	2	
11	415107100	Spring	4	
12	415107100	Spring	4	
14	503032900	Washer	2	
16	707000882	Bushing	2	
17	707600317	Gasket	2	
22	707600545	Muffler Ass'y	1	
22	707600753	Muffler Ass'y	1	Europe
26	XXX	Washer	4	
27	707600638	Rubber Bumper	2	
31	707600675	Deflector	1	
32	707600701	Anti-Vibration Rubber	2	
33	707600702	Anti-Vibration Rubber	1	
41	707601015	Front Head Pipe	1	
45	707601020	Link Head Pipe	1	
47	707601033	Exhaust Gasket	3	
49	707601018	Rear Head Pipe	1	
51	709200285	Grommet	2	
22a	715900089	Spark Arrestor	1	
22b	715900090	Gasket	1	
22c	715900091	Muffler Outlet End Piece	1	
22d	205062060	Socket Head Screw M6 X 20	3	

COMMANDER 2013 STD, DPS, XT, 800R EFI / Air Intake

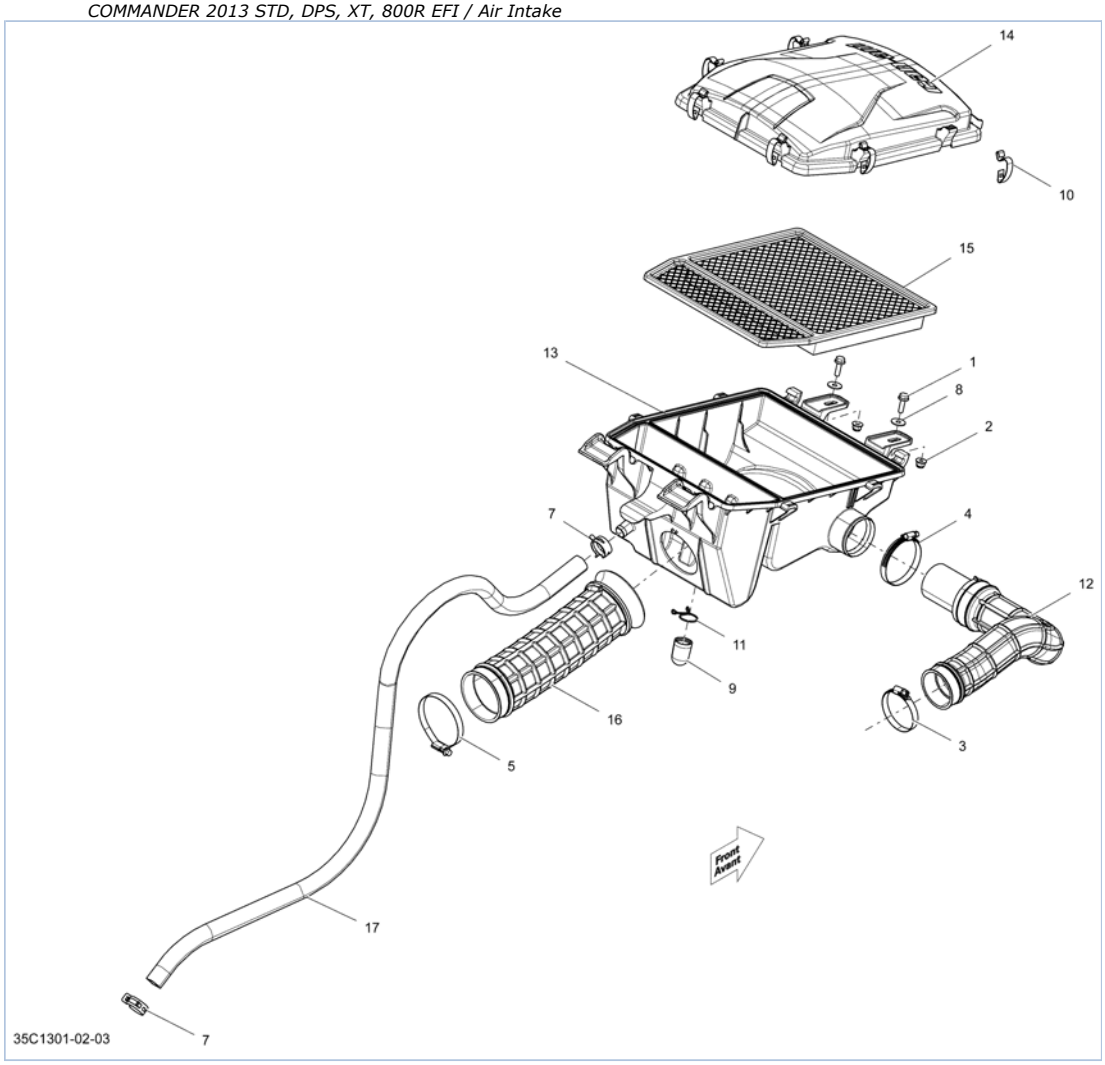

Part List

COMMANDER 2013 STD, DPS, XT, 800R EFI / Air Intake

ITEM	PART NUMBER	PART NAME	QUANTITY	REMARKS
1	207662044	Hex. Flanged Screw M6 X 20	2	
2	233261414	Hex. Flanged Elastic Nut M6	2	
3	293650078	Norma Clamp	1	
4	293650079	Norma Clamp	1	
5	293650091	Norma Clamp	1	
7	293650213	Norma Spring Clamp	2	
8	391302000	Flat Washer	2	
9	707800080	DRAIN TUBE	1	
10	707800249	COVER BRACKET	6	
11	293650091	Norma Clamp	1	
12	707800322	Intake Adaptor	1	
13	707800325	AIR INTAKE SILENCER BASE	1	
14	707800326	Air Intake Silencer Cover	1	
15	707800327	Air Filter	1	
16	707800329	Intake Adaptor	1	
17	707800411	Hose 15.88 mm	AR	

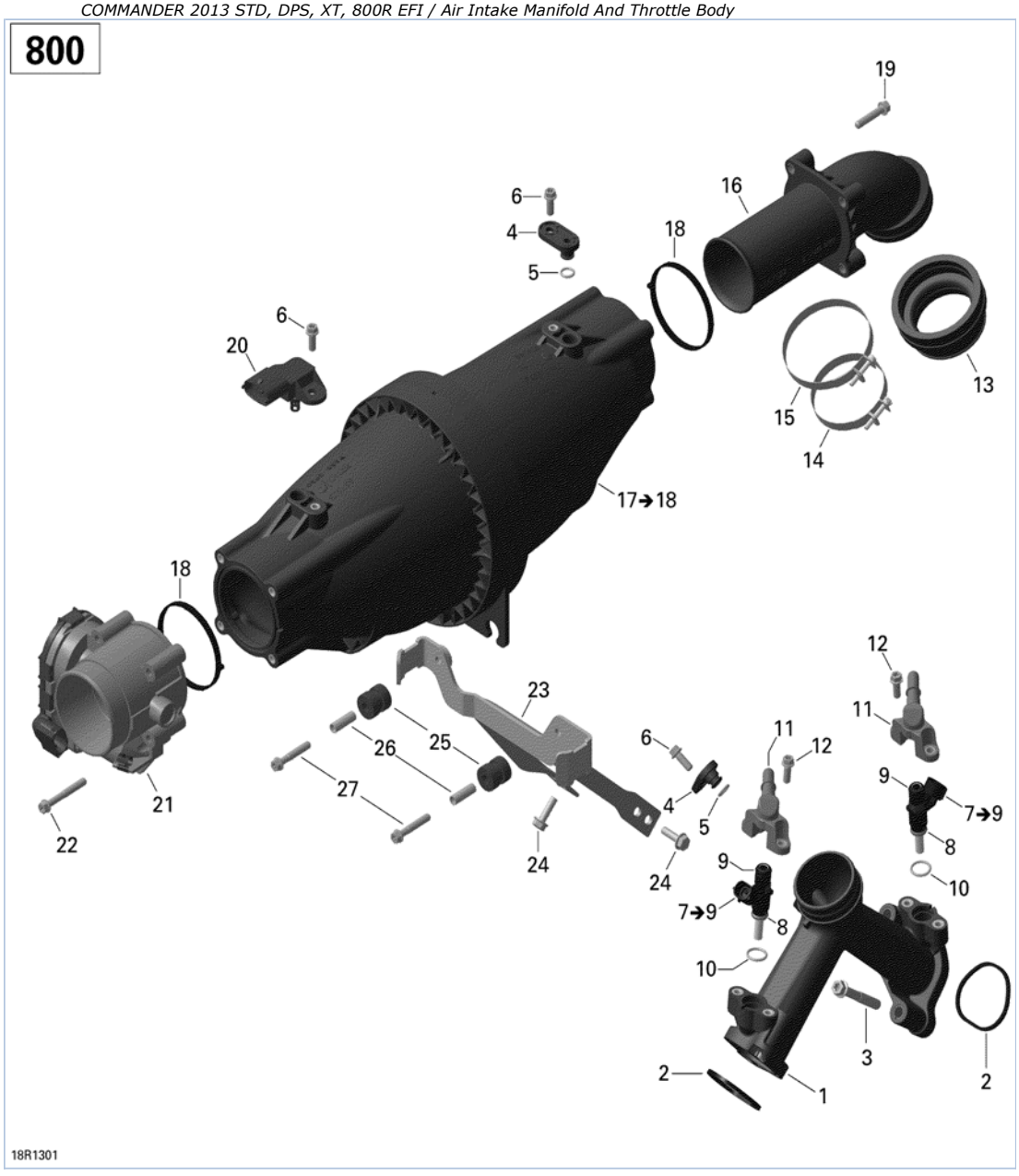
800
19
16
6
4
5
18
6
20
13
15
14
17→18
18
12
23
11
11
12
6
26
25
9
7→9
27
4
5
21
22
24
24
8
9
10
7→9
8
10
3
2
2
1
18R1301

Part List

COMMANDER 2013 STD, DPS, XT, 800R EFI / Air Intake Manifold And Throttle Body

ITEM	PART NUMBER	PART NAME	QUANTITY	REMARKS
1	420667581	Air Intake Manifold	1	
2	420630642	Gasket	2	
3	420641213	Flanged Torx Screw M8 X 55	4	
4	420460980	Cover	2	
5	420230461	O-Ring	2	
6	420440142	Torx Flange Screw M6 X 12	3	
7	420874839	Injection Valve Ass'y	2	Includes 7 to 9
8	420431890	O-Ring	1	
9	420631220	O-Ring	1	
10	420631295	O-Ring	2	
11	420874901	Fuel Rail	2	
12	420641048	Flanged Torx Screw M6 X 16	4	
13	420267045	INTAKE NECK	1	
14	420251480	Clamp	1	
15	420251209	Clamp	1	
16	420667522	Air Inlet Manifold	1	
17	420667526	Air Inlet Manifold Ass'y	1	Includes 17 to 18
18	420431900	Gasket	2	
19	420241947	Hex. Screw M6 X 30	4	
20	707000564	Pressure And Temperature Sensor	1	
21	420892595	Throttle Body	1	
22	420641198	Flanged Torx Screw M6 X 45	4	
23	420651520	Support	1	
24	420441311	HEX.SCREW M6 X 20	2	
25	420660090	Rubber Bracket	2	
26	420847971	Spacer	2	
27	420441457	Hex. Screw M6 X 35	2	

COMMANDER 2013 STD, DPS, XT, 800R EFI / Fuel System

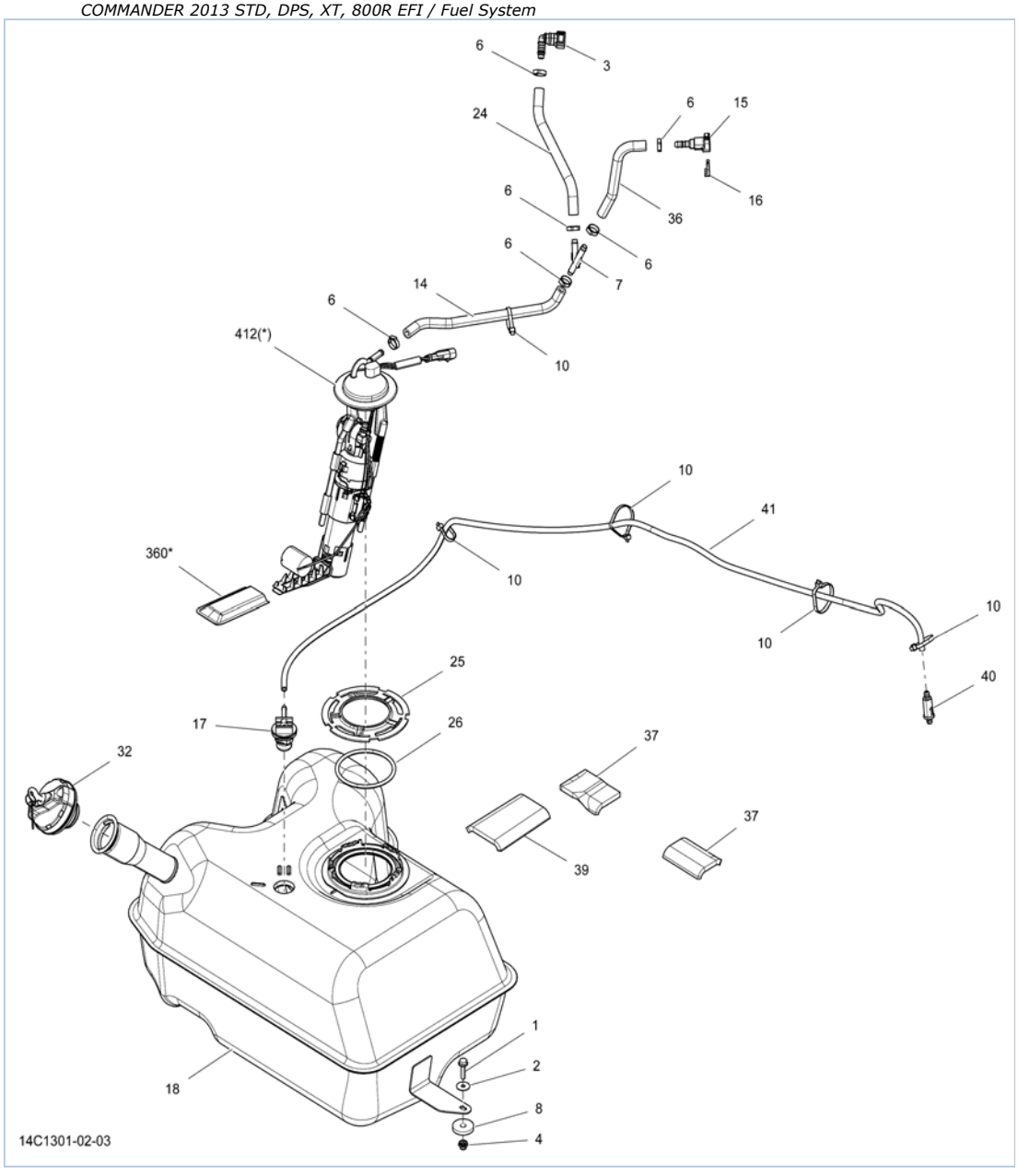

Part List

COMMANDER 2013 STD, DPS, XT, 800R EFI / Fuel System

ITEM	PART NUMBER	PART NAME	QUANTITY	REMARKS
1	207662544	Hex. Flanged Screw M6 X 25	2	
2	224060201	Flat Washer	2	
3	275500700	Quick Attach 90 deg	1	
4	293450274	Insert	2	
6	293650046	Oetiker Clamp	6	
7	293710136	Y-Fitting, 5/16''	1	
8	293830037	Rubber Washer	2	
10	414115200	Tie-Rap 180 mm	5	
14	709000393	Fuel Line	AR	
15	709000125	Female Quick Fitting Ass'y	1	
16	513033135	Locking Clip	1	
17	709000127	Rollover Valve	1	
18	709000196	Fuel Tank	1	
24	709000393	Fuel Line	AR	
25	709000274	Ring	1	
26	709000275	O-Ring	1	
32	709000268	Cap	1	
32	715001124	Fuel Cap Kit	1	Europe
36	709000393	Fuel Line	AR	
37	709000288	NEOPRENE PAD	2	
39	709000289	NEOPRENE PAD	1	
40	709000330	Filter	1	
41	415080200	Hose, Polyurethane	AR	
360	709000389	Fuel Pre-Filter	1	
412	709000362	Fuel Pump	1	

800

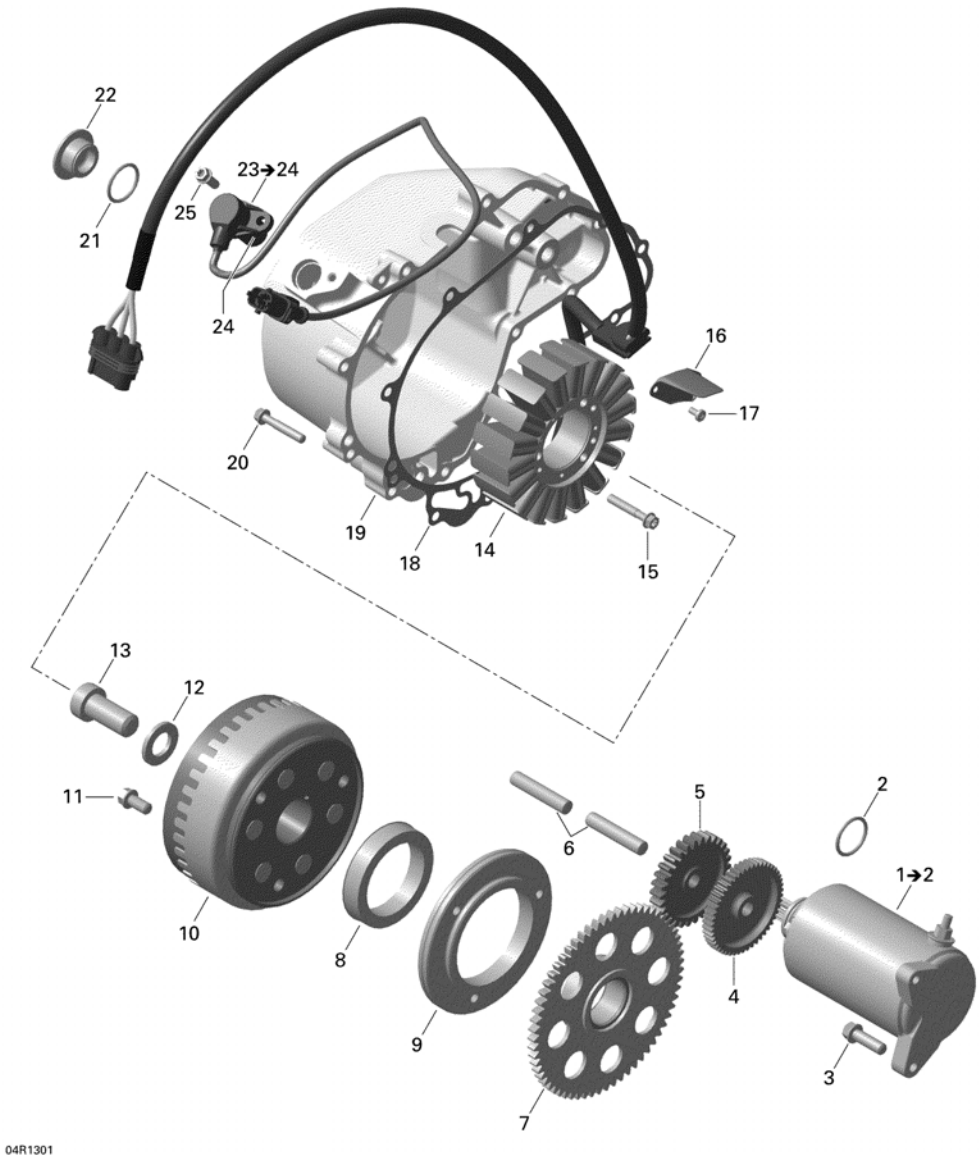
22
21
23➔24
25
24
16
17
20
19
18
14
15
13
12
11
10
8
9
6
5
4
2
1➔2
3
7
04R1301

Part List

COMMANDER 2013 STD, DPS, XT, 800R EFI / Magneto And Electric Starter

ITEM	PART NUMBER	PART NAME	QUANTITY	REMARKS
1	420684560	Starter Ass'y	1	Includes 1 to 2
2	420250140	O-Ring	1	
3	420440372	Flanged Torx Screw M8 X 25	1	
4	420634741	Double Gear	1	
5	420634605	Gear, 30 Teeth	1	
6	420229302	Location Pin	2	
7	420434235	Free Wheel Gear, 64 Teeth	1	
8	420659112	Sprag Clutch	1	
9	420659261	Sprag Clutch Housing	1	
10	420685649	Flywheel	1	
11	420440852	Flanged Torx Screw M8 X 16	3	
12	420627270	Shim	1	
13	420241549	Socket Head Screw M16 X 35	1	
14	420685632	Stator Plate	1	
15	420641258	Flanged Torx Screw M6 X 35	3	
16	420251880	Cable Inner Cover	1	
17	420240195	Tapping Screw M4 X 8	2	
18	420651200	Gasket	1	
19	420611132	Cover	1	
20	420641258	Flanged Torx Screw M6 X 35	11	
21	420430782	O-Ring	1	
22	420241630	Screw Plug	1	Includes 23 to 24
23	420966570	Crankshaft Position Sensor Ass'y	1	
24	420431580	O-Ring	1	
25	420641048	Flanged Torx Screw M6 X 16	1	

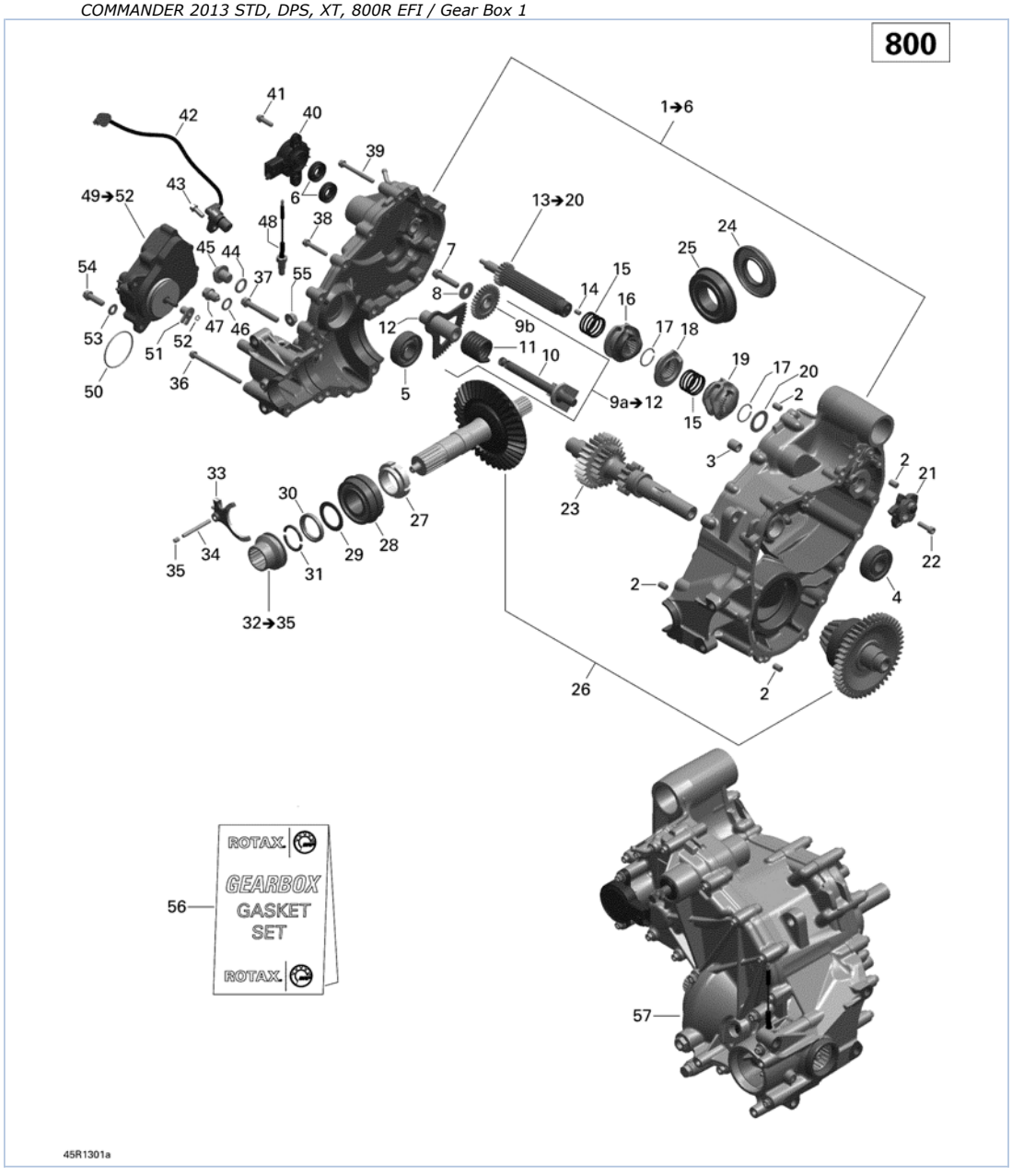
800
1➔6
13➔20
9a➔12
32➔35
ROTAX
GEARBOX
GASKET
SET
ROTAX
56
57
45R1301a

Part List

COMMANDER 2013 STD, DPS, XT, 800R EFI / Gear Box 1

ITEM	PART NUMBER	PART NAME	QUANTITY	REMARKS
1	XXX	Gear Housing Ass'y	1	Includes 1 to 6 See Item 57, Gear Box
2	420632010	Center Pin 8 X 12	2	
3	XXX	Dowel	1	See Item 57, Gear Box
4	420932815	BALL BEARING 6303E	1	
5	420932433	Ball Bearing	1	
6	420250450	Oil Seal	2	
7	420641188	Flanged Torx Screw M8 X 35	1	
8	420227937	PLAIN WASHER	1	
9a	420620929	SHIFT SHAFT ASS'Y	1	Includes 9a to 12
9b	XXX	Intermediate Gear, 30 Teeth	1	
10	XXX	SHIFT SHAFT	1	
11	XXX	Spring	1	
12	XXX	Tooth Segment	1	
13	420657230	SHIFT DRUM ASS'Y	1	Includes 13 to 20
14	XXX	Needle Pin	1	
15	XXX	Compression Spring	2	
16	XXX	Gear Shifting Gate	1	
17	XXX	Retaining Ring	2	
18	XXX	Disengagement Gate	1	
19	XXX	Gear Shifting Gate	1	
20	XXX	Thrust Washer	1	
21	XXX	Index Washer	1	
22	420241932	ALLEN SCREW M6 X 20	1	
23	420620896	Countershaft	1	
24	420831957	Oil Seal	1	
25	XXX	Ball Bearing	1	See Item 57, Gear Box
26	XXX	Drive Axle Set	1	See Item 57, Gear Box
27	XXX	Groove Nut	1	See Item 57, Gear Box
28	XXX	Ball Bearing	1	See Item 57, Gear Box
29	XXX	Shim Set	1	See Item 57, Gear Box
30	XXX	Angular Ring	1	See Item 57, Gear Box
31	XXX	Half Ring	2	See Item 57, Gear Box
32	420257676	Shifting Sleeve Kit	1	Includes 32 to 35
33	XXX	Shifting Fork	1	
34	XXX	Needle Pin	1	
35	420841772	Set Screw M6 X 8	1	
36	420641228	Flanged Torx Screw M6 X 85	2	
37	420641213	Flanged Torx Screw M8 X 55	5	
38	420641258	Flanged Torx Screw M6 X 35	8	
39	420440702	Flanged Torx Screw M6 X 55	2	
40	420266167	Angle Rotation Sensor	1	
41	420641048	Flanged Torx Screw M6 X 16	2	
42	420265626	SPEED SENSOR	1	
43	420641048	Flanged Torx Screw M6 X 16	1	
44	420650350	O-Ring	1	
45	420241660	Plug Screw M14 X 1.5	1	
46	420250640	Copper Washer	1	
47	420241786	Magnetic Drain Plug	1	
48	420640192	Position Switch	1	
49	415129174	Actuator Ass'y	1	Includes 49 to 52
50	415129175	Shifting Fork	1	
51	415129176	Circlip	1	
52	293300117	O-Ring	1	
53	420250311	Flat Washer 8.4 mm	3	
54	420440372	Flanged Torx Screw M8 X 25	3	

55	420842619	Hex. Nut M8	4	
56	420684139	Gasket Set	1	
57	420684786	Gear Box	1	

800

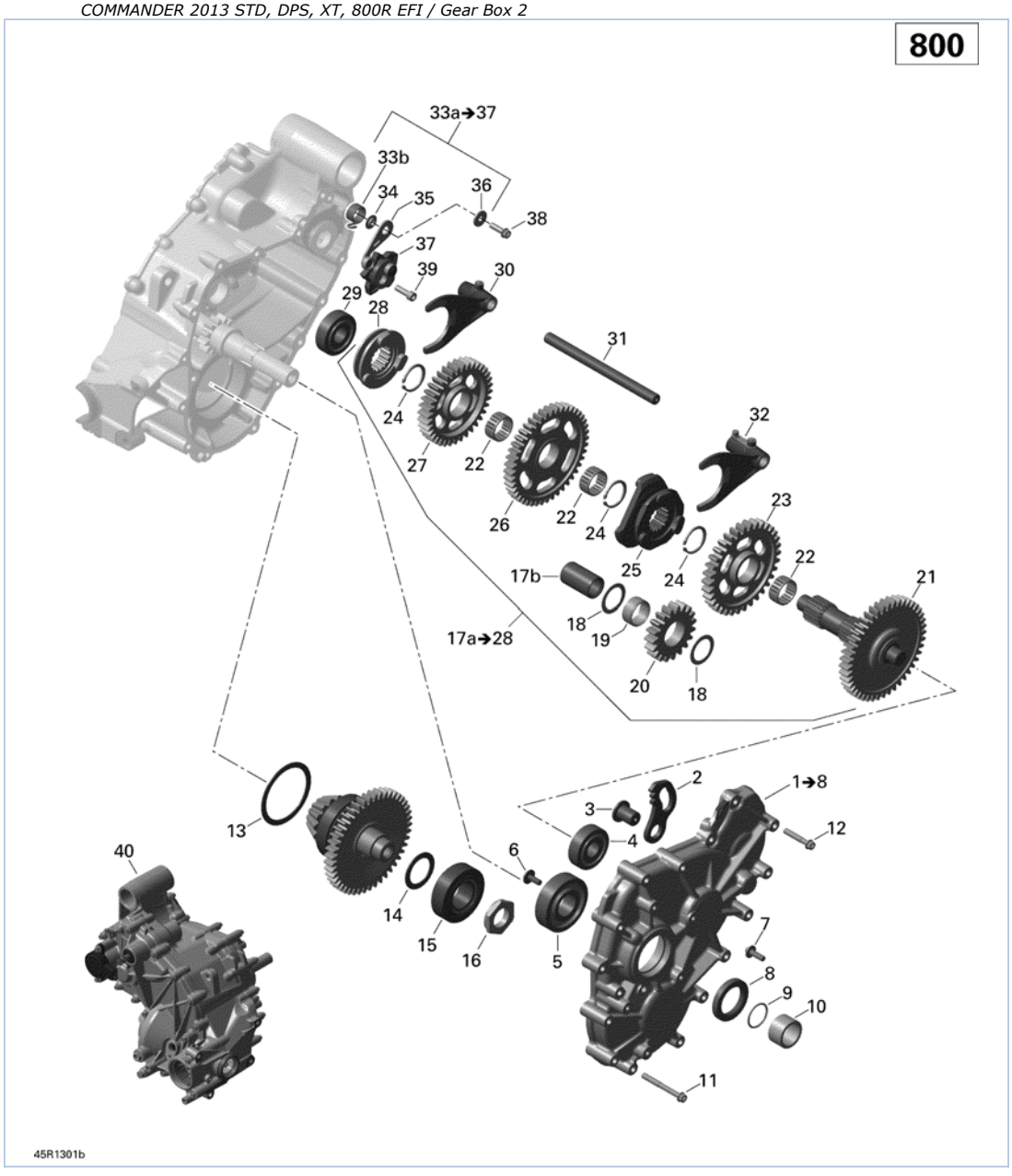
33a➔37
33b
34
35
36
38
37
39
30
29
28
31
24
27
22
26
22
24
32
23
25
24
22
21
17b
18
19
17a➔28
20
18
13
2
1➔8
3
12
4
40
6
14
15
16
5
7
8
9
10
11
45R1301b

Part List

COMMANDER 2013 STD, DPS, XT, 800R EFI / Gear Box 2

ITEM	PART NUMBER	PART NAME	QUANTITY	REMARKS
1	XXX	LH Gear Housing Ass'y	1	Includes 1 to 8 See Item 40, Gear Box
2	420257658	Parking Lock Lever	1	
3	420647120	COLLAR SLEEVE	1	
4	420932815	BALL BEARING 6303E	1	
5	420932825	Ball Bearing	1	
6	420241529	Torx Screw M6 X 16	1	
7	420441430	Distance Screw M6	1	
8	420950087	Oil Seal	1	
9	420631610	O-Ring	1	
10	420247117	Distance Ring	1	
11	420440702	Flanged Torx Screw M6 X 55	13	
12	420641258	Flanged Torx Screw M6 X 35	3	
13	XXX	Shim Set	1	See Item 40, Gear Box
14	XXX	Shim Set	1	See Item 40, Gear Box
15	XXX	ROLLER BEARING	1	See Item 40, Gear Box
16	XXX	Hex. Nut M24 X 1.5	1	See Item 40, Gear Box
17a	420281270	Gear Set	1	Includes 17a to 28
17b	XXX	INTERMEDIATE GEAR SHAFT	1	
18	420944479	Thrust Washer	2	
19	420932930	Needle Bearing	1	
20	XXX	Intermediate Gear, 19 Teeth	1	
21	XXX	Main shaft	1	
22	420632070	Needle Bearing	3	
23	420434870	Gear Pinion, 34 Teeth	1	
24	420845771	Retaining Ring	3	
25	420257951	Shifting Sleeve	1	
26	420434861	Gear Pinion, 44 Teeth	1	
27	420434853	Gear Pinion, 37 Teeth	1	
28	420257942	Shifting Sleeve	1	
30	420257628	SHIFT FORK	1	
31	420258386	FORK SPINDLE	1	
32	420257618	SHIFT FORK	1	
33a	420248529	INDEX LEVER ASS'Y	1	Includes 33a to 37
33b	XXX	Index Spring	1	
34	XXX	Step Ring	1	
35	XXX	INDEX LEVER	1	
36	XXX	Washer	1	
37	XXX	Index Washer	1	
38	420440207	Flanged Torx Screw M6 X 20	1	
39	420241932	ALLEN SCREW M6 X 20	1	
40	420684786	Gear Box	1	

800

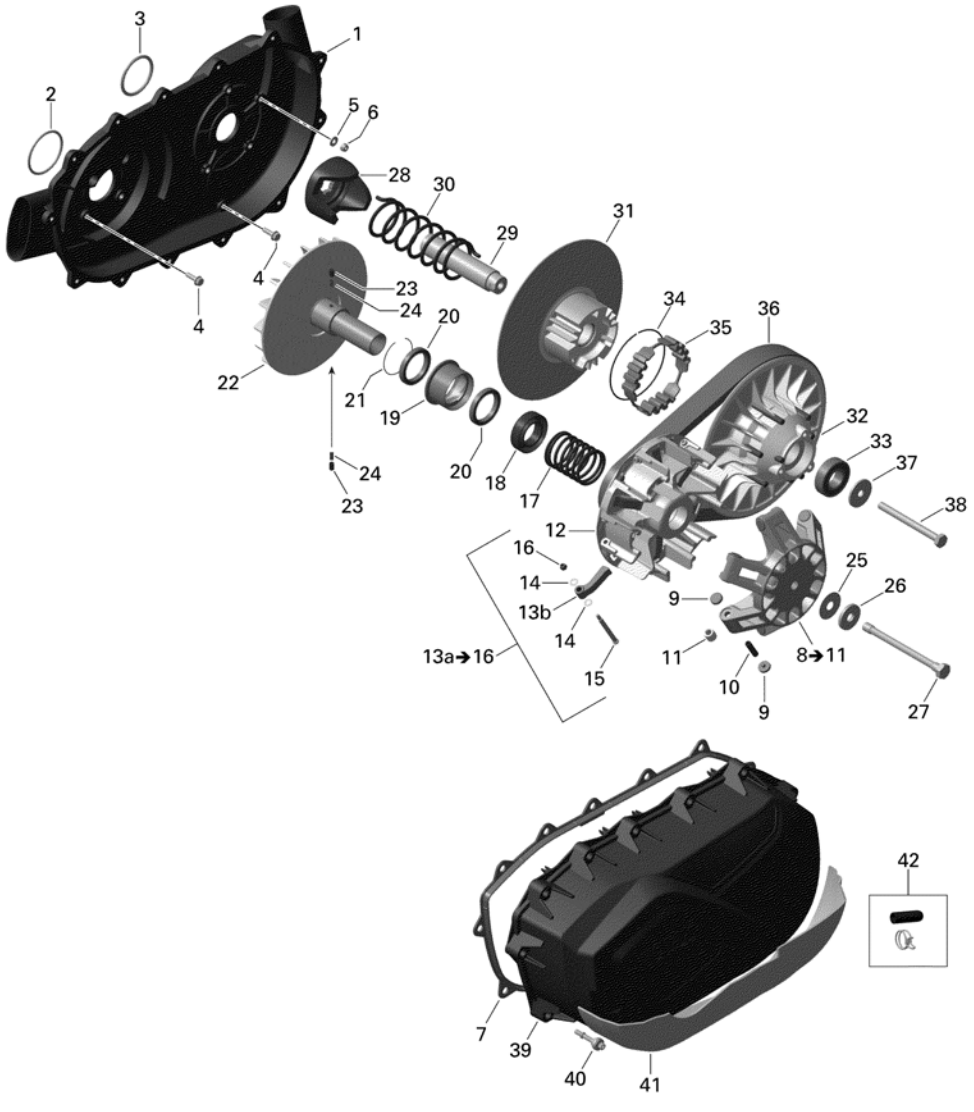
3
1
2
5
6
28
30
29
31
4
4
23
24
20
34
35
36
22
21
19
20
18
17
32
33
37
38
24
23
12
16
14
13b
14
15
13a→16
9
11
10
9
25
26
8→11
27
42
7
39
40
41
19R1301

Part List

COMMANDER 2013 STD, DPS, XT, 800R EFI / Transmission

ITEM	PART NUMBER	PART NAME	QUANTITY	REMARKS
1	420611408	CVT Air Guide	1	
2	420430408	O-Ring	1	
3	420631088	O-Ring	1	
4	420441311	HEX.SCREW M6 X 20	8	
5	224061121	Flat Washer	1	
6	232561414	Elastic Stop Nut M6	1	
7	420430126	Gasket	1	
8	420280522	Governor Cup Ass'y	1	Includes 8 to 11
9	420281296	SLIDER SHOE SET	1	
10	417223257	Roller Axle	6	
11	417223387	Roller	6	
12	420280467	Outher Haft	1	
13a	420248607	CENTRIFUGAL LEVER SET	6	Includes 13a to 16
13b	XXX	Lever	6	
14	XXX	Thrust Washer	12	
15	XXX	Screw	6	
16	XXX	Lock Nut M5	6	
17	420238615	Compression Spring, Drive Pulley	1	
18	420627577	Spring Seat	1	
19	420257195	Drive Pulley Clutch	1	
20	420632377	Ball Bearing	2	
21	420245951	Retaining Ring	1	
22	420280374	Inner half	1	
23	420229577	Spring Sleeve	2	
24	420239134	Spring	2	
25	420627920	Thrust Washer	1	
26	420627765	Spring Washer	1	
27	420641855	HEX. SCREW M12 X 135	1	
28	420280472	Cam	1	
29	420220914	Driven Pulley Shaft	1	
30	420238177	Compression Spring	1	
31	420280238	Inner Half Ass'y	1	
32	420280178	Outer Half Pulley Ass'y	1	Includes 32 to 35
33	420932421	Ball Bearing	1	
34	420245910	Retaining Ring	1	
35	420660124	Torque Gear	1	
36	715000302	V-Belt	1	
37	420627590	Thrust Washer	1	
38	420441480	HEX. SCREW M10 X 110	1	
39	420611395	Variator Cover	1	
40	420440560	Torx Screw M6 X 30.5	7	
41	420975050	Heat Protection Mat	1	
42	707001179	Drain Plug Kit	1	

COMMANDER 2013 STD, DPS, XT, 800R EFI / Brakes

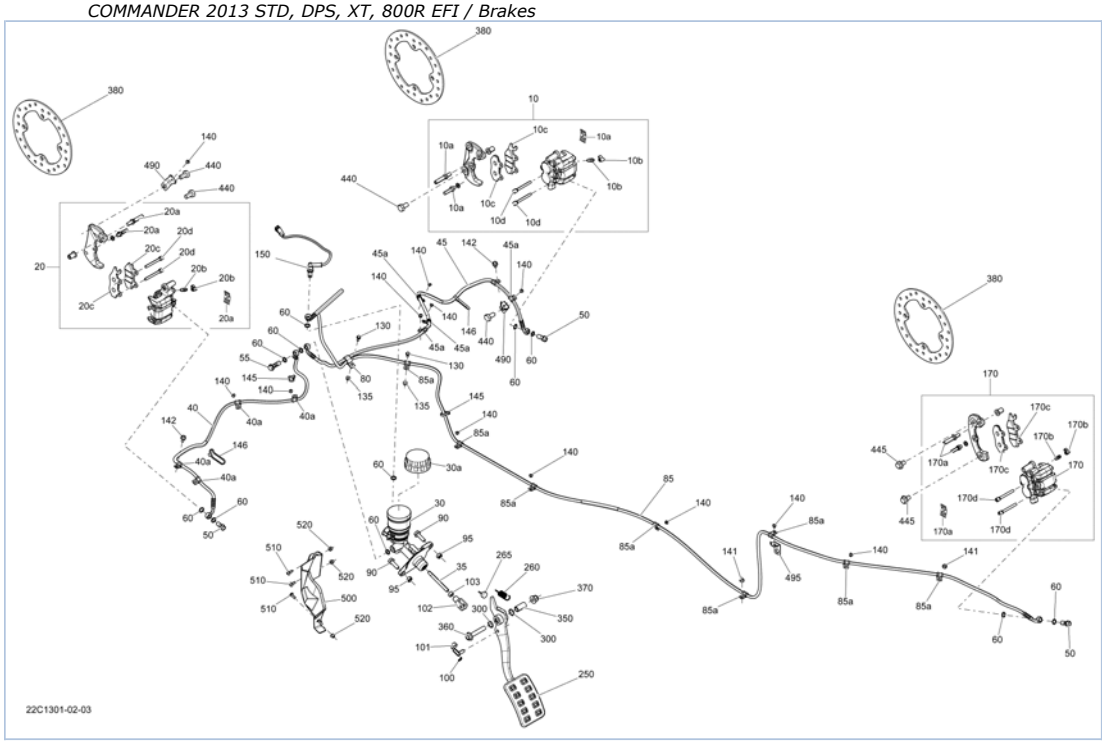

Part List

COMMANDER 2013 STD, DPS, XT, 800R EFI / Brakes

ITEM	PART NUMBER	PART NAME	QUANTITY	REMARKS
10	705600678	RH CALIPER	1	Includes 10 to 10d
10a	715500333	Spring Boot Kit	1	
10b	705600080	Bleeding Screw	1	
10c	715500336	Brake Pad Kit	1	
10d	715500337	PIN SET	1	
20	705600679	LH CALIPER	1	Includes 20 to 20d
20a	715500333	Spring Boot Kit	1	
20b	705600080	Bleeding Screw	1	
20c	715500335	Brake Pad Kit	1	
20d	715500337	PIN SET	1	
30	705600681	Master Cylinder	1	Includes 30 to 30a
30a	715500332	Diaphragm Cap Kit	1	
35	705600833	Master Cylinder Rod	1	
40	705600943	LH Front Hose	1	Includes 40 to 40a
40a	705600459	Clamp	4	
45	705600944	RH Front Hose	1	Includes 45 to 45a
45a	705600459	Clamp	5	
50	705600609	Banjo Bolt	3	
55	705600958	Banjo Bolt	1	
60	705600310	Copper Washer	11	
80	293650220	Clamp	1	
85	705600945	REAR FLEXIBLE HOSE	1	Includes 85 to 85a
85a	705600459	Clamp	8	
90	207682544	Hex. Flanged Screw M8 X 25	2	
95	232581414	Hex. Elastic Stop Nut M8	2	
100	371800700	Cotter Pin	1	
101	250400056	Pin	1	
102	705600100	YOKE	1	
103	232081414	Hex. Nut M8	1	
130	210251680	Hex. Forming Screw M5 X 16	2	
135	233251494	ELASTIC FLANGED NUT M5	2	
140	390402200	Pop Rivet 3/16"	12	
141	232561414	Elastic Stop Nut M6	2	
142	210261040	Hex. Flanged Screw M6 X 10	2	
145	414115200	Tie-Rap 180 mm	2	
146	414115200	Tie-Rap 180 mm	2	
150	705600946	Brake Switch	1	
170	705600872	REAR CALIPER	1	Includes 170 to 170d
170a	715500333	Spring Boot Kit	1	
170b	705600080	Bleeding Screw	1	
170c	715500336	Brake Pad Kit	1	
170d	715500337	PIN SET	1	
250	705600724	BRAKE PEDAL	1	
260	705600792	BRAKE PEDAL SPRING	1	
265	708000759	Rubber Stopper	1	
300	293300144	O-Ring	2	
350	705600815	Inner Spacer	1	
360	207605544	HEX. FLANGED SCREW M10 X 55	1	
370	233201414	Hex. Flanged Elastic Nut M10	1	
380	705600684	Brake Disc	3	
440	250000057	Hex. Screw M10 X 20, Scotch Grip	4	
445	250000060	Flanged Screw M10 X 16, Scotch Grip	2	

490	705601088	Bracket	2	
495	705601088	Bracket	1	
500	705600917	LH Front Deflector	1	
510	250000145	Torx Screw M5 X 14	3	
520	233251494	ELASTIC FLANGED NUT M5	3	

COMMANDER 2013 STD, DPS, XT, 800R EFI / Drive System, Front

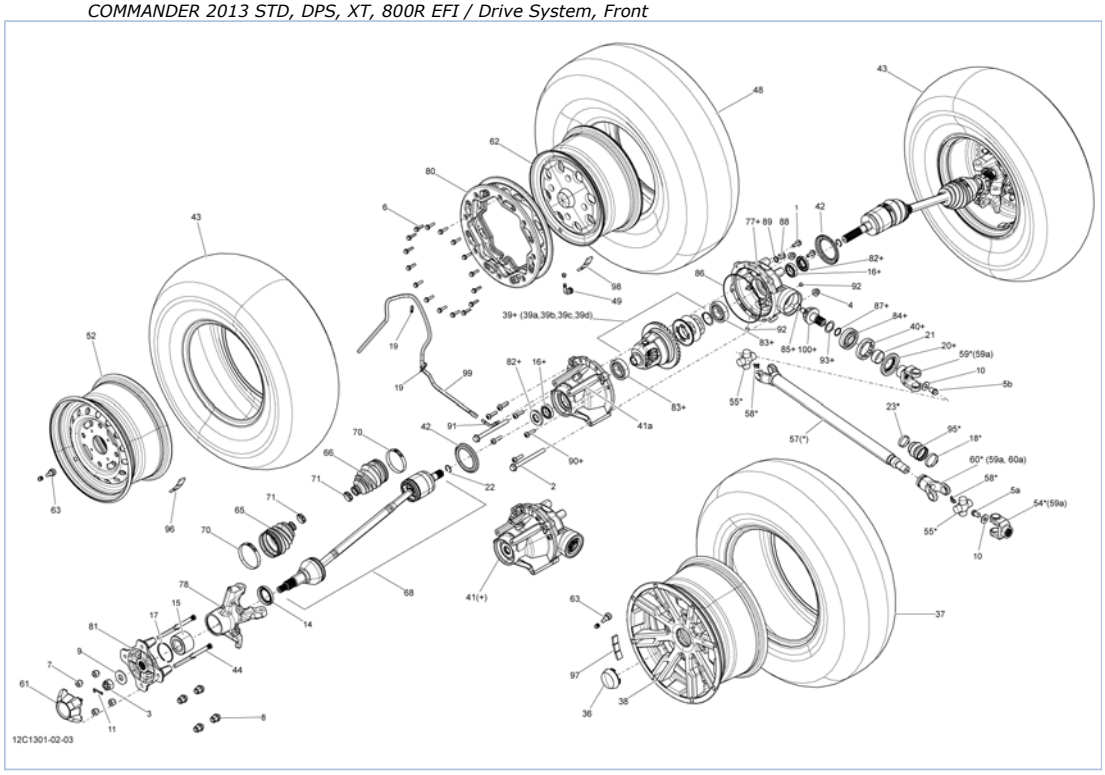

Part List

COMMANDER 2013 STD, DPS, XT, 800R EFI / Drive System, Front

ITEM	PART NUMBER	PART NAME	QUANTITY	REMARKS
1	207582044	Hex. Flanged Screw M8 X 20, Scotch Grip	2	
2	230602546	Hex. Flanged Screw M10 X 125	2	
3	250100047	HEX. CASTELLATED NUT M18	2	
4	233201416	Hex. Flanged Elastic Nut M10	2	
6	250000435	Hex. Flanged Screw M6 X 25	16	
7	250100042	Wheel Nut	8	STD Model
7	250100100	Black Wheel Nut M10 X 1.26	8	XT Model
8	250100082	Chrome Wheel Nut M10 X 1.25	8	XT Except CAMO
8	250100082	Chrome Wheel Nut M10 X 1.25	8	DPS
9	250200049	Spring Washer	2	
10	250200102	Flat Washer	2	
11	250400036	Cotter Pin	2	
14	293250246	O-Ring	2	
15	293350040	CONE BEARING	2	
16	293350044	Ball Bearing	2	
17	293370019	Circlip	2	
18	293650138	Oetiker Clamp	1	
19	293750002	Tie-Rap 142 mm	2	
20	705400027	Oil Seal	1	
21	705400036	Wear Ring	1	
22	705400042	Circlip	2	
23	509000045	Oetiker Gear Clamp	1	
36	705400504	Wheel Cap	2	XT CAMO
36	705400520	Wheel Cap	2	XT Except CAMO
36	705400520	Wheel Cap	2	DPS
37	705400631	FRONT TIRE	2	DPS
37	705400961	FRONT TIRE	2	XT Europe
38	705400632	FRONT RIM	2	DPS
38	705400919	Painted Front Rim	2	XT Silver
39	705400645	DIFFERENTIAL	1	STD Model
39	705400822	DIFFERENTIAL	1	XT, DPS Model
40	705400661	Nut	1	
41	705401135	FRONT DIFFERENTIAL ASS'Y	1	STD Model
41	705401241	FRONT DIFFERENTIAL ASS'Y	1	XT, DPS Model
42	705400780	WEAR SLEEVE	2	
43	705400781	FRONT TIRE	2	
43	705401046	FRONT TIRE	2	Europe
44	705400791	WHEEL STUD	8	
48	N/A	Not available for this vehicle	2	
49	N/A	Not available for this vehicle	2	
52	705401217	FRONT RIM	2	STD Model
54	715900121	Coupling Yoke	1	
55	715900183	U-Joint	2	
57	705400915	Axle Drive Ass'y	1	
58	715900184	Nipple	2	
59	715900116	Fixed Yoke Joint	1	
60	715900120	Spline Yoke	1	
61	705400921	Wheel Cap	2	STD Model
62	N/A	Not available for this vehicle	2	
63	705400193	Rim Valve with Cap	2	
65	XXX	BOOT KIT	1	

66	XXX	DIFFERENTIAL BOOT KIT	1	
68	705401106	RH Half Shaft	1	
68	705401105	LH Half Shaft	1	
70	XXX	Oetiker Clamp 71,1mm	2	
71	XXX	Oetiker Clamp 23mm	4	
77	705401136	Front Gear Cover	1	
78	705401204	LH Front Knuckle	1	
78	705401205	RH Front Knuckle	1	
80	N/A	Not available for this vehicle	1	Yellow
80	N/A	Not available for this vehicle	1	X Model, Black
81	705401314	WHEEL HUB	2	
82	705500255	Oil Seal	2	
83	705500259	Ball Bearing	2	
84	705500260	Ball Bearing	1	
85	705500261	Needle Bearing	1	
86	705500265	Seal	1	
87	705500267	O-Ring	1	
88	705500504	FILL LEVEL PLUG	1	
89	705500506	Copper Washer	1	
90	705500892	Screw	6	
91	705500893	Vent Valve	1	
92	705500894	Drain Plug	2	
93	705501162	PINION GEAR SHIM	1	
95	715900118	RUBBER BOOT KIT	1	
96	705501385	1/2 OZ Weight	AR	
97	705501385	1/2 OZ Weight	AR	
98	705501385	1/2 OZ Weight	AR	
99	415080200	Hose, Polyurethane	AR	
100	705501588	10 Teeth Pinion	1	
39a	703500049	Pinion Shim Kit	3	
39b	705500075	Pinion Gear Shim .022"	1	
39c	703500288	DIFFERENTIAL SHIM KIT	8	
39d	703500050	DIFFERENTIAL SHIM KIT	5	
41a	705400762	Front Cover	1	
59a	715900117	Snap Ring	8	
5a	250000359	Hex Flanged Screw M12 x 16	1	
5b	250000378	Hex Flanged Screw S.Grip M12 X 16	1	
60a	715900185	Cover	1	

COMMANDER 2013 STD, DPS, XT, 800R EFI / Front Suspension

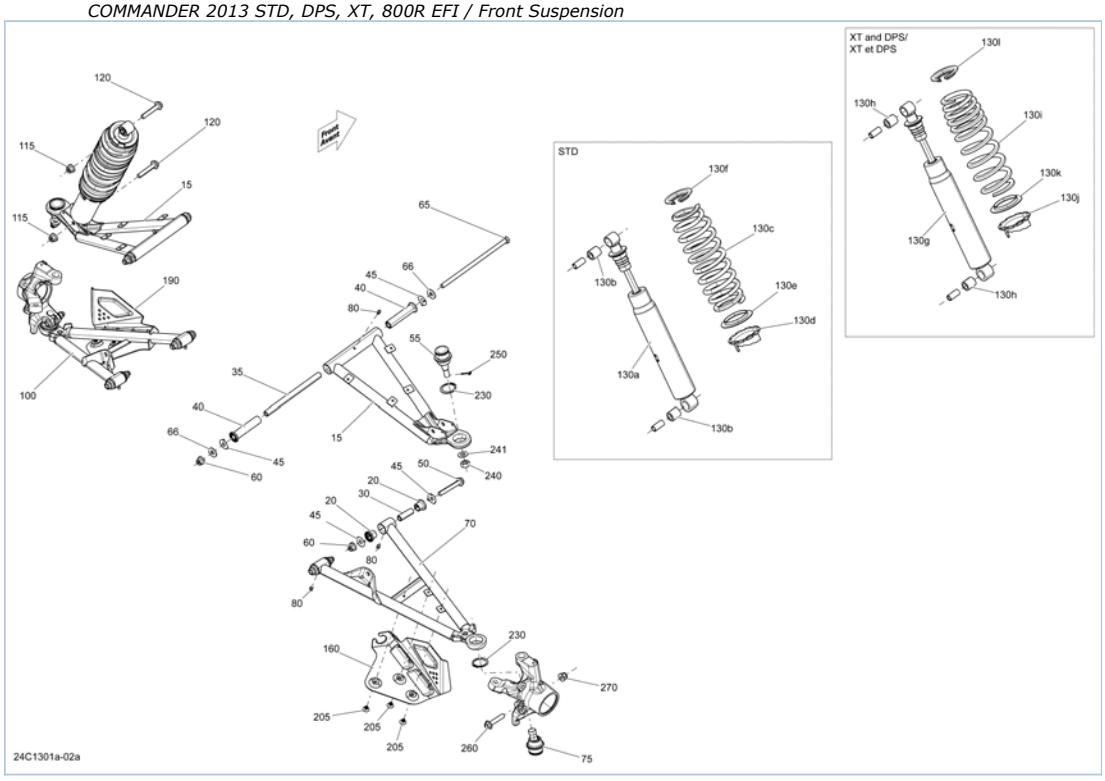

Part List

COMMANDER 2013 STD, DPS, XT, 800R EFI / Front Suspension

ITEM	PART NUMBER	PART NAME	QUANTITY	REMARKS
15	706200796	Suspension Upper Arm	2	
20	706200181	Cushion	8	
30	706201587	INNER BUSHING	4	
35	706201061	INNER BUSHING	2	
40	706201062	Cushion	4	
45	706201063	Wear Plate	12	
50	207607046	HEX. FLANGED SCREW M10 X 70	4	
55	706201370	Upper Ball Joint	2	
60	233201416	Hex. Flanged Elastic Nut M10	6	
65	250000510	Hex. Cap Screw M10 X 225	2	
66	503190439	Washer	4	
70	706200744	RH Lower Suspension Arm	1	
75	706201371	Lower Ball Joint	2	
80	408200700	Grease Fitting	6	
100	706200742	LH Lower Suspension Arm	1	
115	233201416	Hex. Flanged Elastic Nut M10	4	
120	207605544	HEX. FLANGED SCREW M10 X 55	4	
130a	706200780	Front Shock	2	STD Model, Includes 130a to 130b
130b	715900122	Bushing	4	STD Model
130c	706201631	Front Spring, Silver-Yellow	2	STD Model
130d	706000910	Adjustable Ring	2	STD Model
130e	706000911	Protector Ring	2	STD Model
130f	706000567	Spring Stopper	2	STD Model
130g	706200782	Front Shock	2	XT and DPS Model, Includes 130g to 130h
130h	715900122	Bushing	4	XT and DPS Model
130i	706200860	Front Spring, Green-Black-Black	2	XT Yellow Model
130i	706201369	Front Spring, Red-Yellow	2	XT Magnesium Model
130i	706201369	Front Spring, Red-Yellow	2	XT Camo Model
130i	706200860	Front Spring, Green-Black-Black	2	DPS Model
130j	706000910	Adjustable Ring	2	XT and DPS Model
130k	706000911	Protector Ring	2	XT and DPS Model
130l	706000567	Spring Stopper	2	XT and DPS Model
160	706201670	RH Protector	1	
190	706201669	LH Protector	1	
205	293150104	Pop Rivet 3/16"	6	
230	293370035	Circlip	4	
240	250100099	Nut M12	2	
241	706200281	HARDENED WASHER	2	
250	211400017	Cotter Pin	2	
260	207605044	HEX. FLANGED SCREW M10 X 50	2	
270	233201414	Hex. Flanged Elastic Nut M10	2	

COMMANDER 2013 STD, DPS, XT, 800R EFI / Steering

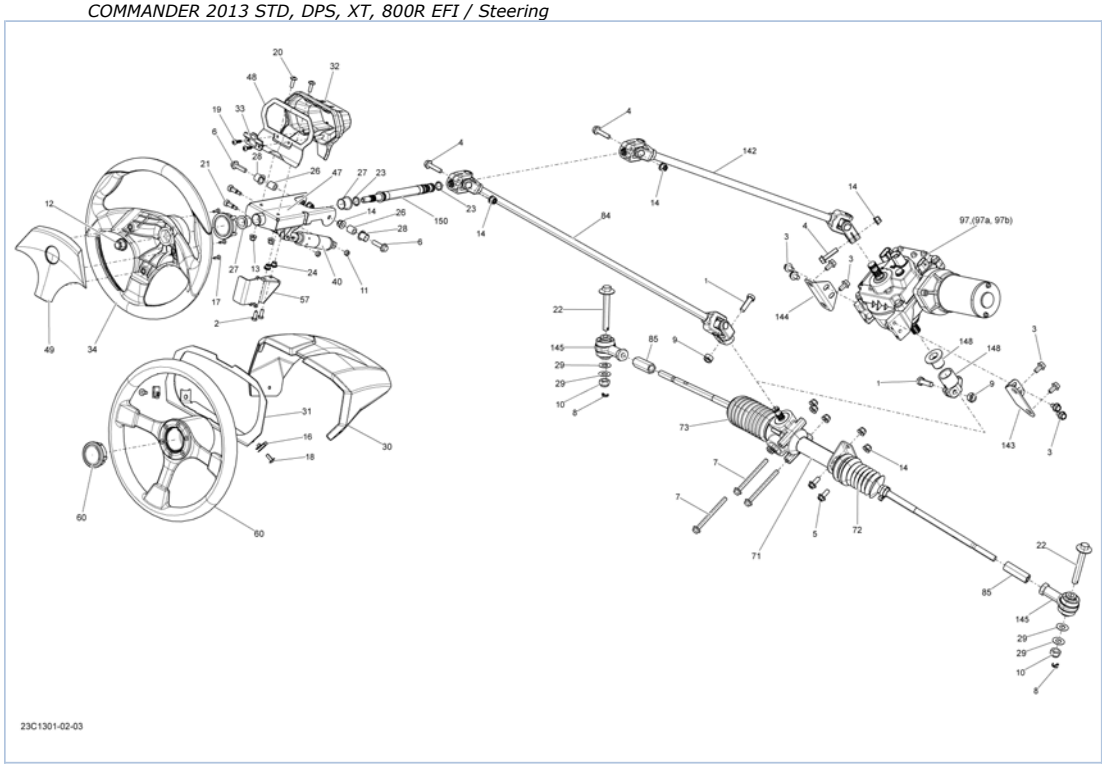

Part List

COMMANDER 2013 STD, DPS, XT, 800R EFI / Steering

ITEM	PART NUMBER	PART NAME	QUANTITY	REMARKS
1	207103586	Hex. Screw M10 X 35	1	
2	207361644	Hex. Screw M6 X 16, Scotch Grip	2	
3	207581644	Hex. Flanged Screw M8 X 16, Scotch Grip	8	
4	207583586	Hex. Flanged Screw M8 X 35, Scotch Grip	1	STD
4	207583586	Hex. Flanged Screw M8 X 35, Scotch Grip	2	XT, DPS
5	207682044	Hex. Flanged Screw M8 X 20	2	
6	207683044	Hex. Flanged Screw M8 X 30	2	
7	207689534	Hex. Flanged Scew M8 X 95	3	
8	211400017	Cotter Pin	2	
9	232500416	Elastic Stop Nut M10	1	
10	232521416	Elastic Flanged Stop Nut M12	2	
11	232561414	Elastic Stop Nut M6	2	
12	233221414	Hex. Flanged Elastic Nut M12	1	
13	233261414	Hex. Flanged Elastic Nut M6	2	
14	233281414	Hex. Flanged Elastic Nut M8	AR	
16	250000048	Pannel Nut M6 X 1.0	2	X, XT
17	250000084	Phillips Screw K40 X 16	3	STD, DPS
18	250000129	Torx Screw M6 X 16	2	X, XT
19	250000297	Truss Head Torx Screw K50 X 20	2	STD, DPS
20	250000350	Torx Truss Screw M6 X 20	2	
21	250000381	Socket Head Screw	2	
22	250000590	Hex. Cap Screw M12 X 88	2	
23	293300144	O-Ring	2	
24	293450274	Insert	2	Europe
26	293900106	Bushing	2	
27	415108000	Cushion	2	
28	705600799	Bushing	2	
29	706200281	HARDENED WASHER	4	
30	707900124	Upper Cluster Cover	1	X, XT
31	707900013	Cluster Support	1	X, XT
32	709400514	Speedometer Cover	1	STD, DPS
33	709400573	Latch Indicator Cover	1	STD, DPS
34	709400650	Steering Wheel	1	STD, DPS
40	709400656	Adjustment Cylinder	1	
47	709400655	Steering Support	1	
48	709400760	Cluster Support	1	STD, DPS
49	709400780	Steering Center	1	STD, DPS
57	709400810	Flasher Arm Support	1	Europe
60	715001134	Steering Wheel Kit	1	X, XT
71	709401195	Rack and Pinion Steering Ass'y	1	
72	715900078	RH Boot Kit	1	
73	715900077	LH Boot Kit	1	
84	709400900	Steering Column	1	STD
85	715900150	Nut Tie Rod End	2	
97	709401068	Power Steering Ass'y	1	XT, DPS
142	709401070	Steering Shaft Ass'y	1	XT, DPS
143	709401128	RH DPS Support	1	XT, DPS
144	709401129	LH DPS Support	1	XT, DPS
145	709401134	Ball Joint	2	
148	709401138	Coupling Ass'y	1	XT, DPS

150	709401167	Steering Shaft	1	
97a	709401115	DPS Calibrated Module	1	XT, DPS
97b	709401215	DPS Module Software	1	XT, DPS

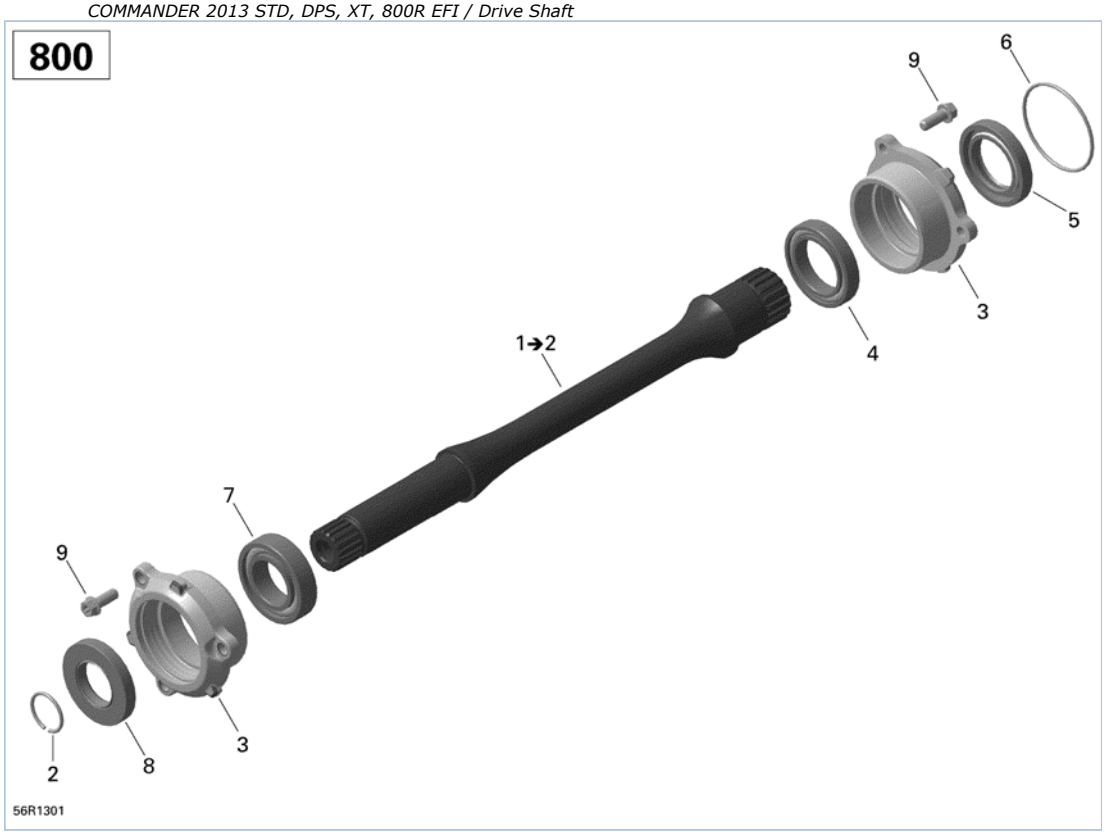
800
9
6
5
3
4
1➔2
7
9
3
8
2
56R1301

Part List

COMMANDER 2013 STD, DPS, XT, 800R EFI / Drive Shaft

ITEM	PART NUMBER	PART NAME	QUANTITY	REMARKS
1	420620517	DRIVE SHAFT ASS'Y	1	Includes 1 to 2
2	420245010	Circlip	1	
3	420611221	BEARING COVER	2	
4	420632275	Ball Bearing	1	
5	420850055	Oil Seal	1	
6	420230305	O-Ring	1	
7	420232341	Ball Bearing	1	
8	420430589	Oil Seal	1	
9	420641048	Flanged Torx Screw M6 X 16	6	

COMMANDER 2013 STD, DPS, XT, 800R EFI / Drive System, Rear

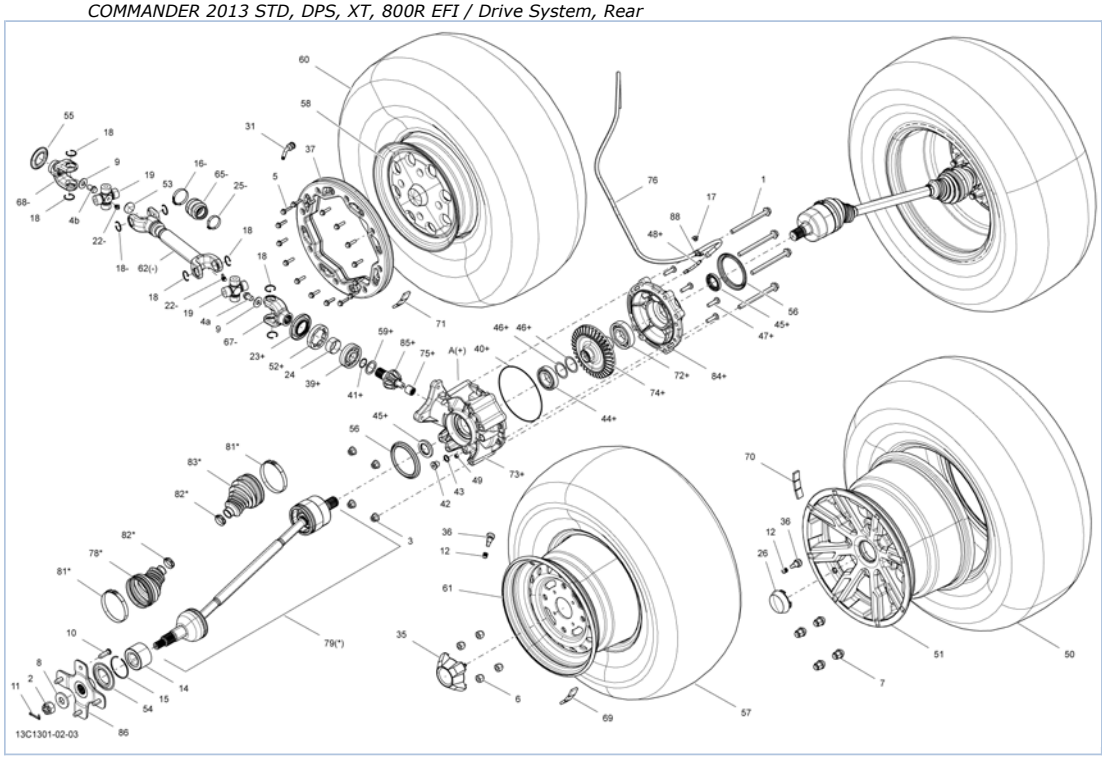

Part List

COMMANDER 2013 STD, DPS, XT, 800R EFI / Drive System, Rear

ITEM	PART NUMBER	PART NAME	QUANTITY	REMARKS
1	230602546	Hex. Flanged Screw M10 X 125	4	
2	250100047	HEX. CASTELLATED NUT M18	2	
3	233201416	Hex. Flanged Elastic Nut M10	4	
5	N/A	Not available for this vehicle	16	
6	250100042	Wheel Nut	8	
7	250100082	Chrome Wheel Nut M10 X 1.25	8	XT, DPS Model
7	250100100	Black Wheel Nut M10 X 1.26	8	XT CAMO
8	250200049	Spring Washer	2	
9	250200102	Flat Washer	2	
10	250300045	WHEEL STUD	4	
11	250400036	Cotter Pin	2	
12	293000110	Valve Cap	2	
14	293350040	CONE BEARING	2	
15	293370019	Circlip	2	
16	293650138	Oetiker Clamp	2	
17	390402200	Pop Rivet 3/16"	1	
18	715900102	Snap Ring	8	
19	715900186	U-Joint	2	
22	715900184	Nipple	2	
23	705400027	Oil Seal	1	
24	705400036	Wear Ring	1	
25	509000045	Gear Clamp	1	
26	705400504	Wheel Cap	2	XT CAMO
26	705400520	Wheel Cap	2	XT, DPS Model
31	N/A	Not available for this vehicle	1	
35	705400921	Wheel Cap	2	STD Model
36	705400193	Rim Valve with Cap	1	
37	N/A	Not available for this vehicle	1	
39	705500260	Ball Bearing	1	
40	705500265	Seal	1	
41	705500267	O-Ring	1	
42	705500504	FILL LEVEL PLUG	1	
43	705500506	Copper Washer	1	
44	705500749	Ball Bearing	1	
45	705501196	Oil Seal	2	
46	703500548	DIFFERENTIAL SHIM KIT	1	
46	703500049	Pinion Shim Kit	1	
47	705500892	Screw	4	
48	705500893	Vent Valve	1	
49	705500894	Drain Plug	1	
50	705500964	REAR TIRE	1	XT, DPS Model
50	705501295	REAR TIRE	1	XT , Europe
51	705500965	REAR RIM	1	XT, DPS Model
51	705501261	REAR RIM	1	XT CAMO
52	705500987	Nut	1	
53	715900187	Cover	1	
54	705501121	WEAR SLEEVE	1	
55	705501123	Protector	1	
56	705501124	Wear Ring	2	
57	705501129	REAR TIRE	1	STD Model
57	705501434	REAR TIRE	1	STD Europe Model
58	N/A	Not available for this vehicle	1	

59	705501162	PINION GEAR SHIM	1	
59	705500075	Pinion Gear Shim .022"	1	
60	N/A	Not available for this vehicle	1	
61	705501623	Rear Rim, Black	1	
62	705501257	Drive Axle Ass'y	1	
65	715900118	RUBBER BOOT	1	
67	715900101	Fixe Yoke	1	
68	705501373	Fixed Joint	1	
69	705501385	1/2 OZ Weight	AR	
70	705501385	1/2 OZ Weight	AR	
71	N/A	Not available for this vehicle	AR	
72	705501389	Ball Bearing	1	
73	705501395	PINION REAR COVER	1	
74	705501397	Gear, 36 Tooth	1	
75	705501408	Needle Bearing	1	
76	415080200	Hose, Polyurethane	AR	
78	XXX	BOOT KIT	2	
79	705501481	Half Shaft	2	
81	XXX	Oetiker Clamp (27,5mm)	1	
82	XXX	Oetiker Clamp (81mm)	1	
83	XXX	BOOT KIT	2	
84	705501507	Rear Differential Cover	1	
85	705501571	Pinion 10 Tooth	1	
86	705501713	WHEEL HUB ASS'Y	1	
88	705600459	Clamp	1	
4a	250000378	Hex Flanged Screw S.Grip M12 X 16	1	
4b	250000359	Hex Flanged Screw M12 x 16	1	
A	705501506	Differential Ass'y	1	

COMMANDER 2013 STD, DPS, XT, 800R EFI / Rear Suspension

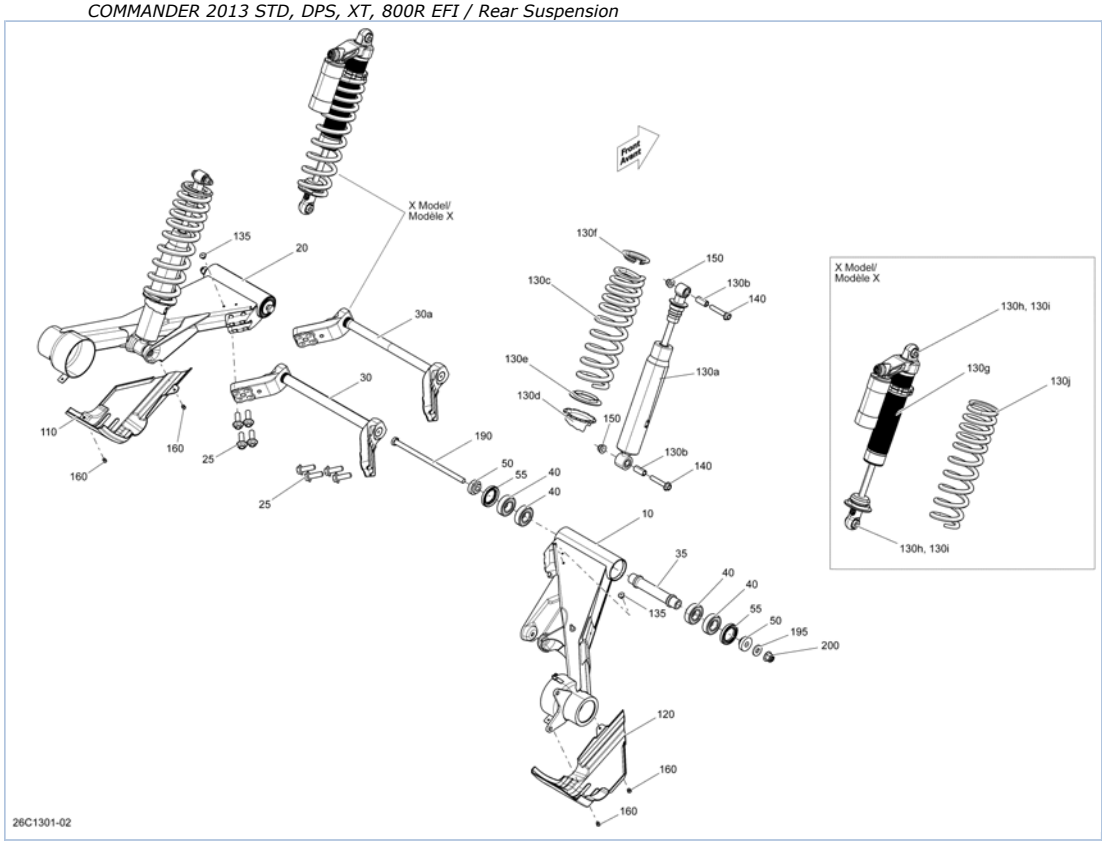

Part List

COMMANDER 2013 STD, DPS, XT, 800R EFI / Rear Suspension

ITEM	PART NUMBER	PART NAME	QUANTITY	REMARKS
10	706001318	RH Swing Arm	1	
20	706001319	LH Swing Arm	1	
25	207523544	Hex. Flanged Screw M12 X 35, Scotch Grip	8	
30	706001322	Sway Bar	1	
30a	N/A	Not available for this vehicle	1	
35	706000616	Pivot Bushing	2	
40	293350055	Ball Bearing	8	
50	706000629	Spacer	4	
55	293200094	Seal	4	
110	706000630	LH Joint Protector	1	
120	706000814	RH Joint Protector	1	
130a	706000615	Rear Shock Ass'y	2	Inclus 130a to 130b
130b	715900122	Bushing	4	
130c	706001043	Rear Spring, Blue-Yellow	2	STD Model
130c	706000667	Rear Spring, Blue-Gold	2	XT Yellow Model
130c	706001045	Rear Spring, Green-Yellow	2	XT Magnesium Model
130c	706001045	Rear Spring, Green-Yellow	2	XT Camo Model
130c	706001043	Rear Spring, Blue-Yellow	2	XT Red Model
130c	706000667	Rear Spring, Blue-Gold	2	DPS Model
130d	706000910	Adjustable Ring	2	
130e	706000911	Protector Ring	2	
130f	706000567	Spring Stopper	2	
130g	N/A	Not available for this vehicle	2	
130h	N/A	Not available for this vehicle	8	
130i	N/A	Not available for this vehicle	8	
130j	N/A	Not available for this vehicle	2	
135	390406500	Pop Rivet 3/16"	2	
140	207605544	HEX. FLANGED SCREW M10 X 55	4	
150	233201416	Hex. Flanged Elastic Nut M10	4	
160	293150104	Pop Rivet 3/16"	4	
190	250000515	Hex. Cap Screw M12 X 241	2	
195	250200120	Flat Washer M12	2	
200	233221416	Elastic Flange Nut M12	2	

COMMANDER 2013 STD, DPS, XT, 800R EFI / Body And Accessories

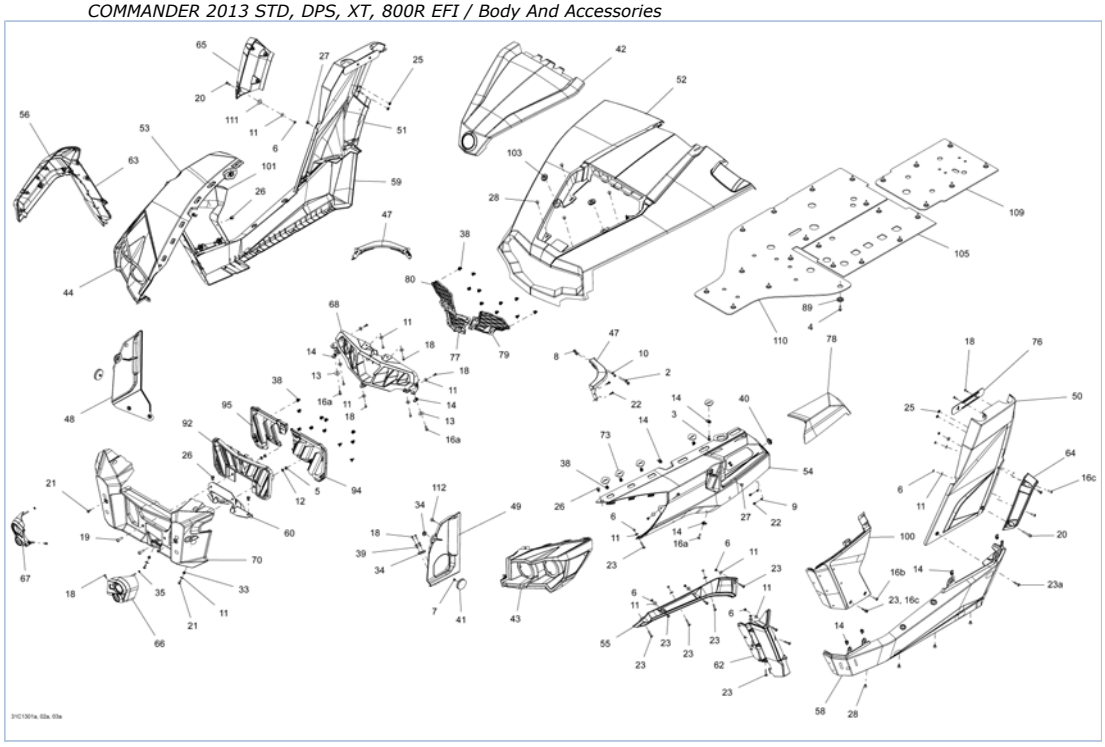

Part List

COMMANDER 2013 STD, DPS, XT, 800R EFI / Body And Accessories

ITEM	PART NUMBER	PART NAME	QUANTITY	REMARKS
2	207661644	Hex. Flanged Screw M6 X 16	4	
3	207662044	Hex. Flanged Screw M6 X 20	2	
4	210262080	Hex. Forming Screw M6 X 20	24	
5	232081414	Hex. Nut M8	2	STD, DPS, X
6	232561434	Elastic Stop Nut M6	AR	
7	233251414	Hex. Flanged Elastic Nut M5	2	Except Europe
8	233261414	Hex. Flanged Elastic Nut M6	AR	
9	234051410	Flat Washer M5	4	
10	234061600	Flat Washer M6, Stainless	4	
11	234062670	Flat Washer	AR	
12	234081410	Flat Washer 8 mm	2	STD, DPS, X
13	234082410	Flat Washer 8 mm	2	
14	250000048	Pannel Nut M6 X 1.0	AR	
16a	250000128	Torx Truss Screw M6 X 20	2	
16b	250000350	Torx Truss Screw M6 X 20	2	
16c	250000488	Torx Truss Screw M6 X 20	7	XT Except Europe, LTD Except Europe
18	250000146	Truss Head Torx Screw K50 X 16	AR	
19	250000197	Torx Truss Screw M8 X 30	2	STD, DPS, X
20	250000215	Torx Screw M6 X 45	AR	
21	250000261	Torx Screw M6 X 16	4	
22	250000297	Truss Head Torx Screw K50 X 20	AR	
23	250000371	Torx Screw M6 X 30 Stainless	AR	XT
23a	250000398	Stainless Torx Screw,Nylon Patch,M6 X 30	2	
25	250100129	Push Nut	5	XT
26	293150089	Tuflok Plastic Rivet	AR	
27	293150104	Pop Rivet 3/16"	2	
28	293150104	Pop Rivet 3/16"	AR	
33	293450274	Insert	2	
34	293720053	Grommet	6	
35	389804300	Push Nut	2	Europe
38	517302785	Clip	AR	
39	517303439	Knob	4	
40	517303756	Grommet	1	
41	705002409	Reflector, Amber	2	Except Europe
42	705002881	Removable Hood, Yellow	1	Yellow
42	705004384	Removable Hood, Red	1	Red
42	705004385	Removable Hood, Camo	1	CAMO
42	705005291	Removable Hood, Magnesium	1	Magnesium
42	705006058	Removable Hood, Graphite	1	Black Carbon Fiber
43	705002885	LH Front Facia	1	
44	705002886	RH Front Facia	1	
47	705002891	Facia Front Support	2	
48	705002895	LH Deflector	1	STD, DPS, X
48	705005113	LH Deflector	1	XT
49	705002894	RH Deflector	1	
50	705002904	LH Rear Lateral Pannel, Yellow	1	DPS
50	705002904	LH Rear Lateral Pannel, Yellow	1	XT Yellow
50	705003850	LH Rear Lateral Pannel, Red	1	XT Red
50	705004396	LH Rear Lateral Pannel, Camo	1	CAMO
50	705005297	LH Rear Lateral Pannel,	1	Magnesium

		Magnesium		
50	705006066	LH Rear Lateral Pannel, Red	1	STD
50	705006068	LH Rear Lateral Pannel, Graphite	1	Black Carbon Fiber
51	705002905	RH Rear Lateral Pannel, Yellow	1	DPS
51	705002905	RH Rear Lateral Pannel, Yellow	1	XT Yellow
51	705003851	RH Rear Lateral Pannel, Red	1	XT Red
51	705004395	RH Rear Lateral Pannel, Camo	1	CAMO
51	705005299	RH Rear Lateral Pannel, Magnesium	1	Magnesium
51	705006067	RH Rear Lateral Pannel, Red	1	STD
51	705006069	RH Rear Lateral Pannel, Graphite	1	Black Carbon Fiber
52	705002915	Fixed Hood, Yellow	1	Yellow
52	705004379	Fixed Hood, Red	1	Red
52	705004380	Fixed Hood, Camo	1	CAMO
52	705005289	Fixed Hood, Magnesium	1	Magnesium
52	705006056	Fixed Hood, Metallic Black	1	Black Carbon Fiber
53	705003029	RH Front Fender, Yellow	1	DPS
53	705003029	RH Front Fender, Yellow	1	XT Yellow
53	705003827	RH Front Fender, Red	1	XT Red
53	705004375	RH Front Fender, Camo	1	CAMO
53	705005285	RH Front Fender, Magnesium	1	Magnesium
53	705006051	RH Front Fender, Red	1	STD
53	705006053	RH Front Fender, Graphite	1	Black Carbon Fiber
54	705003030	LH Front Fender, Yellow	1	DPS
54	705003030	LH Front Fender, Yellow	1	XT Yellow
54	705003826	LH Front Fender, Red	1	XT Red
54	705004376	LH Front Fender, Camo	1	CAMO
54	705005283	LH Front Fender, Magnesium	1	Magnesium
54	705006049	LH Front Fender, Graphite	1	Black Carbon Fiber
54	705006050	LH Front Fender, Red	1	STD
55	705003058	LH Upper Front Mudguards	1	XT
56	705003059	RH Upper Front Mudguards	1	XT
58	705004989	LH Middle Side Pannel	1	XT
58	705005946	LH Middle Side Pannel	1	STD, DPS
59	705004990	RH Middle Side Pannel	1	XT
59	705005947	RH Middle Side Pannel	1	STD, DPS
60	705003399	Bottom Deflector	1	STD, DPS, X
62	705003601	LH Lower Front Mudguards	1	XT
63	705003602	RH Lower Front Mudguards	1	XT
64	705003605	LH Lower Rear Mudguards	1	XT
65	705003606	RH Lower Rear Mudguards	1	XT
66	705003627	LH Flasher Cap	1	Europe
67	705003628	RH Flasher Cap	1	Europe
68	705003629	Upper Facia, Black	1	
70	705003306	FRONT FACIA	1	
73	705003841	Support Plate	12	
76	705004261	Support Plate	2	
77	705004336	Center Upper Facia Protector	1	
78	705004337	CVT Inlet Cover, Yellow	1	Yellow
78	705004381	CVT Inlet Cover, Red	1	Red
78	705004382	CVT Inlet Cover, Camo	1	CAMO
78	705005287	CVT Inlet Cover, Magnesium	1	Magnesium
78	705006055	CVT Inlet Cover, Graphite	1	Black Carbon Fiber
79	705004350	LH Upper Facia Protector	1	
80	705004351	RH Upper Facia Protector	1	
89	705004510	Cup	24	

92	705004755	Lower Front Facia Protector	1	
94	705004819	LH Lower Rear Facia Protector	1	
95	705004820	RH Lower Rear Facia Protector	1	
100	705002887	LH Front Lateral Pannel, Yellow	1	DPS
100	705002887	LH Front Lateral Pannel, Yellow	1	XT Yellow
100	705004996	LH Front Lateral Pannel, Red	1	XT Red
100	705005559	LH Front Lateral Pannel, Red	1	STD
100	705006060	LH Front Lateral Pannel, Graphite	1	Black Carbon Fiber
100	705006378	LH Front Lateral Pannel, Camo	1	CAMO
100	705006382	LH Front Lateral Pannel, Magnesium	1	Magnesium
101	705002888	RH Front Lateral Pannel, Yellow	1	DPS
101	705002888	RH Front Lateral Pannel, Yellow	1	XT Yellow
101	705004997	RH Front Lateral Pannel, Red	1	XT Red
101	705005558	RH Front Lateral Pannel, Red	1	STD
101	705006063	RH Front Lateral Pannel, Graphite	1	Black Carbon Fiber
101	705006379	RH Front Lateral Pannel, Camo	1	CAMO
101	705006383	RH Front Lateral Pannel, Magnesium	1	Magnesium
103	705005156	Oval Washer	2	
105	705006075	RH Protector Plate	1	
109	705006074	Rear Protector Plate	1	
110	705005415	LH Protector Plate	1	
111	706200281	HARDENED WASHER	1	XT
112	708000759	Rubber Stopper	2	

COMMANDER 2013 STD, DPS, XT, 800R EFI / Body And Accessories Kit

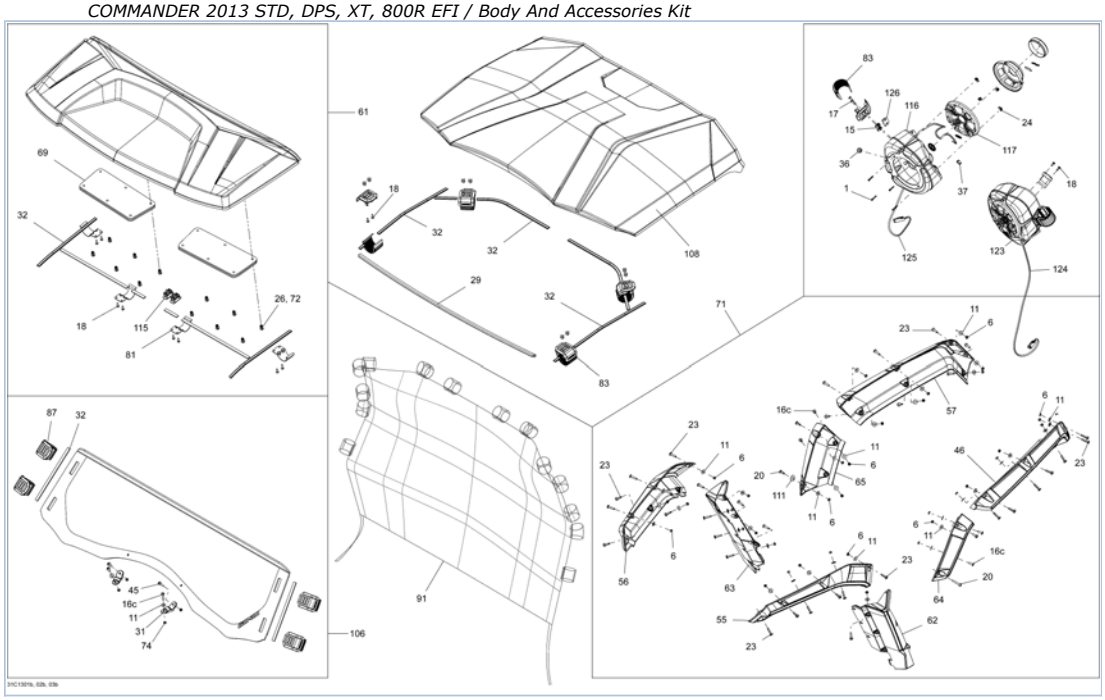

Part List

COMMANDER 2013 STD, DPS, XT, 800R EFI / Body And Accessories Kit

ITEM	PART NUMBER	PART NAME	QUANTITY	REMARKS
1	N/A	Not available for this vehicle	-	
6	232561434	Elastic Stop Nut M6	AR	XT
11	234062670	Flat Washer	AR	XT
15	N/A	Not available for this vehicle	-	
16c	250000488	Torx Truss Screw M6 X 20	7	XT
17	N/A	Not available for this vehicle	-	
18	N/A	Not available for this vehicle	-	
20	250000215	Torx Screw M6 X 45	AR	XT
23	250000371	Torx Screw M6 X 30 Stainless	AR	XT
24	N/A	Not available for this vehicle	-	
26	N/A	Not available for this vehicle	-	
29	N/A	Not available for this vehicle	-	
31	N/A	Not available for this vehicle	-	
32	N/A	Not available for this vehicle	-	
36	N/A	Not available for this vehicle	-	
37	N/A	Not available for this vehicle	-	
45	N/A	Not available for this vehicle	-	
46	705003603	LH Upper Rear Mudguards	1	XT
55	705003058	LH Upper Front Mudguards	1	XT
56	705003059	RH Upper Front Mudguards	1	XT
57	705003604	RH Upper Rear Mudguards	1	XT
61	N/A	Not available for this vehicle	-	
62	705003601	LH Lower Front Mudguards	1	XT
63	705003602	RH Lower Front Mudguards	1	XT
64	705003605	LH Lower Rear Mudguards	1	XT
65	705003606	RH Lower Rear Mudguards	1	XT
69	N/A	Not available for this vehicle	-	
71	715001013	Fender Extension Kit	1	XT
72	N/A	Not available for this vehicle	-	
74	N/A	Not available for this vehicle	-	
81	N/A	Not available for this vehicle	-	
83	N/A	Not available for this vehicle	-	
87	N/A	Not available for this vehicle	-	
91	N/A	Not available for this vehicle	-	
106	N/A	Not available for this vehicle	-	
108	N/A	Not available for this vehicle	-	
111	706200281	HARDENED WASHER	1	XT
115	N/A	Not available for this vehicle	-	
116	N/A	Not available for this vehicle	-	
117	N/A	Not available for this vehicle	-	
123	N/A	Not available for this vehicle	-	
124	N/A	Not available for this vehicle	-	
125	N/A	Not available for this vehicle	-	
126	N/A	Not available for this vehicle	-	

COMMANDER 2013 STD, DPS, XT, 800R EFI / Cab Interior

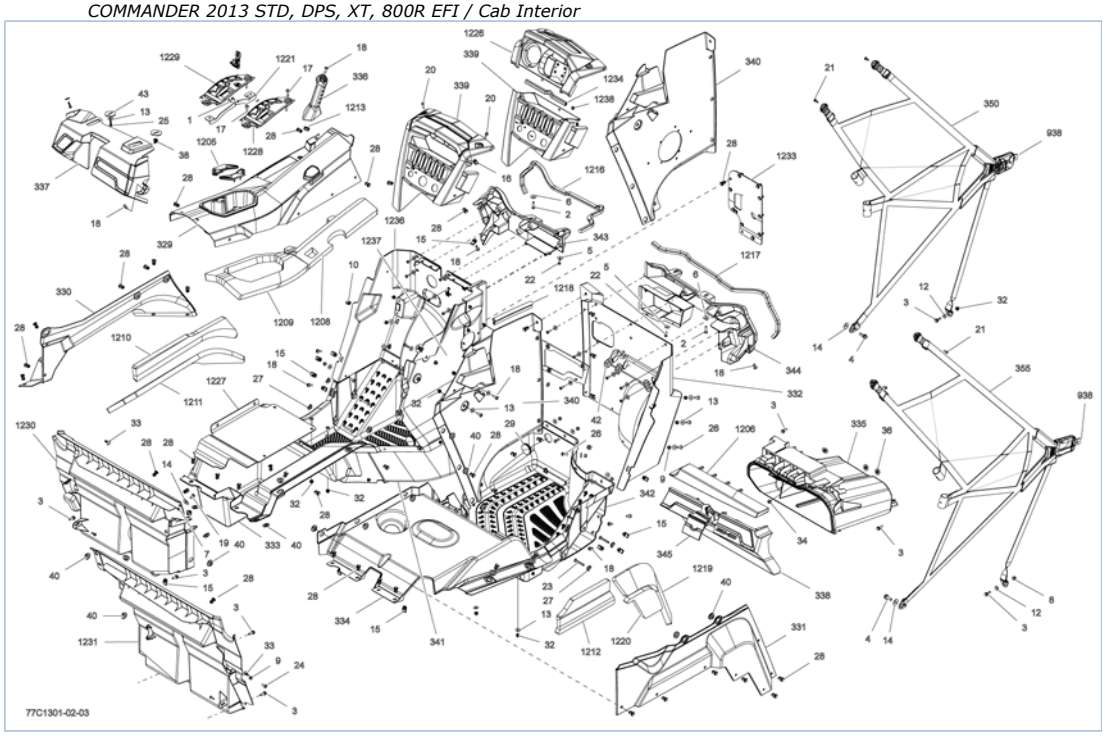

Part List

COMMANDER 2013 STD, DPS, XT, 800R EFI / Cab Interior

ITEM	PART NUMBER	PART NAME	QUANTITY	REMARKS
1	205951046	SOCKET HEAD SCREW M5 X 10	2	
2	207162544	Hex. Screw M6 X 25	2	
3	207662034	Hex. Flanged Screw	AR	
4	207682544	Hex. Flanged Screw M8 X 25	2	
5	224060201	Flat Washer	1	
6	224061201	Flat Washer	2	
7	232061600	Hex. Nut M6	2	
8	233261414	Hex. Flanged Elastic Nut M6	1	
9	233261494	Hex. Elastic Flanged Nut M6	10	
10	233281414	Hex. Flanged Elastic Nut M8	2	
12	234062410	Flat Washer 6 mm	2	
13	234062670	Flat Washer	6	
14	234082410	Flat Washer 8 mm	4	
15	250000048	Pannel Nut M6 X 1.0	2	
16	250000079	Panel Nut M5 X 0.8	2	
17	250000081	Torx Screw M6 X 25	2	
18	250000128	Torx Truss Screw M6 X 20	1	
19	250000129	Torx Screw M6 X 16	2	
20	250000130	Torx Screw M5 X 20	2	
21	250000145	Torx Screw M5 X 14	4	
22	250000146	Truss Head Torx Screw K50 X 16	1	
23	250000215	Torx Screw M6 X 45	2	
24	250000261	Torx Screw M6 X 16	1	
25	250000297	Truss Head Torx Screw K50 X 20	2	
26	250000335	Socket Head Screw M6 X 20	9	
27	293100003	Nut M6	2	
28	293150089	Tuflok Plastic Rivet	2	
29	293250242	Rubber Cover	1	
32	293450274	Insert	10	
33	293730011	Dart, Black	1	
34	293830005	Rubber Plug	1	
36	414859400	Cap	3	
38	517302785	Clip	1	
40	705003264	Grommet	3	
42	705003668	Oblong Grommet	4	
43	705003841	Support Plate	2	
329	715001247	Central Console Ass'y	1	
329	715001249	Central Console Ass'y	1	Europe
330	707900001	LH Side Console	1	
331	707900002	RH Side Console	1	
332	707900004	RH Front Floor	1	
333	715001264	LH Under Cover Ass'y	1	
334	707900006	RH Under Cover Ass'y	1	
335	707900046	Storage Bin	1	XT, LTD Model
335	707900009	Storage Bin	1	STD, DPS, X model
336	707900011	Passenger Handle	1	
337	715001250	Dashboard Ass'y	1	
338	715001263	Bin Cover Ass'y	1	
339	715001265	Central Dashboard Ass'y	1	
339	715900108	Central Dashboard Ass'y	1	Europe
340	707900021	RH Fixe Side Console	1	
341	707900022	LH Lower Floor	1	
342	707900023	RH Lower Floor	1	

343	707900029	LH Floor Support	1	
344	707900030	RH Floor Support	1	
345	707900031	Latch	1	
350	707900127	LH Lateral Net	1	
355	707900128	RH Lateral Net	1	
938	707900035	Buckle	1	
1205	707900036	Cup Retainer	2	
1206	707900062	Trim Glove Box	1	
1208	707900041	Front Central Console Foam	1	
1209	707900042	Rear Central Console Foam	1	
1210	707900043	LH Upper Lateral Console Foam	1	
1211	707900044	LH Lower Lateral Console Foam	1	
1212	707900045	RH Lateral Console Foam	1	
1213	707900048	CONNECTOR TUBE	1	
1216	293200093	Neoprene Seal	AR	
1217	293200093	Neoprene Seal	AR	
1218	293250240	Neoprene Seal	AR	
1219	707900055	RH Lateral Console Foam	1	
1220	707900056	RH Lateral Console Foam	1	
1221	707900058	LOCK SUPPORT	1	
1226	707900066	Gauge Support	1	
1227	707900069	Under Cover Seat	1	
1228	707900070	LEVER INDICATOR	1	
1228	707900071	LEVER INDICATOR	1	Europe
1229	707900070	LEVER INDICATOR	1	
1229	707900071	LEVER INDICATOR	1	Europe
1230	707900092	LH Rear Deflector	1	
1231	707900094	RH Rear Deflector	1	
1233	707900108	Deflector	1	STD Model
1233	707900125	Deflector	1	
1234	N/A	Not available for this vehicle	1	LTD
1236	707900134	LH Front Floor	1	
1237	707900136	LH Lateral Console	1	
1238	N/A	Not available for this vehicle	3	LTD

COMMANDER 2013 STD, DPS, XT, 800R EFI / Decals

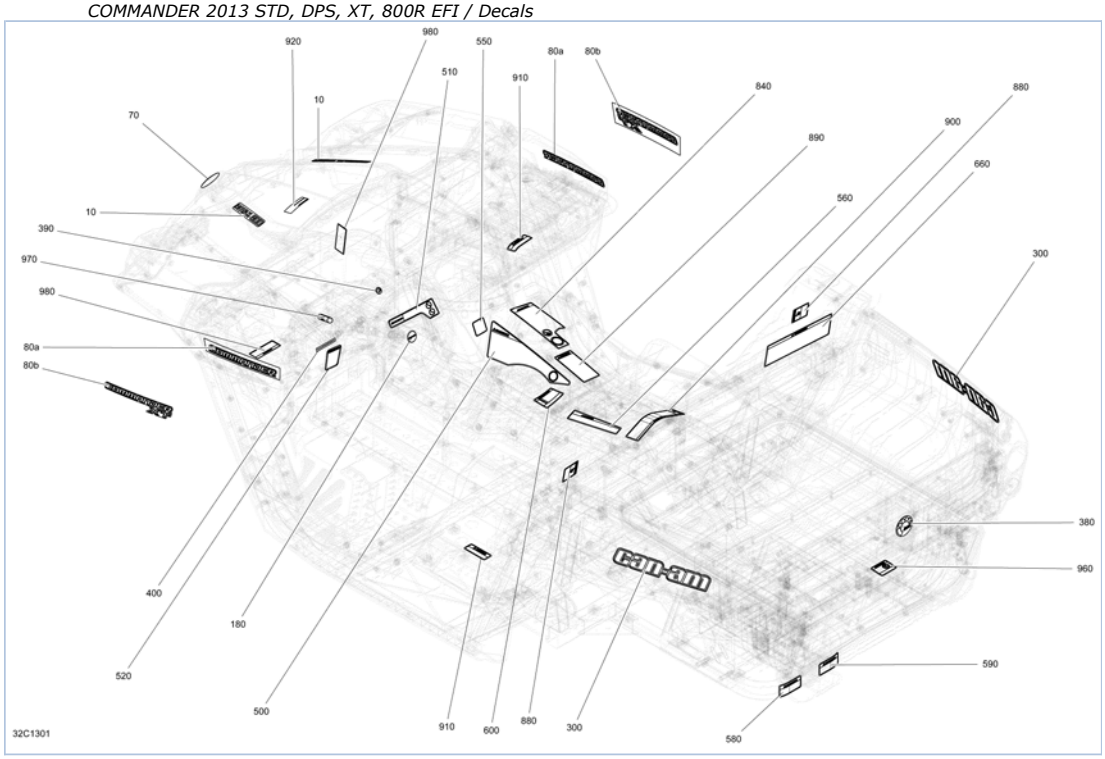

Part List

COMMANDER 2013 STD, DPS, XT, 800R EFI / Decals

ITEM	PART NUMBER	PART NAME	QUANTITY	REMARKS
10	704902850	Hood Decal, Rotax 800	2	Yellow Model
10	704902855	Hood Decal, Rotax 800	2	Camo Model
10	704902856	Hood Decal, Rotax 800	2	Magnesium Model
10	704902996	Hood Decal, Rotax 800	2	Red Model
70	219902469	Logo BRP, 68 mm	1	
80a	704902999	Lateral Decal, Commander	2	STD
80a	704902310	Lateral Decal, Commander	2	DPS Model
80b	704902311	Lateral Decal, Commander XT	2	XT Yellow Model
80b	704903510	Lateral Decal, Commander XT	2	XT Camo Model
80b	704902716	Lateral Decal, Commander XT	2	XT Magnesium Model
180	704902065	Logo Can-Am, 35 mm	1	
300	704902320	Decal, Can-Am	2	Yellow Model
300	704902321	Decal, Can-Am	2	Red Model
300	704902508	Decal, Can-Am	2	Camo Model
300	704902717	Decal, Can-Am	2	Magnesium Model
380	219902469	Logo BRP, 68 mm	1	
390	219902677	Logo BRP, 20 mm	1	XT Model
400	704901558	Decal, Dynamic Power Steering	1	Except STD
500	704902328	Warning Decal, Death And Injuries	1	Except Europe
500	704902423	Warning Decal, Death And Injuries	1	Europe
510	704902414	Warning Decal, Responsible	1	
520	704902332	Warning Decal, Vehicle	1	
550	704902407	Decal, Public Roads Use	1	Except Europe
560	704902334	Warning Decal, Tire Pressure	1	Except Europe
560	704902425	Warning Decal, Tire Pressure	1	Europe
580	704902336	Warning Decal, Towing	1	Except Europe
580	704902436	Warning Decal, Towing	1	Europe
590	704902345	Warning Decal, Trailer	1	
600	704902338	Warning Decal, Transmission	1	
660	704902343	Warning Decal, Cargo Box	1	
840	704902347	Warning Decal, Passenger	1	
880	704902350	Warning Decal, Injury	2	
890	704902491	Warning Decal, Road Usage	1	Europe
900	704902422	Warning Decal, Multilingual	1	Except North America
910	704902434	Caution Decal, Maximum Load	2	
920	707800373	Decal, Air Filter Maintenance	1	
960	704902420	Warning Decal, MAX 100 kg/222 lb	1	
970	704903434	Notice Decal, Steering	1	Except STD
980	704903515	Warning Decal, Ground And DPS	2	

COMMANDER 2013 STD, DPS, XT, 800R EFI / Frame

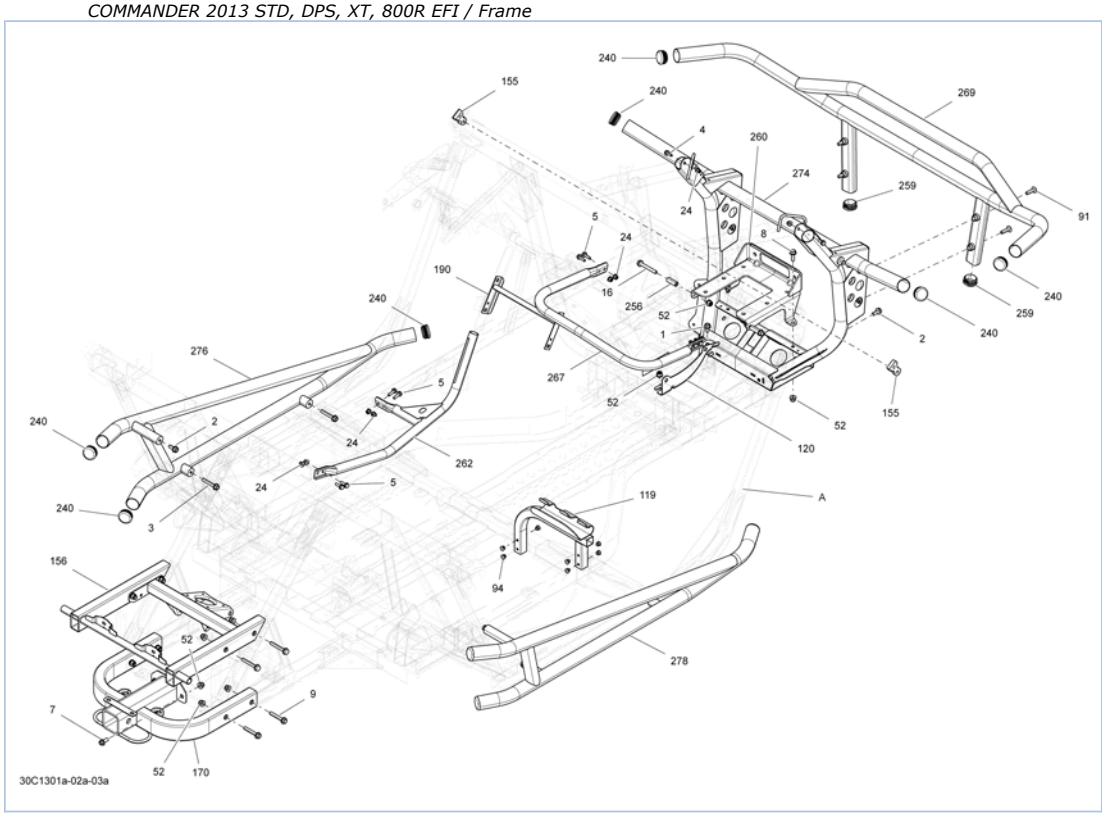

Part List

COMMANDER 2013 STD, DPS, XT, 800R EFI / Frame

ITEM	PART NUMBER	PART NAME	QUANTITY	REMARKS
1	207581644	Hex. Flanged Screw M8 X 16, Scotch Grip	1	
2	207582044	Hex. Flanged Screw M8 X 20, Scotch Grip	2	
3	N/A	Not available for this vehicle	2	
4	207661644	Hex. Flanged Screw M6 X 16	2	
5	207662044	Hex. Flanged Screw M6 X 20	4	
7	207682044	Hex. Flanged Screw M8 X 20	2	
8	207682544	Hex. Flanged Screw M8 X 25	2	XT Model
9	207685044	HEX. FLANGED SCREW M8 X 50	4	
16	207686044	Hex. Flanged Screw M8 x 60	2	XT Model
24	233261414	Hex. Flanged Elastic Nut M6	6	
52	233281414	Hex. Flanged Elastic Nut M8	11	
91	250000197	Torx Truss Screw M8 X 30	4	XT Model
94	293150096	Hemlock Rivet, 6.5 mm	7	
119	715001721	Frame Ass'y	1	
120	705201721	Front Differential Support	1	
155	705202129	Binding Plate	2	
156	705202165	Box holder	1	
170	715001251	Trailer Hitch Ass'y	1	
190	705202463	Panel Reinforcement	1	
240	705202455	Cap	2	XT Model
256	705202499	Bushing	2	XT Model
259	N/A	Not available for this vehicle	2	
260	715000704	WINCH PLATE	1	XT Model
262	705202946	Console Handle	1	
267	705202950	Passenger Handle	1	
269	715000958	Front Bumper, XT, X	1	XT Model
274	705202995	Front Bumper	1	
276	N/A	Not available for this vehicle	1	
278	N/A	Not available for this vehicle	1	
A	715001721	Frame Ass'y	1	

COMMANDER 2013 STD, DPS, XT, 800R EFI / Frame Safety Cage

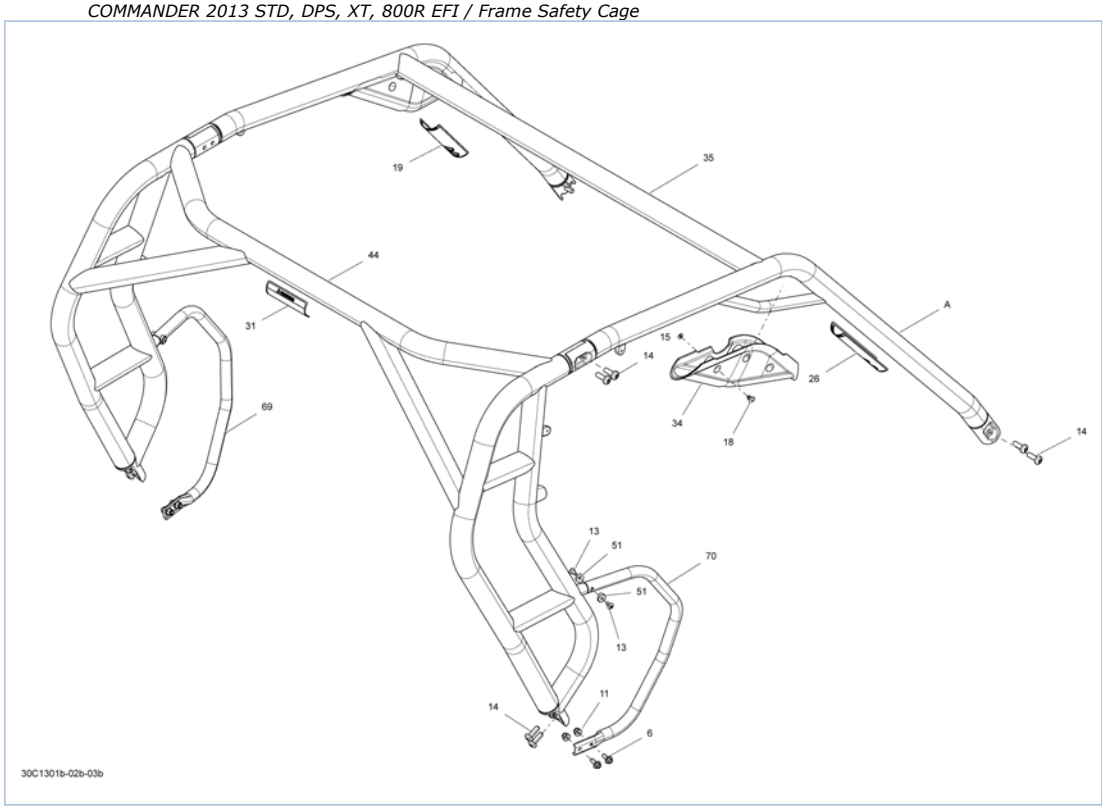

Part List

COMMANDER 2013 STD, DPS, XT, 800R EFI / Frame Safety Cage

ITEM	PART NUMBER	PART NAME	QUANTITY	REMARKS
6	207682044	Hex. Flanged Screw M8 X 20	4	
11	233281414	Hex. Flanged Elastic Nut M8	4	
13	250000439	Torx Truss Screw M6 X 14	4	
14	250000624	Screw Torx M10 X 30	12	
15	250200121	Flat Washer	6	
18	293150108	Pop Rivet 3/16"	6	
19	704902413	Warning Label	1	
26	704902415	Warning Label	1	
31	704902424	Warning Label	1	
34	705004985	LH Cage Cap Moulding	1	
34	705004986	RH Cage Cap Moulding	1	
35	XXX	Front Cage	1	
44	XXX	Rear Cage	1	
51	705202223	Offset Washer	4	
69	705202944	LH Side Protecting Tube	1	
70	705202943	RH Side Protecting Tube	1	
A	705203074	Cage Kit	1	

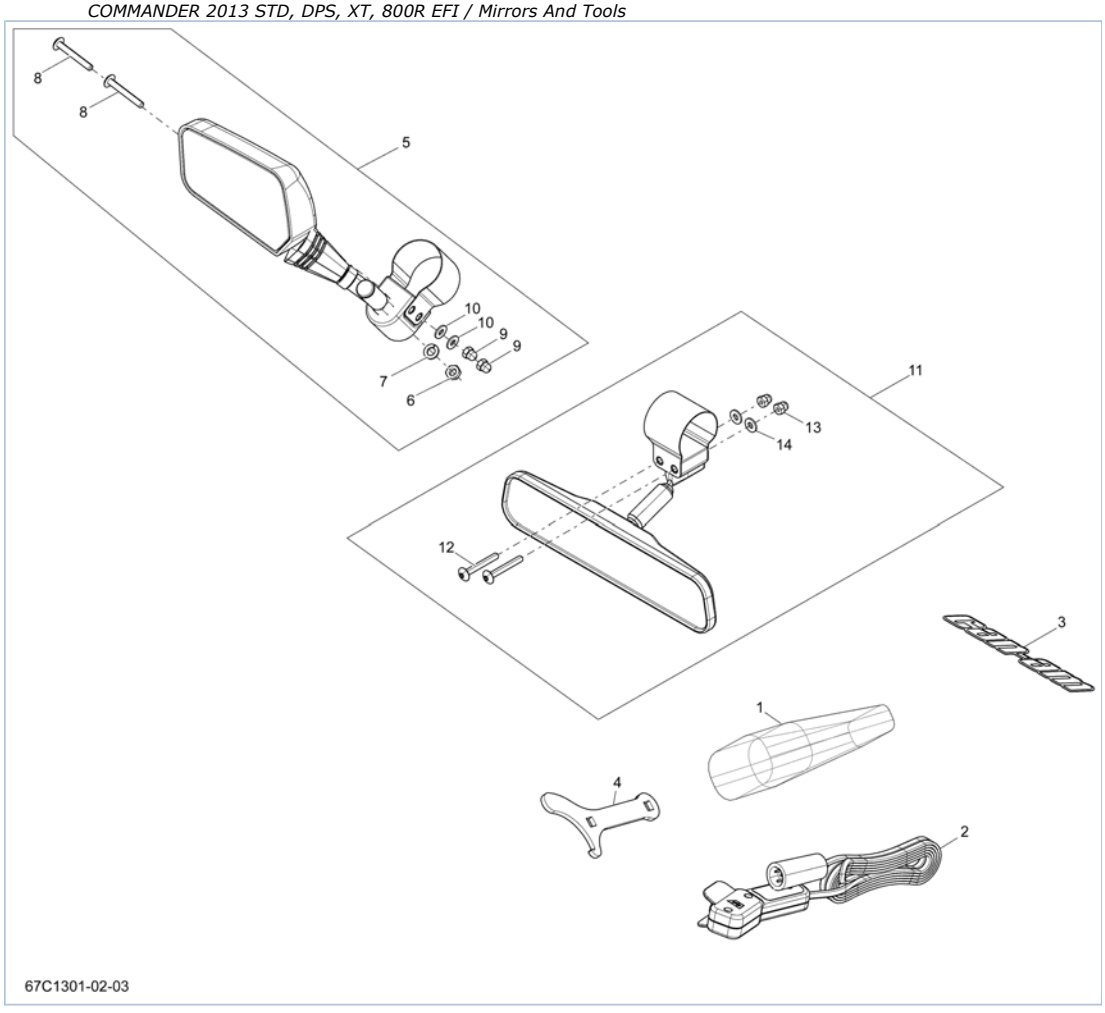
8
8
5
10
10
9
9
7
6
11
13
14
12
3
1
4
2
67C1301-02-03

Part List

COMMANDER 2013 STD, DPS, XT, 800R EFI / Mirrors And Tools

ITEM	PART NUMBER	PART NAME	QUANTITY	REMARKS
1	704700148	Tool Kit	1	
2	710001002	Remote Control	1	XT
3	N/A	Not available for this vehicle	1	
4	529000057	Adjustment Wrench	1	
5	708200182	Left Mirror Kit	1	Europe, Includes 5 to 10
6	232180600	HEX. JAM NUT M8	1	
7	234181401	Lock Washer 8 mm	1	
8	250000215	Torx Screw M6 X 45	2	
9	232361493	Domed Nut M6	2	
10	250200039	Flat Washer	2	
11	708200183	Center Mirror Kit	1	Europe, Includes 11 to 14
12	250000215	Torx Screw M6 X 45	2	
13	232361493	Domed Nut M6	2	
14	250200039	Flat Washer	2	

COMMANDER 2013 STD, DPS, XT, 800R EFI / Rear Cargo Box

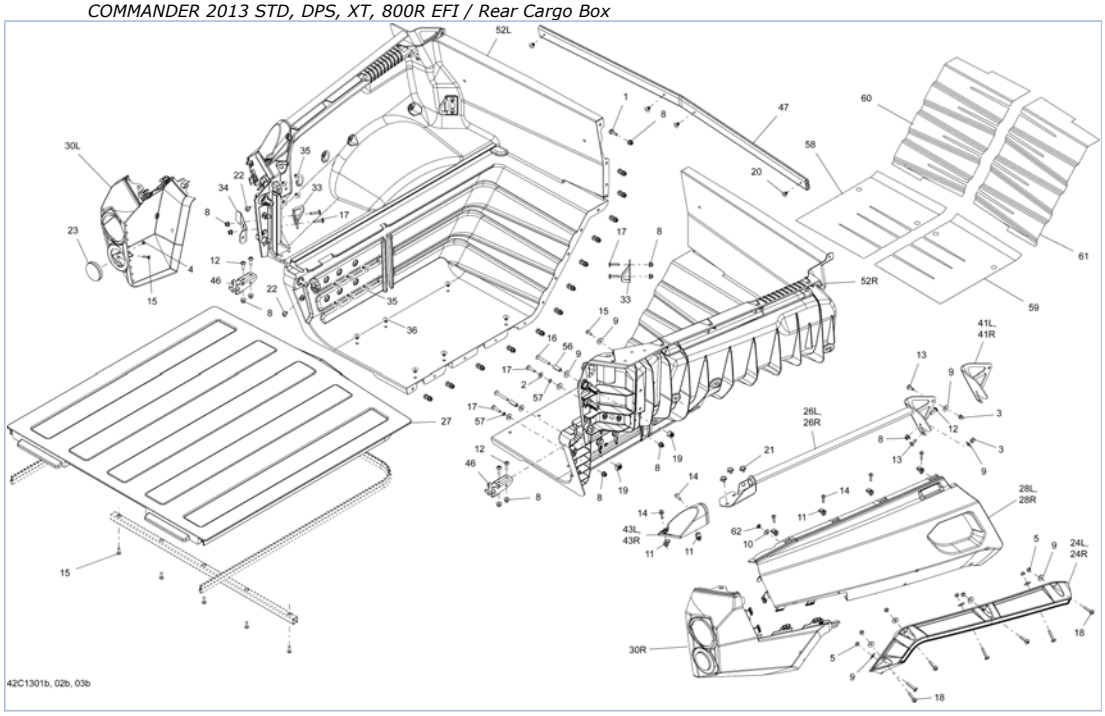

Part List

COMMANDER 2013 STD, DPS, XT, 800R EFI / Rear Cargo Box

ITEM	PART NUMBER	PART NAME	QUANTITY	REMARKS
1	207662044	Hex. Flanged Screw M6 X 20	13	
2	224061121	Flat Washer	2	
3	232361493	Domed Nut M6	4	
4	232551414	Elastic Stop Nut M5	2	North America, International
5	232561434	Elastic Stop Nut M6	14	XT Except Europe, LTD Except Europe
5	232561434	Elastic Stop Nut M6	14	Black Carbon Fiber
8	233261414	Hex. Flanged Elastic Nut M6	31	
9	234062670	Flat Washer	27	
10	234081100	Flat Washer 8 mm, Nylon	2	
11	250000079	Panel Nut M5 X 0.8	10	
11	250000079	Panel Nut M5 X 0.8	2	XT
12	250000128	Torx Truss Screw M6 X 20	6	
13	250000129	Torx Screw M6 X 16	12	
14	250000130	Torx Screw M5 X 20	10	
14	250000130	Torx Screw M5 X 20	2	XT
15	250000146	Truss Head Torx Screw K50 X 16	15	
16	250000215	Torx Screw M6 X 45	4	
17	250000284	Torx Screw M6 X 25	12	
18	250000371	Torx Screw M6 X 30 Stainless	14	XT Except Europe, LTD Except Europe
18	250000371	Torx Screw M6 X 30 Stainless	14	Black Carbon Fiber
19	269500725	Nut Housing Ass'y	4	
20	293150104	Pop Rivet 3/16"	4	
21	293150190	POP RIVET 3/16	6	XT
22	293830005	Rubber Plug	4	
23	705002408	Reflector, Red	2	Europe
24L	705003603	LH Upper Rear Mudguards	1	Black Carbon Fiber
24L	705003603	LH Upper Rear Mudguards	1	XT Except Europe, LTD Except Europe
24R	705003604	RH Upper Rear Mudguards	1	Black Carbon Fiber
24R	705003604	RH Upper Rear Mudguards	1	XT Except Europe, LTD Except Europe
26L	708300231	LH Welded Rail	1	XT
26R	708300232	RH Welded Rail	1	XT
27	708300131	Separator Pannel Ass'y	1	
28L	708300101	LH Rear Fender, Yellow	1	DPS
28L	708300101	LH Rear Fender, Yellow	1	XT Yellow
28L	708300226	LH Rear Fender, Red	1	XT Red
28L	708300437	LH Rear Fender, Camo	1	XT CAMO
28L	708300548	LH Rear Fender, Magnesium	1	Magnesium
28L	708300666	LH Rear Fender, Red	1	STD
28L	708300668	LH Rear Fender, Graphite	1	Black Carbon Fiber
28R	708300102	RH Rear Fender, Yellow	1	DPS
28R	708300102	RH Rear Fender, Yellow	1	XT Yellow
28R	708300227	RH Rear Fender, Red	1	XT Red
28R	708300438	RH Rear Fender, Camo	1	XT CAMO
28R	708300550	RH Rear Fender, Magnesium	1	Magnesium
28R	708300667	RH Rear Fender, Red	1	STD
28R	708300669	RH Rear Fender, Graphite	1	Black Carbon Fiber
30L	708300103	LH Rear Facia	1	STD Except Europe, X Except Europe
30L	708300103	LH Rear Facia	1	DPS
30L	708300103	LH Rear Facia	1	Black Carbon Fiber
30L	708300103	LH Rear Facia	1	XT Except Europe, LTD Except Europe
30L	708300103	LH Rear Facia	1	XT Europe, LTD Europe
30L	708300559	LH Rear Facia	1	STD Europe, X Europe
30R	708300104	RH Rear Facia	1	STD Except Europe, X Except Europe

30R	708300104	RH Rear Facia	1	DPS
30R	708300104	RH Rear Facia	1	XT Except Europe, LTD Except Europe
30R	708300104	RH Rear Facia	1	Black Carbon Fiber
30R	708300104	RH Rear Facia	1	XT Europe, LTD Europe
30R	708300560	RH Rear Facia	1	STD Europe, X Europe
33	708300183	Retaining Plate	4	
34	708300206	Retaining Plate Support	2	
35	293150100	Pop Rivet 3/16"	20	
36	293150104	Pop Rivet 3/16"	12	
41L	708300333	LH Painted Rail Cap	1	STD
41R	708300334	RH Painted Rail Cap	1	STD
43L	708300233	LH Rail Cover	1	XT
43R	708300234	RH Rail Cover	1	XT
46	708300345	Upper Pivot Support	2	
47	708300346	Front Support	1	
52L	715001259	LH Box Ass'y	1	
52R	715001257	RH Box Ass'y	1	
56	708300736	Spacer	4	
57	708300737	Bushing	4	
58	708300809	Heat Deflector Sheet	1	
59	708300810	Heat Deflector Sheet	1	
60	708300811	Heat Deflector Sheet	1	
61	708300812	Heat Deflector Sheet	1	
62	732610072	Push Nut	2	

COMMANDER 2013 STD, DPS, XT, 800R EFI / Rear Cargo Box Doors

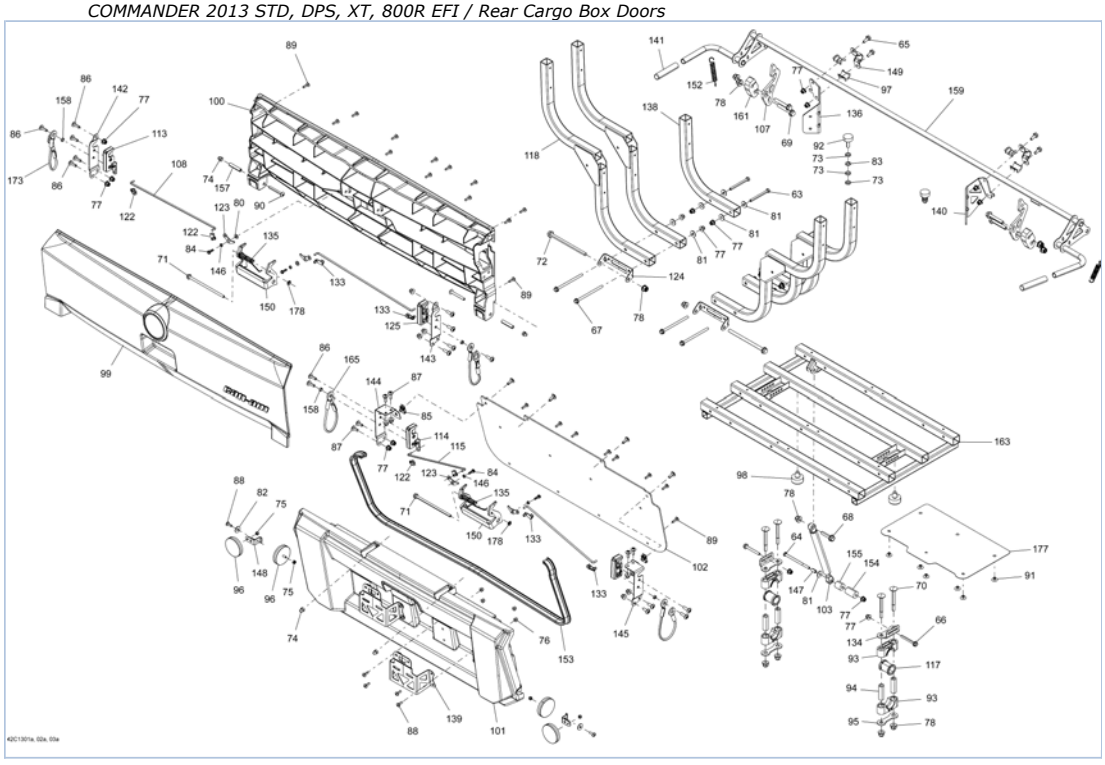

Part List

COMMANDER 2013 STD, DPS, XT, 800R EFI / Rear Cargo Box Doors

ITEM	PART NUMBER	PART NAME	QUANTITY	REMARKS
63	207066544	Hex. Screw M6 x 65	4	
64	207069044	Hex. Screw M6 X 90	1	
65	207661644	Hex. Flanged Screw M6 X 16	4	
66	207665044	Hex. Flanged Screw M6 X 50	2	
67	207669584	Hex. Flanged Screw M6 X 95	4	
68	207683544	Hex. Flanged Screw M8 X 35	1	
69	207685046	HEX. FLANGED SCREW M8 X 50	4	
70	207787044	Carriage Bolt M8 X 70	4	
71	230663084	HEX. FLANGED SCREW M6 X 130	2	
72	230683034	Hex. Flanged Screw M8 X 130	2	
73	232180600	HEX. JAM NUT M8	6	
74	232361493	Domed Nut M6	2	
75	232551414	Elastic Stop Nut M5	4	
76	233251414	Hex. Flanged Elastic Nut M5	8	Europe
77	233261414	Hex. Flanged Elastic Nut M6	13	
78	233281414	Hex. Flanged Elastic Nut M8	AR	
80	234061410	Flat Washer 6 mm	2	
81	234062410	Flat Washer 6 mm	12	
82	234062670	Flat Washer	AR	
83	234181401	Lock Washer 8 mm	2	
84	241151640	Hex. Flanged Screw K50 X 16	4	
85	250000048	Pannel Nut M6 X 1.0	2	
86	250000128	Torx Truss Screw M6 X 20	2	
87	250000129	Torx Screw M6 X 16	4	
88	250000145	Torx Screw M5 X 14	AR	Europe
89	250000146	Truss Head Torx Screw K50 X 16	AR	
90	250000239	Torx Truss Screw M6 X 50	2	
91	293150103	Pop Rivet 3/16"	6	
92	293720091	Frame Rubber Bumper	2	
93	506150400	Housing Half	4	
94	506150500	Housing Bushing	4	
95	506150600	Stopper Plate	2	
96	705002408	Reflector, Red	4	North America, International
97	705500033	Half Ring	4	
98	708000884	Rubber Stopper	2	
99	708300052	Outside Top Pannel, Yellow	1	XT Yellow
99	708300052	Outside Top Pannel, Yellow	1	DPS
99	708300441	Outside Top Pannel, Red	1	Red
99	708300442	Outside Top Pannel, Camo	1	CAMO
99	708300552	Outside Top Pannel, Magnesium	1	Magnesium
100	708300053	Inside Top Pannel	1	
101	715001255	Lower Panel Ass'y	1	
102	708300073	Inside Bottom Pannel	1	
103	708300512	GAZ SHOCK	1	
107	708300136	Box Retainer	2	
108	708300160	Top Rod	2	
113	708300162	LH Latch	2	
115	708300164	Lower Bottom Rod	2	
117	708300172	Pivot Bushing	2	
118	708300174	Welded Lateral Support, Black	4	

122	708300182	LH Tie Rod Clip	4	
123	708300184	Activator	4	
124	708300185	BRACKET PIVOT	2	
125	708300201	RH Latch	2	
133	708300202	RH Tie Rod Clip	2	
134	708300210	Adjustable Stopper Plate	2	
135	708300219	Spring	2	
136	708300278	LH Latch Lever Support	1	
138	708300340	Lateral Support, Black	2	
139	708300349	Plate Support	2	Europe
140	708300351	RH Latch Lever Support	1	
141	708300358	Cap Latch Lever	2	
142	708300359	LH Upper Support	1	
143	708300360	RH Upper Support	1	
144	708300361	LH Lower Support	1	
145	708300362	RH Lower Support	1	
146	708300365	Bushing	4	
147	708300366	Bushing	1	
148	708300367	Reflector Support	2	Europe
149	708300392	Clamp Reatiner	2	
150	708300398	Handle	2	
152	708300454	Spring	2	
153	293250240	Neoprene Seal	AR	
154	708300470	Spacer	1	
155	708300471	Spacer	1	
157	708300735	Bushing	2	
158	708300737	Bushing	4	
159	708300751	Cargo Handle Ass'y	1	
161	708300754	Spacer	2	
163	708300758	Welded Box Support	1	
165	708300762	Lower Retainer Cable	2	
173	708300763	Upper Retainer Cable	2	
177	708300780	Heat Deflector	1	
178	732610072	Push Nut	2	

COMMANDER 2013 STD, DPS, XT, 800R EFI / Seat

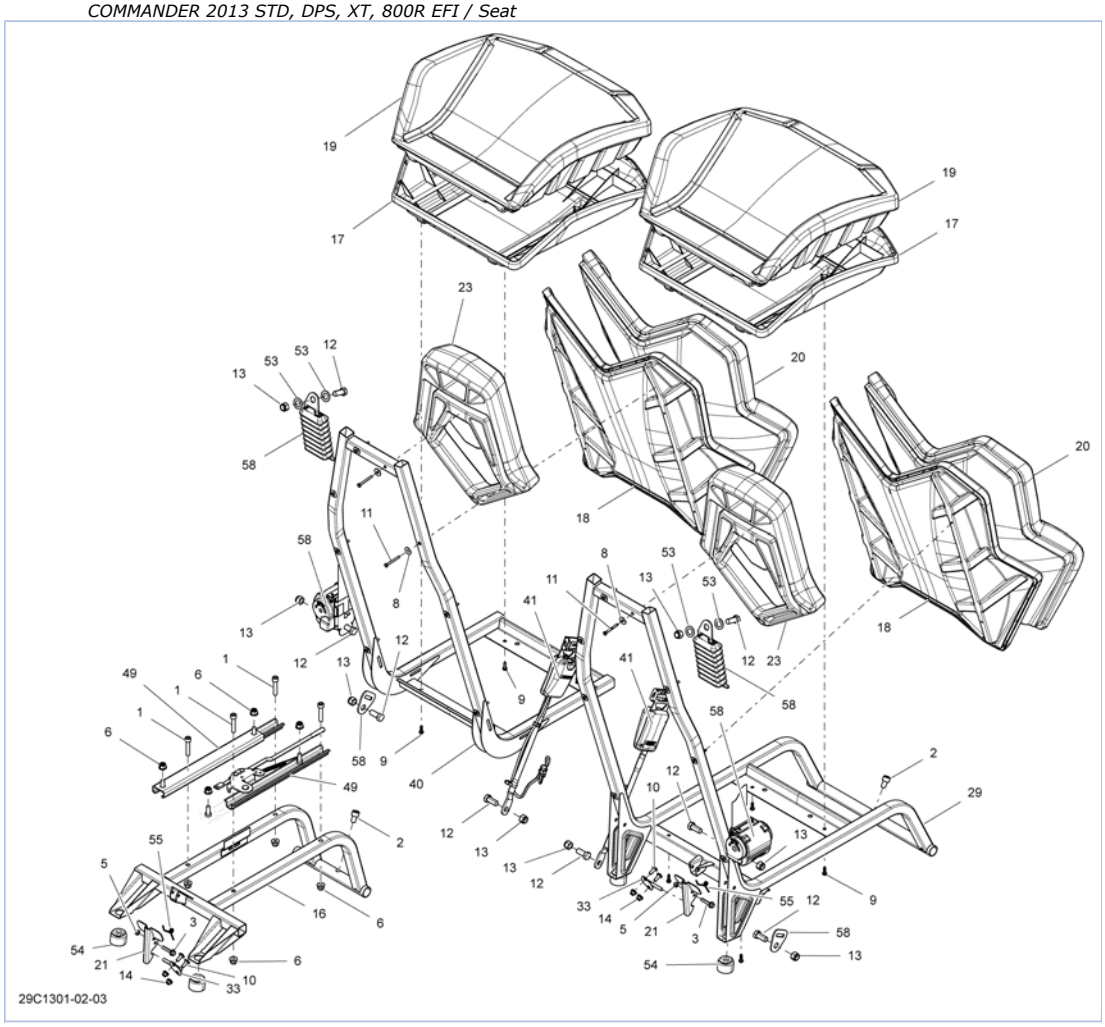

Part List

COMMANDER 2013 STD, DPS, XT, 800R EFI / Seat

ITEM	PART NUMBER	PART NAME	QUANTITY	REMARKS
1	205084044	Socket Head Screw M8 X 40	4	
2	205501644	Socket Screw M10 X 16	2	
3	207663044	Hex. Flanged Screw M6 X 30	2	
5	232561600	Hex. Elastic Stop Nut M6	2	
6	233281414	Hex. Flanged Elastic Nut M8	8	
8	234062670	Flat Washer	8	
9	241151640	Hex. Flanged Screw K50 X 16	4	
10	250000223	Torx Screw M6 X 16	4	
11	250000490	Hex. Washer Head Screw PT K50 X 40	8	
12	250000521	Hex. Cap Screw 7/16''X 1''	6	
13	250100135	Nylon Insert Hex. Lock Nut 7/16-20	6	
14	293450274	Insert	4	
16	708000667	Seat Member	1	
17	708001102	CUSHION ASS'Y	1	
18	708000669	BACKREST ASS'Y	1	
19	708001103	COVER SEAT	1	
20	708000675	Backrest Cover	1	
21	708000678	SEAT LATCH	2	
23	708000711	Head Rest	2	
29	708000690	Passenger Seat Frame	1	
33	708000794	Lock Stem	2	
40	708000739	Driver Seat Frame	1	
41	708000844	Passenger Buckle Side	1	
41	708000857	Passenger Buckle Side, Europe	1	Europe
49	708000848	LH Rail	1	
49	708000846	RH Rail	1	
53	708000891	Position Washer	4	
54	708000899	Rubber Bumper	4	
55	708000921	Spring	2	
58	708001108	Safety Belt	2	
58	708001130	Safety Belt	2	Europe

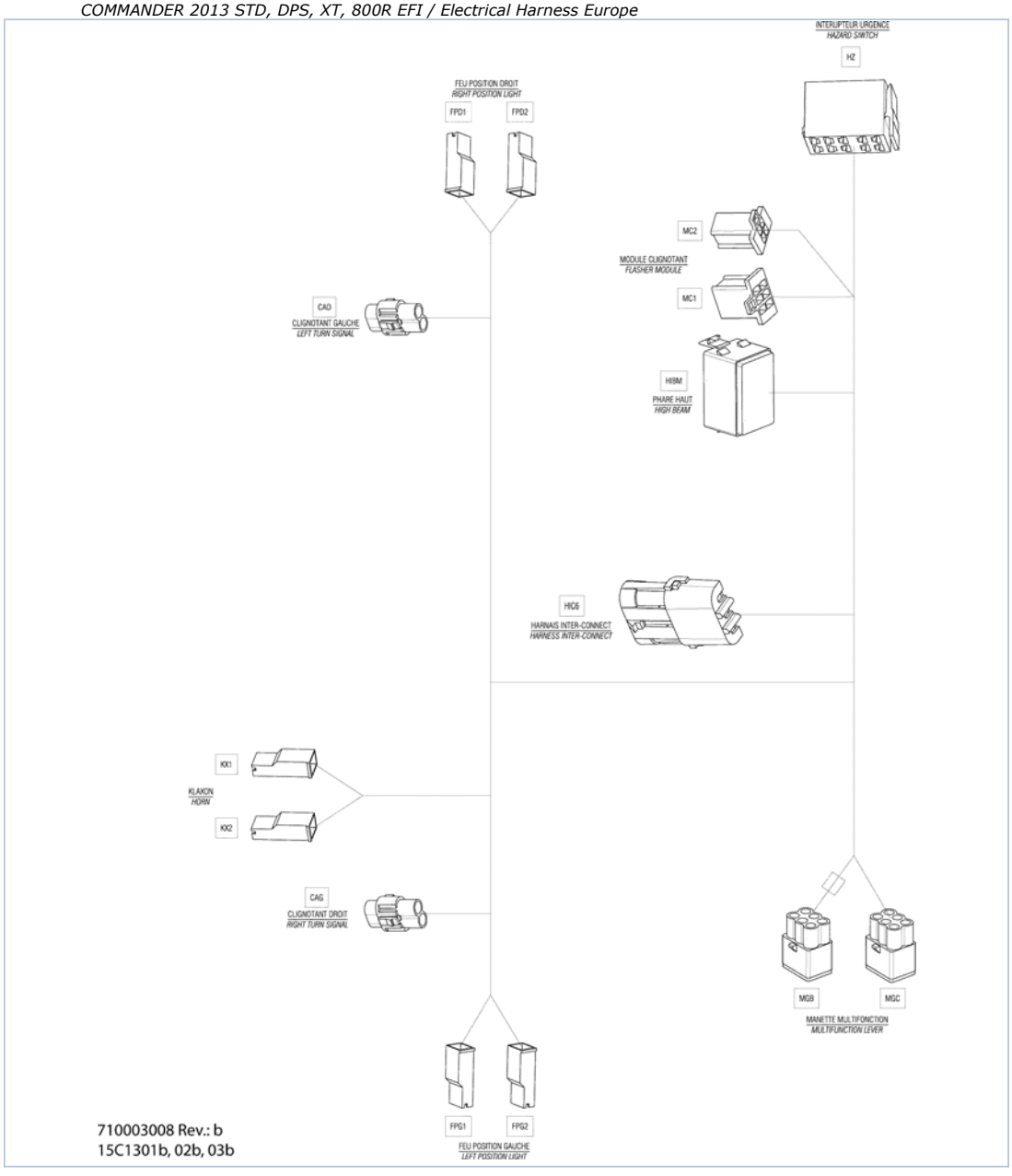
INTERRUPTEUR URGENCE
HAZARD SWITCH
HZ
FEU POSITION DROIT
RIGHT POSITION LIGHT
FPD1
FPD2
MC2
MODULE CLIGNOTANT
FLASHER MODULE
MC1
CAD
CLIGNOTANT GAUCHE
LEFT TURN SIGNAL
HBM
PHARE HAUT
HIGH BEAM
HIC6
HARNAIS INTER-CONNECT
HARNESS INTER-CONNECT
KX1
KLAXON
HORN
KX2
CAG
CLIGNOTANT DROIT
RIGHT TURN SIGNAL
MGB
MGC
MANETTE MULTIFONCTION
MULTIFUNCTION LEVER
FPG1
FPG2
FEU POSITION GAUCHE
LEFT POSITION LIGHT
710003008 Rev.: b
15C1301b, 02b, 03b

Part List

COMMANDER 2013 STD, DPS, XT, 800R EFI / Electrical Harness Europe

ITEM	PART NUMBER	PART NAME	QUANTITY	REMARKS
1	710003008	Harness Ass'y	1	EUR
CAD	409012100	Female Terminal	AR	
CAD	409012300	Seal	AR	
CAD	XXX	Female Housing, 2 Circuits	AR	
CAG	409012100	Female Terminal	AR	
CAG	409012300	Seal	AR	
CAG	409209200	Housing	AR	
D3	409012700	Diode	AR	
D4	409012700	Diode	AR	
FPD1	293550006	Female Terminal	AR	
FPD1	409010100	Female Terminal	AR	
FPD1	409010400	Female Terminal Housing, 1 Circuit	AR	
FPD1	710000751	Shrink Tubing	AR	
FPD2	293550006	Female Terminal	AR	
FPD2	409010100	Female Terminal	AR	
FPD2	409010400	Female Terminal Housing, 1 Circuit	AR	
FPD2	710000751	Shrink Tubing	AR	
FPG1	293550006	Female Terminal	AR	
FPG1	409010100	Female Terminal	AR	
FPG1	409010400	Female Terminal Housing, 1 Circuit	AR	
FPG1	710000751	Shrink Tubing	AR	
FPG2	293550006	Female Terminal	AR	
FPG2	409010100	Female Terminal	AR	
FPG2	409010400	Female Terminal Housing, 1 Circuit	AR	
FPG2	710000751	Shrink Tubing	AR	
HIBM	293550006	Female Terminal	AR	
HIBM	710002407	Housing	AR	
HIBM	710002863	Terminal	AR	
HIC6	278000222	Male Terminal	AR	
HIC6	278000281	Female Terminal Housing, 3 Circuits	AR	
HIC6	278000585	Wire Seal (20 Gauge) (Purple)(Packard)	AR	
HIC6	710000992	Clip	AR	
HZ	293550006	Female Terminal	AR	
HZ	710001931	Terminal	AR	
HZ	710002000	Housing	AR	
KX1	293550006	Female Terminal	AR	
KX1	409010100	Female Terminal	AR	
KX1	409010400	Female Terminal Housing, 1 Circuit	AR	
KX1	710000751	Shrink Tubing	AR	
KX2	293550006	Female Terminal	AR	
KX2	409010100	Female Terminal	AR	
KX2	409010400	Female Terminal Housing, 1 Circuit	AR	
KX2	710000751	Shrink Tubing	AR	
MC1	293550006	Female Terminal	AR	
MC1	710002314	Housing	AR	
MC1	710002315	Terminal	AR	
MC2	293550006	Female Terminal	AR	
MC2	710002313	Housing	AR	
MC2	710002315	Terminal	AR	
MGB	409012100	Female Terminal	AR	

MGB	409012300	Seal	AR	
MGB	710000080	Cap	AR	
MGB	710000081	Female Housing, 6 Circuits	AR	
MGC	409012100	Female Terminal	AR	
MGC	409012300	Seal	AR	
MGC	710000080	Cap	AR	
MGC	710000081	Female Housing, 6 Circuits	AR	

COMMANDER 2013 STD, DPS, XT, 800R EFI / Electrical Harness Rear, EUROPE

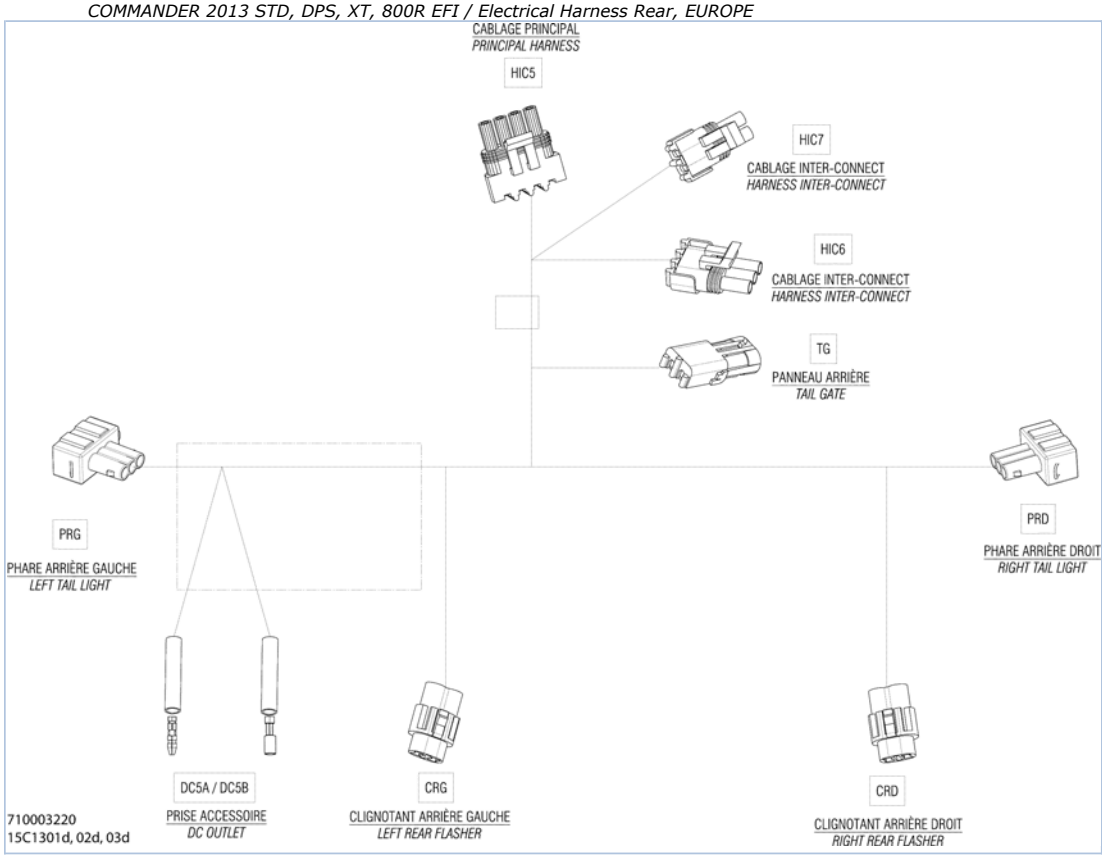

Part List

COMMANDER 2013 STD, DPS, XT, 800R EFI / Electrical Harness Rear, EUROPE

ITEM	PART NUMBER	PART NAME	QUANTITY	REMARKS
1	710003220	REAR HARNESS	1	EUR
PRD	278000998	Female Terminal	6	EUR
PRG	278000998	Female Terminal	6	EUR
TG	278000222	Male Terminal	2	EUR
HIC7	409007300	Female Terminal	2	EUR
HIC5	278000223	Female Terminal	7	EUR
HIC6	278000223	Female Terminal	7	EUR
TG	278000217	Female Housing, 2 Circuits	1	EUR
HIC7	278000220	Male Connector, 2 Circuits	1	EUR
HIC6	278000273	Male Housing, 3 Circuits	1	EUR
HIC5	278000395	Male Housing, 4 Circuits	1	EUR
HIC7	278000218	Wire Seal	2	EUR
CRD	409012100	Female Terminal	4	EUR
CRG	409012100	Female Terminal	4	EUR
CRD	XXX	Female Housing, 2 Circuits	2	EUR
CRD	409012300	Seal	4	EUR
CRG	409012300	Seal	4	EUR
DC5A	278001008	Insulated Sheath	1	EUR
DC5B	278001007	Insulated Sheath	1	EUR
PRD	415128501	Seal	6	EUR
PRG	415128501	Seal	6	EUR
HIC5	278001065	Wire Seal	9	EUR
DC5B	710000421	Female Terminal	1	EUR
DC5A	278002261	Female Terminal	1	EUR

COMMANDER 2013 STD, DPS, XT, 800R EFI / Electrical Harness Rear, NA_Inter

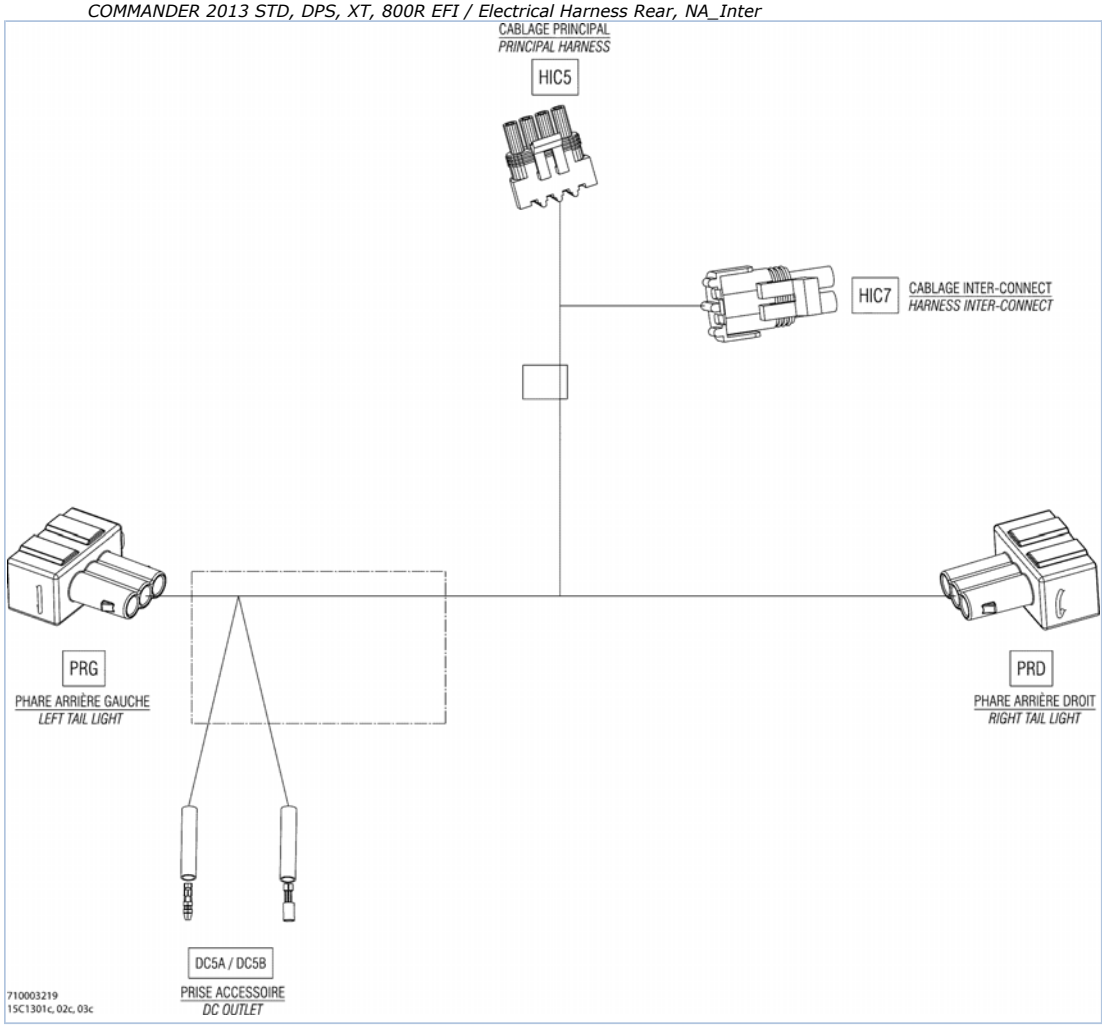

Part List

COMMANDER 2013 STD, DPS, XT, 800R EFI / Electrical Harness Rear, NA_Inter

ITEM	PART NUMBER	PART NAME	QUANTITY	REMARKS
1	710003219	REAR HARNESS	1	North America, Inter
504	278001065	Wire Seal	4	North America, Inter
DC5A	278001008	Insulated Sheath	1	North America, Inter
DC5A	278002261	Female Terminal	1	North America, Inter
DC5B	278001007	Insulated Sheath	1	North America, Inter
DC5B	710000421	Female Terminal	1	North America, Inter
DC5B	293550006	Female Terminal		North America, Inter
HIC5	278000223	Female Terminal	4	North America, Inter
HIC5	278000395	Male Housing, 4 Circuits	1	North America, Inter
HIC5	278000585	Wire Seal (20 Gauge) (Purple)(Packard)		North America, Inter
HIC7	409007300	Female Terminal	2	North America, Inter
HIC7	278000220	Male Connector, 2 Circuits	1	North America, Inter
HIC7	278000218	Wire Seal	2	North America, Inter
PRD	278000998	Female Terminal	6	North America, Inter
PRD	415128501	Seal	6	North America, Inter
PRD	XXX	Housing		North America, Inter
PRG	278000998	Female Terminal	6	North America, Inter
PRG	XXX	Housing		North America, Inter

COMMANDER 2013 STD, DPS, XT, 800R EFI / Electrical Harness STD, XT, DPS

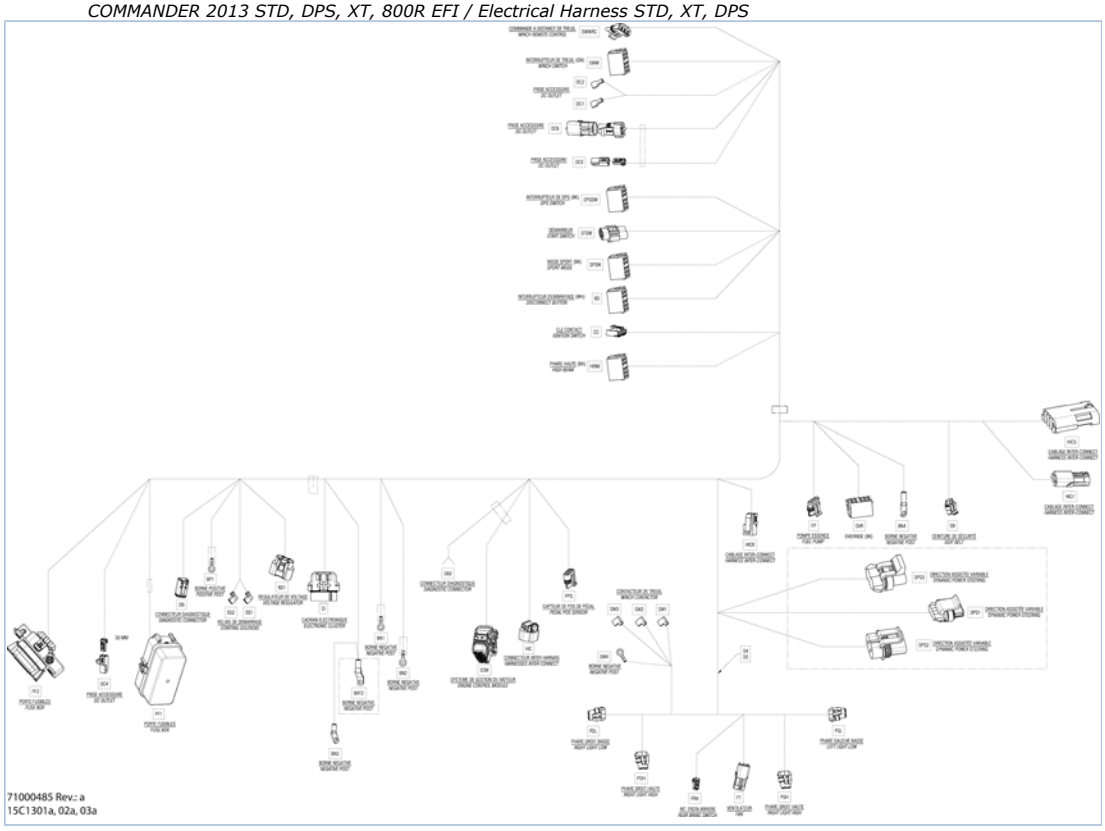

Part List

COMMANDER 2013 STD, DPS, XT, 800R EFI / Electrical Harness STD, XT, DPS

ITEM	PART NUMBER	PART NAME	QUANTITY	REMARKS
1	710002485	Harness Ass'y	1	Includes 1 to SWWRC
BD	293550006	Female Terminal	AR	
BD	710001931	Terminal	AR	
BD	710002001	Housing Connector	AR	
BN1	710000913	Terminal	AR	
BP1	710000913	Terminal	AR	
CA	710001634	Housing	AR	
CA	710001630	Terminal	AR	
CA	710001637	Seal	AR	
CA	710001633	Lock	AR	
CC	710000274	Female Terminal	AR	
CC	710000848	Lock	AR	
CC	710000849	Male Housing, 6 Circuits	AR	
CC	710001635	Terminal	AR	
CI	515175812	Plug	AR	
CI	515175801	Female Housing, 24 Circuits	AR	
CI	515175802	Retainer Block	AR	
CI	515175803	Wire Seal	AR	
CI	710000399	Female Housing	AR	
CI	710001131	Female Terminal	AR	
D2	409012700	Diode	AR	
D4	409012700	Diode	AR	
D5	409012700	Diode	AR	
DB	293000052	Sealing Cap	AR	
DB	515175673	Male Housing, 6 Circuits	AR	
DB	515175678	Male Wedge, 6 Circuits	AR	
DB	278001665	Female Terminal	AR	
DB2	293000052	Sealing Cap	AR	
DB2	515175673	Male Housing, 6 Circuits	AR	
DB2	515175678	Male Wedge, 6 Circuits	AR	
DB2	278001665	Female Terminal	AR	
DC1	293550006	Female Terminal	AR	
DC1	409010800	Female Terminal	AR	
DC2	293550006	Female Terminal	AR	
DC2	710000038	Female Terminal	AR	
DC3	293550006	Female Terminal	AR	
DC3	515175231	Female Terminal	AR	
DC3	515175658	Female Housing, 2 Circuits	AR	
DC3	710000667	Male Housing, 2 Circuits	AR	
DC4	515175231	Female Terminal	AR	
DC4	515175658	Female Housing, 2 Circuits	AR	
DC4	293550006	Female Terminal	AR	
DC4	710000667	Male Housing, 2 Circuits	AR	
DC5	293550006	Female Terminal	AR	
DC5	710001159	Wire Seal	AR	
DC5	710001160	Female Terminal	AR	
DC5	710001157	Housing	AR	
DC5	710001323	Lock	AR	
DC6	409007300	Female Terminal	AR	
DC6	278000217	Female Housing, 2 Circuits	AR	
DC6	278000220	Male Connector, 2 Circuits	AR	
DC6	278000218	Wire Seal	AR	
DC6	278000216	Wire Seal	AR	
DC6	710000992	Clip	AR	
ECM	710001588	Female Terminal Housing, 48	AR	

		Circuits		
ECM	710001589	Female Terminal	AR	
ECM	710001591	Cover	AR	
ECM	710001592	Plug	AR	
ECM	710001593	Plug	AR	
ECM	710001727	Female Terminal	AR	
FP	278001014	Female Terminal	AR	
FP	409209700	Female Housing, 4 Circuits	AR	
FP	278001013	Wire Seal	AR	
FP	710001340	Female Terminal	AR	
FP	515176621	Wire Seal	AR	
FRA	515175231	Female Terminal	AR	
FRA	515175658	Female Housing, 2 Circuits	AR	
FRA	293550006	Female Terminal	AR	
FT	278000217	Female Housing, 2 Circuits	AR	
FT	278000218	Wire Seal	AR	
FT	710000992	Clip	AR	
FT	409004300	Male Terminal	AR	
HIBM	293550006	Female Terminal	AR	
HIBM	710001931	Terminal	AR	
HIBM	710000221	Female Terminal	AR	
HIBM	710002000	Housing	AR	
HIBM2	409007300	Female Terminal	AR	
HIBM2	278000221	Male Connector, 6 Circuits	AR	
HIBM2	278000218	Wire Seal	AR	
HIBM2	278000216	Wire Seal	AR	
HIBM2	278000585	Wire Seal (20 Gauge) (Purple)(Packard)	AR	
HIBM2	270000137	Female Connector, 6 Circuits	AR	
HIBM2	278000223	Female Terminal	AR	
HIC	710001230	Seal	AR	
HIC	710001233	Seal	AR	
HIC	710001229	Terminal	AR	
HIC	710001228	Terminal	AR	
HIC	710001225	Cap	AR	
HIC	710001221	Lock	AR	
HIC	710001928	Housing	AR	
HIC5	278000222	Male Terminal	AR	
HIC5	278000585	Wire Seal (20 Gauge) (Purple)(Packard)	AR	
HIC5	710000992	Clip	AR	
HIC5	278000394	Female Housing, 4 Circuits	AR	
LB1	515175231	Female Terminal	AR	
LB1	515175658	Female Housing, 2 Circuits	AR	
LB1	293550006	Female Terminal	AR	
LB2	515175232	Male Terminal	AR	
LB2	515175654	Male Terminal Housing, 2 Circuits	AR	
OVR	293550006	Female Terminal	AR	
OVR	710001931	Terminal	AR	
OVR	710002000	Housing	AR	
PDH	710001142	Terminal Housing, 2 Circuits	AR	
PDH	710001143	Female Terminal	AR	
PDH	710001427	Wire Seal	AR	
PDL	710001142	Terminal Housing, 2 Circuits	AR	
PDL	710001143	Female Terminal	AR	
PDL	710001427	Wire Seal	AR	
PF1	710000742	Little Fuse, 5 Amperes	AR	
PF1	710000742	Little Fuse, 5 Amperes	AR	
PF1	710000742	Little Fuse, 5 Amperes	AR	

PF1	710000742	Little Fuse, 5 Amperes	AR	
PF1	710000742	Little Fuse, 5 Amperes	AR	
PF1	710000745	Little Fuse, 15 Amperes	AR	
PF1	710000747	Little Fuse, 30 Amperes	AR	
PF1	515176774	Relay, 30 AMP	AR	
PF1	710001778	Relay	AR	
PF1	710001778	Relay	AR	
PF1	710002177	Housing	AR	
PF1	278000999	Wire Seal	AR	
PF1	415128501	Seal	AR	
PF1	710000742	Little Fuse, 5 Amperes	AR	
PF1	710000743	Little Fuse, 7.5 Amperes	AR	
PF1	710000744	Little Fuse, 10 Amperes	AR	
PF1	710000745	Little Fuse, 15 Amperes	AR	
PF1	710000747	Little Fuse, 30 Amperes	AR	
PF1	710000660	Fuse Box Ass'y	AR	
PF1	710000781	Fuse Puller	AR	
PF1	710000836	Female Terminal	AR	
PF1	710000837	Female Terminal	AR	
PF1	710000840	Cap	AR	
PF1	710001026	Fuse Cover	AR	
PF1	278002172	Foam	AR	
PF1	515176774	Relay, 30 AMP	AR	
PF1	710001778	Relay	AR	
PF2	710001047	Fuse, 40 AMP	AR	
PF2	710001633	Lock	AR	
PF2	278001392	Open Barrel	AR	
PF2	710001200	FUSE 30 AMP.	AR	
PF2	710001632		AR	
PF2	710001636	Terminal	AR	
PF2	233261494	Hex. Elastic Flanged Nut M6	AR	
PF2	710001905	Terminal Joint	AR	
PF2	710001996	Housing	AR	
PGH	710001142	Terminal Housing, 2 Circuits	AR	
PGH	710001143	Female Terminal	AR	
PGH	710001427	Wire Seal	AR	
PGL	710001142	Terminal Housing, 2 Circuits	AR	
PGL	710001143	Female Terminal	AR	
PGL	710001427	Wire Seal	AR	
PPS	710001119	Female Terminal	AR	
PPS	278002299	Female Terminal Housing, 6 Circuits	AR	
RD1	710001934	Terminal	AR	
RD1	710000879	Housing, 3 Circuits	AR	
RD1	710000882	Cap	AR	
RD1	710001932	Seal	AR	
RD2	710000880	Housing, 3 Circuits	AR	
RD2	710001934	Terminal	AR	
RD2	710001932	Seal	AR	
SB	710001134	Female Terminal	AR	
SB	278001482	Seal	AR	
SB	710002177	Housing	AR	
SB	710002043	Lock	AR	
SPSW	293550006	Female Terminal	AR	
SPSW	710001931	Terminal	AR	
SPSW	710002000	Housing	AR	
SS1	409010300	Female Terminal	AR	
SS2	409010300	Female Terminal	AR	
STSW	409012100	Female Terminal	AR	

STSW	XXX	Female Housing, 2 Circuits	AR	
STSW	409012300	Seal	AR	
SW1	409010300	Female Terminal	AR	
SW1	293550006	Female Terminal	AR	
SW2	409010300	Female Terminal	AR	
SW2	293550006	Female Terminal	AR	
SW3	710000038	Female Terminal	AR	
SW3	293550006	Female Terminal	AR	
SW4	710000482	Shrink Tubing	AR	
SW4	278000992	Open Barrel	AR	
SWW	293550006	Female Terminal	AR	
SWW	710001931	Terminal	AR	
SWW	710002003	Housing Connector	AR	
SWWRC	278000223	Female Terminal	AR	
SWWRC	278000585	Wire Seal (20 Gauge) (Purple)(Packard)	AR	
SWWRC	278000273	Male Housing, 3 Circuits	AR	

COMMANDER 2013 STD, DPS, XT, 800R EFI / Electrical Harness Tail Gate, EUROPE

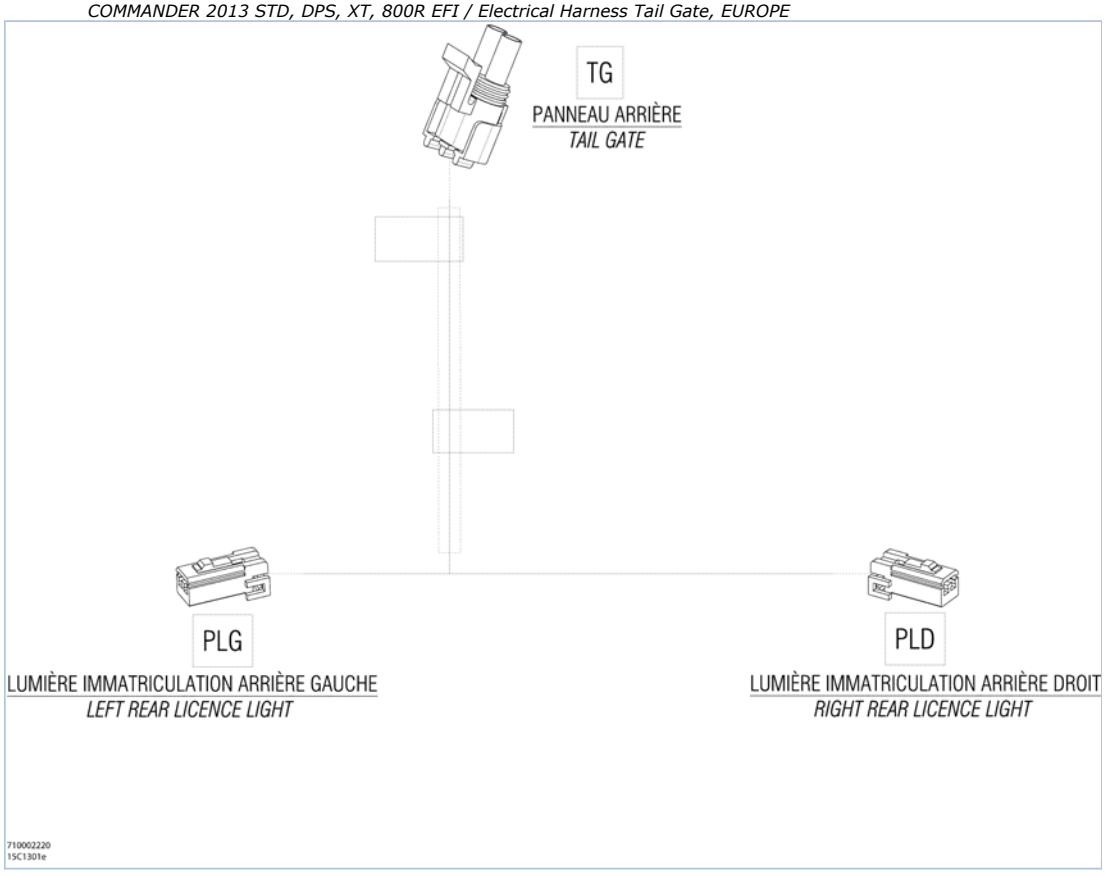

Part List

COMMANDER 2013 STD, DPS, XT, 800R EFI / Electrical Harness Tail Gate, EUROPE

ITEM	PART NUMBER	PART NAME	QUANTITY	REMARKS
1	710002220	Tail Gate Harness Ass'y	1	EUR
PLD	515175231	Female Terminal	4	EUR
PLD	515175658	Female Housing, 2 Circuits	2	EUR
PLG	515175231	Female Terminal	4	EUR
PLG	515175658	Female Housing, 2 Circuits	2	EUR
TG	278000223	Female Terminal	2	EUR
TG	278000220	Male Connector, 2 Circuits	1	EUR
TG	278001065	Wire Seal	2	EUR

COMMANDER 2013 STD, DPS, XT, 800R EFI / Electrical System All Models

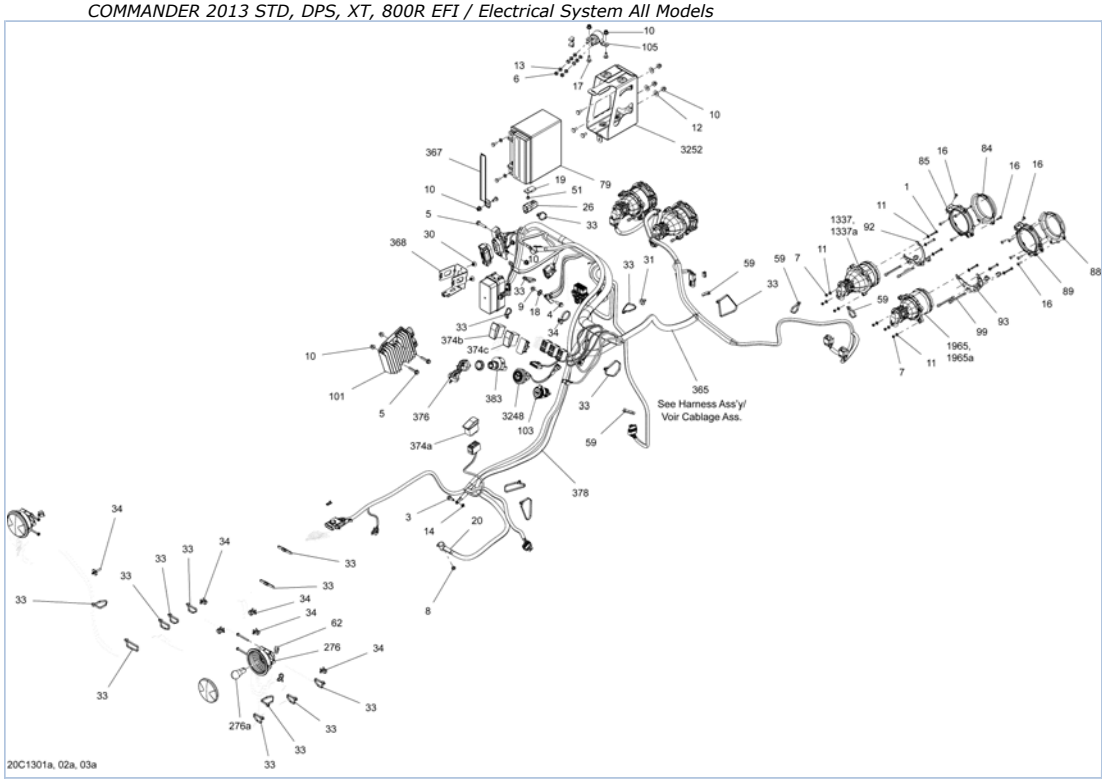

Part List

COMMANDER 2013 STD, DPS, XT, 800R EFI / Electrical System All Models

ITEM	PART NUMBER	PART NAME	QUANTITY	REMARKS
1	207142544	HEX. SCREW M4 X 25	12	
3	207561644	Hex. Flanged Screw M6 X 16, Scotch Grip	1	
4	207662044	Hex. Flanged Screw M6 X 20	1	
5	207663044	Hex. Flanged Screw M6 X 30	1	
5	207663044	Hex. Flanged Screw M6 X 30	2	
6	232061600	Hex. Nut M6	2	
7	232541414	Elastic Stop Nut M4	12	
8	232561414	Elastic Stop Nut M6	1	
9	233061414	Hex. Flanged Nut M6	1	
10	233261414	Hex. Flanged Elastic Nut M6	10	
11	234051410	Flat Washer M5	24	
12	234062410	Flat Washer 6 mm	3	
13	234161601	Lock Washer Helical M6	2	
14	234461608	External Serrated Lock Washer 6 mm	1	
15	241154540	Hex. Screw K50 X 45	4	
16	250000084	Phillips Screw K40 X 16	22	
17	250000223	Torx Screw M6 X 16	1	
18	250200041	Lock Washer Serrated M6	1	
19	270000141	Clip	1	
26	278002704	Diagnostic Connector	2	
30	293150103	Pop Rivet 3/16"	2	
31	293730040	Mount Dart	1	
33	293750008	Tie-Rap 350 mm	AR	
34	293750009	Tie-Rap 173 mm	AR	
51	390402400	Pop Rivet 3/16"	1	
59	414115200	Tie-Rap 180 mm	AR	
62	414227300	Clip	2	
79	410301203	Battery Ass'y, 18 Amperes	1	
84	710001083	LH Low Front Housing	1	
84	710001081	RH Low Front Housing	1	
85	710001084	LH Low Rear Housing	1	
85	710001082	RH Low Rear Housing	1	
88	710001087	LH High Front Housing	1	
88	710001085	RH High Front Housing	1	
89	710001088	LH High Rear Housing	1	
89	710001086	RH High Rear Housing	1	
92	710001037	LH Low Light Support	1	
92	710001094	RH Low Light Support	1	
93	710001036	LH High Light Support	1	
93	710001115	RH High Light Support	1	
99	710001147	Setting Screw	8	
101	710001191	Voltage Regulator	1	
103	710001248	Outlet DC	1	
105	710001364	Starter Relay	1	
276	710001645	TAIL LIGHT	2	
276a	520000758	Bulb	1	
365	710002485	Harness Ass'y	1	
367	710001916	Battery Holder	1	
368	710001918	Fuse Holder	1	
374a	710002053	Switch	1	
374b	710001737	Switch	1	
374c	710002199	PPS Sport Switch	1	
376	710000817	Key, Electronic	1	
376	710002183	Key, Electronic	1	

378	710002146	POSITIVE CABLE	1	
383	710002327	Ignition Switch	1	
1337	710002524	Low Beam Ass'y	2	
1337a	415129249	Halogen Bulb	1	
1965	710002525	High Beam Ass'y	2	
1965a	415129249	Halogen Bulb	1	
3248	710002594	Engine START Button	1	
3252	710003129	Battery Support	1	

COMMANDER 2013 STD, DPS, XT, 800R EFI / Electrical System NA, INTER, EUR

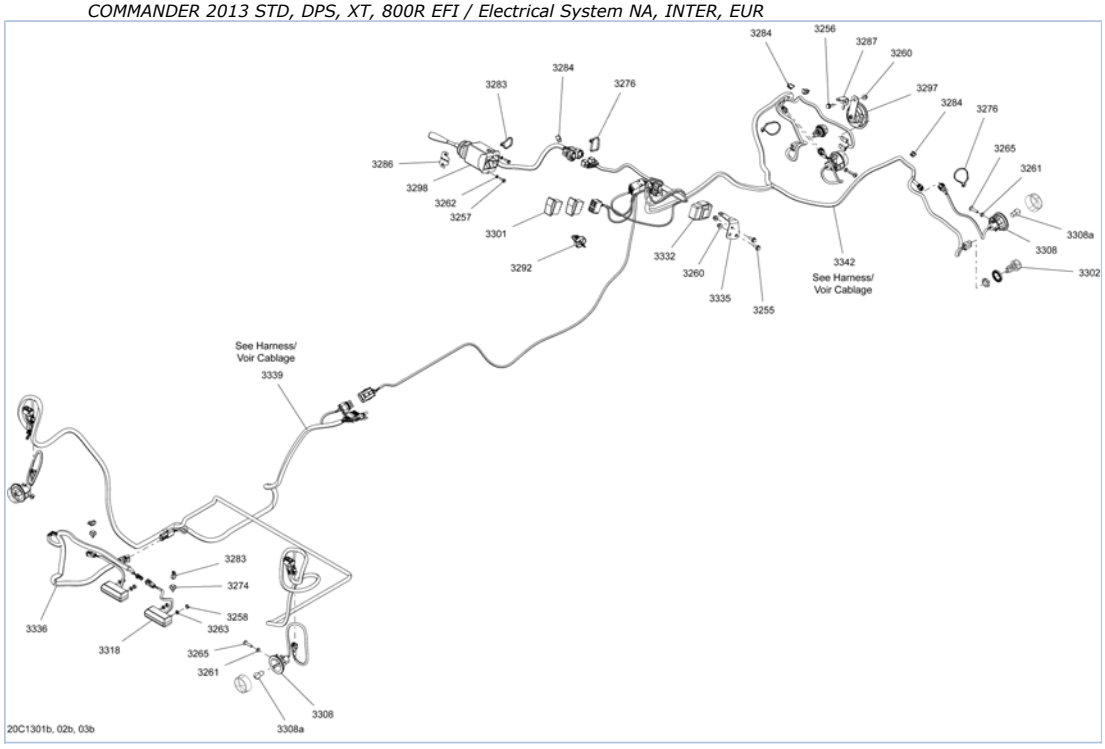

Part List

COMMANDER 2013 STD, DPS, XT, 800R EFI / Electrical System NA, INTER, EUR

ITEM	PART NUMBER	PART NAME	QUANTITY	REMARKS
3255	207661644	Hex. Flanged Screw M6 X 16	2	EUR
3256	207662044	Hex. Flanged Screw M6 X 20	1	EUR
3257	210251680	Hex. Forming Screw M5 X 16	2	EUR
3258	232061600	Hex. Nut M6	4	EUR
3260	233261414	Hex. Flanged Elastic Nut M6	3	EUR
3261	234061410	Flat Washer 6 mm	4	EUR
3262	234151401	LOCK WASHER 5 MM	2	EUR
3263	234161601	Lock Washer Helical M6	4	EUR
3265	250000284	Torx Screw M6 X 25	4	EUR
3274	293730040	Mount Dart	2	EUR
3276	293750008	Tie-Rap 350 mm	3	EUR
3283	414115200	Tie-Rap 180 mm	3	EUR
3284	414227300	Clip	4	EUR
3286	704902614	Fasher Decal	1	EUR
3287	709200284	Support	1	EUR
3292	710000817	Key, Electronic	1	EUR
3297	710000983	Horn	1	EUR
3298	710001721	Turn Signal	1	EUR
3301	710001725	Hi/Low Switch	1	North America, International
3301	710002076	Switch	1	EUR
3302	710001726	Day Light	2	EUR
3308	710002047	Flasher	4	EUR
3308a	XXX	Bulb	AR	EUR
3318	710002055	License Light	2	EUR
3332	710002393	FLASHER UNIT	1	EUR
3335	710002408	Support	1	EUR
3336	710002220	Rear Harness Ass'y	1	EUR
3339	710003219	REAR HARNESS	1	North America, International
3339	710003220	REAR HARNESS	1	EUR
3342	710003008	Harness Ass'y	1	EUR

COMMANDER 2013 STD, DPS, XT, 800R EFI / Electrical System STD, X, XT, LTD, DPS

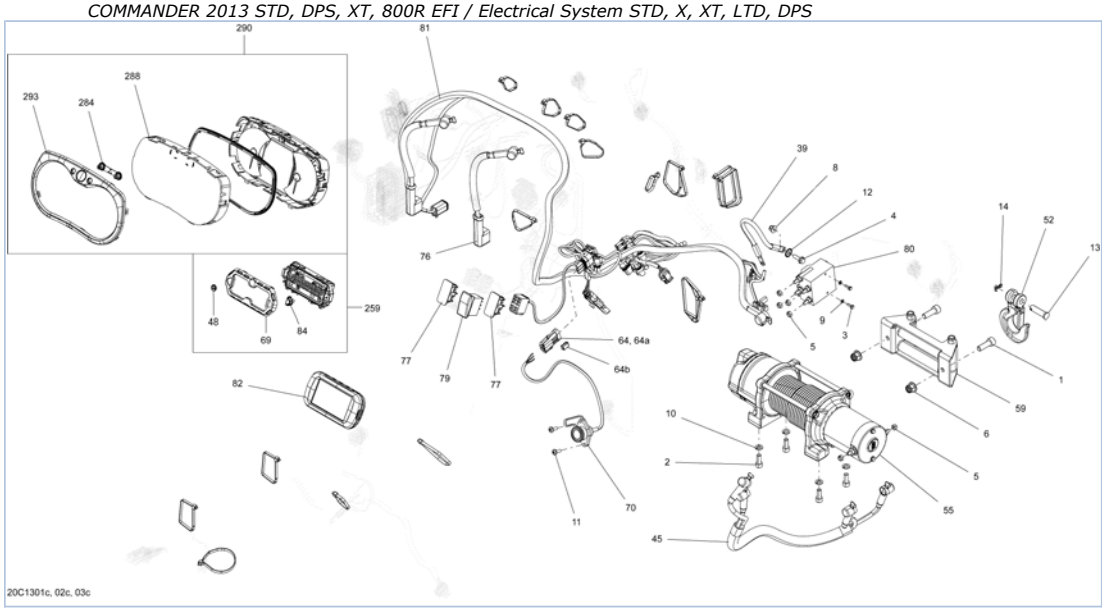

Part List

COMMANDER 2013 STD, DPS, XT, 800R EFI / Electrical System STD, X, XT, LTD, DPS

ITEM	PART NUMBER	PART NAME	QUANTITY	REMARKS
1	205003044	SOCKET SCREW M10 X 30	2	XT
2	205082044	Socket Head Screw M8 X 20	4	XT
3	207141044	Hex. Screw M4 X 10	2	XT
4	207662044	Hex. Flanged Screw M6 X 20	1	XT
5	232561434	Elastic Stop Nut M6	6	XT
6	233201414	Hex. Flanged Elastic Nut M10	2	XT
8	233261414	Hex. Flanged Elastic Nut M6	1	XT
9	234141601	Lock Washer 4 mm	2	XT
10	234181401	Lock Washer 8 mm	4	XT
11	250000146	Truss Head Torx Screw K50 X 16	2	XT
12	250200041	Lock Washer Serrated M6	1	XT
13	250400021	clevis pin	1	XT
14	250400022	Cotter Pin	1	XT
39	710002214	Negative Cable	1	XT
45	710002216	Electrical Winch Cable	1	XT
48	704901270	BRP Logo, 13 mm	1	STD
48	704901270	BRP Logo, 13 mm	1	DPS
52	705002329	HOOK	1	XT
55	705003944	Winch	1	XT
59	705004228	Winch Cable Guide	1	XT
64	710001059	CONNECTOR ASS'Y	1	XT
64a	278000281	Female Terminal Housing, 3 Circuits	1	XT
64b	710000992	Clip	1	XT
69	710001183	Trim Ring Ass'y	1	STD
69	710001183	Trim Ring Ass'y	1	DPS
70	710001023	Winch Connector	1	XT
76	710002148	POSITIVE CABLE	1	STD, X, DPS
77	710001999	Plug Carling	3	STD
77	710001999	Plug Carling	3	X
77	710001999	Plug Carling	3	DPS
79	710002052	Switch	1	XT
80	710002112	Solenoid	1	XT
81	710002159	POSITIVE CABLE	1	XT
82	N/A	GPS	-	
84	710001473	Button	1	STD
84	710001473	Button	1	DPS
259	710003288	Calibrated Speedometer	1	STD
259	710003288	Calibrated Speedometer	1	DPS
284	415129355	Speedometer Button	1	XT
284	415129355	Speedometer Button	1	X
288	415129349	Lens	1	XT
288	415129349	Lens	1	X
290	710003290	Calibrated Speedometer	1	XT
290	710003292	Calibrated Speedometer	1	X
293	415129348	Gauge Ring	1	XT
293	415129348	Gauge Ring	1	X

800

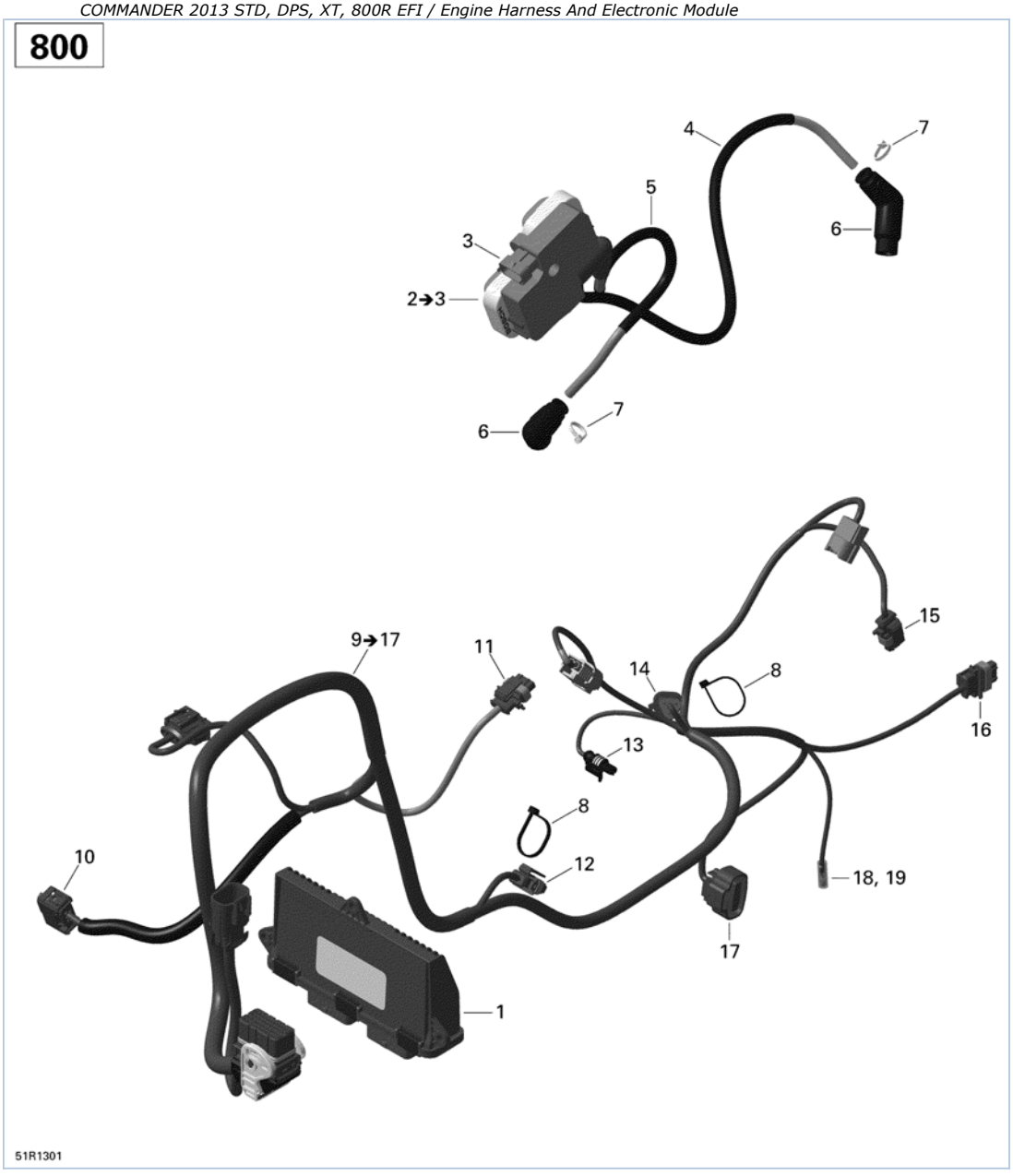

Part List

COMMANDER 2013 STD, DPS, XT, 800R EFI / Engine Harness And Electronic Module

ITEM	PART NUMBER	PART NAME	QUANTITY	REMARKS
1	420266992	ECM Connector	1	Except Europe
1	420266993	ECM Connector	1	Europe
2	278001546	Ignition Coil	1	Includes 2 to 3
3	710000568	Housing	1	
4	420665330	Spark Plug Cable, 610 mm, PTO Side	1	
5	420664300	Spark Plug Cable, 365 mm, MAG Side	1	
6	420265248	Spark Plug Connector	2	
7	420866710	Tie Rap	2	
8	420866714	Tie Rap	1	
9	420666332	Engine Wiring Harness	1	Includes 9 to 17
10	710001872	Housing, 6 Positions	1	
11	278000997	Male Housing, 3 Circuits	1	
12	278001005	Male Housing, 2 Circuits	1	
13	278001012	Male Housing, 1 Circuit	1	
14	409207000	Male Housing, 3 Circuits	1	
15	278001005	Male Housing, 2 Circuits	1	
16	278000997	Male Housing, 3 Circuits	1	
17	710000329	Male Housing, 4 Circuits	1	
18	278001009	Female Terminal	1	
19	278001007	Insulated Sheath	1	

The illustrations figuring in this parts catalog show typical construction of the different assemblies and, in all cases, may not reproduce the full detail or exact shape of the parts shown. However, they represent parts which have the same or similar function.

Les illustrations contenues dans ce catalogue indiquent la disposition des pièces les unes par rapport aux autres. Il est donc possible qu'elles ne rendent pas compte de la forme exacte de ces pièces ainsi que de leurs détails de fabrication. Ces illustrations ont pour but d'identifier des pièces qui remplissent la même fonction ou une fonction identique.

SYMBOLS USED IN THIS CATALOG

@	In «Quantity» column means «Use as Required».
Opt	In «Quantity» column means «Optional».
XXX	Parts marked with «XXX» are not available as spare parts.

SYMBOLES UTILISÉS DANS CE CATALOGUE

@	Dans la colonne «Quantité» signifie «Au besoin».
Opt	Dans la colonne «Quantité» signifie «En option».
XXX	Les articles marqués d'un «XXX» ne sont pas disponibles comme pièces de remplacement.

Part List

COMMANDER 2013 STD, DPS, XT, X 1000 EFI / Model Numbers

ITEM	PART NUMBER	PART NAME	QUANTITY	REMARKS
1	6ADA	Commander, 4X4 STD, Red		North America 1000 EFI
2	6ADB	Commander, 4X4 STD, Red		International 1000 EFI
3	6BDA	Commander, 4X4 XT, Yellow		North America 1000 EFI
4	6BDB	Commander, 4X4 XT, Magnesium		North America 1000 EFI
5	6BDD	Commander, 4X4 XT, Magnesium		Europe 1000 EFI
6	6BDE	Commander, 4X4 XT, Red		North America 1000 EFI
7	6BDF	Commander, 4X4 XT, Camo		North America 1000 EFI
8	6BDG	Commander, 4X4 XT, Camo		International 1000 EFI
9	6BDH	Commander, 4X4 XT, Magnesium		International 1000 EFI
10	6EDA	Commander, 4X4 X, Black/Yellow		North America 1000 EFI
11	6EDB	Commander, 4X4 X, Black/Yellow		International 1000 EFI
12	6EDC	Commander, 4X4 X, Black/Yellow		Europe 1000 EFI
13	6EDD	Commander, 4X4 X, Carbon/Black		North America 1000 EFI
14	6PDA	Commander, 4X4 DPS, Yellow		North America 1000 EFI

COMMANDER 2013 STD, DPS, XT, X 1000 EFI / Cooling System

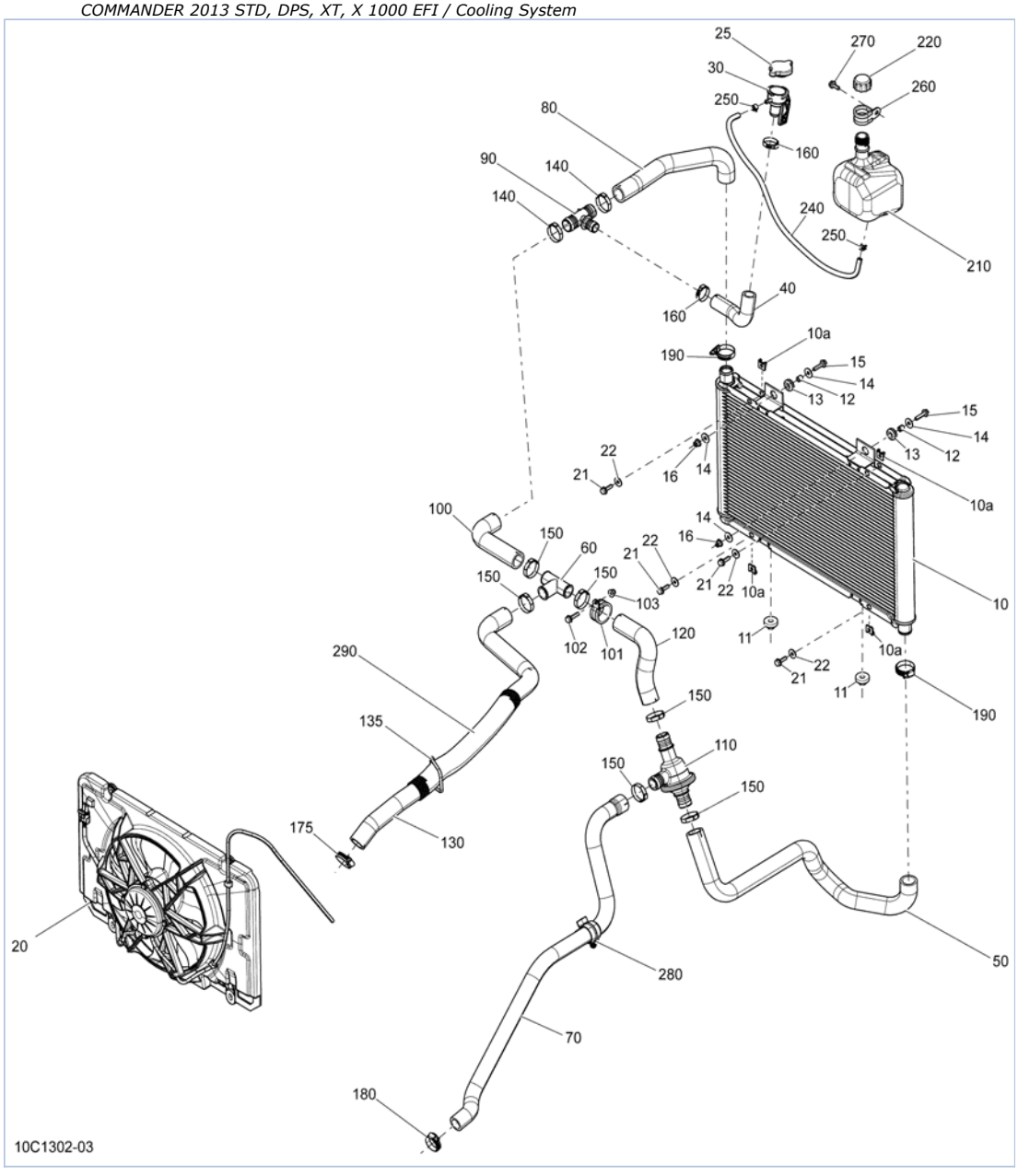

Part List

COMMANDER 2013 STD, DPS, XT, X 1000 EFI / Cooling System

ITEM	PART NUMBER	PART NAME	QUANTITY	REMARKS
10	709200395	Radiator	1	Includes 10 to 10a
10a	715900148	Clip Nut M6 X 1	4	
11	709200285	Grommet	2	
12	293900105	Bushing	2	
13	293720053	Grommet	2	
14	250200082	Flat Washer	4	
15	207662534	Hex. Flanged Screw	2	
16	233261434	Flanged Elastic Nut M6	2	
20	709200375	Fan Ass'y	1	
21	207662044	Hex. Flanged Screw M6 X 20	4	
22	234062410	Flat Washer 6 mm	4	
25	709200207	Pressure Cap	1	
30	709200179	FILLER NECK	1	
40	709200264	FILLER NECK HOSE	1	
50	709200378	Radiator Inlet Hose	1	
60	509000219	T-Fitting	1	
70	709200379	Pump Hose	1	
80	709200265	Radiator Outlet Hose	1	
90	509000372	T-Fitting	1	
100	709200380	Intermediate Hose	1	
101	293650218	Hose Retainer	1	
102	207662534	Hex. Flanged Screw	1	
103	233261434	Flanged Elastic Nut M6	1	
110	709200406	Thermostat	1	
120	709200381	Recirculation Hose	1	
130	709200382	Intermediate Hose	1	
135	293750008	Tie-Rap 350 mm	1	
140	509000162	Gear Clamp	2	
150	509000162	Gear Clamp	6	
160	293650099	Oetiker Gear Clamp	2	
175	293650098	Norma Gear Clamp	1	
180	293650098	Norma Gear Clamp	1	
190	293650098	Norma Gear Clamp	2	
210	709200312	Coolant Tank	1	
220	709200328	Tank Cap	1	
240	415110000	Polyurethane Hose 5.2 mm	1	
250	414554800	Spring Clamp	2	
260	709200036	HOSE ANCHOR	1	
270	207661644	Hex. Flanged Screw M6 X 16	1	
280	275500590	Retainer	1	
290	515176260	Tubing 35mm	1	

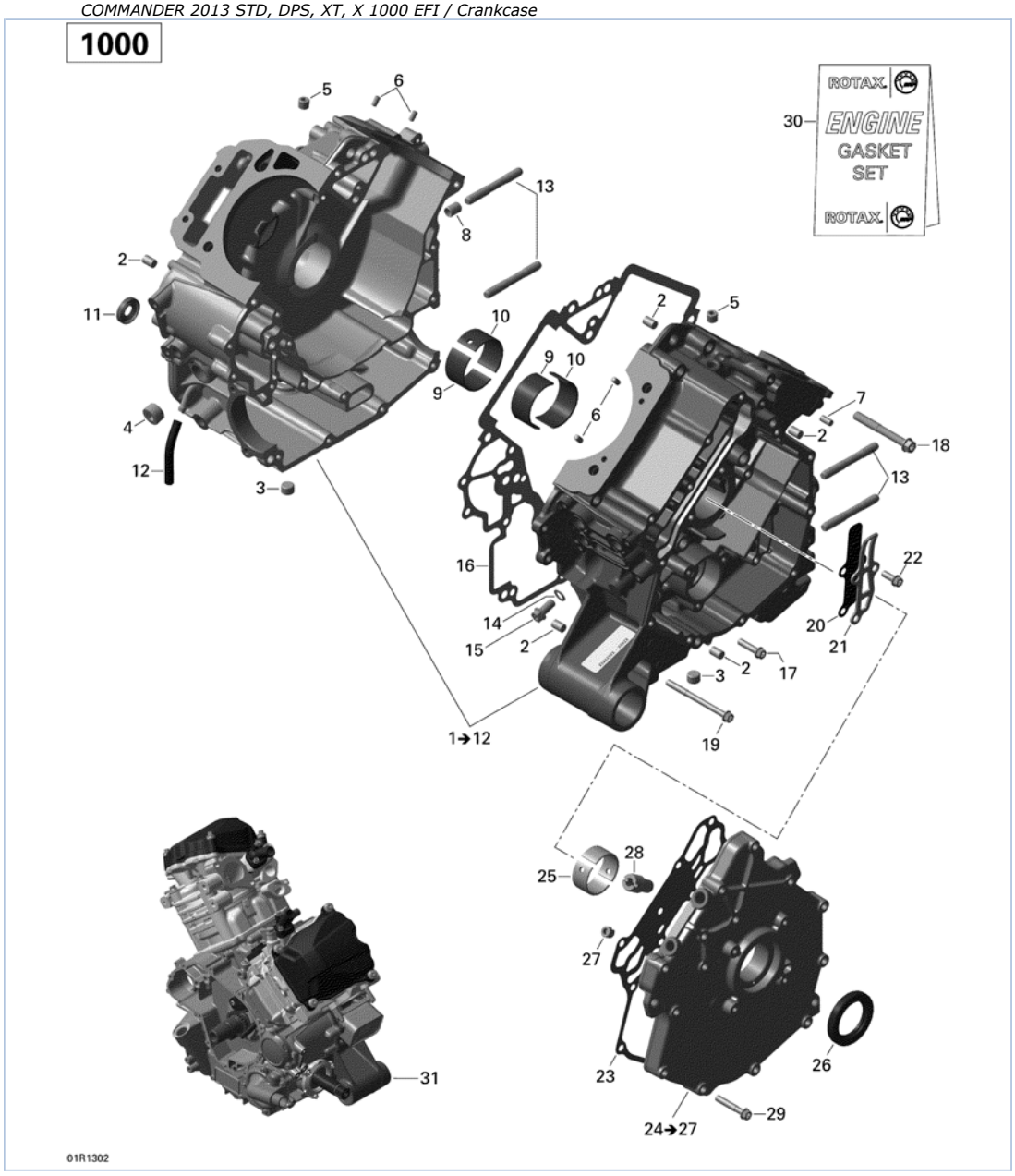
1000
ROTAX
ENGINE
GASKET
SET
ROTAX
30
5
6
13
8
2
11
10
9
4
12
3
2
5
9
10
6
7
2
18
13
16
22
14
15
2
20
21
3
2
17
19
1→12
28
25
27
31
23
26
24→27
29
01R1302

Part List

COMMANDER 2013 STD, DPS, XT, X 1000 EFI / Crankcase

ITEM	PART NUMBER	PART NAME	QUANTITY	REMARKS
1	420685253	Crankcase Ass'y	1	Includes 1 to 12
2	420632010	Center Pin 8 X 12	5	
3	420840657	Plug Screw M12 X 1.5	2	
4	420240170	Plug Screw M18 X 1.5	1	
5	420641323	Plug Screw M10 X 1	2	
6	420929650	Drive Pin 5 X 10	4	
7	420932780	Needle Pin	1	
8	420929670	Dowel Pin 10 X 13	1	
9	420233960	Plain Bearing	2	
10	420233965	Plain Bearing	2	
11	420650310	Oil Seal	1	
12	415110000	Polyurethane Hose 5.2 mm	1	
13	420240814	Stud	4	
14	420950141	Sealing Ring	1	
15	420440852	Flanged Torx Screw M8 X 16	1	
16	420651225	Gasket	1	
17	420641238	Flanged Torx Screw M6 X 25	2	
18	420440402	Flanged Torx Screw M8 X 65	4	
19	420440657	Flanged Torx Screw M6 X 75	13	
20	420224720	Valve Plate	1	
21	420224725	Reed Valve Stop	1	
22	420641048	Flanged Torx Screw M6 X 16	3	
23	420651211	Gasket	1	
24	420612128	PTO Cover Ass'y	1	Includes 24 to 27
25	420233997	Bearing Sleeve	2	
26	420631932	Oil Seal	1	
27	420641323	Plug Screw M10 X 1	1	
28	420256334	Hose Nipple M12 X 1.5	1	
29	420641258	Flanged Torx Screw M6 X 35	14	
30	420684150	Gasket Kit, Engine	1	
31	420101002	Long Block, 1000	1	

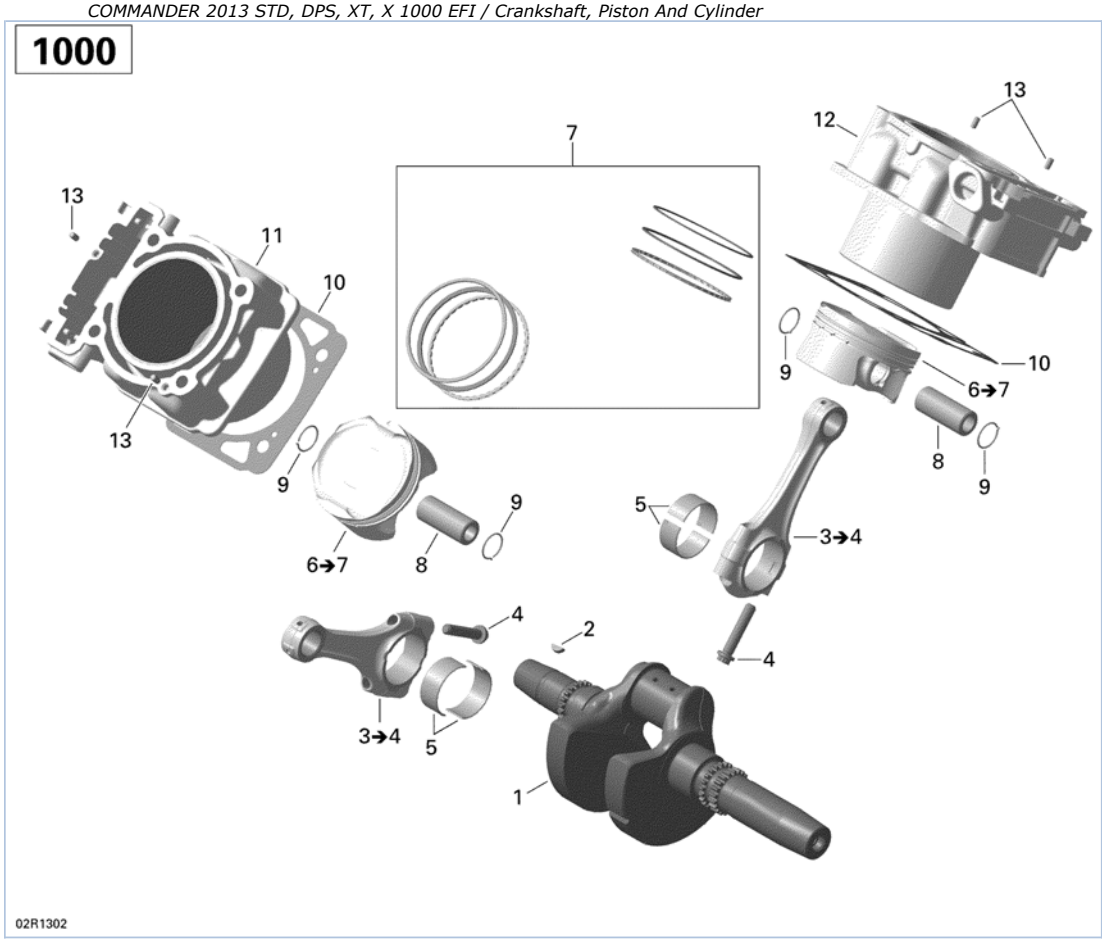
1000
13
12
7
13
11
10
10
9
6→7
13
8
9
9
9
5
3→4
6→7
8
4
2
4
3→4
5
1
02R1302

Part List

COMMANDER 2013 STD, DPS, XT, X 1000 EFI / Crankshaft, Piston And Cylinder

ITEM	PART NUMBER	PART NAME	QUANTITY	REMARKS
1	420219735	Crankshaft	1	
2	420246570	Woodruff Key 4 X 5	1	
3	420217556	Connecting Rod Ass'y	2	Includes 3 to 4
4	420641477	Connecting Rod Screw M9 X 1/45	4	
5	420233726	Plain Bearing	4	
6	420685242	Piston Ass'y, 90.955 mm	2	Includes 6 to 7
7	420685244	Piston Ring Set	2	
8	420216351	Piston Pin	2	
9	420245436	Piston Circlip	4	
10	420630210	Gasket	2	
11	420623566	Cylinder With Sleeve, Front	1	
12	420623568	Cylinder With Sleeve, Rear	1	
13	420929650	Drive Pin 5 X 10	4	

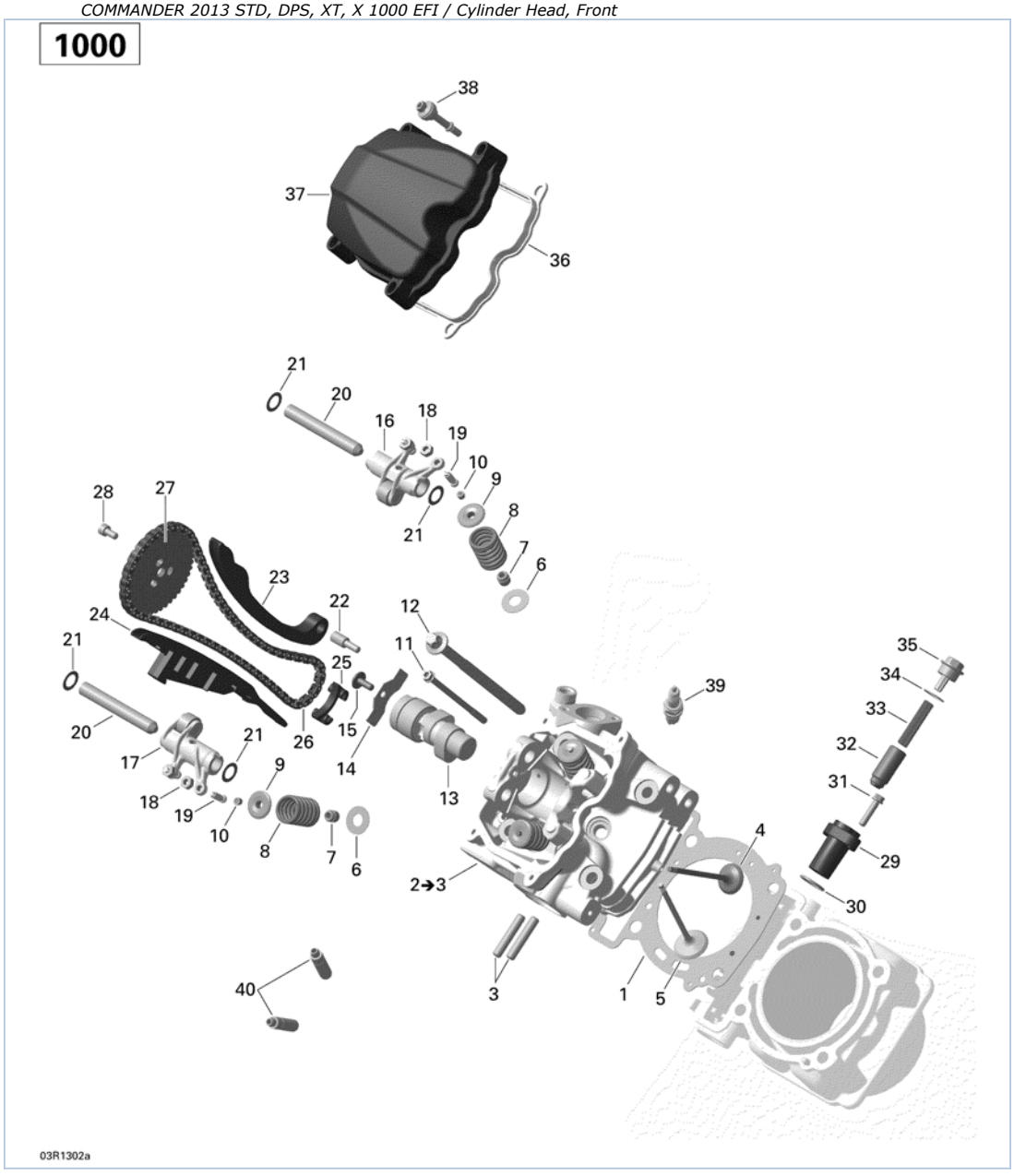
1000
38
37
36
21
20
16
18
19
10
9
8
7
6
28
27
23
22
24
12
11
25
15
14
13
26
17
18
19
10
9
8
7
6
2→3
3
1
5
4
39
35
34
33
32
31
29
30
40
03R1302a

Part List

COMMANDER 2013 STD, DPS, XT, X 1000 EFI / Cylinder Head, Front

ITEM	PART NUMBER	PART NAME	QUANTITY	REMARKS
1	420630195	Cylinder Head Gasket	1	
2	420623064	Cylinder Front Ass'y	1	Includes 2 to 3
3	420941014	Stud M8 x 26	2	
4	420254361	Exhaust Valve, 27 mm	2	
5	420254351	Intake Valve, 31 mm	2	
6	420627770	Thrust Washer	4	
7	420230515	Valve Stem Seal	4	
8	420239295	Valve Spring	4	
9	420254132	Valve Spring Retainer	4	
10	420254120	Cotter Valve	8	
11	420440612	Flanged Torx Screw M6 X 105	2	
12	420441284	Torx Screw M10 X 159	4	
13	420620865	Camshaft	1	
14	420627743	Holding Strip	1	
15	420241525	Torx Screw M6 X 16	1	
16	420254905	Rocker Arm Inlet	1	
17	420254915	Rocker Arm Exhaust	1	
18	420242910	Hex. Nut M6	4	
19	420241335	Adjustment Screw M6 X 0.75	4	
20	420229712	Pin #12, Small, M6 X 90	2	
21	420944382	Shim	4	
22	420240941	Bearing Screw M6	1	
23	420436017	Chain Tension Guide	1	
24	420236583	Chain Guide	1	
25	420236350	Chain Guide	1	
26	420297067	Silent Chain	1	
27	420254435	Camshaft Sprocket, 42 Teeth	1	
28	420840031	Screw M6 X 12	3	
29	420236510	Chain Tensioner Housing	1	
30	420430370	O-Ring	1	
31	420641238	Flanged Torx Screw M6 X 25	2	
32	420236520	Chain Tensioner Plunger	1	
33	420238120	Spring	1	
34	420250890	O-Ring	1	
35	420641150	Plug Screw	1	
36	420630260	Gasket	1	
37	420610395	Valve Cover	1	
38	420440560	Torx Screw M6 X 30.5	4	
39	707000246	Spark Plug, NGK DCP-R8E	1	
40	420254374	Valve Guide	4	

1000

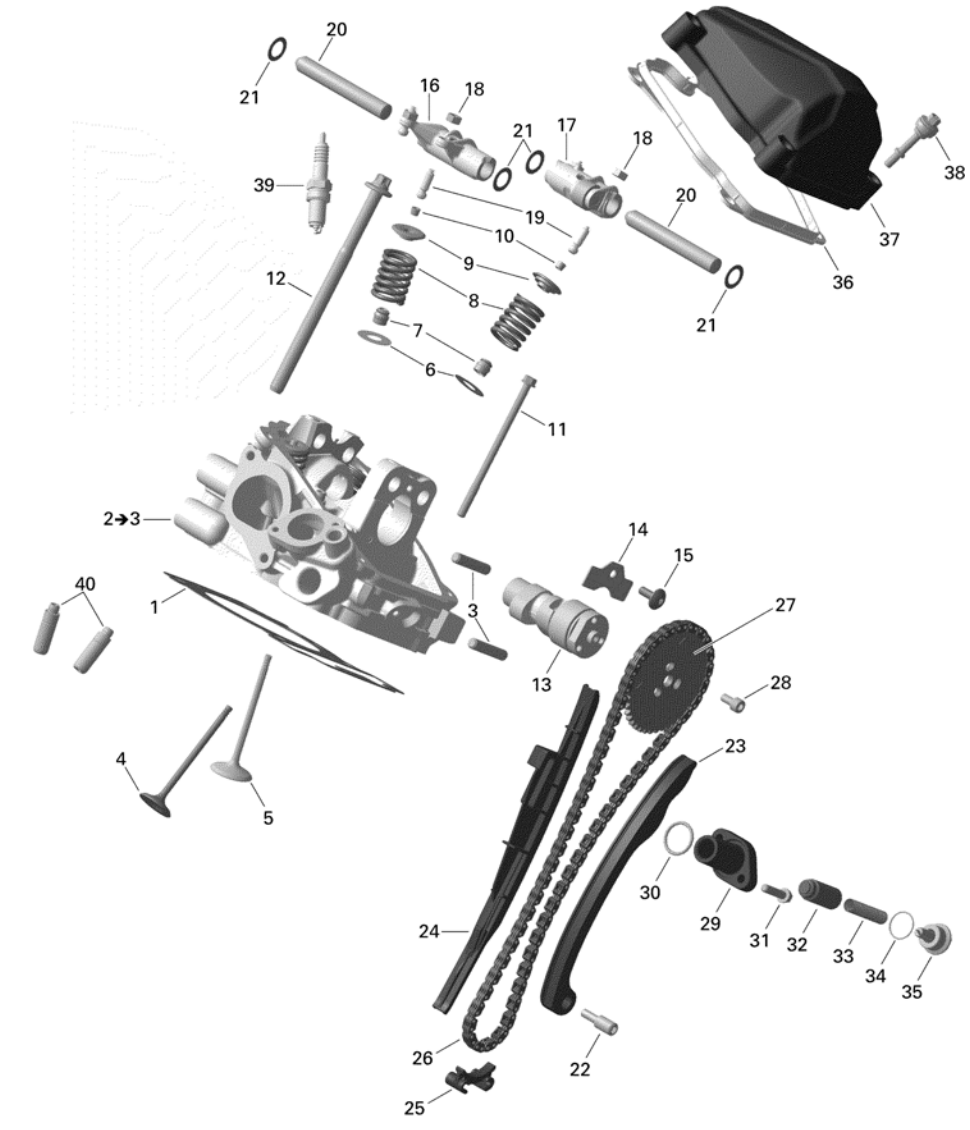
20
21
16
18
21
17
18
38
39
19
20
37
10
9
36
12
8
21
7
6
11
2➔3
14
15
40
1
3
27
13
28
4
23
5
30
29
31
32
33
34
35
24
26
22
25
03R1302b

Part List

COMMANDER 2013 STD, DPS, XT, X 1000 EFI / Cylinder Head, Rear

ITEM	PART NUMBER	PART NAME	QUANTITY	REMARKS
1	420630195	Cylinder Head Gasket	1	
2	420623064	Cylinder Front Ass'y	1	Includes 2 to 3
3	420941014	Stud M8 x 26	2	
4	420254361	Exhaust Valve, 27 mm	2	
5	420254351	Intake Valve, 31 mm	2	
6	420627770	Thrust Washer	4	
7	420230515	Valve Stem Seal	4	
8	420239295	Valve Spring	4	
9	420254132	Valve Spring Retainer	4	
10	420254120	Cotter Valve	8	
11	420440612	Flanged Torx Screw M6 X 105	2	
12	420441284	Torx Screw M10 X 159	4	
13	420620862	Camshaft	1	
14	420627743	Holding Strip	1	
15	420241525	Torx Screw M6 X 16	1	
16	420254905	Rocker Arm Inlet	1	
17	420254915	Rocker Arm Exhaust	1	
18	420242910	Hex. Nut M6	4	
19	420241335	Adjustment Screw M6 X 0.75	4	
20	420229712	Pin #12, Small, M6 X 90	2	
21	420944382	Shim	4	
22	420240941	Bearing Screw M6	1	
23	420436017	Chain Tension Guide	1	
24	420236583	Chain Guide	1	
25	420236350	Chain Guide	1	
26	420297067	Silent Chain	1	
27	420254435	Camshaft Sprocket, 42 Teeth	1	
28	420840031	Screw M6 X 12	3	
29	420236510	Chain Tensioner Housing	1	
30	420430370	O-Ring	1	
31	420641238	Flanged Torx Screw M6 X 25	2	
32	420236520	Chain Tensioner Plunger	1	
33	420238120	Spring	1	
34	420250890	O-Ring	1	
35	420641150	Plug Screw	1	
36	420630260	Gasket	1	
37	420610395	Valve Cover	1	
38	420440560	Torx Screw M6 X 30.5	4	
39	707000246	Spark Plug, NGK DCP-R8E	1	
40	420254374	Valve Guide	4	

COMMANDER 2013 STD, DPS, XT, X 1000 EFI / Engine

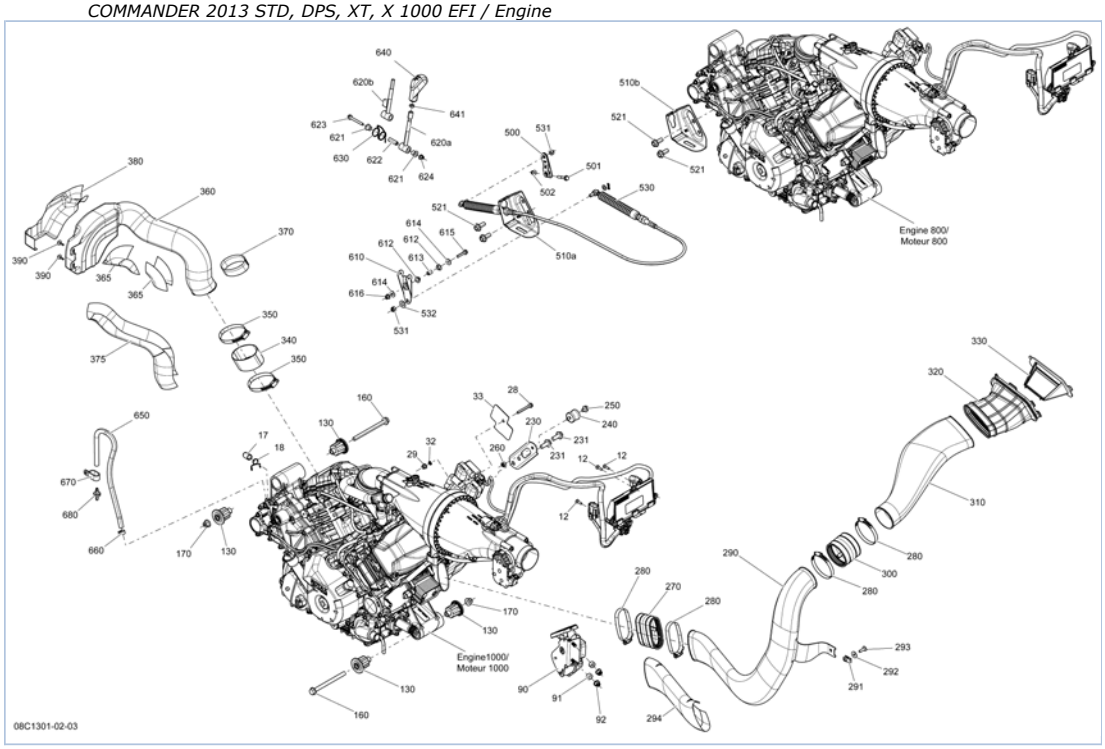

Part List

COMMANDER 2013 STD, DPS, XT, X 1000 EFI / Engine

ITEM	PART NUMBER	PART NAME	QUANTITY	REMARKS
12	250000146	Truss Head Torx Screw K50 X 16	3	
17	707001185	Plug	1	
18	707800506	RETAINER CLIP	1	
28	207665044	Hex. Flanged Screw M6 X 50	1	
29	233261414	Hex. Flanged Elastic Nut M6	1	
32	234461608	External Serrated Lock Washer 6 mm	1	
33	710000073	INSULATOR PAD	1	
90	707001166	Accelerator Pedal	1	
91	707000848	Bushing	2	
92	233281414	Hex. Flanged Elastic Nut M8	2	
130	707000426	ANTI-VIBRATION MOUNT	4	
160	230602546	Hex. Flanged Screw M10 X 125	2	
170	233201436	Flanged Elastic Nut	2	
230	707000707	Upper Engine Bracket	1	
231	207602544	HEX. FLANGED SCREW M10 X 25	2	
240	707000949	RUBBER ISOLATOR	1	
250	207581046	Flanged Screw M8 x 10, Scotch Grip	1	
260	232581414	Hex. Elastic Stop Nut M8	1	
270	707001043	Flexible Adaptor	1	
280	293650091	Norma Clamp	4	
290	707000639	Air Inlet	1	
291	250000048	Pannel Nut M6 X 1.0	1	
292	250200082	Flat Washer	1	
293	250000128	Torx Truss Screw M6 X 20	1	
294	707000924	Reflective Sheet	1	
300	707001043	Flexible Adaptor	1	
310	707000909	Primary Air Intake	1	
320	707000908	Adaptor	1	
330	707000873	CVT Filter	1	
340	707000789	Adaptor	1	
350	293650118	Norma Gear Clamp	2	
360	707000640	CVT Air Outlet	1	
365	707000991	Reflective Sheet	2	
370	707000988	Reflective Sheet	1	
375	707000989	Reflective Sheet	1	
380	707000990	Reflective Sheet	1	
390	250000113	Screw M4 X 16, Type K-40	2	
500	707000911	Lever	1	
501	207663544	Hex. Flanged Screw M6 X 35	1	
502	233261414	Hex. Flanged Elastic Nut M6	1	
510a	707000919	CABLE SUPPORT	1	
510b	N/A	Not available for this vehicle	1	
521	207602544	HEX. FLANGED SCREW M10 X 25	2	
530	707000775	Shifting Cable	1	
531	232581414	Hex. Elastic Stop Nut M8	2	
532	234001410	Flat Washer 10 mm	1	
610	707000828	Lower Lever Arm	1	
612	707000847	Flanged Bushing	2	
613	707000801	Bushing	1	
614	234062410	Flat Washer 6 mm	2	
615	207663044	Hex. Flanged Screw M6 X 30	1	

616	233261414	Hex. Flanged Elastic Nut M6	1	
620a	707000711	Upper Lever Arm	1	Except Europe
620b	707000978	Upper Lever Arm	1	Europe
621	707000869	Flanged Bushing	2	
622	707000868	Bushing	1	
623	207665044	Hex. Flanged Screw M6 X 50	1	
624	233261414	Hex. Flanged Elastic Nut M6	1	
630	707000750	Lever Arm Spring	1	
640	707000284	LEVER HANDLE	1	
641	232180491	HEX. JAM NUT M8	1	
650	415079800	Hose 1/4"	1	
660	414415200	Universal Spring Clamp	1	
670	709000057	Open Clamp	1	
680	275500398	Check Valve	1	

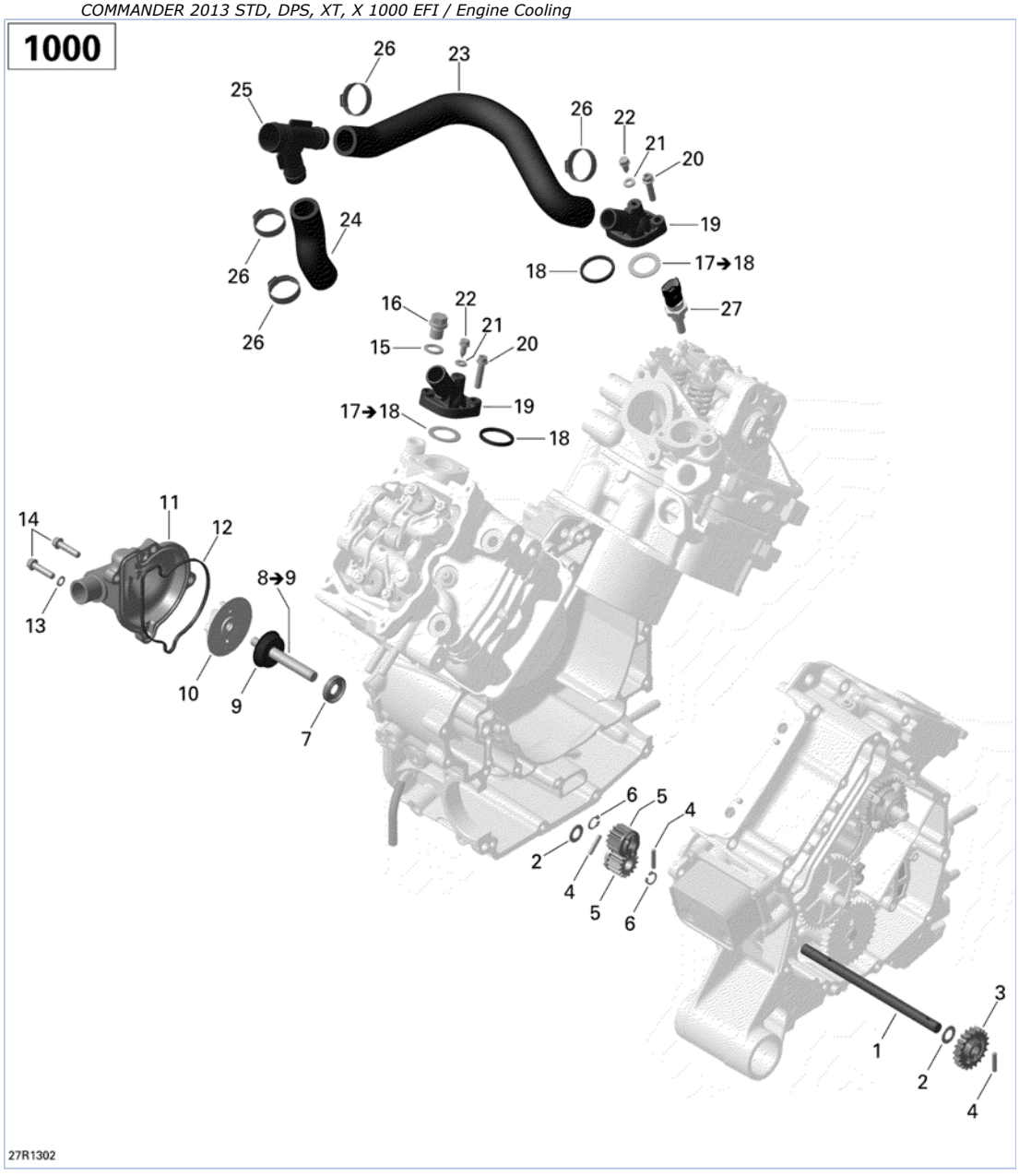
1000
26
23
25
26
22
21
20
19
24
26
18
17➔18
27
26
16
22
21
15
20
19
17➔18
18
14
11
12
13
8➔9
10
9
7
6
5
4
2
4
5
6
3
1
2
4
27R1302

Part List

COMMANDER 2013 STD, DPS, XT, X 1000 EFI / Engine Cooling

ITEM	PART NUMBER	PART NAME	QUANTITY	REMARKS
1	420620500	Intermediate Shaft	1	
2	420827590	Thrust Washer	2	
3	420434330	Water Pump Gear	1	
4	420232420	Needle Pin	3	
5	420234627	Pump Gear, 15 Teeth	2	
6	420245330	Snap Ring	2	
7	420650310	Oil Seal	1	
8	420620175	Water Pump Shaft Ass'y	1	Includes 8 to 9
9	420650370	Rotary Seal	1	
10	420222505	Water Impeller	1	
11	420222785	Water Pump Housing	1	
12	420651190	Gasket	1	
13	420230415	Seal Washer	1	
14	420641238	Flanged Torx Screw M6 X 25	4	
15	420250640	Copper Washer	1	
16	420841921	Plug Screw M12 X 1.5	1	
17	420927837	Spacer Ass'y	2	Includes 17 to 18
18	420650300	Thermostat Gasket	2	
19	420222690	Thermostat Cover	2	
20	420641238	Flanged Torx Screw M6 X 25	4	
21	420650255	Gasket Ring	2	
22	420441621	SCREW M5 X 16	2	
23	420822690	Rear Head Hose	1	
24	420822695	Front Head Hose	1	
25	709200273	Y-Fitting	1	
26	420251578	Clamp	4	
27	278001016	Temperature Sensor	1	

1000

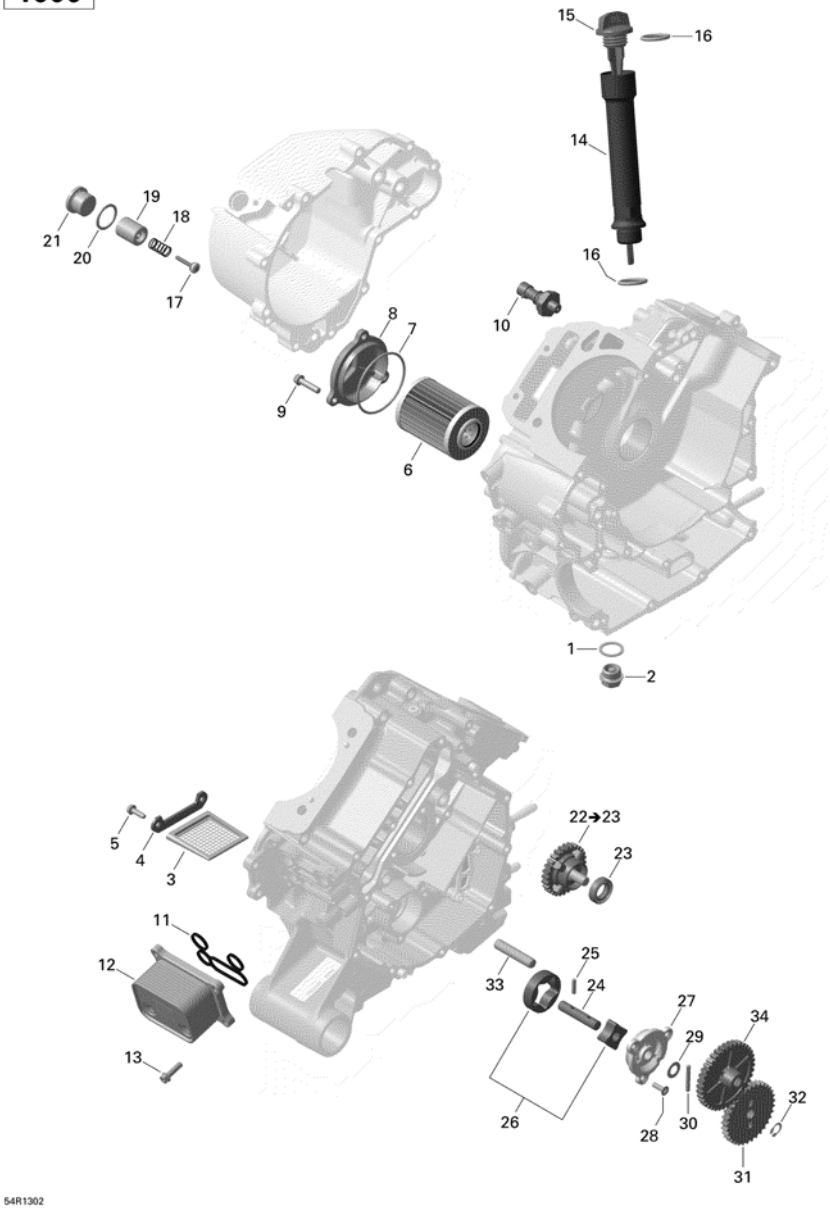
15
16
14
16
19
18
21
20
17
10
8
7
9
6
1
2
5
4
3
22→23
23
11
12
13
33
25
24
27
29
34
26
28
30
32
31
54R1302

Part List

COMMANDER 2013 STD, DPS, XT, X 1000 EFI / Engine Lubrication

ITEM	PART NUMBER	PART NAME	QUANTITY	REMARKS
1	420552280	O-Ring	1	
2	420840277	DRAIN PLUG M18 X 1.5	1	
3	420256321	Oil Sieve	1	
4	420612070	Cover Sieve	1	
5	420941925	Tapping Screw M5 X 16	2	
6	420256188	Oil Filter	1	
7	420230920	O-Ring	1	
8	420210418	Oil Filter Cover	1	
9	420641238	Flanged Torx Screw M6 X 25	3	
10	420256915	Oil Pressure Switch	1	
11	420430325	Oil Seal	1	
12	420890180	Oil Radiator	1	
13	420641048	Flanged Torx Screw M6 X 16	4	
14	420856922	Oil Lever Tube	1	
15	420856810	Oil Dipstick	1	
16	420631640	O-Ring	2	
17	420656370	Pressure Relief Valve	1	
18	420939485	Compression Spring	1	
19	420256486	Housing Valve	1	
20	420650465	Gasket Ring	1	
21	420640270	Screw Plug	1	
22	420434307	Idle Gear Ass'y, 28 Teeth	1	Includes 22 to 23
23	420430555	Oil Seal	1	
24	420237059	Oil Pump Shaft	1	
25	420232730	Needle Pin	1	
26	420256348	Oil Pump Rotor	1	
27	420210641	Oil Pump Cover	1	
28	420640821	Torx Screw M5 X 16	3	
29	420827590	Thrust Washer	1	
30	420232430	Needle Pin	1	
31	420434320	Oil Pump Gear, 33 Teeth	1	
32	420245330	Snap Ring	1	
33	420229302	Location Pin	1	
34	420434300	Idle Gear, 38 Teeth	1	

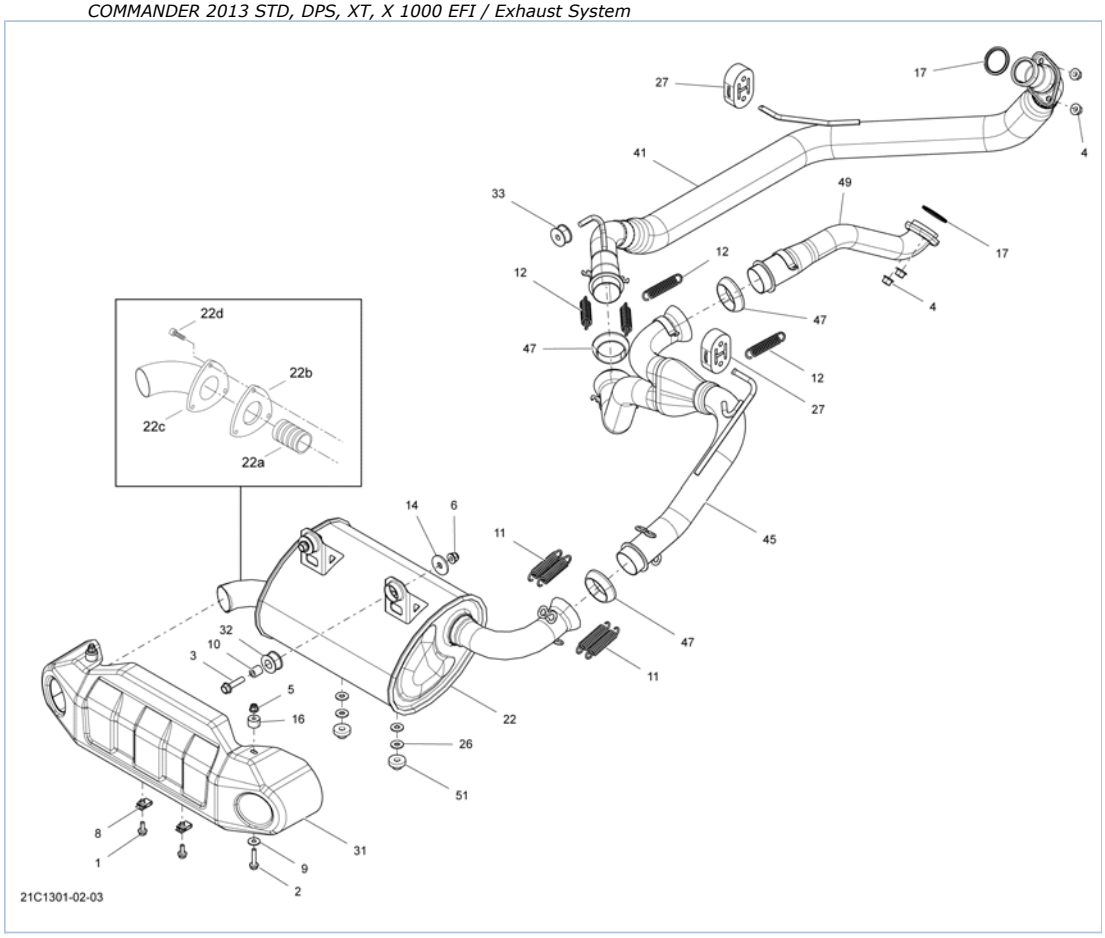
27
17
4
41
33
49
17
12
12
4
47
47
12
27
22d
22b
22c
22a
14
6
11
45
32
10
3
47
5
11
16
22
26
51
8
31
1
9
2
21C1301-02-03

Part List

COMMANDER 2013 STD, DPS, XT, X 1000 EFI / Exhaust System

ITEM	PART NUMBER	PART NAME	QUANTITY	REMARKS
1	207661644	Hex. Flanged Screw M6 X 16	2	
2	207663044	Hex. Flanged Screw M6 X 30	2	
3	207683544	Hex. Flanged Screw M8 X 35	2	
4	233081416	Hex. Flanged Nut M8	4	
5	233261414	Hex. Flanged Elastic Nut M6	2	
6	233281414	Hex. Flanged Elastic Nut M8	2	
8	250000048	Pannel Nut M6 X 1.0	2	
9	250200082	Flat Washer	2	
10	293900106	Bushing	2	
11	415107100	Spring	4	
12	415107100	Spring	4	
14	503032900	Washer	2	
16	707000882	Bushing	2	
17	707600317	Gasket	2	
22	707600545	Muffler Ass'y	1	
22	707600753	Muffler Ass'y	1	Europe
26	XXX	Washer	4	
27	707600638	Rubber Bumper	2	
31	707600675	Deflector	1	
32	707600701	Anti-Vibration Rubber	2	
33	707600702	Anti-Vibration Rubber	1	
41	707601013	Front Head Pipe	1	
45	707601020	Link Head Pipe	1	
47	707601033	Exhaust Gasket	3	
49	707601016	Rear Head Pipe	1	
51	709200285	Grommet	2	
22a	715900089	Spark Arrestor	1	
22b	715900090	Gasket	1	
22c	715900091	Muffler Outlet End Piece	1	
22d	205062060	Socket Head Screw M6 X 20	3	

COMMANDER 2013 STD, DPS, XT, X 1000 EFI / Air Intake

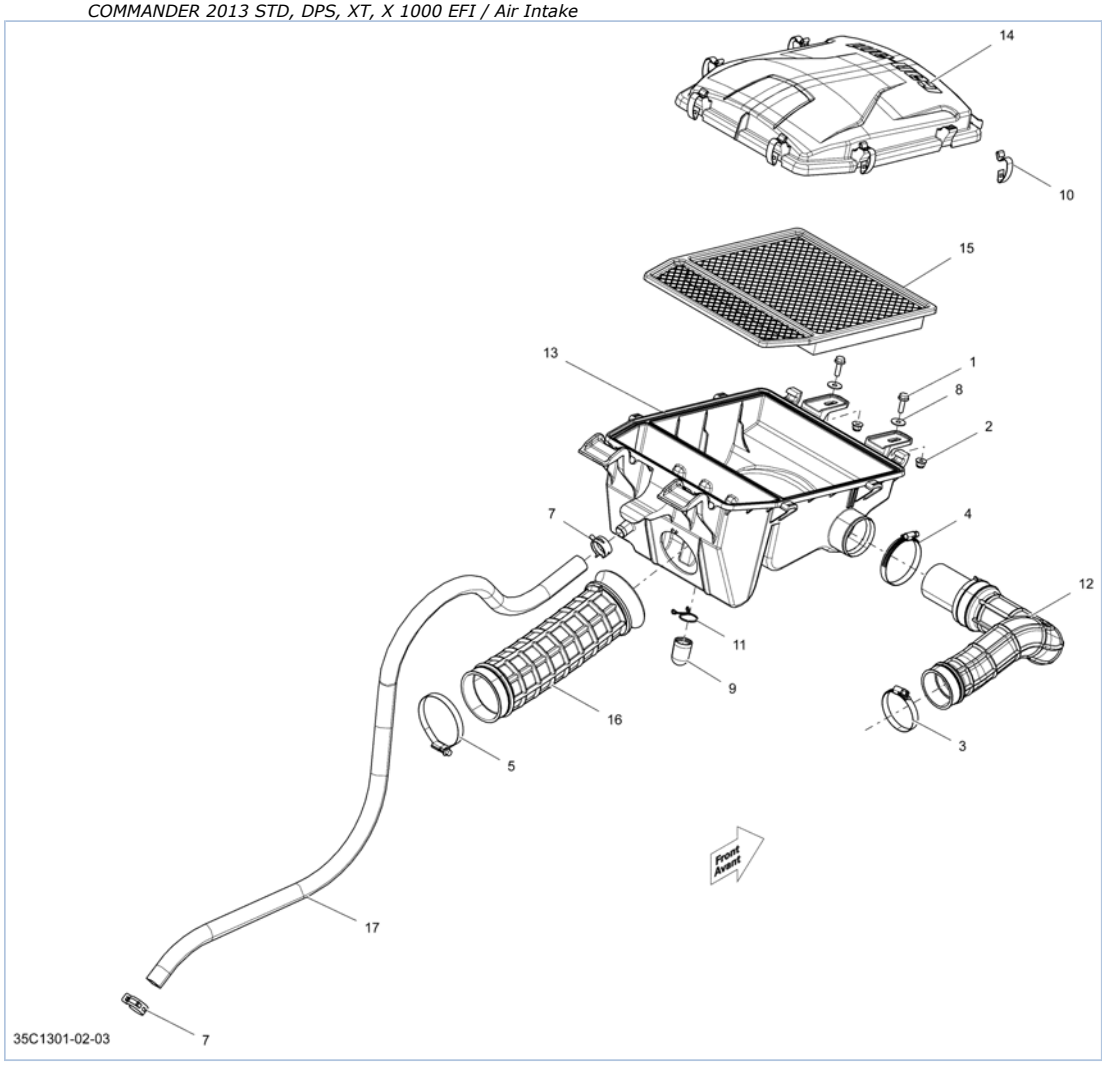

Part List

COMMANDER 2013 STD, DPS, XT, X 1000 EFI / Air Intake

ITEM	PART NUMBER	PART NAME	QUANTITY	REMARKS
1	207662044	Hex. Flanged Screw M6 X 20	2	
2	233261414	Hex. Flanged Elastic Nut M6	2	
3	293650078	Norma Clamp	1	
4	293650079	Norma Clamp	1	
5	293650091	Norma Clamp	1	
7	293650213	Norma Spring Clamp	2	
8	391302000	Flat Washer	2	
9	707800080	DRAIN TUBE	1	
10	707800249	COVER BRACKET	6	
11	293650091	Norma Clamp	1	
12	707800322	Intake Adaptor	1	
13	707800325	AIR INTAKE SILENCER BASE	1	
14	707800326	Air Intake Silencer Cover	1	
15	707800327	Air Filter	1	
16	707800329	Intake Adaptor	1	
17	707800411	Hose 15.88 mm	AR	

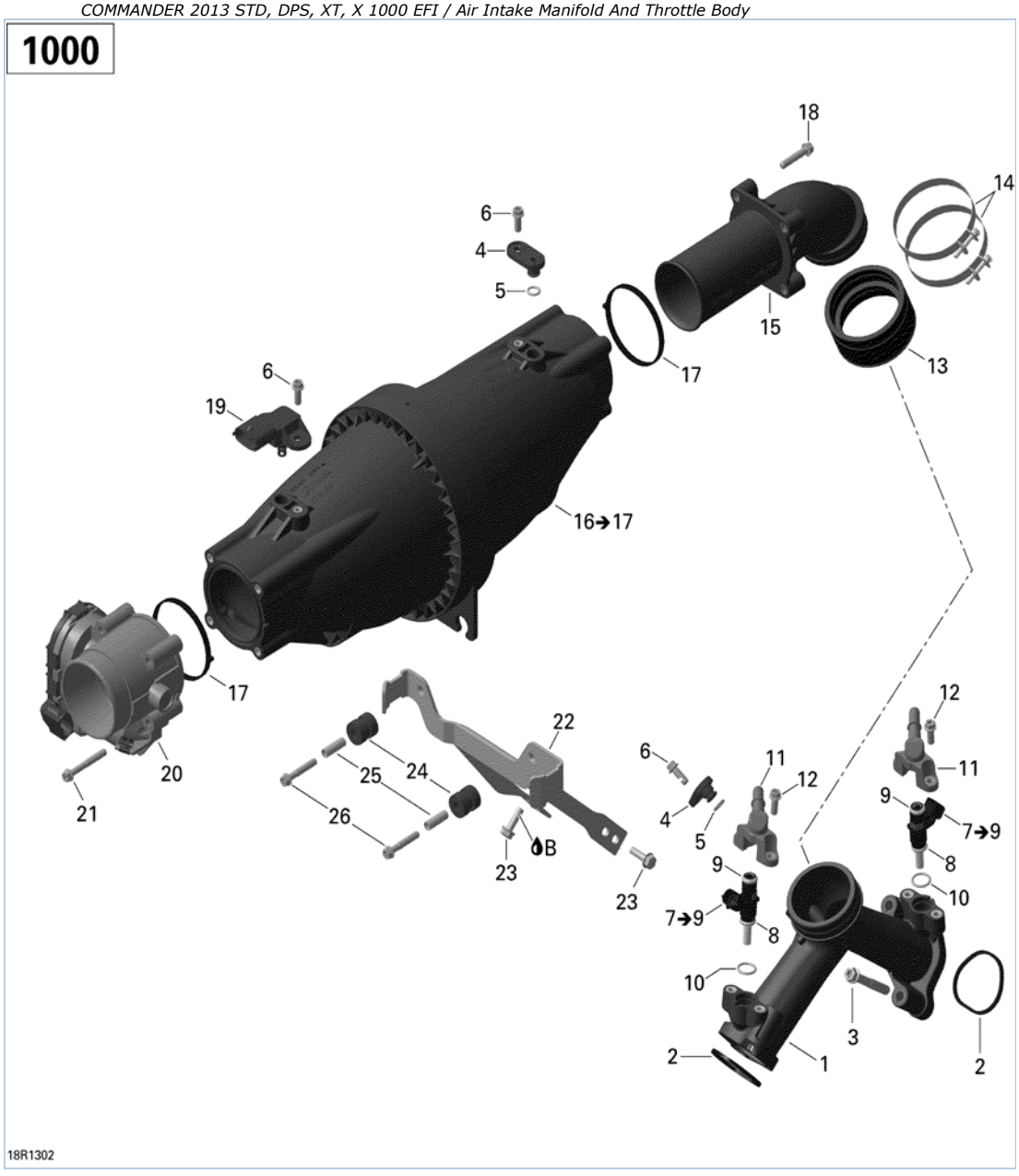
1000
18
14
6
4
5
15
13
17
6
19
16➔17
17
20
21
22
25
24
26
23
B
23
6
4
5
11
12
12
11
9
7➔9
8
10
9
7➔9
8
10
3
2
1
2
18R1302

Part List

COMMANDER 2013 STD, DPS, XT, X 1000 EFI / Air Intake Manifold And Throttle Body

ITEM	PART NUMBER	PART NAME	QUANTITY	REMARKS
1	420667520	Air Intake Manifold	1	
2	420630642	Gasket	2	
3	420641213	Flanged Torx Screw M8 X 55	4	
4	420460980	Cover	2	
5	420230461	O-Ring	2	
6	420440147	Flanged Hex. Screw M6 X 12	3	
7	420874830	Injection Valve Ass'y	2	Includes 7 to 9
8	420431890	O-Ring	2	
9	420631220	O-Ring	2	
10	420631295	O-Ring	2	
11	420874901	Fuel Rail	2	
12	420641048	Flanged Torx Screw M6 X 16	4	
13	420267040	INTAKE NECK	1	
14	420251209	Clamp	2	
15	420667522	Air Inlet Manifold	1	
16	420667526	Air Inlet Manifold Ass'y	1	Includes 16 to 17
17	420431900	Gasket	2	
18	420241947	Hex. Screw M6 X 30	4	
19	707000564	Pressure And Temperature Sensor	1	
20	420892595	Throttle Body	1	
21	420641198	Flanged Torx Screw M6 X 45	4	
22	420651520	Support	1	
23	420441311	HEX.SCREW M6 X 20	2	
24	420660090	Rubber Bracket	2	
25	420847971	Spacer	2	
26	420441457	Hex. Screw M6 X 35	2	

COMMANDER 2013 STD, DPS, XT, X 1000 EFI / Fuel System

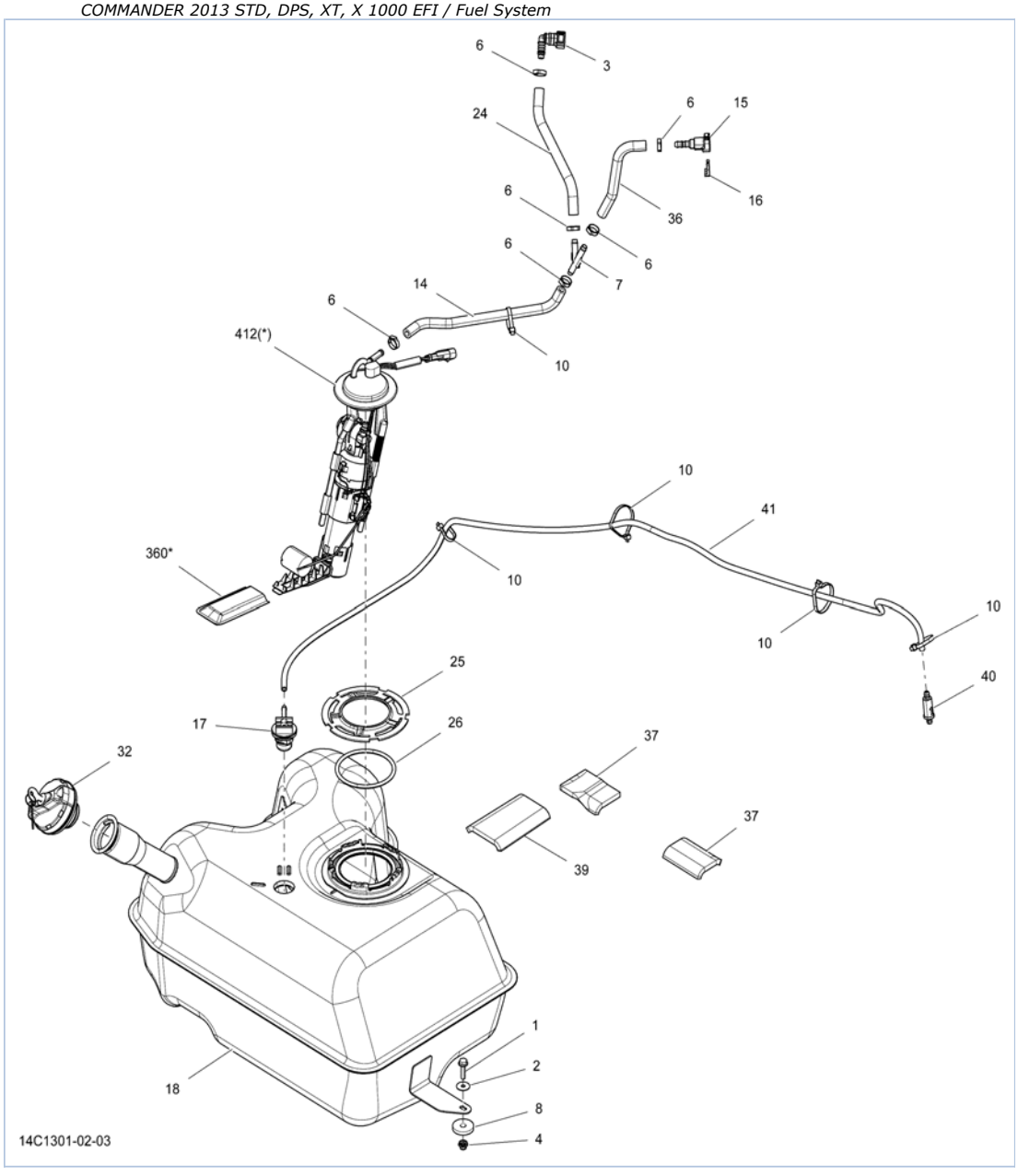

Part List

COMMANDER 2013 STD, DPS, XT, X 1000 EFI / Fuel System

ITEM	PART NUMBER	PART NAME	QUANTITY	REMARKS
1	207662544	Hex. Flanged Screw M6 X 25	2	
2	224060201	Flat Washer	2	
3	275500700	Quick Attach 90 deg	1	
4	293450274	Insert	2	
6	293650046	Oetiker Clamp	6	
7	293710136	Y-Fitting, 5/16''	1	
8	293830037	Rubber Washer	2	
10	414115200	Tie-Rap 180 mm	5	
14	709000393	Fuel Line	AR	
15	709000125	Female Quick Fitting Ass'y	1	
16	513033135	Locking Clip	1	
17	709000127	Rollover Valve	1	
18	709000196	Fuel Tank	1	
24	709000393	Fuel Line	AR	
25	709000274	Ring	1	
26	709000275	O-Ring	1	
32	709000268	Cap	1	
32	715001124	Fuel Cap Kit	1	Europe
36	709000393	Fuel Line	AR	
37	709000288	NEOPRENE PAD	2	
39	709000289	NEOPRENE PAD	1	
40	709000330	Filter	1	
41	415080200	Hose, Polyurethane	AR	
360	709000389	Fuel Pre-Filter	1	
412	709000362	Fuel Pump	1	

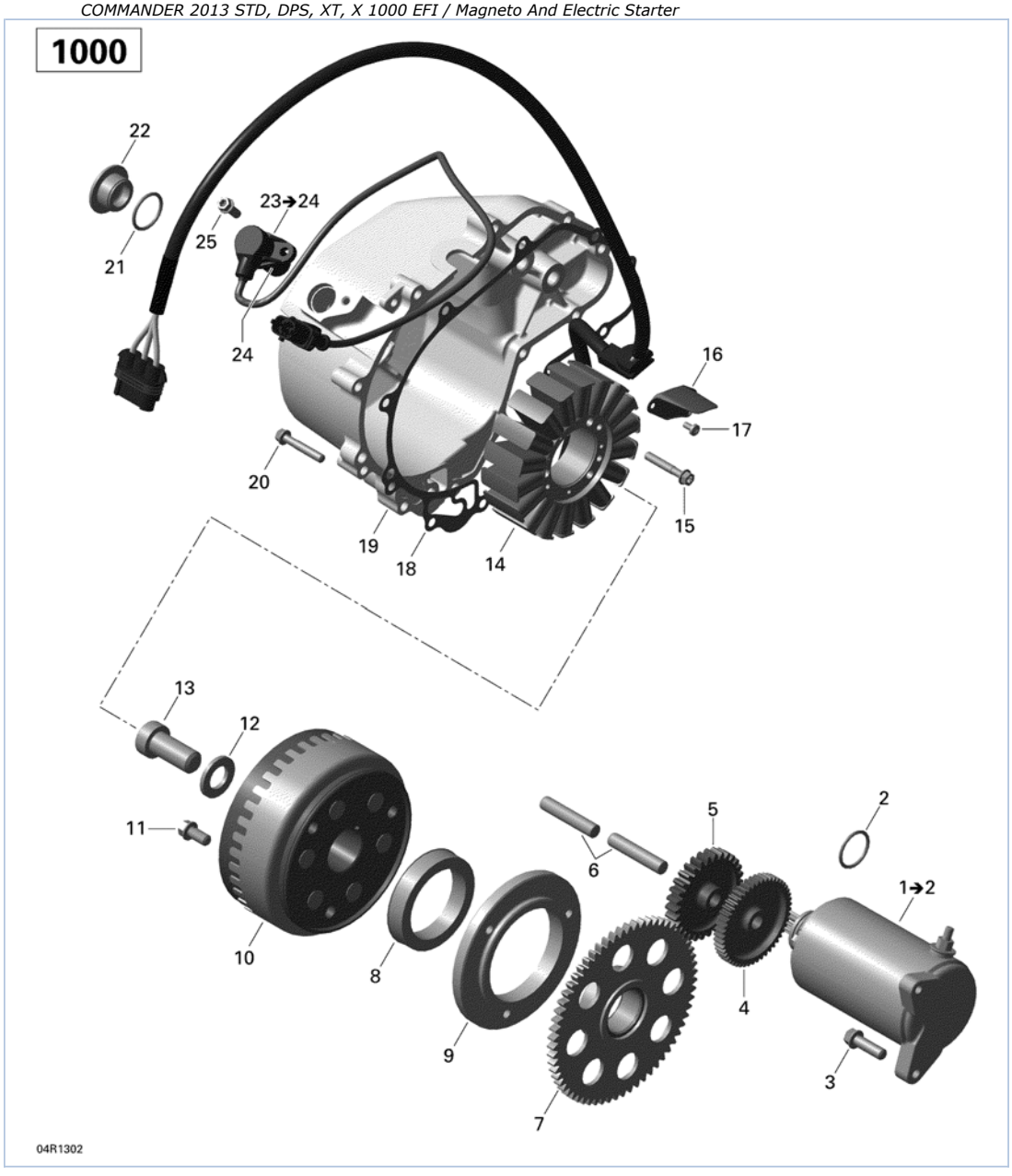
1000
22
21
23➔24
25
24
16
17
20
15
19
18
14
13
12
11
10
8
9
6
5
2
1➔2
4
3
7
04R1302

Part List

COMMANDER 2013 STD, DPS, XT, X 1000 EFI / Magneto And Electric Starter

ITEM	PART NUMBER	PART NAME	QUANTITY	REMARKS
1	420684560	Starter Ass'y	1	Includes 1 to 2
2	420250140	O-Ring	1	
3	420440372	Flanged Torx Screw M8 X 25	1	
4	420634741	Double Gear	1	
5	420634605	Gear, 30 Teeth	1	
6	420229302	Location Pin	2	
7	420434235	Free Wheel Gear, 64 Teeth	1	
8	420659112	Sprag Clutch	1	
9	420659261	Sprag Clutch Housing	1	
10	420685649	Flywheel	1	
11	420440852	Flanged Torx Screw M8 X 16	3	
12	420627270	Shim	1	
13	420241549	Socket Head Screw M16 X 35	1	
14	420685632	Stator Plate	1	
15	420641258	Flanged Torx Screw M6 X 35	3	
16	420251880	Cable Inner Cover	1	
17	420240195	Tapping Screw M4 X 8	2	
18	420651200	Gasket	1	
19	420611132	Cover	1	
20	420641258	Flanged Torx Screw M6 X 35	11	
21	420430782	O-Ring	1	
22	420241630	Screw Plug	1	
23	420966570	Crankshaft Position Sensor Ass'y	1	Includes 23 to 24
24	420431580	O-Ring	1	
25	420641048	Flanged Torx Screw M6 X 16	1	

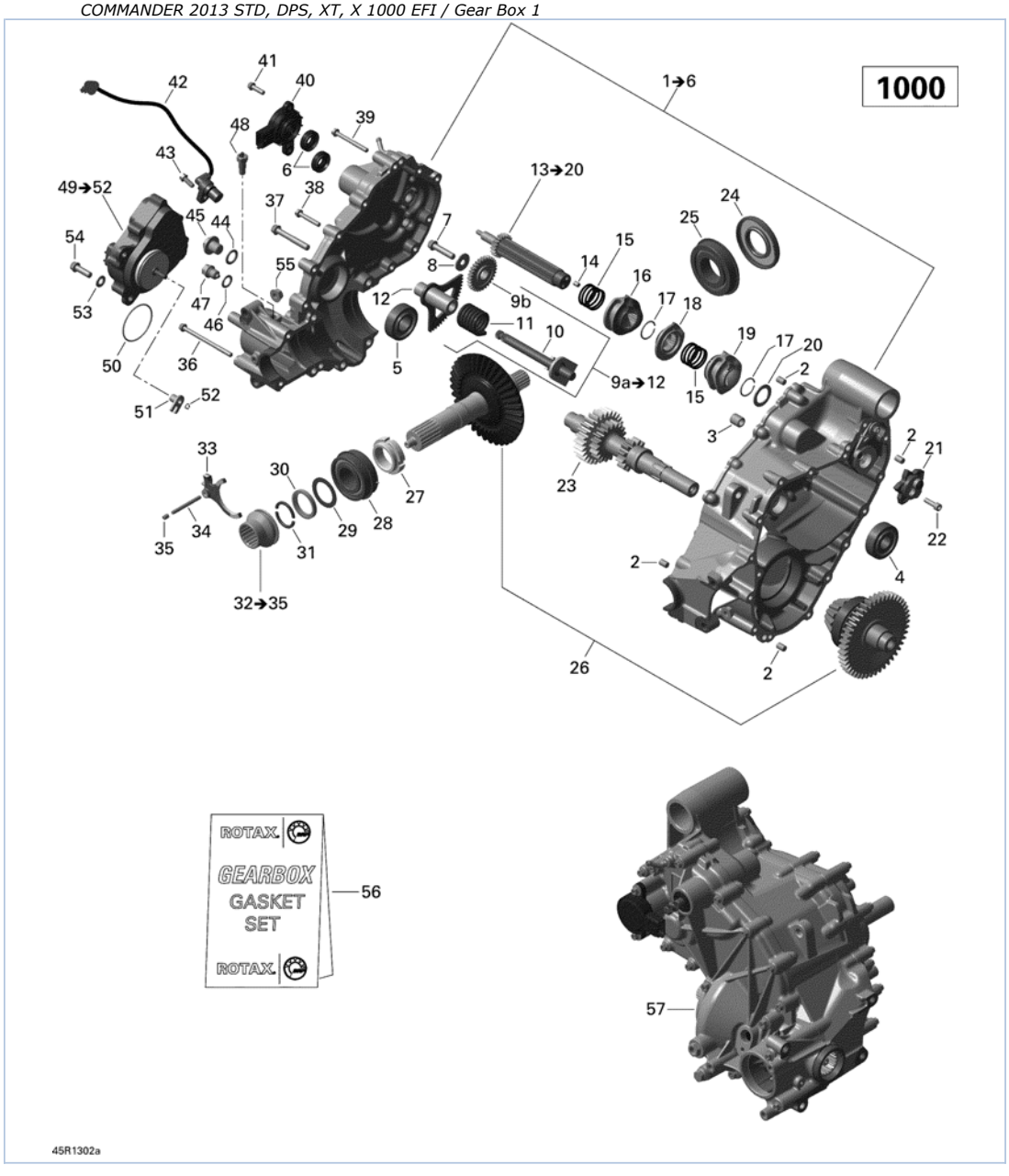
1000
1➔6
13➔20
9a➔12
49➔52
32➔35
ROTAX
GEARBOX
GASKET
SET
ROTAX
56
57
45R1302a

Part List

COMMANDER 2013 STD, DPS, XT, X 1000 EFI / Gear Box 1

ITEM	PART NUMBER	PART NAME	QUANTITY	REMARKS
1	XXX	Gear Housing Ass'y	1	Includes 1 to 6 See Item 57, Gear Box
2	420632010	Center Pin 8 X 12	2	
3	XXX	Dowel		See Item 57, Gear Box
4	420932815	BALL BEARING 6303E	1	
5	420932433	Ball Bearing	1	
6	420250450	Oil Seal	2	
7	420641188	Flanged Torx Screw M8 X 35	1	
8	420227937	PLAIN WASHER	1	
9a	420620929	SHIFT SHAFT ASS'Y	1	Includes 9a to 12
9b	XXX	Intermediate Gear, 30 Teeth	1	
10	XXX	SHIFT SHAFT	1	
11	XXX	Spring	1	
12	XXX	Tooth Segment	1	
13	420657230	SHIFT DRUM ASS'Y	1	Includes 13 to 20
14	XXX	Needle Pin	1	
15	XXX	Compression Spring	2	
16	XXX	Gear Shifting Gate	1	
17	XXX	Retaining Ring	2	
18	XXX	Disengagement Gate	1	
19	XXX	Gear Shifting Gate	1	
20	XXX	Thrust Washer	1	
21	XXX	Index Washer	1	
22	420241932	ALLEN SCREW M6 X 20	1	
23	420620896	Countershaft	1	
24	420831957	Oil Seal	1	
25	XXX	Ball Bearing	1	See Item 57, Gear Box
26	XXX	Drive Axle Set	1	See Item 57, Gear Box
27	XXX	Groove Nut	1	See Item 57, Gear Box
28	XXX	Ball Bearing	1	See Item 57, Gear Box
29	XXX	Shim Set	1	See Item 57, Gear Box
30	XXX	Angular Ring	1	See Item 57, Gear Box
31	XXX	Half Ring	2	See Item 57, Gear Box
32	420257676	Shifting Sleeve Kit	1	Includes 32 to 35
33	XXX	Shifting Fork	1	
34	XXX	Needle Pin	1	
35	420841772	Set Screw M6 X 8	1	
36	420641228	Flanged Torx Screw M6 X 85	2	
37	420641213	Flanged Torx Screw M8 X 55	5	
38	420641258	Flanged Torx Screw M6 X 35	8	
39	420440702	Flanged Torx Screw M6 X 55	2	
40	420266167	Angle Rotation Sensor	1	
41	420641048	Flanged Torx Screw M6 X 16	2	
42	420265626	SPEED SENSOR	1	
43	420641048	Flanged Torx Screw M6 X 16	1	
44	420650350	O-Ring	1	
45	420241660	Plug Screw M14 X 1.5	1	
46	420250640	Copper Washer	1	
47	420241786	Magnetic Drain Plug	1	
48	420640192	Position Switch	1	
49	415129174	Actuator Ass'y	1	Includes 49 to 52
50	415129175	Shifting Fork	1	
51	415129176	Circlip	1	
52	293300117	O-Ring	1	
53	420250311	Flat Washer 8.4 mm	3	
54	420440372	Flanged Torx Screw M8 X 25	3	

55	420842619	Hex. Nut M8	4	
56	420684139	Gasket Set	1	
57	420684786	Gear Box	1	

1000

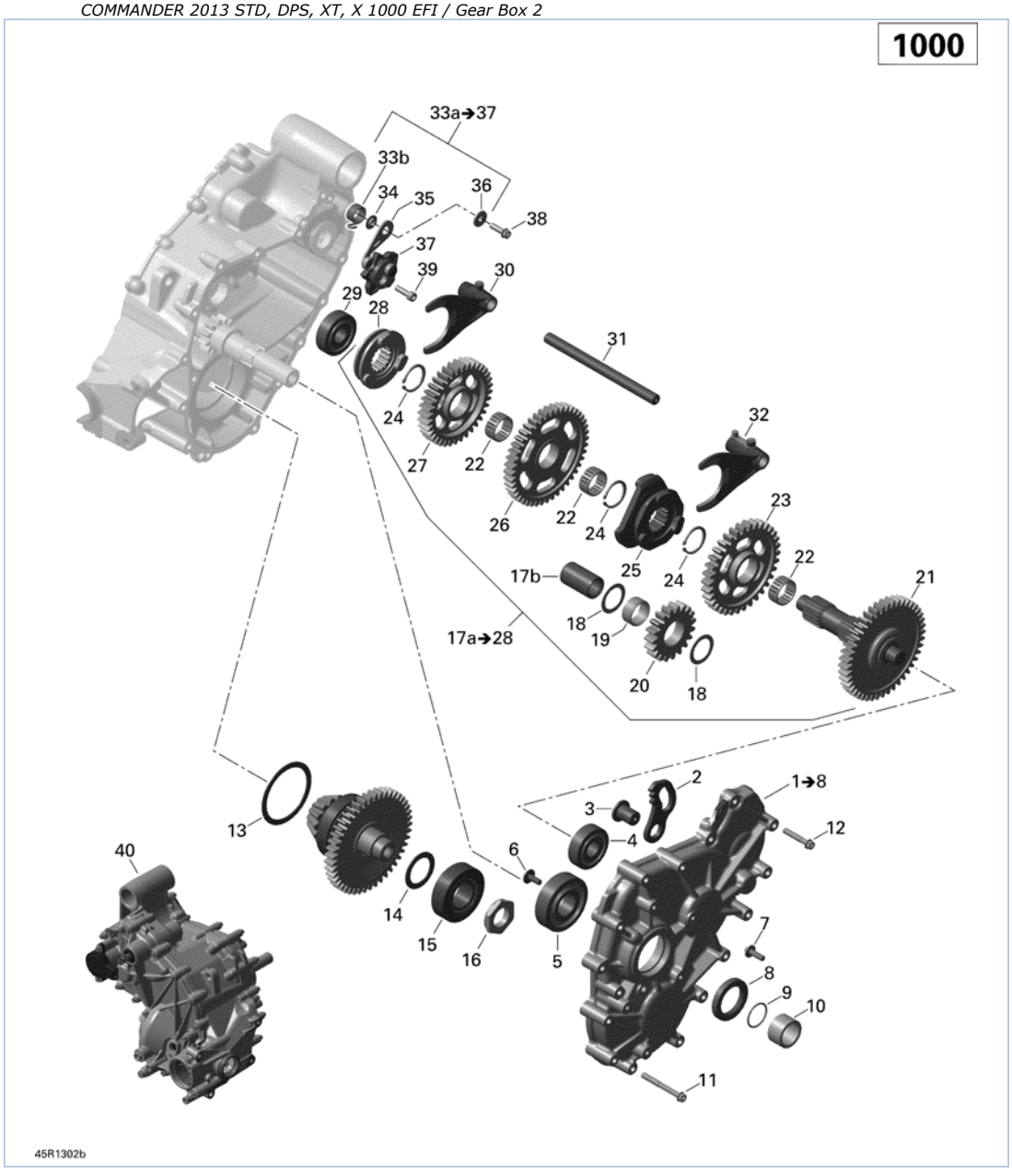
33a➔37
33b
34
35
36
38
37
39
30
29
28
31
24
27
22
26
22
24
32
23
25
24
22
21
17b
18
19
17a➔28
20
18
13
2
1➔8
3
12
4
40
6
14
15
16
5
7
8
9
10
11
45R1302b

Part List

COMMANDER 2013 STD, DPS, XT, X 1000 EFI / Gear Box 2

ITEM	PART NUMBER	PART NAME	QUANTITY	REMARKS
1	XXX	LH Gear Housing Ass'y	1	Includes 1 to 8 See Item 40, Gear Box
2	420257658	Parking Lock Lever	1	
3	420647120	COLLAR SLEEVE	1	
4	420932815	BALL BEARING 6303E	1	
5	420932825	Ball Bearing	1	
6	420241529	Torx Screw M6 X 16	1	
7	420441430	Distance Screw M6	1	
8	420950087	Oil Seal	1	
9	420631610	O-Ring	1	
10	420247117	Distance Ring	1	
11	420440702	Flanged Torx Screw M6 X 55	13	
12	420641258	Flanged Torx Screw M6 X 35	3	
13	XXX	Shim Set	1	See Item 40, Gear Box
14	XXX	Shim Set	1	See Item 40, Gear Box
15	XXX	ROLLER BEARING	1	See Item 40, Gear Box
16	XXX	Hex. Nut M24 X 1.5	1	See Item 40, Gear Box
17a	420281270	Gear Set	1	Includes 17a to 28
17b	XXX	INTERMEDIATE GEAR SHAFT	1	
18	420944479	Thrust Washer	2	
19	420932930	Needle Bearing	1	
20	XXX	Intermediate Gear, 19 Teeth	1	
21	XXX	Main shaft	1	
22	420632070	Needle Bearing	3	
23	420434870	Gear Pinion, 34 Teeth	1	
24	420845771	Retaining Ring	3	
25	420257951	Shifting Sleeve	1	
26	420434861	Gear Pinion, 44 Teeth	1	
27	420434850	Gear Pinion, 36 Teeth	1	
28	420257942	Shifting Sleeve	1	
29	420932815	BALL BEARING 6303E	1	
30	420257628	SHIFT FORK	1	
31	420258386	FORK SPINDLE	1	
32	420257618	SHIFT FORK	1	
33a	420248532	INDEX LEVER ASS'Y	1	Includes 33a to 37
33b	XXX	Index Spring	1	
34	XXX	Step Ring	1	
35	XXX	INDEX LEVER	1	
36	XXX	Washer	1	
37	XXX	Index Washer	1	
38	420440207	Flanged Torx Screw M6 X 20	1	
39	420241939	ALLEN SCREW M6 X 20	1	
40	420684786	Gear Box	1	

1000

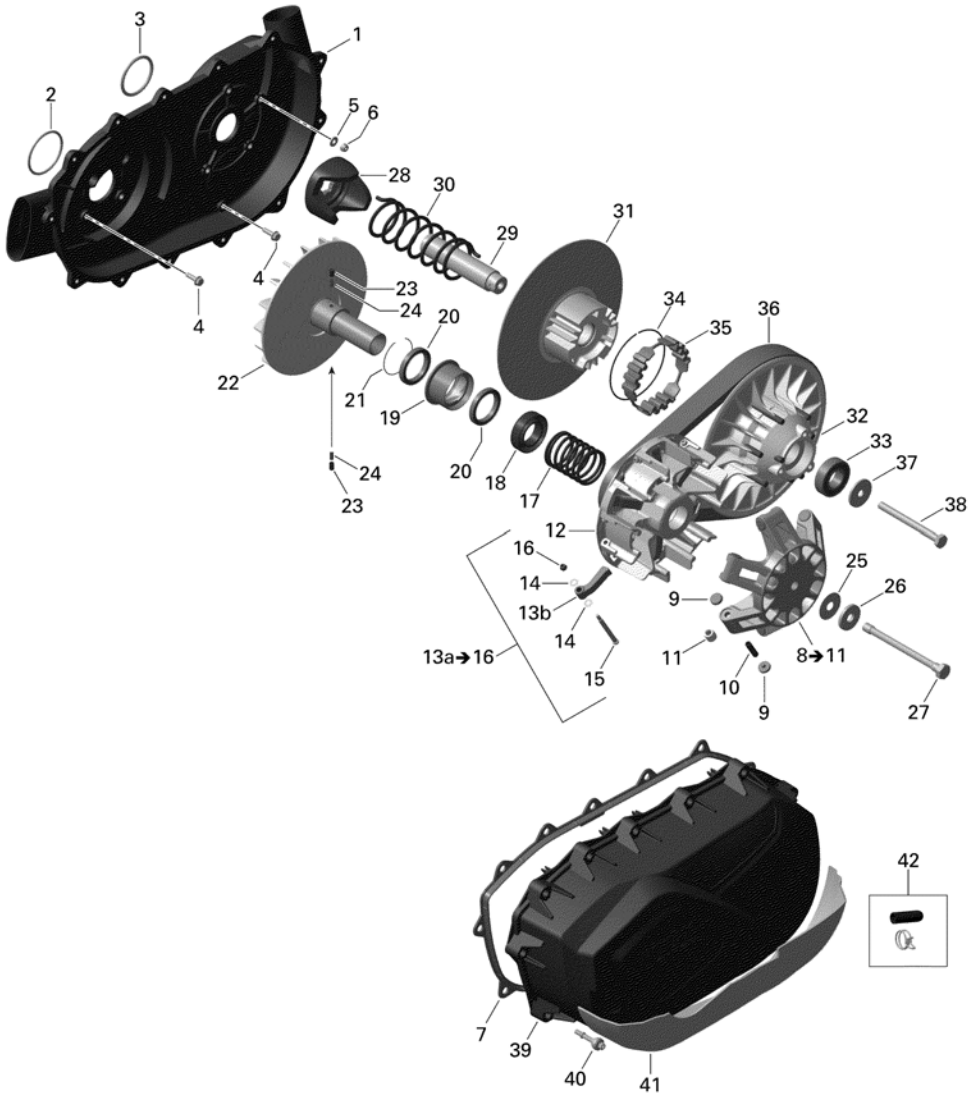
3
1
2
5
6
28
30
29
31
4
4
23
24
20
34
35
36
22
21
19
20
18
17
32
33
37
38
24
23
12
16
14
13b
14
15
13a→16
9
11
10
9
25
26
8→11
27
42
7
39
40
41
19R1302

Part List

COMMANDER 2013 STD, DPS, XT, X 1000 EFI / Transmission

ITEM	PART NUMBER	PART NAME	QUANTITY	REMARKS
1	420611408	CVT Air Guide	1	
2	420430408	O-Ring	1	
3	420631088	O-Ring	1	
4	420441311	HEX.SCREW M6 X 20	8	
5	224061121	Flat Washer	1	
6	232561414	Elastic Stop Nut M6	1	
7	420430126	Gasket	1	
8	420280522	Governor Cup Ass'y	1	Includes 8 to 11
9	420281296	SLIDER SHOE SET	1	
10	417223257	Roller Axle	6	
11	417223387	Roller	6	
12	420280467	Outher Haft	1	
13a	420248496	Centrifugal Lever Kit	6	Includes 13a to 16
13b	XXX	Lever	6	
14	XXX	Thrust Washer	12	
15	XXX	Screw	6	
16	XXX	Lock Nut M5	6	
17	420238615	Compression Spring, Drive Pulley	1	
18	420627577	Spring Seat	1	
19	420257195	Drive Pulley Clutch	1	
20	420632377	Ball Bearing	2	
21	420245951	Retaining Ring	1	
22	420280374	Inner half	1	
23	420229577	Spring Sleeve	2	
24	420239134	Spring	2	
25	420627920	Thrust Washer	1	
26	420627765	Spring Washer	1	
27	420641855	HEX. SCREW M12 X 135	1	
28	420280472	Cam	1	
29	420220914	Driven Pulley Shaft	1	
30	420238179	Compression Spring	1	
31	420280238	Inner Half Ass'y	1	
32	420280178	Outer Half Pulley Ass'y	1	Includes 32 to 35
33	420932421	Ball Bearing	1	
34	420245910	Retaining Ring	1	
35	420660124	Torque Gear	1	
36	420280362	V-Belt	1	
37	420627590	Thrust Washer	1	
38	420441485	HEX. SCREW M10 X 110	1	
39	420611395	Variator Cover	1	
40	420440567	Hex. Distance Screw M6 X 30.5	7	
41	420975050	Heat Protection Mat	1	
42	707001179	Drain Plug Kit	1	

COMMANDER 2013 STD, DPS, XT, X 1000 EFI / Brakes

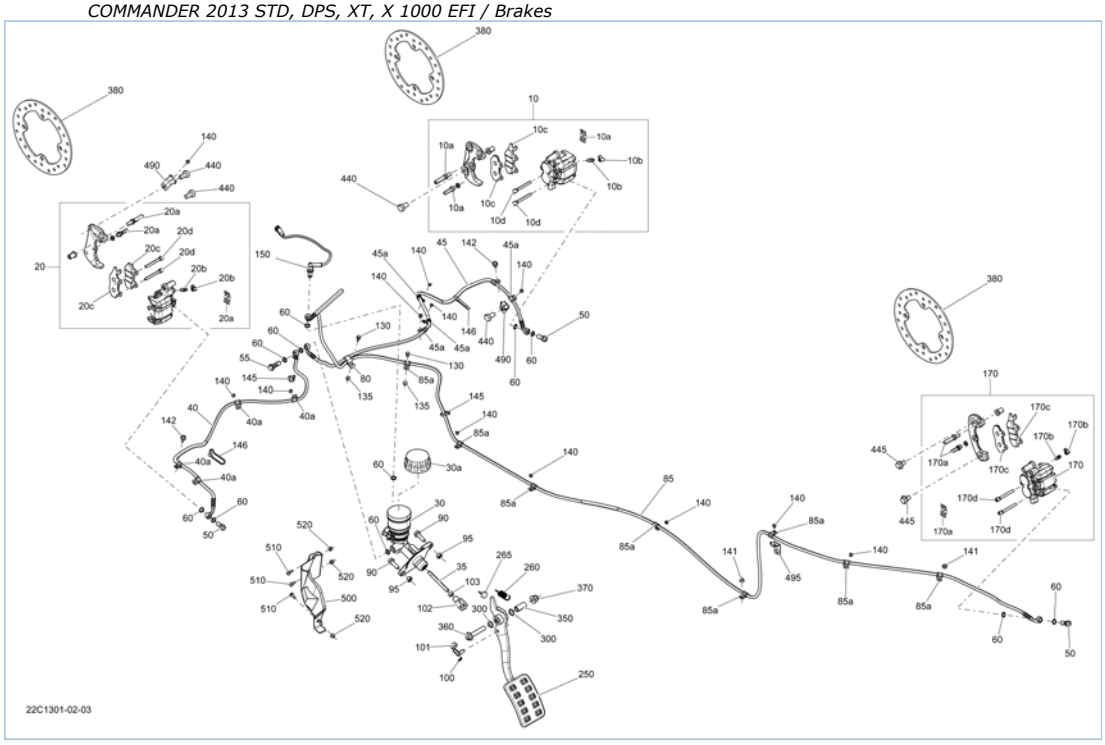

Part List

COMMANDER 2013 STD, DPS, XT, X 1000 EFI / Brakes

ITEM	PART NUMBER	PART NAME	QUANTITY	REMARKS
10	705600678	RH CALIPER	1	Includes 10 to 10d
10a	715500333	Spring Boot Kit	1	
10b	705600080	Bleeding Screw	1	
10c	715500336	Brake Pad Kit	1	
10d	715500337	PIN SET	1	
20	705600679	LH CALIPER	1	Includes 20 to 20d
20a	715500333	Spring Boot Kit	1	
20b	705600080	Bleeding Screw	1	
20c	715500335	Brake Pad Kit	1	
20d	715500337	PIN SET	1	
30	705600681	Master Cylinder	1	Includes 30 to 30a
30a	715500332	Diaphragm Cap Kit	1	
35	705600833	Master Cylinder Rod	1	
40	705600943	LH Front Hose	1	Includes 40 to 40a
40a	705600459	Clamp	4	
45	705600944	RH Front Hose	1	Includes 45 to 45a
45a	705600459	Clamp	5	
50	705600609	Banjo Bolt	3	
55	705600958	Banjo Bolt	1	
60	705600310	Copper Washer	11	
80	293650220	Clamp	1	
85	705600945	REAR FLEXIBLE HOSE	1	Includes 85 to 85a
85a	705600459	Clamp	8	
90	207682544	Hex. Flanged Screw M8 X 25	2	
95	232581414	Hex. Elastic Stop Nut M8	2	
100	371800700	Cotter Pin	1	
101	250400056	Pin	1	
102	705600100	YOKE	1	
103	232081414	Hex. Nut M8	1	
130	210251680	Hex. Forming Screw M5 X 16	2	
135	233251494	ELASTIC FLANGED NUT M5	2	
140	390402200	Pop Rivet 3/16"	12	
141	232561414	Elastic Stop Nut M6	2	
142	210261040	Hex. Flanged Screw M6 X 10	2	
145	414115200	Tie-Rap 180 mm	2	
146	414115200	Tie-Rap 180 mm	2	
150	705600946	Brake Switch	1	
170	705600872	REAR CALIPER	1	Includes 170 to 170d
170a	715500333	Spring Boot Kit	1	
170b	705600080	Bleeding Screw	1	
170c	715500336	Brake Pad Kit	1	
170d	715500337	PIN SET	1	
250	705600724	BRAKE PEDAL	1	
260	705600792	BRAKE PEDAL SPRING	1	
265	708000759	Rubber Stopper	1	
300	293300144	O-Ring	2	
350	705600815	Inner Spacer	1	
360	207605544	HEX. FLANGED SCREW M10 X 55	1	
370	233201414	Hex. Flanged Elastic Nut M10	1	
380	705600684	Brake Disc	3	
440	250000057	Hex. Screw M10 X 20, Scotch Grip	4	
445	250000060	Flanged Screw M10 X 16, Scotch Grip	2	

490	705601088	Bracket	2	
495	705601088	Bracket	1	
500	705600917	LH Front Deflector	1	
510	250000145	Torx Screw M5 X 14	3	
520	233251494	ELASTIC FLANGED NUT M5	3	

COMMANDER 2013 STD, DPS, XT, X 1000 EFI / Drive System, Front

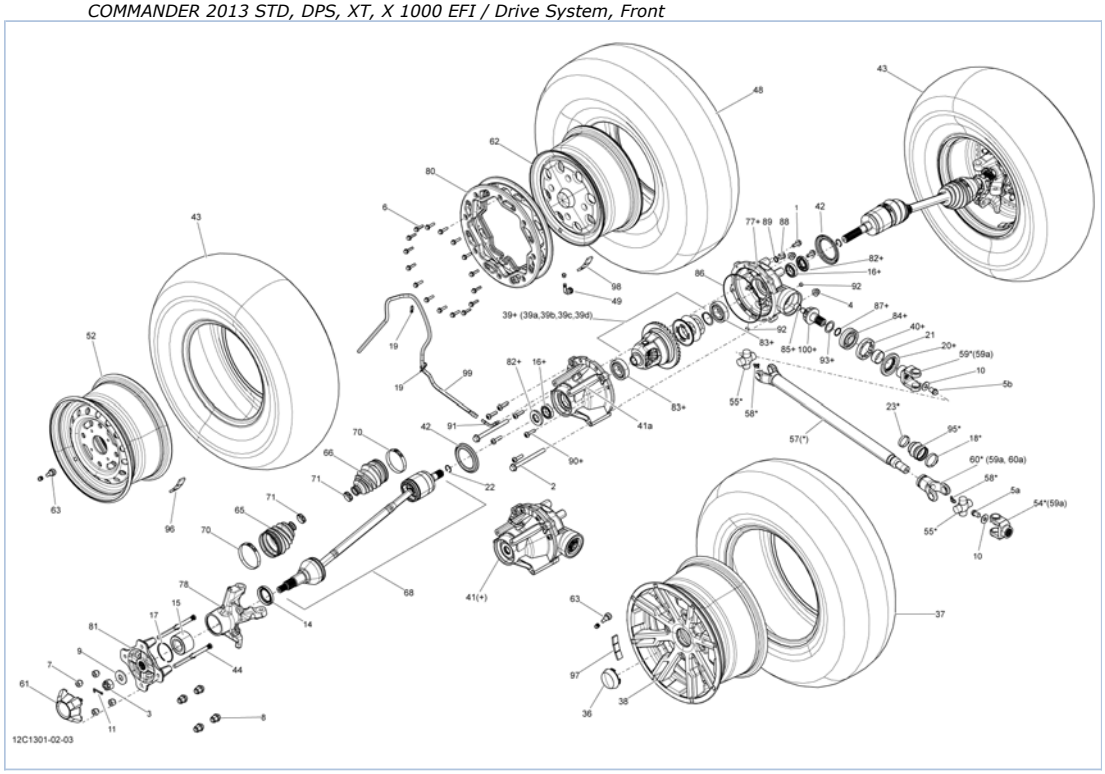

Part List

COMMANDER 2013 STD, DPS, XT, X 1000 EFI / Drive System, Front

ITEM	PART NUMBER	PART NAME	QUANTITY	REMARKS
1	207582044	Hex. Flanged Screw M8 X 20, Scotch Grip	2	
2	230602546	Hex. Flanged Screw M10 X 125	2	
3	250100047	HEX. CASTELLATED NUT M18	2	
4	233201416	Hex. Flanged Elastic Nut M10	2	
6	250000435	Hex. Flanged Screw M6 X 25	16	
7	250100042	Wheel Nut	8	STD Model
7	250100100	Black Wheel Nut M10 X 1.26	8	XT CAMO Model
8	250100082	Chrome Wheel Nut M10 X 1.25	8	XT Except CAMO
8	250100082	Chrome Wheel Nut M10 X 1.25	8	DPS
9	250200049	Spring Washer	2	
10	250200102	Flat Washer	2	
11	250400036	Cotter Pin	2	
14	293250246	O-Ring	2	
15	293350040	CONE BEARING	2	
16	293350044	Ball Bearing	2	
17	293370019	Circlip	2	
18	293650138	Oetiker Clamp	1	
19	293750002	Tie-Rap 142 mm	2	
20	705400027	Oil Seal	1	
21	705400036	Wear Ring	1	
22	705400042	Circlip	2	
23	509000045	Oetiker Gear Clamp	1	
36	705400504	Wheel Cap	2	XT CAMO
36	705400520	Wheel Cap	2	XT Except CAMO
36	705400520	Wheel Cap	2	DPS
37	705400631	FRONT TIRE	2	DPS
37	705400961	FRONT TIRE	2	XT Europe
38	705400632	FRONT RIM	2	DPS
38	705400919	Painted Front Rim	2	XT Silver
39	705400645	DIFFERENTIAL	1	STD Model
39	705400822	DIFFERENTIAL	1	X, XT, DPS Model
40	705400661	Nut	1	
41	705401135	FRONT DIFFERENTIAL ASS'Y	1	STD Model
41	705401241	FRONT DIFFERENTIAL ASS'Y	1	X, XT, DPS Model
42	705400780	WEAR SLEEVE	2	
43	705400781	FRONT TIRE	2	STD Model
43	705401046	FRONT TIRE	2	STD Model, Europe
44	705400791	WHEEL STUD	8	
48	705400846	FRONT TIRE	2	X Model, Black
48	705401130	FRONT TIRE	2	X Model, Europe
49	705400872	Rim Valve with Cap	2	X Model, Black
52	705401217	FRONT RIM	2	STD Model
54	715900121	Coupling Yoke	1	
55	715900183	U-Joint	2	
57	705400915	Axle Drive Ass'y	1	
58	715900184	Nipple	2	
59	715900116	Fixed Yoke Joint	1	
60	715900120	Spline Yoke	1	
61	705400921	Wheel Cap	2	STD Model
62	705400945	FRONT RIM	2	X Model, Black
63	705400193	Rim Valve with Cap	2	

65	XXX	BOOT KIT	1	
66	XXX	DIFFERENTIAL BOOT KIT	1	
68	705401106	RH Half Shaft	1	
68	705401105	LH Half Shaft	1	
70	XXX	Oetiker Clamp 71,1mm	2	
71	XXX	Oetiker Clamp 23mm	4	
77	705401136	Front Gear Cover	1	
78	705401204	LH Front Knuckle	1	
78	705401205	RH Front Knuckle	1	
80	705401248	Reinforcement Disc Plate	1	X Model, Yellow
80	705401247	Reinforcement Disc Plate	1	X Model, Black
81	705401314	WHEEL HUB	2	
82	705500255	Oil Seal	2	
83	705500259	Ball Bearing	2	
84	705500260	Ball Bearing	1	
85	705500261	Needle Bearing	1	
86	705500265	Seal	1	
87	705500267	O-Ring	1	
88	705500504	FILL LEVEL PLUG	1	
89	705500506	Copper Washer	1	
90	705500892	Screw	6	
91	705500893	Vent Valve	1	
92	705500894	Drain Plug	2	
93	705501162	PINION GEAR SHIM	1	
95	715900118	RUBBER BOOT KIT	1	
96	705501385	1/2 OZ Weight	AR	
97	705501385	1/2 OZ Weight	AR	
98	705501385	1/2 OZ Weight	AR	
99	415080200	Hose, Polyurethane	AR	
100	705501588	10 Teeth Pinion	1	
39a	703500049	Pinion Shim Kit	3	
39b	705500075	Pinion Gear Shim .022"	1	
39c	703500288	DIFFERENTIAL SHIM KIT	8	
39d	703500050	DIFFERENTIAL SHIM KIT	5	
41a	705400762	Front Cover	1	
59a	715900117	Snap Ring	8	
5a	250000359	Hex Flanged Screw M12 x 16	1	
5b	250000378	Hex Flanged Screw S.Grip M12 X 16	1	
60a	715900185	Cover	1	

COMMANDER 2013 STD, DPS, XT, X 1000 EFI / Front Suspension STD, XT, DPS

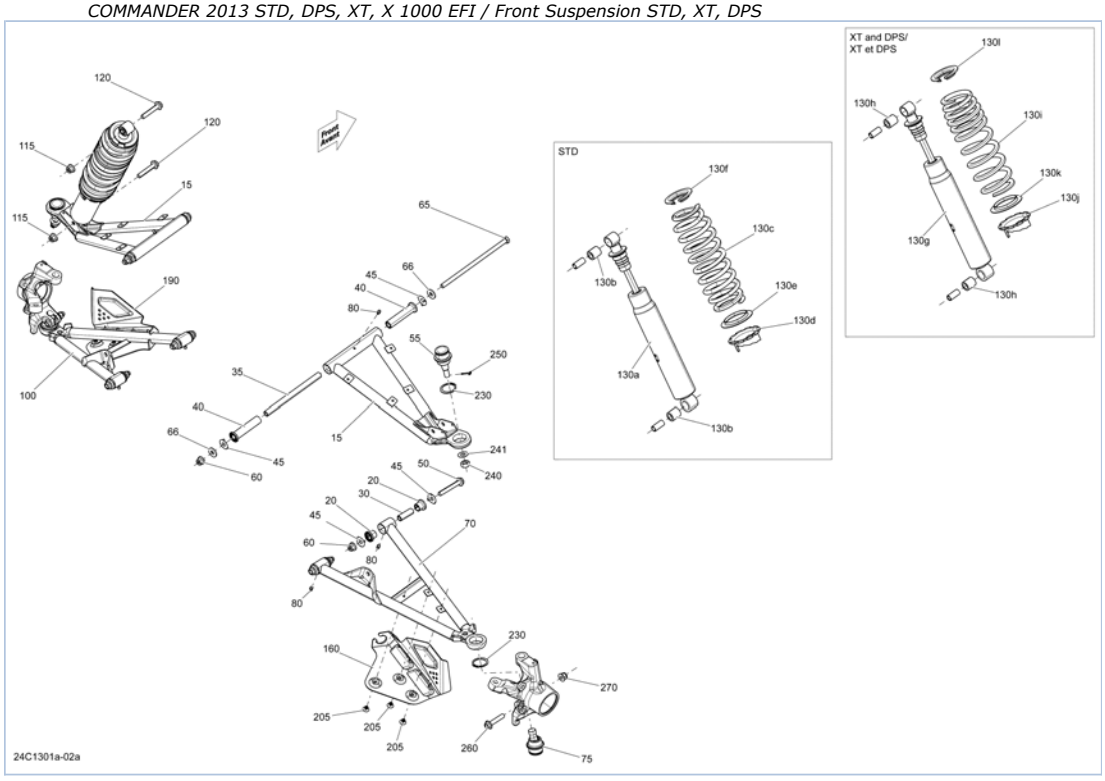

Part List

COMMANDER 2013 STD, DPS, XT, X 1000 EFI / Front Suspension STD, XT, DPS

ITEM	PART NUMBER	PART NAME	QUANTITY	REMARKS
15	706200796	Suspension Upper Arm	2	
20	706200181	Cushion	8	
30	706201587	INNER BUSHING	4	
35	706201061	INNER BUSHING	2	
40	706201062	Cushion	4	
45	706201063	Wear Plate	12	
50	207607046	HEX. FLANGED SCREW M10 X 70	4	
55	706201370	Upper Ball Joint	2	
60	233201416	Hex. Flanged Elastic Nut M10	6	
65	250000510	Hex. Cap Screw M10 X 225	2	
66	503190439	Washer	4	
70	706200744	RH Lower Suspension Arm	1	
75	706201371	Lower Ball Joint	2	
80	408200700	Grease Fitting	6	
100	706200742	LH Lower Suspension Arm	1	
115	233201416	Hex. Flanged Elastic Nut M10	4	
120	207605544	HEX. FLANGED SCREW M10 X 55	4	
130a	706200780	Front Shock	2	STD Model, Includes 130a to 130b
130b	715900122	Bushing	4	STD Model
130c	706201631	Front Spring, Silver-Yellow	2	STD Model
130d	706000910	Adjustable Ring	2	STD Model
130e	706000911	Protector Ring	2	STD Model
130f	706000567	Spring Stopper	2	STD Model
130g	706200782	Front Shock	2	XT and DPS Model, Includes 130g to 130h
130h	715900122	Bushing	4	XT and DPS Model
130i	706200860	Front Spring, Green-Black-Black	2	XT Yellow Model
130i	706201369	Front Spring, Red-Yellow	2	XT Magnesium Model
130i	706201367	Front Spring, Gold-Yellow	2	XT Red Model
130i	706201369	Front Spring, Red-Yellow	2	XT Camo Model
130i	706200860	Front Spring, Green-Black-Black	2	DPS Model
130j	706000910	Adjustable Ring	2	XT and DPS Model
130k	706000911	Protector Ring	2	XT and DPS Model
130l	706000567	Spring Stopper	2	XT and DPS Model
160	706201670	RH Protector	1	
190	706201669	LH Protector	1	
205	293150104	Pop Rivet 3/16"	6	
230	293370035	Circlip	4	
240	250100099	Nut M12	2	
241	706200281	HARDENED WASHER	2	
250	211400017	Cotter Pin	2	
260	207605044	HEX. FLANGED SCREW M10 X 50	2	
270	233201414	Hex. Flanged Elastic Nut M10	2	

COMMANDER 2013 STD, DPS, XT, X 1000 EFI / Front Suspension X

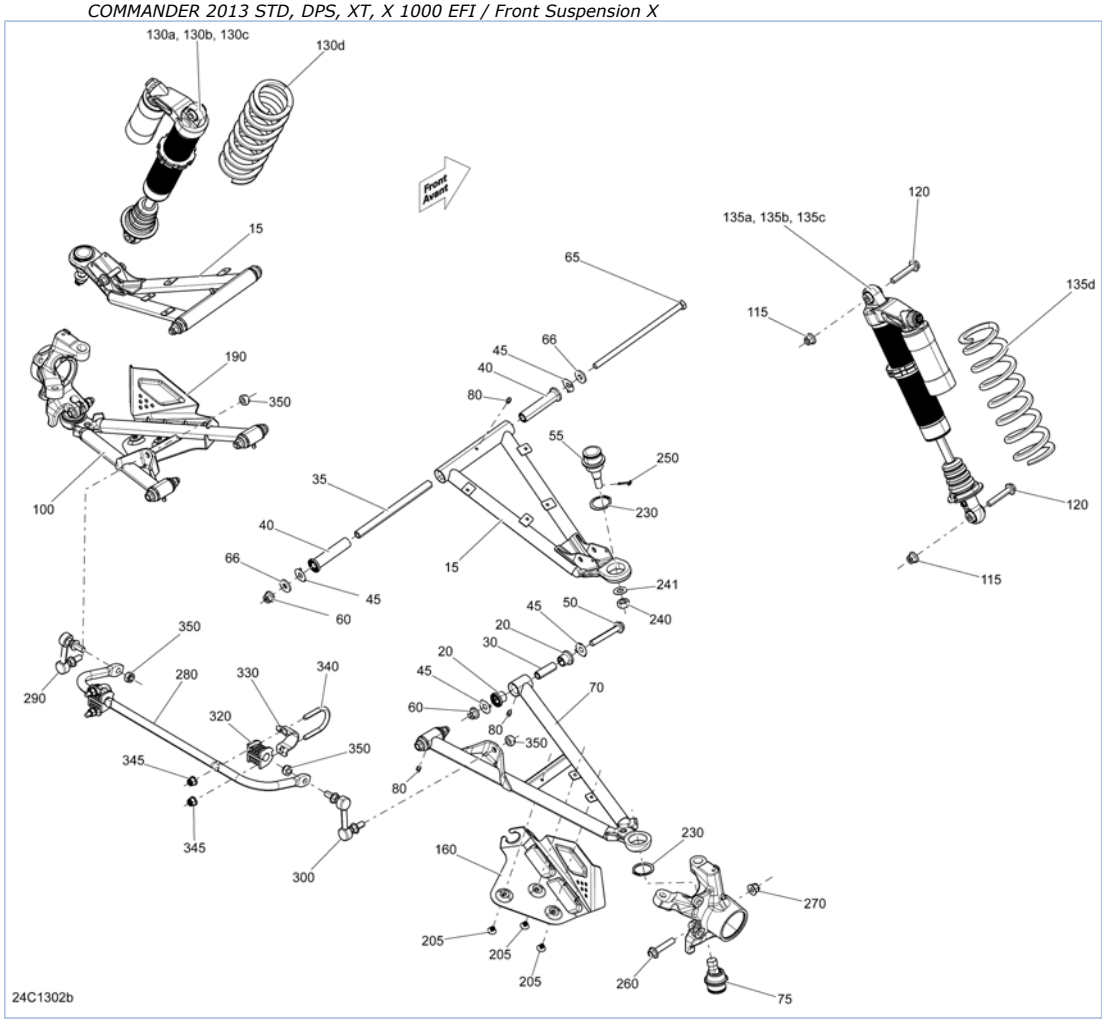

Part List

COMMANDER 2013 STD, DPS, XT, X 1000 EFI / Front Suspension X

ITEM	PART NUMBER	PART NAME	QUANTITY	REMARKS
15	706200796	Suspension Upper Arm	2	
20	706200181	Cushion	8	
30	706201587	INNER BUSHING	4	
35	706201061	INNER BUSHING	2	
40	706201062	Cushion	4	
45	706201063	Wear Plate	12	
50	207607046	HEX. FLANGED SCREW M10 X 70	4	
55	706201370	Upper Ball Joint	2	
60	233201416	Hex. Flanged Elastic Nut M10	6	
65	250000510	Hex. Cap Screw M10 X 225	2	
66	503190439	Washer	4	
70	706200744	RH Lower Suspension Arm	1	
75	706201371	Lower Ball Joint	2	
80	408200700	Grease Fitting	6	
100	706200742	LH Lower Suspension Arm	1	
115	233201416	Hex. Flanged Elastic Nut M10	4	
120	207605544	HEX. FLANGED SCREW M10 X 55	4	
130a	706201658	Front Shock Ass'y	2	Includes 130a to 130c
130b	715900209	O-Ring Bushing	8	
130c	715900210	INTERIOR BUSHING	8	
130d	706201617	Front Sping, Silver-Red	2	X Carbon/Black Model
130d	706201124	Front Spring, Green-Gold	2	X Black/Yellow Model
135a	706201658	Front Shock Ass'y	2	Includes 135a to 135c
135b	715900209	O-Ring Bushing	8	
135c	715900210	INTERIOR BUSHING	8	
135d	706201617	Front Sping, Silver-Red	2	X Carbon/Black Model
135d	706201124	Front Spring, Green-Gold	2	X Black/Yellow Model
160	706201670	RH Protector	1	
190	706201669	LH Protector	1	
205	293150104	Pop Rivet 3/16"	6	
230	293370035	Circlip	4	
240	250100099	Nut M12	2	
241	706200281	HARDENED WASHER	2	
250	211400017	Cotter Pin	2	
260	207605044	HEX. FLANGED SCREW M10 X 50	2	
270	233201414	Hex. Flanged Elastic Nut M10	2	
280	706200865	Sway Bar	1	
290	706200894	LH Double Ball Joint	1	
300	706201032	RH Double Ball Joint	1	
320	706201086	Stabilizer Bushing	2	
330	706201087	Clamp	2	
340	506060600	U-Clamp	2	
345	233281414	Hex. Flanged Elastic Nut M8	4	
350	232501416	Elastic Flanged Nut M10	4	

COMMANDER 2013 STD, DPS, XT, X 1000 EFI / Steering

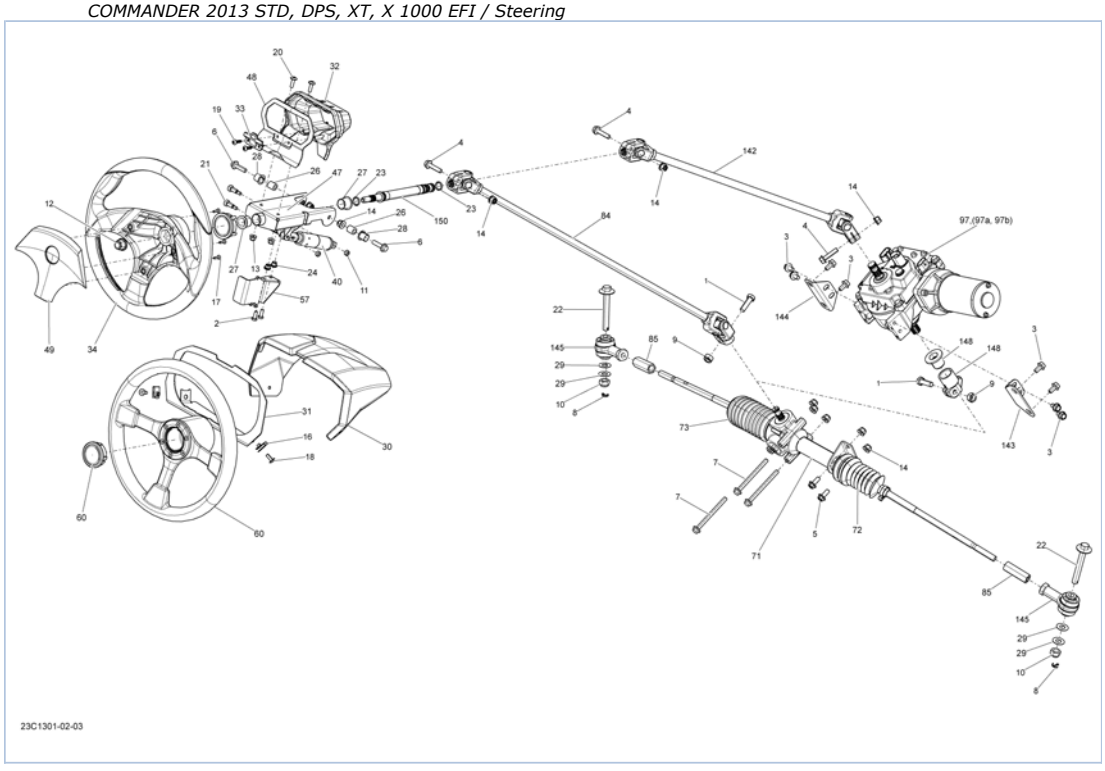

Part List

COMMANDER 2013 STD, DPS, XT, X 1000 EFI / Steering

ITEM	PART NUMBER	PART NAME	QUANTITY	REMARKS
1	207103586	Hex. Screw M10 X 35	1	
2	207361644	Hex. Screw M6 X 16, Scotch Grip	2	
3	207581644	Hex. Flanged Screw M8 X 16, Scotch Grip	8	
4	207583586	Hex. Flanged Screw M8 X 35, Scotch Grip	1	STD
4	207583586	Hex. Flanged Screw M8 X 35, Scotch Grip	2	X, XT, DPS
5	207682044	Hex. Flanged Screw M8 X 20	2	
6	207683044	Hex. Flanged Screw M8 X 30	2	
7	207689534	Hex. Flanged Scew M8 X 95	3	
8	211400017	Cotter Pin	2	
9	232500416	Elastic Stop Nut M10	1	
10	232521416	Elastic Flanged Stop Nut M12	2	
11	232561414	Elastic Stop Nut M6	2	
12	233221414	Hex. Flanged Elastic Nut M12	1	
13	233261414	Hex. Flanged Elastic Nut M6	2	
14	233281414	Hex. Flanged Elastic Nut M8	AR	
16	250000048	Pannel Nut M6 X 1.0	2	X, XT
17	250000084	Phillips Screw K40 X 16	3	STD, DPS
18	250000129	Torx Screw M6 X 16	2	X, XT
19	250000297	Truss Head Torx Screw K50 X 20	2	STD, DPS
20	250000350	Torx Truss Screw M6 X 20	2	
21	250000381	Socket Head Screw	2	
22	250000590	Hex. Cap Screw M12 X 88	2	
23	293300144	O-Ring	2	
24	293450274	Insert	2	Europe
26	293900106	Bushing	2	
27	415108000	Cushion	2	
28	705600799	Bushing	2	
29	706200281	HARDENED WASHER	4	
30	707900124	Upper Cluster Cover	1	X, XT
31	707900013	Cluster Support	1	X, XT
32	709400514	Speedometer Cover	1	STD, DPS
33	709400573	Latch Indicator Cover	1	STD, DPS
34	709400650	Steering Wheel	1	STD, DPS
40	709400656	Adjustment Cylinder	1	
47	709400655	Steering Support	1	
48	709400760	Cluster Support	1	STD, DPS
49	709400780	Steering Center	1	STD, DPS
57	709400810	Flasher Arm Support	1	Europe
60	715001134	Steering Wheel Kit	1	X, XT
71	709401195	Rack and Pinion Steering Ass'y	1	
72	715900078	RH Boot Kit	1	
73	715900077	LH Boot Kit	1	
84	709400900	Steering Column	1	STD
85	715900150	Nut Tie Rod End	2	
97	709401068	Power Steering Ass'y	1	X, XT, DPS
142	709401070	Steering Shaft Ass'y	1	X, XT, DPS
143	709401128	RH DPS Support	1	X, XT, DPS
144	709401129	LH DPS Support	1	X, XT, DPS
145	709401134	Ball Joint	2	
148	709401138	Coupling Ass'y	1	X, XT, DPS

150	709401167	Steering Shaft	1	
97a	709401115	DPS Calibrated Module	1	X, XT, DPS
97b	709401215	DPS Module Software	1	X, XT, DPS

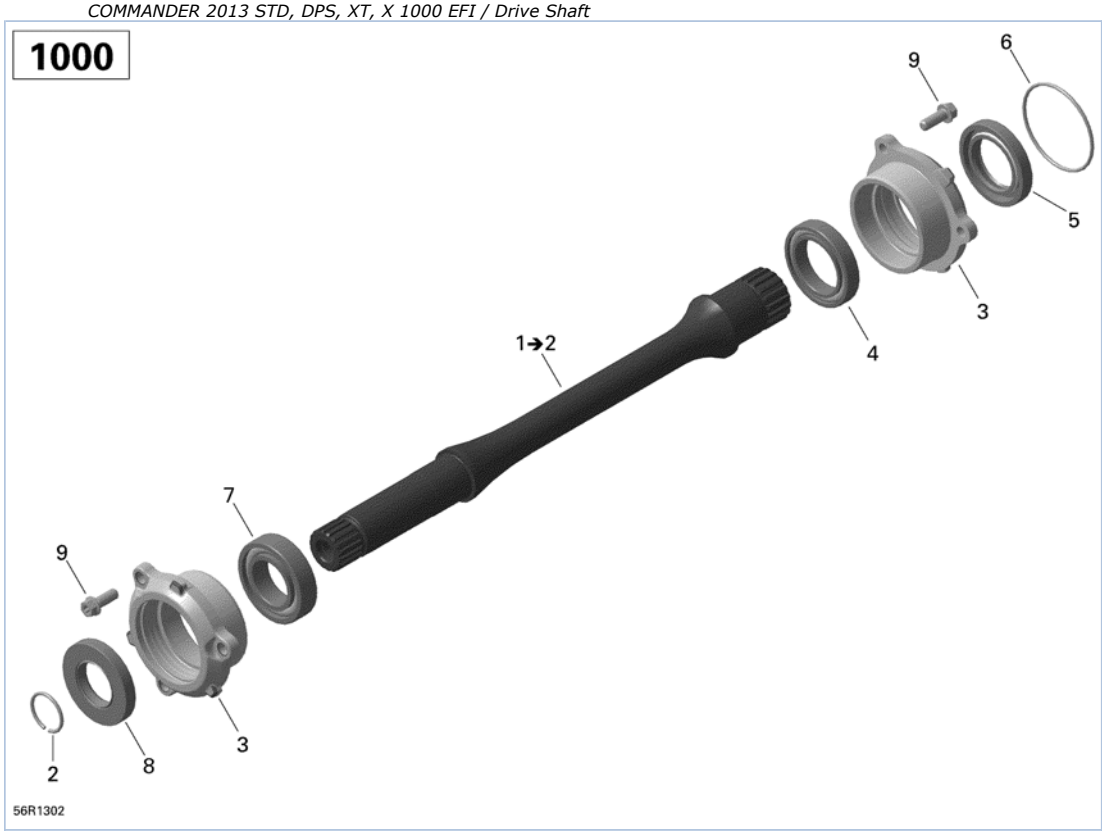
1000
9
6
5
3
4
1➔2
7
9
3
8
2
56R1302

Part List

COMMANDER 2013 STD, DPS, XT, X 1000 EFI / Drive Shaft

ITEM	PART NUMBER	PART NAME	QUANTITY	REMARKS
1	420620517	DRIVE SHAFT ASS'Y	1	Includes 1 to 2
2	420245010	Circlip	1	
3	420611221	BEARING COVER	2	
4	420632275	Ball Bearing	1	
5	420850055	Oil Seal	1	
6	420230305	O-Ring	1	
7	420232341	Ball Bearing	1	
8	420430589	Oil Seal	1	
9	420641048	Flanged Torx Screw M6 X 16	6	

COMMANDER 2013 STD, DPS, XT, X 1000 EFI / Drive System, Rear

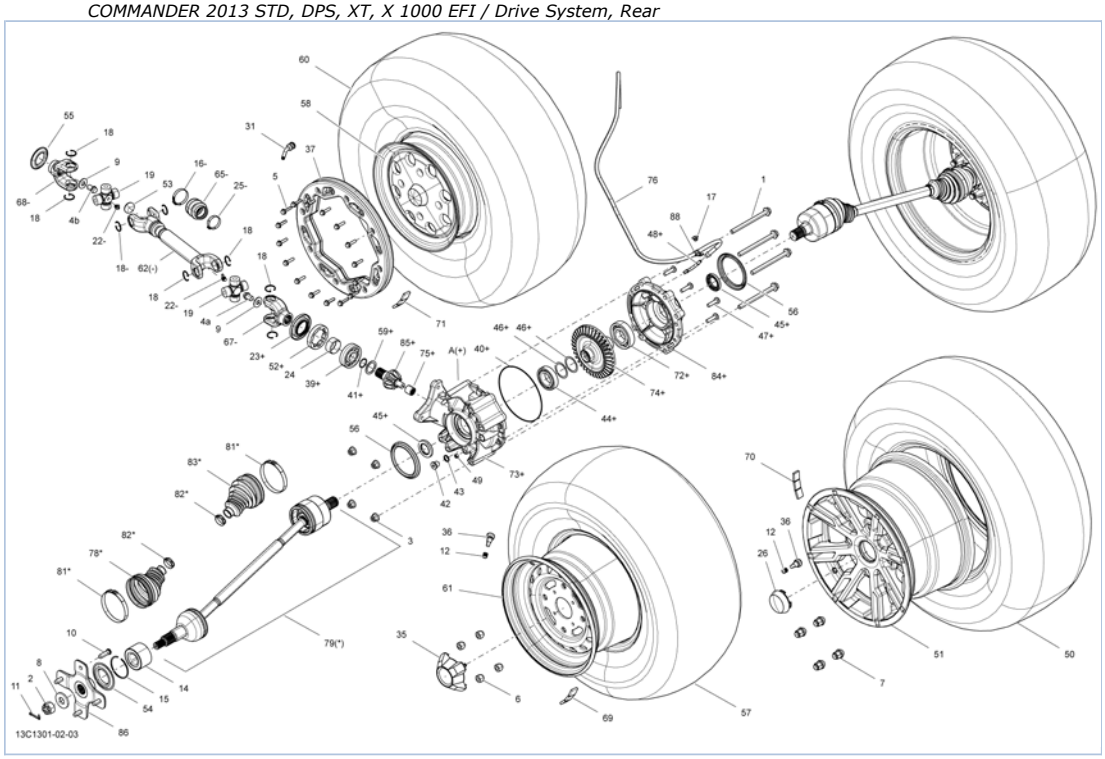

Part List

COMMANDER 2013 STD, DPS, XT, X 1000 EFI / Drive System, Rear

ITEM	PART NUMBER	PART NAME	QUANTITY	REMARKS
1	230602546	Hex. Flanged Screw M10 X 125	4	
2	250100047	HEX. CASTELLATED NUT M18	2	
3	233201416	Hex. Flanged Elastic Nut M10	4	
5	250000435	Hex. Flanged Screw M6 X 25	16	X Model
6	250100042	Wheel Nut	8	
7	250100082	Chrome Wheel Nut M10 X 1.25	8	XT, DPS Model
7	250100100	Black Wheel Nut M10 X 1.26	8	X, XT CAMO Model
8	250200049	Spring Washer	2	
9	250200102	Flat Washer	2	
10	250300045	WHEEL STUD	4	
11	250400036	Cotter Pin	2	
12	293000110	Valve Cap	2	
12	293000111	Valve Cap	2	X Model
14	293350040	CONE BEARING	2	
15	293370019	Circlip	2	
16	293650138	Oetiker Clamp	2	
17	390402200	Pop Rivet 3/16"	1	
18	715900102	Snap Ring	8	
19	715900186	U-Joint	2	
22	715900184	Nipple	2	
23	705400027	Oil Seal	1	
24	705400036	Wear Ring	1	
25	509000045	Gear Clamp	1	
26	705400504	Wheel Cap	2	XT CAMO Model
26	705400520	Wheel Cap	2	XT, DPS Model
31	705400872	Rim Valve with Cap	1	
35	705400921	Wheel Cap	2	
36	705400193	Rim Valve with Cap	1	
37	705401248	Reinforcement Disc Plate	1	X Model, Yellow
37	705401247	Reinforcement Disc Plate	1	X Model, Black
39	705500260	Ball Bearing	1	
40	705500265	Seal	1	
41	705500267	O-Ring	1	
42	705500504	FILL LEVEL PLUG	1	
43	705500506	Copper Washer	1	
44	705500749	Ball Bearing	1	
45	705501196	Oil Seal	2	
45	705501196	Oil Seal	2	
46	703500548	DIFFERENTIAL SHIM KIT	1	
46	703500049	Pinion Shim Kit	1	
47	705500892	Screw	4	
48	705500893	Vent Valve	1	
49	705500894	Drain Plug	1	
50	705500964	REAR TIRE	1	XT, DPS Model
50	705501295	REAR TIRE	1	XT Europe
51	705500965	REAR RIM	1	XT, DPS Model
51	705501261	REAR RIM	1	XT CAMO Model
52	705500987	Nut	1	
53	715900187	Cover	1	
54	705501121	WEAR SLEEVE	1	
55	705501123	Protector	1	
56	705501124	Wear Ring	2	

57	705501129	REAR TIRE	1	STD Model
57	705501434	REAR TIRE	1	STD Model, Europe
58	705501137	REAR RIM	1	X Model
59	705501162	PINION GEAR SHIM	1	
59	705500075	Pinion Gear Shim .022"	1	
60	705501186	REAR TIRE	1	X Model
60	705501494	REAR TIRE	1	X Model, Europe
61	705501623	Rear Rim, Black	1	
62	705501257	Drive Axle Ass'y	1	
65	715900118	RUBBER BOOT	1	
67	715900101	Fixe Yoke	1	
68	705501373	Fixed Joint	1	
69	705501385	1/2 OZ Weight	AR	
69	705501385	1/2 OZ Weight	AR	
70	705501385	1/2 OZ Weight	AR	
71	705501385	1/2 OZ Weight	AR	
72	705501389	Ball Bearing	1	
73	705501395	PINION REAR COVER	1	
74	705501397	Gear, 36 Tooth	1	
75	705501408	Needle Bearing	1	
76	415080200	Hose, Polyurethane	AR	
78	XXX	BOOT KIT	2	
79	705501481	Half Shaft	2	
81	XXX	Oetiker Clamp (27,5mm)	1	
82	XXX	Oetiker Clamp (81mm)	1	
83	XXX	BOOT KIT	2	
84	705501507	Rear Differential Cover	1	
85	705501571	Pinion 10 Tooth	1	
86	705501713	WHEEL HUB ASS'Y	1	
88	705600459	Clamp	1	
4a	250000378	Hex Flanged Screw S.Grip M12 X 16	1	
4b	250000359	Hex Flanged Screw M12 x 16	1	
A	705501506	Differential Ass'y	1	

COMMANDER 2013 STD, DPS, XT, X 1000 EFI / Rear Suspension

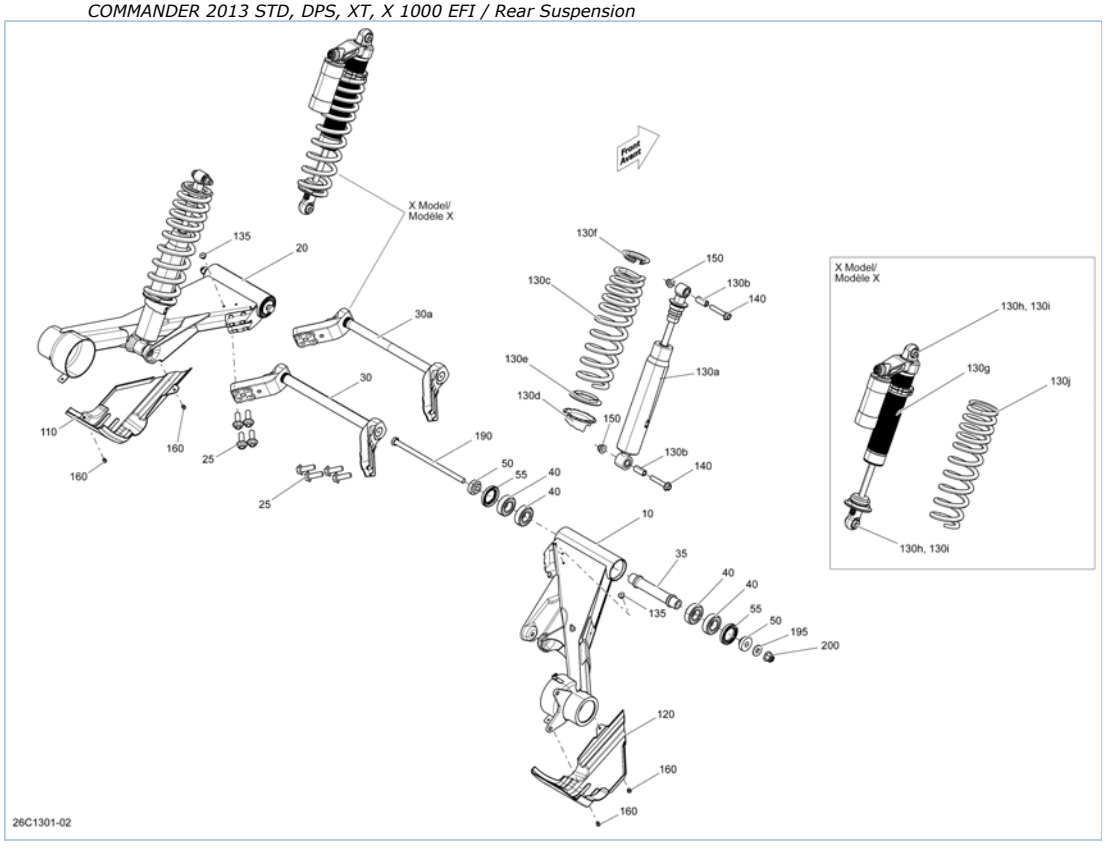

Part List

COMMANDER 2013 STD, DPS, XT, X 1000 EFI / Rear Suspension

ITEM	PART NUMBER	PART NAME	QUANTITY	REMARKS
10	706001318	RH Swing Arm	1	
20	706001319	LH Swing Arm	1	
25	207523544	Hex. Flanged Screw M12 X 35, Scotch Grip	8	
30	706001322	Sway Bar	1	Except X Model
30a	706001321	Sway Bar	1	X Model
35	706000616	Pivot Bushing	2	
40	293350055	Ball Bearing	8	
50	706000629	Spacer	4	
55	293200094	Seal	4	
110	706000630	LH Joint Protector	1	
120	706000814	RH Joint Protector	1	
130a	706000615	Rear Shock Ass'y	2	STD, XT and DPS Model, Inclus 130a to 130b
130b	715900122	Bushing	4	STD, XT and DPS Model
130c	706001043	Rear Spring, Blue-Yellow	2	STD Model
130c	706000667	Rear Spring, Blue-Gold	2	XT Yellow Model
130c	706001045	Rear Spring, Green-Yellow	2	XT Magnesium Model
130c	706001045	Rear Spring, Green-Yellow	2	XT Camo Model
130c	706001043	Rear Spring, Blue-Yellow	2	XT Red Model
130c	706000667	Rear Spring, Blue-Gold	2	DPS Model
130d	706000910	Adjustable Ring	2	STD, XT and DPS Model
130e	706000911	Protector Ring	2	STD, XT and DPS Model
130f	706000567	Spring Stopper	2	STD, XT and DPS Model
130g	706001360	Rear Shock Ass'y	2	Inclus 130g to 130i, X Model
130h	715900209	O-Ring Bushing	8	X Model
130i	715900210	INTERIOR BUSHING	8	X Model
130j	706000821	Rear Spring, Gold-Gold	2	X Black/Yellow Model
130j	706001317	Rear Spring, Silver-Blue	2	X Carbon/Black Model
135	390406500	Pop Rivet 3/16"	2	
140	207605544	HEX. FLANGED SCREW M10 X 55	4	
150	233201416	Hex. Flanged Elastic Nut M10	4	
160	293150104	Pop Rivet 3/16"	4	
190	250000515	Hex. Cap Screw M12 X 241	2	
195	250200120	Flat Washer M12	2	
200	233221416	Elastic Flange Nut M12	2	

COMMANDER 2013 STD, DPS, XT, X 1000 EFI / Body And Accessories

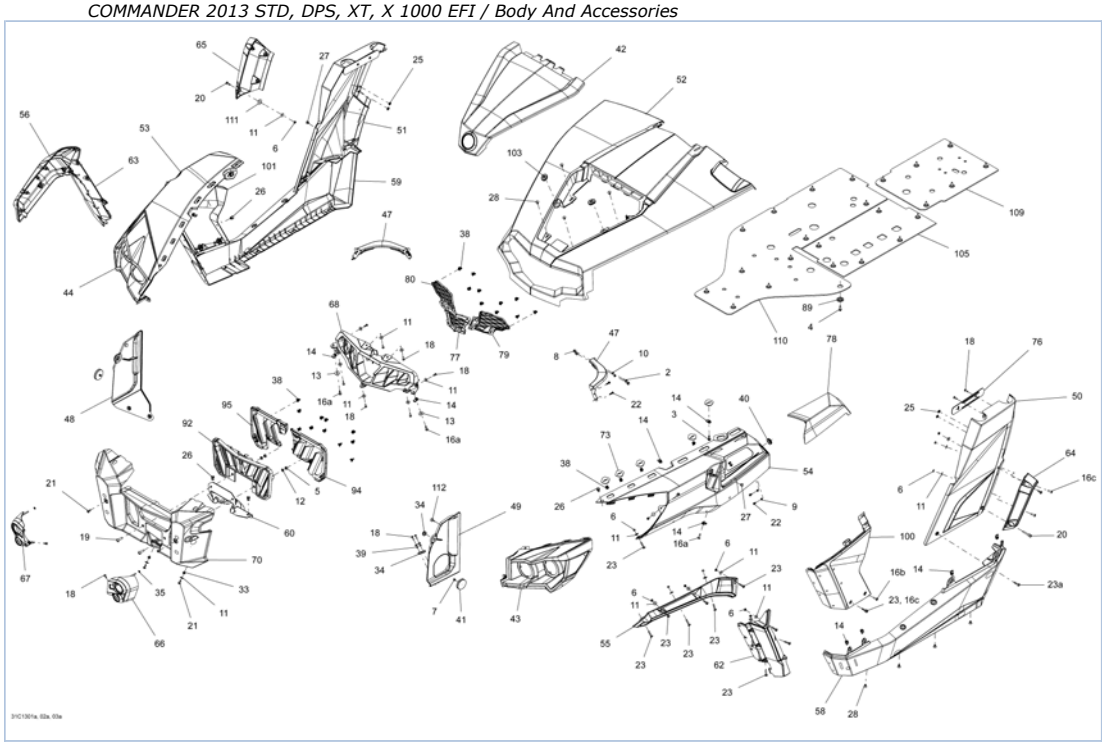

Part List

COMMANDER 2013 STD, DPS, XT, X 1000 EFI / Body And Accessories

ITEM	PART NUMBER	PART NAME	QUANTITY	REMARKS
2	207661644	Hex. Flanged Screw M6 X 16	4	
3	207662044	Hex. Flanged Screw M6 X 20	2	
4	210262080	Hex. Forming Screw M6 X 20	24	
5	232081414	Hex. Nut M8	2	STD, DPS, X
6	232561434	Elastic Stop Nut M6	AR	
7	233251414	Hex. Flanged Elastic Nut M5	2	Except Europe
8	233261414	Hex. Flanged Elastic Nut M6	4	
9	234051410	Flat Washer M5	4	
10	234061600	Flat Washer M6, Stainless	4	
11	234062670	Flat Washer	AR	
12	234081410	Flat Washer 8 mm	2	STD, DPS, X
13	234082410	Flat Washer 8 mm	2	
14	250000048	Pannel Nut M6 X 1.0	AR	
16a	250000128	Torx Truss Screw M6 X 20	2	
16b	250000350	Torx Truss Screw M6 X 20	2	
16c	250000488	Torx Truss Screw M6 X 20	AR	XT Except Europe
16c	250000488	Torx Truss Screw M6 X 20	AR	Black Carbon Fiber
18	250000146	Truss Head Torx Screw K50 X 16	AR	
19	250000197	Torx Truss Screw M8 X 30	2	STD, DPS, X
20	250000215	Torx Screw M6 X 45	AR	
21	250000261	Torx Screw M6 X 16	4	
22	250000297	Truss Head Torx Screw K50 X 20	AR	
23	250000371	Torx Screw M6 X 30 Stainless	AR	
23a	250000398	Stainless Torx Screw,Nylon Patch,M6 X 30	AR	
25	250100129	Push Nut	AR	
26	293150089	Tuflok Plastic Rivet	AR	
27	293150104	Pop Rivet 3/16"	2	
28	293150104	Pop Rivet 3/16"	AR	
33	293450274	Insert	2	
34	293720053	Grommet	6	
35	389804300	Push Nut	2	Europe
38	517302785	Clip	AR	
39	517303439	Knob	4	
40	517303756	Grommet	1	
41	705002409	Reflector, Amber	2	Except Europe
42	705002881	Removable Hood, Yellow	1	Yellow
42	705004384	Removable Hood, Red	1	Red
42	705004385	Removable Hood, Camo	1	CAMO
42	705004386	Removable Hood, Black	1	X Black
42	705005291	Removable Hood, Magnesium	1	Magnesium
42	705006057	Removable Hood, White	1	White
42	705006058	Removable Hood, Graphite	1	Black Carbon Fiber
43	705002885	LH Front Facia	1	
44	705002886	RH Front Facia	1	
47	705002891	Facia Front Support	2	
48	705002895	LH Deflector	1	STD, DPS, X
48	705005113	LH Deflector	1	XT
49	705002894	RH Deflector	1	
50	705002904	LH Rear Lateral Pannel, Yellow	1	DPS
50	705003850	LH Rear Lateral Pannel, Red	1	XT Red
50	705002904	LH Rear Lateral Pannel,	1	XT Yellow

		Yellow		
50	705004396	LH Rear Lateral Pannel, Camo	1	CAMO
50	705004398	LH Rear Lateral Pannel, Black	1	X Black
50	705005297	LH Rear Lateral Pannel, Magnesium	1	Magnesium
50	705006064	LH Rear Lateral Pannel, White	1	White
50	705006066	LH Rear Lateral Pannel, Red	1	STD
50	705006068	LH Rear Lateral Pannel, Graphite	1	Black Carbon Fiber
50	705002904	LH Rear Lateral Pannel, Yellow	1	XT Yellow
51	705002905	RH Rear Lateral Pannel, Yellow	1	DPS
51	705003851	RH Rear Lateral Pannel, Red	1	XT Red
51	705002905	RH Rear Lateral Pannel, Yellow	1	XT Yellow
51	705004395	RH Rear Lateral Pannel, Camo	1	CAMO
51	705004397	RH Rear Lateral Pannel, Black	1	X Black
51	705005299	RH Rear Lateral Pannel, Magnesium	1	Magnesium
51	705006065	RH Rear Lateral Pannel, White	1	White
51	705006067	RH Rear Lateral Pannel, Red	1	STD
51	705006069	RH Rear Lateral Pannel, Graphite	1	Black Carbon Fiber
51	705002905	RH Rear Lateral Pannel, Yellow	1	XT Yellow
52	705002915	Fixed Hood, Yellow	1	X Black
52	705002915	Fixed Hood, Yellow	1	Yellow
52	705004379	Fixed Hood, Red	1	Red
52	705004380	Fixed Hood, Camo	1	CAMO
52	705005289	Fixed Hood, Magnesium	1	Magnesium
52	705006036	Fixed Hood, White	1	White
52	705006056	Fixed Hood, Metallic Black	1	Black Carbon Fiber
53	705003029	RH Front Fender, Yellow	1	DPS
53	705003827	RH Front Fender, Red	1	XT Red
53	705003029	RH Front Fender, Yellow	1	XT Yellow
53	705004375	RH Front Fender, Camo	1	CAMO
53	705004377	RH Front Fender, Black	1	X Black
53	705005285	RH Front Fender, Magnesium	1	Magnesium
53	705006051	RH Front Fender, Red	1	STD
53	705006052	RH Front Fender, White	1	White
53	705006053	RH Front Fender, Graphite	1	Black Carbon Fiber
53	705003029	RH Front Fender, Yellow	1	XT Yellow
54	705003030	LH Front Fender, Yellow	1	DPS
54	705003826	LH Front Fender, Red	1	XT Red
54	705003030	LH Front Fender, Yellow	1	XT Yellow
54	705004376	LH Front Fender, Camo	1	CAMO
54	705004378	LH Front Fender, Black	1	X Black
54	705005283	LH Front Fender, Magnesium	1	Magnesium
54	705006048	LH Front Fender, White	1	White
54	705006049	LH Front Fender, Graphite	1	Black Carbon Fiber
54	705006050	LH Front Fender, Red	1	STD
54	705003030	LH Front Fender, Yellow	1	XT Yellow
55	705003058	LH Upper Front Mudguards	1	XT Except Europe
55	705003058	LH Upper Front Mudguards	1	Black Carbon Fiber
55	705003058	LH Upper Front Mudguards	1	
56	705003059	RH Upper Front Mudguards	1	Black Carbon Fiber
56	705003059	RH Upper Front Mudguards	1	XT Except Europe

56	705003059	RH Upper Front Mudguards	1	
58	705004989	LH Middle Side Pannel	1	XT
58	705005946	LH Middle Side Pannel	1	
58	705004991	LH Middle Side Pannel	1	X
58	705005946	LH Middle Side Pannel	1	
58	705005946	LH Middle Side Pannel	1	STD, DPS
59	705004990	RH Middle Side Pannel	1	XT
59	705005947	RH Middle Side Pannel	1	
59	705004992	RH Middle Side Pannel	1	X
59	705005947	RH Middle Side Pannel	1	
59	705005947	RH Middle Side Pannel	1	STD, DPS
60	705003399	Bottom Deflector	1	STD, DPS, X
62	705003601	LH Lower Front Mudguards	1	Black Carbon Fiber
62	705003601	LH Lower Front Mudguards	1	XT Except Europe
62	705003602	RH Lower Front Mudguards	1	XT Except Europe
62	705003602	RH Lower Front Mudguards	1	Black Carbon Fiber
62	705003601	LH Lower Front Mudguards	1	
63	705003602	RH Lower Front Mudguards	1	
64	705003605	LH Lower Rear Mudguards	1	XT Except Europe
64	705003605	LH Lower Rear Mudguards	1	Black Carbon Fiber
64	705003605	LH Lower Rear Mudguards	1	
65	705003606	RH Lower Rear Mudguards	1	XT Except Europe
65	705003606	RH Lower Rear Mudguards	1	Black Carbon Fiber
65	705003606	RH Lower Rear Mudguards	1	
66	705003627	LH Flasher Cap	1	Europe
67	705003628	RH Flasher Cap	1	Europe
68	705003629	Upper Facia, Black	1	
70	705003306	FRONT FACIA	1	
73	705003841	Support Plate	12	
76	705004261	Support Plate	2	
77	705004336	Center Upper Facia Protector	1	
78	705004337	CVT Inlet Cover, Yellow	1	Yellow
78	705004381	CVT Inlet Cover, Red	1	Red
78	705004382	CVT Inlet Cover, Camo	1	CAMO
78	705004383	CVT Inlet Cover, Black	1	X Black
78	705005287	CVT Inlet Cover, Magnesium	1	Magnesium
78	705006054	CVT Inlet Cover, White	1	White
78	705006055	CVT Inlet Cover, Graphite	1	Black Carbon Fiber
79	705004350	LH Upper Facia Protector	1	
80	705004351	RH Upper Facia Protector	1	
89	705004510	Cup	24	
91	N/A	Not available for this vehicle	-	
92	705004755	Lower Front Facia Protector	1	
94	705004819	LH Lower Rear Facia Protector	1	
95	705004820	RH Lower Rear Facia Protector	1	
100	705002887	LH Front Lateral Pannel, Yellow	1	DPS
100	705004996	LH Front Lateral Pannel, Red	1	XT Red
100	705002887	LH Front Lateral Pannel, Yellow	1	XT Yellow
100	705005559	LH Front Lateral Pannel, Red	1	STD
100	705005561	LH Front Lateral Pannel, Black	1	X Black
100	705006037	LH Front Lateral Pannel, White	1	White
100	705006060	LH Front Lateral Pannel, Graphite	1	Black Carbon Fiber
100	705006378	LH Front Lateral Pannel, Camo	1	CAMO
100	705006382	LH Front Lateral Pannel,	1	Magnesium

		Magnesium		
100	705002887	LH Front Lateral Pannel, Yellow	1	XT Yellow
101	705002888	RH Front Lateral Pannel, Yellow	1	DPS
101	705004997	RH Front Lateral Pannel, Red	1	XT Red
101	705002888	RH Front Lateral Pannel, Yellow	1	XT Yellow
101	705005558	RH Front Lateral Pannel, Red	1	STD
101	705005560	RH Front Lateral Pannel, Black	1	X Black
101	705006059	RH Front Lateral Pannel, White	1	White
101	705006063	RH Front Lateral Pannel, Graphite	1	Black Carbon Fiber
101	705006379	RH Front Lateral Pannel, Camo	1	CAMO
101	705006383	RH Front Lateral Pannel, Magnesium	1	Magnesium
101	705002888	RH Front Lateral Pannel, Yellow	1	XT Yellow
103	705005156	Oval Washer	2	
105	705006075	RH Protector Plate	1	
109	705006074	Rear Protector Plate	1	
110	705005415	LH Protector Plate	1	
111	706200281	HARDENED WASHER	1	Black Carbon Fiber
111	706200281	HARDENED WASHER	1	XT Except Europe
111	706200281	HARDENED WASHER	1	
112	708000759	Rubber Stopper	2	

COMMANDER 2013 STD, DPS, XT, X 1000 EFI / Body And Accessories Kit

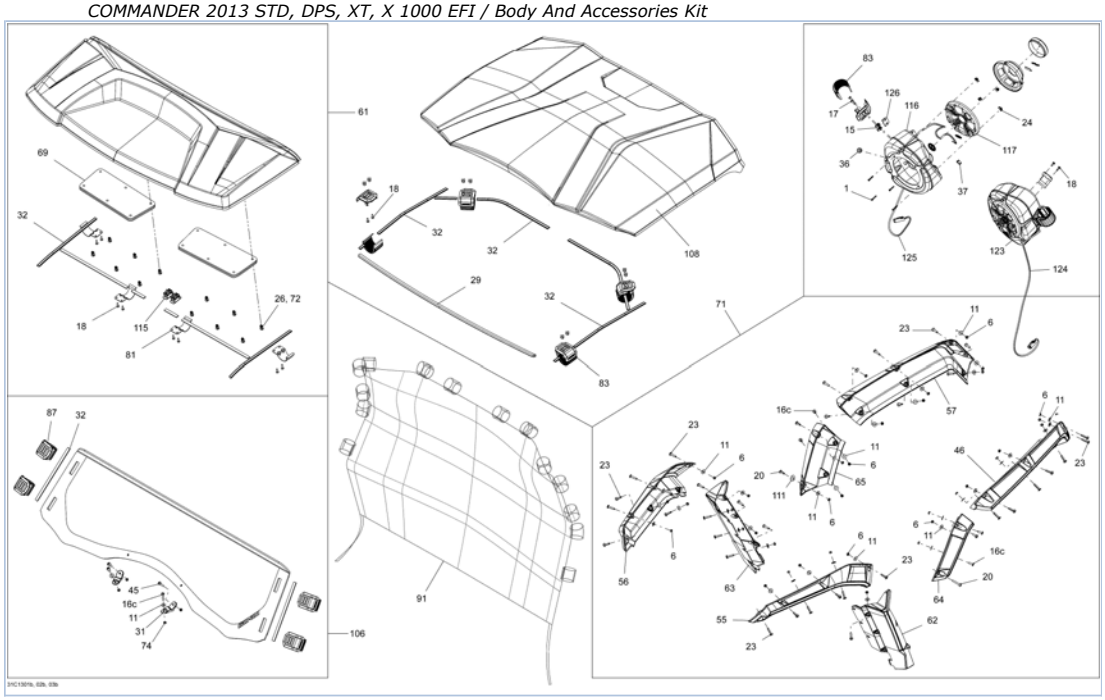

Part List

COMMANDER 2013 STD, DPS, XT, X 1000 EFI / Body And Accessories Kit

ITEM	PART NUMBER	PART NAME	QUANTITY	REMARKS
1	N/A	Not available for this vehicle	-	
6	232561434	Elastic Stop Nut M6	AR	XT
11	234062670	Flat Washer	AR	XT
15	N/A	Not available for this vehicle	-	
16c	250000488	Torx Truss Screw M6 X 20	7	XT
17	N/A	Not available for this vehicle	-	
18	N/A	Not available for this vehicle	-	
20	250000215	Torx Screw M6 X 45	AR	XT
23	250000371	Torx Screw M6 X 30 Stainless	AR	XT
24	N/A	Not available for this vehicle	-	
26	N/A	Not available for this vehicle	-	
29	N/A	Not available for this vehicle	-	
31	N/A	Not available for this vehicle	-	
32	N/A	Not available for this vehicle	-	
36	N/A	Not available for this vehicle	-	
37	N/A	Not available for this vehicle	-	
45	N/A	Not available for this vehicle	-	
46	705003603	LH Upper Rear Mudguards	1	XT
55	705003058	LH Upper Front Mudguards	1	XT
56	705003059	RH Upper Front Mudguards	1	XT
57	705003604	RH Upper Rear Mudguards	1	XT
61	N/A	Not available for this vehicle	-	
62	705003601	LH Lower Front Mudguards	1	XT
63	705003602	RH Lower Front Mudguards	1	XT
64	705003605	LH Lower Rear Mudguards	1	XT
65	705003606	RH Lower Rear Mudguards	1	XT
69	N/A	Not available for this vehicle	-	
71	715001013	Fender Extension Kit	1	XT
72	N/A	Not available for this vehicle	-	
74	N/A	Not available for this vehicle	-	
81	N/A	Not available for this vehicle	-	
83	N/A	Not available for this vehicle	-	
87	N/A	Not available for this vehicle	-	
91	N/A	Not available for this vehicle	-	
106	N/A	Not available for this vehicle	-	
108	N/A	Not available for this vehicle	-	
111	706200281	HARDENED WASHER	1	XT
115	N/A	Not available for this vehicle	-	
116	N/A	Not available for this vehicle	-	
117	N/A	Not available for this vehicle	-	
123	N/A	Not available for this vehicle	-	
124	N/A	Not available for this vehicle	-	
125	N/A	Not available for this vehicle	-	
126	N/A	Not available for this vehicle	-	

COMMANDER 2013 STD, DPS, XT, X 1000 EFI / Cab Interior

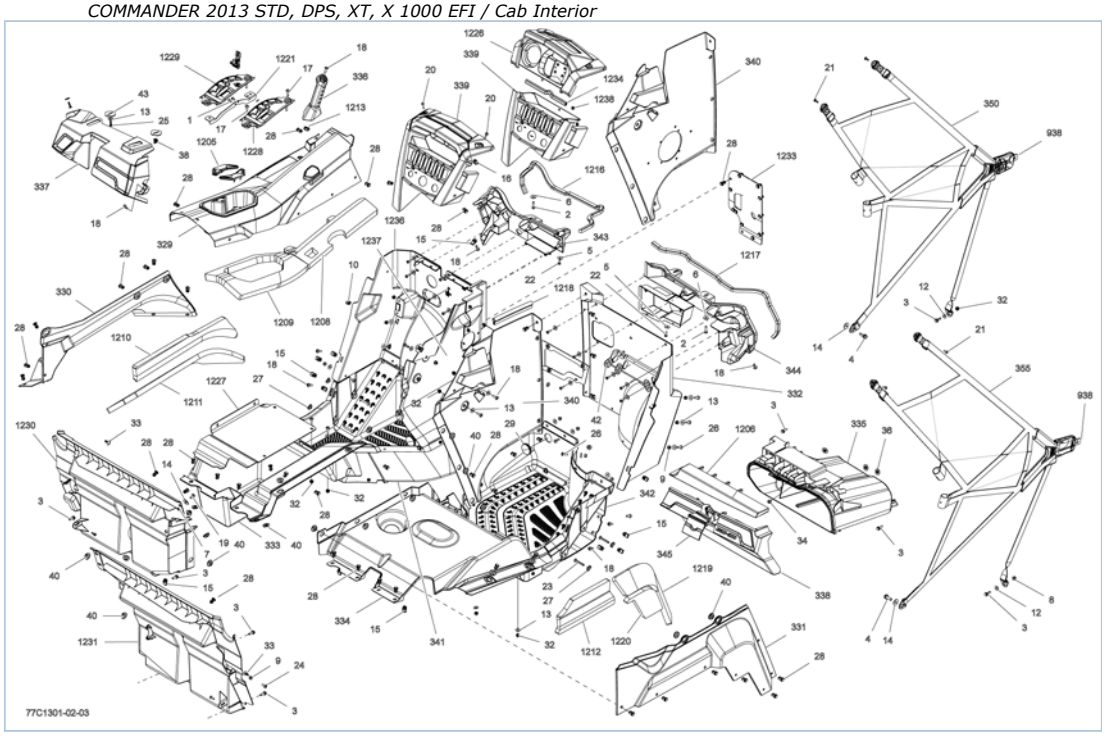

Part List

COMMANDER 2013 STD, DPS, XT, X 1000 EFI / Cab Interior

ITEM	PART NUMBER	PART NAME	QUANTITY	REMARKS
1	205951046	SOCKET HEAD SCREW M5 X 10	2	
2	207162544	Hex. Screw M6 X 25	2	
3	207662034	Hex. Flanged Screw	6	
4	207682544	Hex. Flanged Screw M8 X 25	2	
5	224060201	Flat Washer	1	
6	224061201	Flat Washer	2	
7	232061600	Hex. Nut M6	2	
8	233261414	Hex. Flanged Elastic Nut M6	1	
9	233261494	Hex. Elastic Flanged Nut M6	10	
10	233281414	Hex. Flanged Elastic Nut M8	2	
12	234062410	Flat Washer 6 mm	2	
13	234062670	Flat Washer	6	
14	234082410	Flat Washer 8 mm	4	
15	250000048	Pannel Nut M6 X 1.0	2	
16	250000079	Panel Nut M5 X 0.8	2	
17	250000081	Torx Screw M6 X 25	2	
18	250000128	Torx Truss Screw M6 X 20	1	
19	250000129	Torx Screw M6 X 16	2	
20	250000130	Torx Screw M5 X 20	2	
21	250000145	Torx Screw M5 X 14	4	
22	250000146	Truss Head Torx Screw K50 X 16	1	
23	250000215	Torx Screw M6 X 45	2	
24	250000261	Torx Screw M6 X 16	1	
25	250000297	Truss Head Torx Screw K50 X 20	2	
26	250000335	Socket Head Screw M6 X 20	9	
27	293100003	Nut M6	2	
28	293150089	Tuflok Plastic Rivet	2	
29	293250242	Rubber Cover	1	
32	293450274	Insert	10	
33	293730011	Dart, Black	1	
34	293830005	Rubber Plug	1	
36	414859400	Cap	3	
38	517302785	Clip	1	
40	705003264	Grommet	3	
42	705003668	Oblong Grommet	4	
43	705003841	Support Plate	2	
329	715001247	Central Console Ass'y	1	
329	715001249	Central Console Ass'y	1	Europe
330	707900001	LH Side Console	1	
331	707900002	RH Side Console	1	
332	707900004	RH Front Floor	1	
333	715001264	LH Under Cover Ass'y	1	
334	707900006	RH Under Cover Ass'y	1	
335	707900046	Storage Bin	1	XT, LTD Model
335	707900009	Storage Bin	1	STD, DPS, X model
336	707900011	Passenger Handle	1	
337	715001250	Dashboard Ass'y	1	
338	715001263	Bin Cover Ass'y	1	
339	715001265	Central Dashboard Ass'y	1	
339	715900108	Central Dashboard Ass'y	1	Europe
340	707900021	RH Fixe Side Console	1	
341	707900022	LH Lower Floor	1	
342	707900023	RH Lower Floor	1	

343	707900029	LH Floor Support	1	
344	707900030	RH Floor Support	1	
345	707900031	Latch	1	
350	707900127	LH Lateral Net	1	
355	707900128	RH Lateral Net	1	
938	707900035	Buckle	1	
1205	707900036	Cup Retainer	2	
1206	707900062	Trim Glove Box	1	
1208	707900041	Front Central Console Foam	1	
1209	707900042	Rear Central Console Foam	1	
1210	707900043	LH Upper Lateral Console Foam	1	
1211	707900044	LH Lower Lateral Console Foam	1	
1212	707900045	RH Lateral Console Foam	1	
1213	707900048	CONNECTOR TUBE	1	
1216	293200093	Neoprene Seal	AR	
1217	293200093	Neoprene Seal	AR	
1218	293250240	Neoprene Seal	AR	
1219	707900055	RH Lateral Console Foam	1	
1220	707900056	RH Lateral Console Foam	1	
1221	707900058	LOCK SUPPORT	1	Europe
1226	N/A	Not available for this vehicle	1	
1227	N/A	Not available for this vehicle	1	
1228	707900070	LEVER INDICATOR	1	
1228	707900071	LEVER INDICATOR	1	Europe
1229	707900070	LEVER INDICATOR	1	
1229	707900071	LEVER INDICATOR	1	Europe
1230	707900092	LH Rear Deflector	1	
1231	707900094	RH Rear Deflector	1	
1233	707900108	Deflector	1	STD Model
1233	707900125	Deflector	1	
1234	N/A	Not available for this vehicle	1	LTD
1236	707900134	LH Front Floor	1	
1237	707900136	LH Lateral Console	1	
1237	N/A	Not available for this vehicle	1	LTD
1238	N/A	Not available for this vehicle	3	LTD

COMMANDER 2013 STD, DPS, XT, X 1000 EFI / Decals

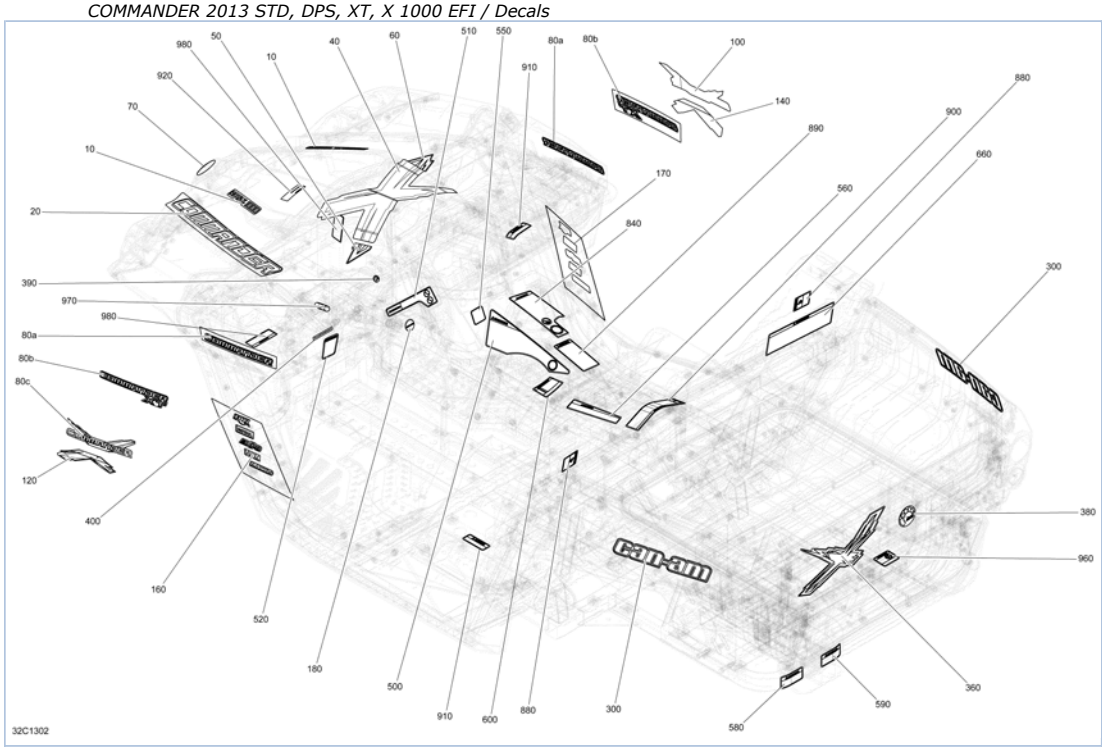

Part List

COMMANDER 2013 STD, DPS, XT, X 1000 EFI / Decals

ITEM	PART NUMBER	PART NAME	QUANTITY	REMARKS
10	704902849	Hood Decal, Rotax 1000	2	Yellow Model
10	704902851	Hood Decal, Rotax 1000	2	Camo Model
10	704902852	Hood Decal, Rotax 1000	2	Red Model
10	704902853	Hood Decal, Rotax 1000	2	Magnesium Model
10	704903025	Hood Decal, Rotax 1000	2	X Black/Yellow Model
10	704903026	Hood Decal, Rotax 1000	2	X Carbon/Black Model
20	704903017	Hood Lateral Decal, Commander	1	X Black/Yellow Model
20	704903018	Hood Lateral Decal, Commander	1	X Carbon/Black Model
40	704903014	Decal, X	1	X Black/Yellow Model
40	704903015	Decal, X	1	X Carbon/Black Model
50	704903019	Decal, X Point RH	1	X Black/Yellow Model
50	704903020	Decal, X Point LH	1	X Carbon/Black Model
60	704903021	Decal, X Point LH	1	X Black/Yellow Model
60	704903022	Decal, X Point RH	1	X Carbon/Black Model
70	219902469	Logo BRP, 68 mm	1	
80a	704902999	Lateral Decal, Commander	2	STD
80a	704902310	Lateral Decal, Commander	2	DPS Model
80b	704902311	Lateral Decal, Commander XT	2	XT Yellow Model
80b	704902312	Lateral Decal, Commander XT	2	XT Red Model
80b	704903510	Lateral Decal, Commander XT	2	XT Camo Model
80b	704902716	Lateral Decal, Commander XT	2	XT Magnesium Model
80c	704903006	LH Upper Side Decal	1	X Black/Yellow Model
80c	704903007	LH Upper Side Decal	1	X Carbon/Black Model
100	704903008	RH Upper Side Decal	1	X Black/Yellow Model
100	704903009	RH Upper Side Decal	1	X Carbon/Black Model
120	704903010	LH Lower Side Decal	1	X Black/Yellow Model
120	704903011	LH Lower Side Decal	1	X Carbon/Black Model
140	704903012	RH Lower Side Decal	1	X Black/Yellow Model
140	704903013	RH Lower Side Decal	1	X Carbon/Black Model
160	704903023	LH Sponsor Decal	1	X Carbon/Black Model
160	704903028	LH Sponsor Decal	1	X Black/Yellow Model
170	704903024	RH Sponsor Decal	1	X Carbon/Black Model
170	704903029	RH Sponsor Decal	1	X Black/Yellow Model
180	704902065	Logo Can-Am, 35 mm	1	
300	704902320	Decal, Can-Am	2	Yellow Model
300	704902321	Decal, Can-Am	2	Red Model
300	704902361	Decal, Can-Am	2	X Black/Yellow Model
300	704902508	Decal, Can-Am	2	Camo Model
300	704902717	Decal, Can-Am	2	Magnesium Model
300	704903000	Decal, Can-Am	2	X Carbon/Black Model
360	704902998	Decal, X	1	X Carbon/Black Model
360	704903016	Decal, X	1	X Black/Yellow Model
380	219902469	Logo BRP, 68 mm	1	
390	219902677	Logo BRP, 20 mm	1	X And XT Model
400	704901558	Decal, Dynamic Power Steering	1	Except STD
500	704902328	Warning Decal, Death And Injuries	1	Except Europe
500	704902423	Warning Decal, Death And Injuries	1	Europe
510	704902414	Warning Decal, Responsible	1	
520	704902332	Warning Decal, Vehicle	1	

550	704902407	Decal, Public Roads Use	1	Except Europe
560	704902334	Warning Decal, Tire Pressure	1	Except Europe
560	704902425	Warning Decal, Tire Pressure	1	Europe
580	704902336	Warning Decal, Towing	1	Except Europe
580	704902436	Warning Decal, Towing	1	Europe
590	704902345	Warning Decal, Trailer	1	
600	704902338	Warning Decal, Transmission	1	
660	704902343	Warning Decal, Cargo Box	1	
840	704902347	Warning Decal, Passenger	1	
880	704902350	Warning Decal, Injury	2	
890	704902491	Warning Decal, Road Usage	1	Europe
900	704902422	Warning Decal, Multilingual	1	Except North America
910	704902434	Caution Decal, Maximum Load	2	
920	707800373	Decal, Air Filter Maintenance	1	
960	704902420	Warning Decal, MAX 100 kg/222 lb	1	
970	704903434	Notice Decal, Steering	1	Except STD
980	704903515	Warning Decal, Ground And DPS	2	

COMMANDER 2013 STD, DPS, XT, X 1000 EFI / Frame

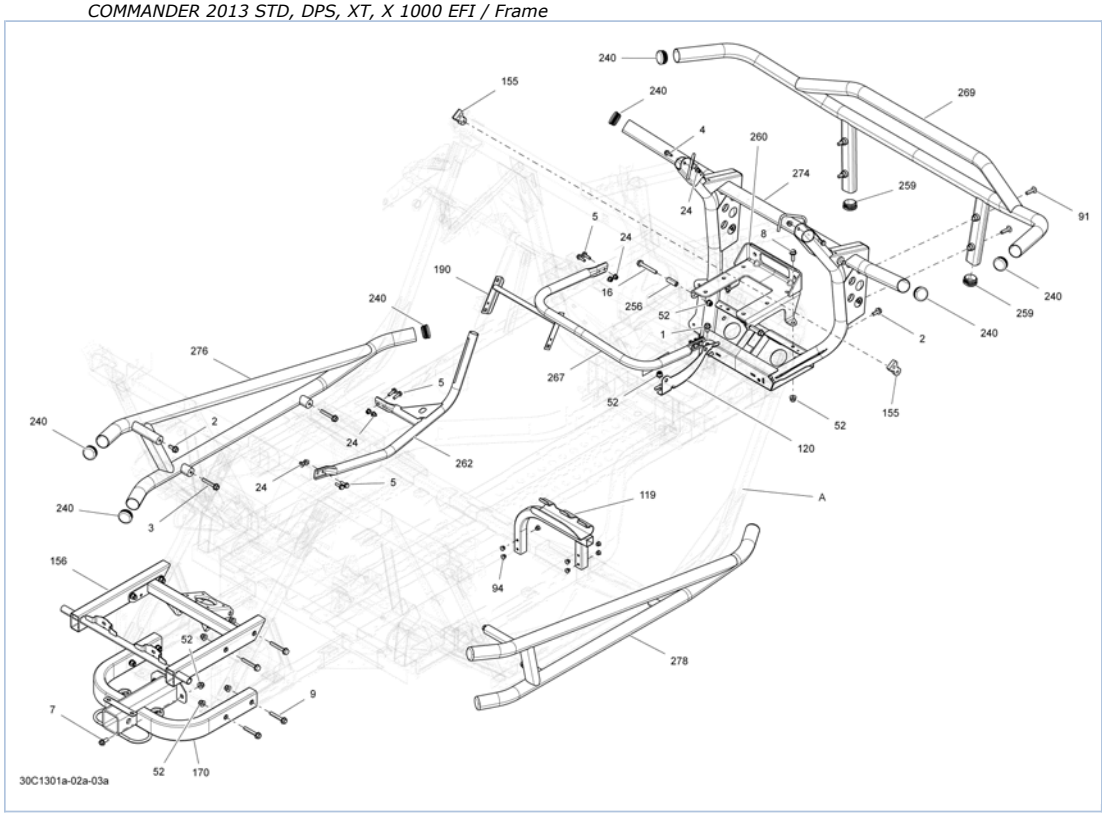

Part List

COMMANDER 2013 STD, DPS, XT, X 1000 EFI / Frame

ITEM	PART NUMBER	PART NAME	QUANTITY	REMARKS
1	207581644	Hex. Flanged Screw M8 X 16, Scotch Grip	1	
2	207582044	Hex. Flanged Screw M8 X 20, Scotch Grip	AR	
3	207585044	HEX. FLANGED SCREW M8 X 50	2	X Model
4	207661644	Hex. Flanged Screw M6 X 16	2	
5	207662044	Hex. Flanged Screw M6 X 20	4	
7	207682044	Hex. Flanged Screw M8 X 20	2	
8	207682544	Hex. Flanged Screw M8 X 25	2	XT Model
9	207685044	HEX. FLANGED SCREW M8 X 50	4	
16	207686044	Hex. Flanged Screw M8 x 60	2	XT Model
24	233261414	Hex. Flanged Elastic Nut M6	6	
52	233281414	Hex. Flanged Elastic Nut M8	11	
91	250000197	Torx Truss Screw M8 X 30	4	X, XT Model
94	293150096	Hemlock Rivet, 6.5 mm	7	
119	715001721	Frame Ass'y	1	
120	705201721	Front Differential Support	1	
155	705202129	Binding Plate	2	
156	705202165	Box holder	1	
170	715001251	Trailer Hitch Ass'y	1	
190	705202463	Panel Reinforcement	1	
240	705202455	Cap	AR	
256	705202499	Bushing	2	XT Model
259	705202631	Tube Cap	2	X model, Europe
260	715000704	WINCH PLATE	1	XT Model
262	705202946	Console Handle	1	
267	705202950	Passenger Handle	1	
269	715000958	Front Bumper, XT, X	1	X, XT Model
274	705202995	Front Bumper	1	
276	705203045	LH Lower Protector	1	X Model
278	705203050	RH Lower Protector	1	X Model
A	715001721	Frame Ass'y	1	

COMMANDER 2013 STD, DPS, XT, X 1000 EFI / Frame Safety Cage

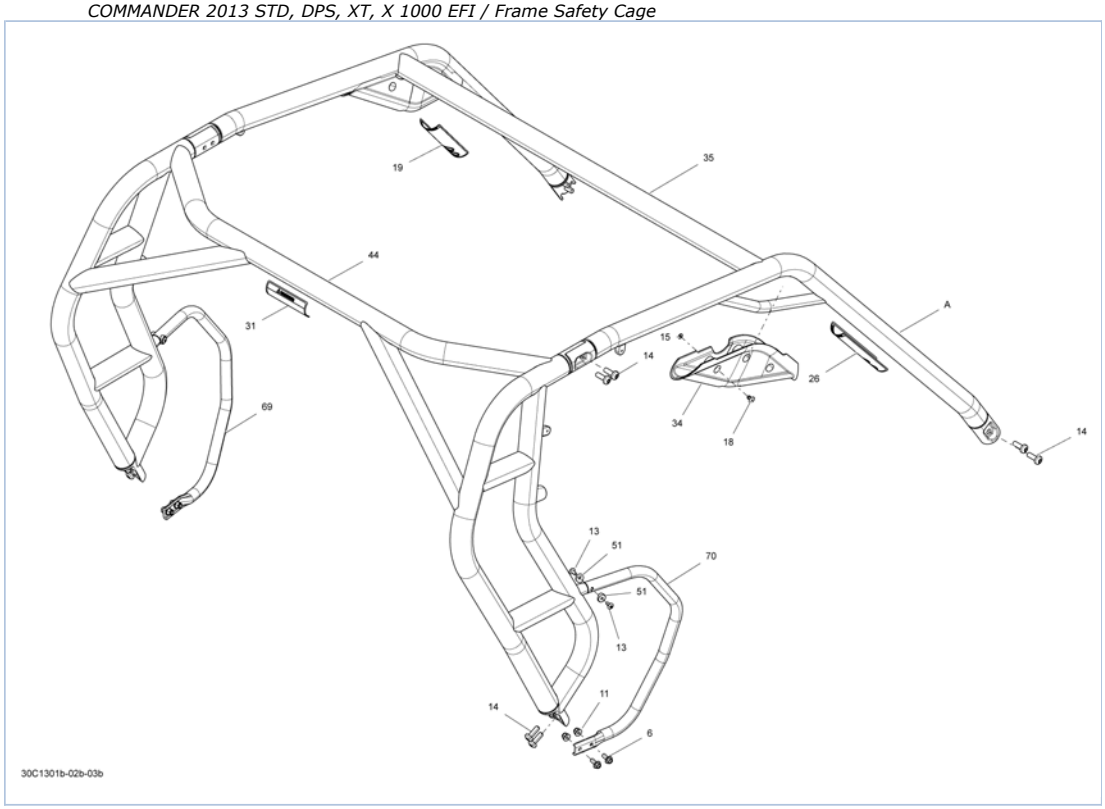

Part List

COMMANDER 2013 STD, DPS, XT, X 1000 EFI / Frame Safety Cage

ITEM	PART NUMBER	PART NAME	QUANTITY	REMARKS
6	207682044	Hex. Flanged Screw M8 X 20	4	
11	233281414	Hex. Flanged Elastic Nut M8	4	
13	250000439	Torx Truss Screw M6 X 14	4	
14	250000624	Screw Torx M10 X 30	12	
15	250200121	Flat Washer	6	
18	293150108	Pop Rivet 3/16"	6	
19	704902413	Warning Label	1	
26	704902415	Warning Label	1	
31	704902424	Warning Label	1	
34	705004985	LH Cage Cap Moulding	1	
34	705004986	RH Cage Cap Moulding	1	
35	XXX	Front Cage	1	
44	XXX	Rear Cage	1	
51	705202223	Offset Washer	4	
69	705202944	LH Side Protecting Tube	1	
70	705202943	RH Side Protecting Tube	1	
A	705203074	Cage Kit	1	

COMMANDER 2013 STD, DPS, XT, X 1000 EFI / Mirrors And Tools

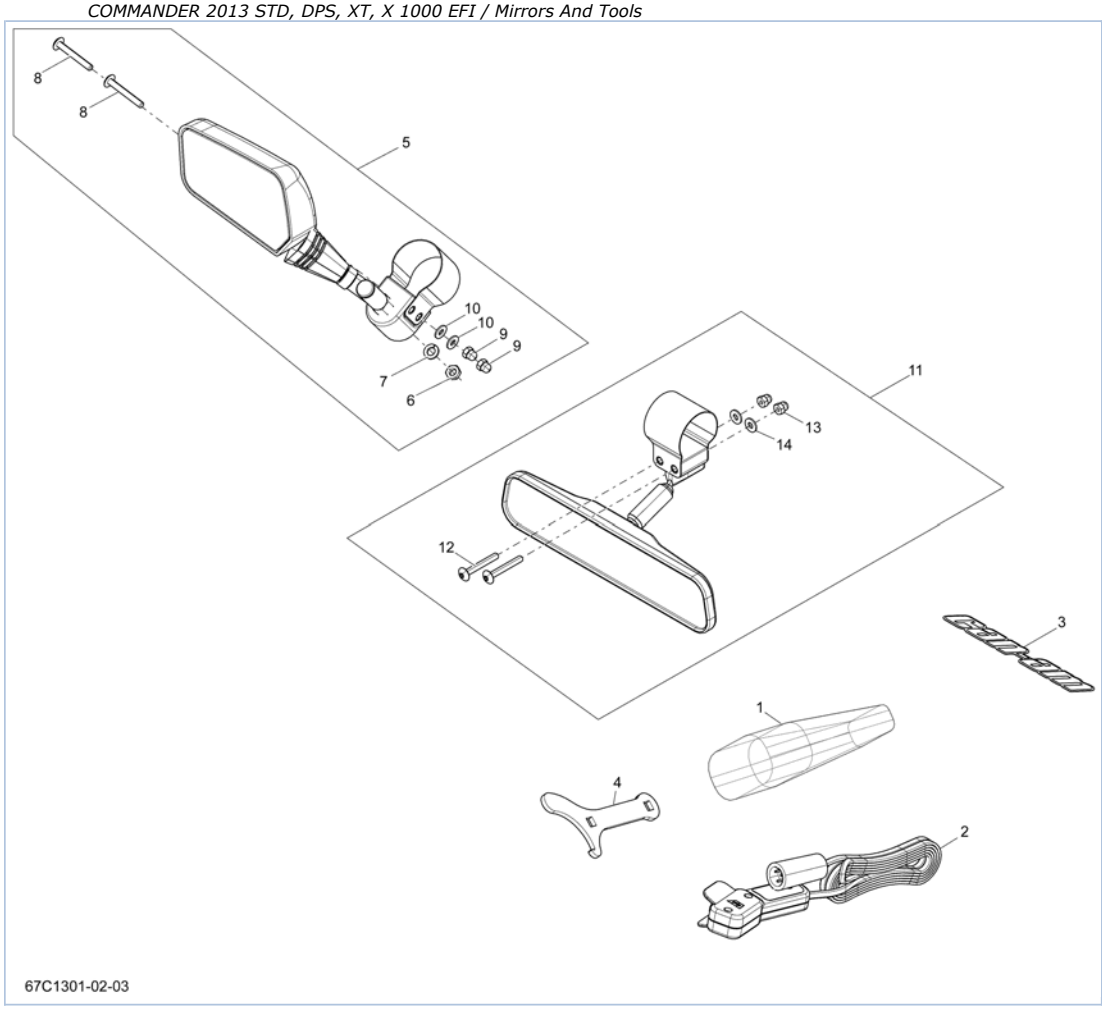

Part List

COMMANDER 2013 STD, DPS, XT, X 1000 EFI / Mirrors And Tools

ITEM	PART NUMBER	PART NAME	QUANTITY	REMARKS
1	704700148	Tool Kit	1	
2	710001002	Remote Control	1	XT
3	704902319	Cage Decal	1	Black/Yellow X Model
3	704903027	Cage Decal	1	Carbon/Black X Model
4	529000057	Adjustment Wrench	1	
5	708200182	Left Mirror Kit	1	Europe, Includes 5 to 10
6	232180600	HEX. JAM NUT M8	1	
7	234181401	Lock Washer 8 mm	1	
8	250000215	Torx Screw M6 X 45	2	
9	232361493	Domed Nut M6	2	
10	250200039	Flat Washer	2	
11	708200183	Center Mirror Kit	1	Europe, Includes 11 to 14
12	250000215	Torx Screw M6 X 45	2	
13	232361493	Domed Nut M6	2	
14	250200039	Flat Washer	2	

COMMANDER 2013 STD, DPS, XT, X 1000 EFI / Rear Cargo Box

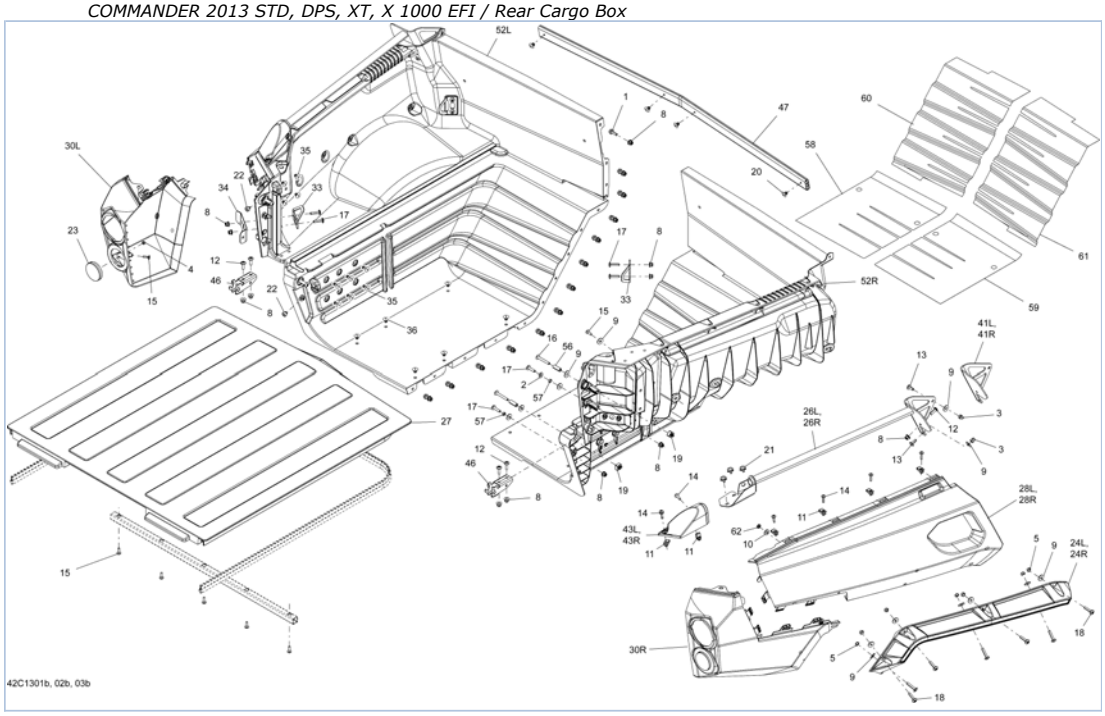

Part List

COMMANDER 2013 STD, DPS, XT, X 1000 EFI / Rear Cargo Box

ITEM	PART NUMBER	PART NAME	QUANTITY	REMARKS
1	207662044	Hex. Flanged Screw M6 X 20	13	
2	224061121	Flat Washer	2	
3	232361493	Domed Nut M6	4	
4	232551414	Elastic Stop Nut M5	2	North America, International
5	232561434	Elastic Stop Nut M6	14	XT Except Europe
5	232561434	Elastic Stop Nut M6	14	Black Carbon Fiber
8	233261414	Hex. Flanged Elastic Nut M6	31	
9	234062670	Flat Washer	27	
10	234081100	Flat Washer 8 mm, Nylon	2	
11	250000079	Panel Nut M5 X 0.8	10	
11	250000079	Panel Nut M5 X 0.8	2	XT
12	250000128	Torx Truss Screw M6 X 20	6	
13	250000129	Torx Screw M6 X 16	12	
14	250000130	Torx Screw M5 X 20	10	
14	250000130	Torx Screw M5 X 20	2	XT
15	250000146	Truss Head Torx Screw K50 X 16	15	
16	250000215	Torx Screw M6 X 45	4	
17	250000284	Torx Screw M6 X 25	12	
18	250000371	Torx Screw M6 X 30 Stainless	14	XT Except Europe
18	250000371	Torx Screw M6 X 30 Stainless	14	Black Carbon Fiber
19	269500725	Nut Housing Ass'y	4	
20	293150104	Pop Rivet 3/16"	4	
21	293150190	POP RIVET 3/16	6	XT
22	293830005	Rubber Plug	4	
23	705002408	Reflector, Red	2	Europe
24L	705003603	LH Upper Rear Mudguards	1	Black Carbon Fiber
24L	705003603	LH Upper Rear Mudguards	1	XT Except Europe
24R	705003604	RH Upper Rear Mudguards	1	Black Carbon Fiber
24R	705003604	RH Upper Rear Mudguards	1	XT Except Europe
26L	708300231	LH Welded Rail	1	XT
26R	708300232	RH Welded Rail	1	XT
27	708300131	Separator Pannel Ass'y	1	
28L	708300101	LH Rear Fender, Yellow	1	DPS
28L	708300101	LH Rear Fender, Yellow	1	XT Yellow
28L	708300226	LH Rear Fender, Red	1	XT Red
28L	708300437	LH Rear Fender, Camo	1	XT CAMO
28L	708300439	LH Rear Fender, Black	1	X Black
28L	708300548	LH Rear Fender, Magnesium	1	Magnesium
28L	708300666	LH Rear Fender, Red	1	STD
28L	708300668	LH Rear Fender, Graphite	1	Black Carbon Fiber
28R	708300102	RH Rear Fender, Yellow	1	DPS
28R	708300102	RH Rear Fender, Yellow	1	XT Yellow
28R	708300227	RH Rear Fender, Red	1	XT Red
28R	708300438	RH Rear Fender, Camo	1	XT CAMO
28R	708300440	RH Rear Fender, Black	1	X Black
28R	708300550	RH Rear Fender, Magnesium	1	Magnesium
28R	708300667	RH Rear Fender, Red	1	STD
28R	708300669	RH Rear Fender, Graphite	1	Black Carbon Fiber
30L	708300103	LH Rear Facia	1	STD Except Europe, X Except Europe
30L	708300103	LH Rear Facia	1	DPS
30L	708300103	LH Rear Facia	1	Black Carbon Fiber
30L	708300103	LH Rear Facia	1	XT Except Europe
30L	708300103	LH Rear Facia	1	XT Europe

30L	708300559	LH Rear Facia	1	STD Europe, X Europe
30R	708300104	RH Rear Facia	1	STD Except Europe, X Except Europe
30R	708300104	RH Rear Facia	1	DPS
30R	708300104	RH Rear Facia	1	XT Except Europe
30R	708300104	RH Rear Facia	1	Black Carbon Fiber
30R	708300104	RH Rear Facia	1	XT Europe
30R	708300560	RH Rear Facia	1	STD Europe, X Europe
33	708300183	Retaining Plate	4	
34	708300206	Retaining Plate Support	2	
35	293150100	Pop Rivet 3/16"	20	
36	293150104	Pop Rivet 3/16"	12	
41L	708300333	LH Painted Rail Cap	1	STD, DPS, X
41R	708300334	RH Painted Rail Cap	1	STD, DPS, X
43L	708300233	LH Rail Cover	1	XT
43R	708300234	RH Rail Cover	1	XT
46	708300345	Upper Pivot Support	2	
47	708300346	Front Support	1	
52L	715001259	LH Box Ass'y	1	
52R	715001257	RH Box Ass'y	1	
56	708300736	Spacer	4	
57	708300737	Bushing	4	
58	708300809	Heat Deflector Sheet	1	
59	708300810	Heat Deflector Sheet	1	
60	708300811	Heat Deflector Sheet	1	
61	708300812	Heat Deflector Sheet	1	
62	732610072	Push Nut	2	

COMMANDER 2013 STD, DPS, XT, X 1000 EFI / Rear Cargo Box Doors

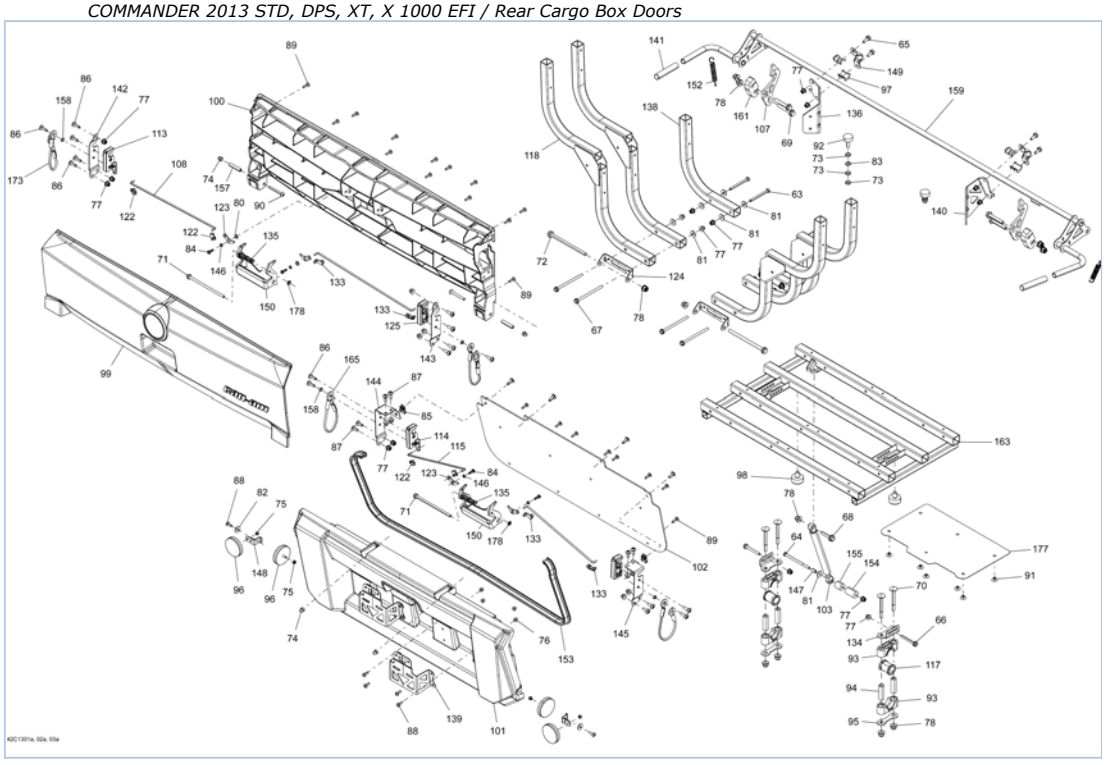

Part List

COMMANDER 2013 STD, DPS, XT, X 1000 EFI / Rear Cargo Box Doors

ITEM	PART NUMBER	PART NAME	QUANTITY	REMARKS
63	207066544	Hex. Screw M6 x 65	4	
64	207069044	Hex. Screw M6 X 90	1	
65	207661644	Hex. Flanged Screw M6 X 16	4	
66	207665044	Hex. Flanged Screw M6 X 50	2	
67	207669584	Hex. Flanged Screw M6 X 95	4	
68	207683544	Hex. Flanged Screw M8 X 35	1	
69	207685046	HEX. FLANGED SCREW M8 X 50	4	
70	207787044	Carriage Bolt M8 X 70	4	
71	230663084	HEX. FLANGED SCREW M6 X 130	2	
72	230683034	Hex. Flanged Screw M8 X 130	2	
73	232180600	HEX. JAM NUT M8	6	
74	232361493	Domed Nut M6	2	
75	232551414	Elastic Stop Nut M5	4	
76	233251414	Hex. Flanged Elastic Nut M5	8	Europe
77	233261414	Hex. Flanged Elastic Nut M6	13	
78	233281414	Hex. Flanged Elastic Nut M8	AR	
80	234061410	Flat Washer 6 mm	2	
81	234062410	Flat Washer 6 mm	12	
82	234062670	Flat Washer	AR	
83	234181401	Lock Washer 8 mm	2	
84	241151640	Hex. Flanged Screw K50 X 16	4	
85	250000048	Pannel Nut M6 X 1.0	2	
86	250000128	Torx Truss Screw M6 X 20	2	
87	250000129	Torx Screw M6 X 16	4	
88	250000145	Torx Screw M5 X 14	AR	Europe
89	250000146	Truss Head Torx Screw K50 X 16	AR	
90	250000239	Torx Truss Screw M6 X 50	2	
91	293150103	Pop Rivet 3/16"	6	
92	293720091	Frame Rubber Bumper	2	
93	506150400	Housing Half	4	
94	506150500	Housing Bushing	4	
95	506150600	Stopper Plate	2	
96	705002408	Reflector, Red	4	North America, International
97	705500033	Half Ring	4	
98	708000884	Rubber Stopper	2	
99	708300052	Outside Top Pannel, Yellow	1	XT Yellow
99	708300052	Outside Top Pannel, Yellow	1	X Black
99	708300052	Outside Top Pannel, Yellow	1	DPS
99	708300441	Outside Top Pannel, Red	1	Red
99	708300442	Outside Top Pannel, Camo	1	CAMO
99	708300552	Outside Top Pannel, Magnesium	1	Magnesium
99	708300673	Outside Top Pannel, Black Metal	1	Black Carbon Fiber
100	708300053	Inside Top Pannel	1	
101	715001255	Lower Panel Ass'y	1	
102	708300073	Inside Bottom Pannel	1	
103	708300512	GAZ SHOCK	1	
107	708300136	Box Retainer	2	
108	708300160	Top Rod	2	
113	708300162	LH Latch	2	
115	708300164	Lower Bottom Rod	2	

117	708300172	Pivot Bushing	2	
118	708300174	Welded Lateral Support, Black	4	
122	708300182	LH Tie Rod Clip	4	
123	708300184	Activator	4	
124	708300185	BRACKET PIVOT	2	
125	708300201	RH Latch	2	
133	708300202	RH Tie Rod Clip	2	
134	708300210	Adjustable Stopper Plate	2	
135	708300219	Spring	2	
136	708300278	LH Latch Lever Support	1	
138	708300340	Lateral Support, Black	2	
139	708300349	Plate Support	2	Europe
140	708300351	RH Latch Lever Support	1	
141	708300358	Cap Latch Lever	2	
142	708300359	LH Upper Support	1	
143	708300360	RH Upper Support	1	
144	708300361	LH Lower Support	1	
145	708300362	RH Lower Support	1	
146	708300365	Bushing	4	
147	708300366	Bushing	1	
148	708300367	Reflector Support	2	Europe
149	708300392	Clamp Reatiner	2	
150	708300398	Handle	2	
152	708300454	Spring	2	
153	293250240	Neoprene Seal	AR	
154	708300470	Spacer	1	
155	708300471	Spacer	1	
157	708300735	Bushing	2	
158	708300737	Bushing	4	
159	708300751	Cargo Handle Ass'y	1	
161	708300754	Spacer	2	
163	708300758	Welded Box Support	1	
165	708300762	Lower Retainer Cable	2	
173	708300763	Upper Retainer Cable	2	
177	708300780	Heat Deflector	1	
178	732610072	Push Nut	2	

COMMANDER 2013 STD, DPS, XT, X 1000 EFI / Seat

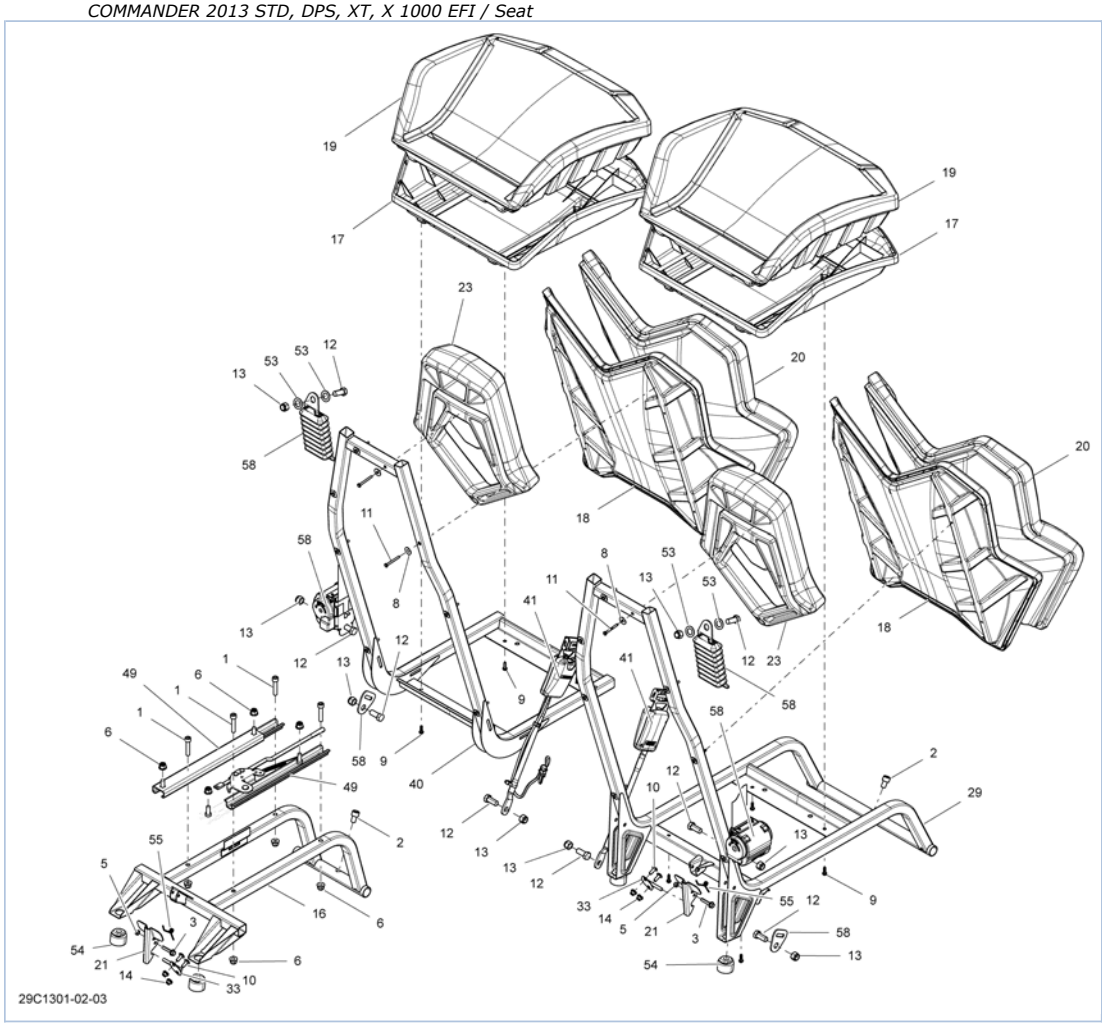

Part List

COMMANDER 2013 STD, DPS, XT, X 1000 EFI / Seat

ITEM	PART NUMBER	PART NAME	QUANTITY	REMARKS
1	205084044	Socket Head Screw M8 X 40	4	
2	205501644	Socket Screw M10 X 16	2	
3	207663044	Hex. Flanged Screw M6 X 30	2	
5	232561600	Hex. Elastic Stop Nut M6	2	
6	233281414	Hex. Flanged Elastic Nut M8	8	
8	234062670	Flat Washer	8	
9	241151640	Hex. Flanged Screw K50 X 16	4	
10	250000223	Torx Screw M6 X 16	4	
11	250000490	Hex. Washer Head Screw PT K50 X 40	8	
12	250000521	Hex. Cap Screw 7/16''X 1''	6	
13	250100135	Nylon Insert Hex. Lock Nut 7/16-20	6	
14	293450274	Insert	4	
16	708000667	Seat Member	1	
17	708001102	CUSHION ASS'Y	2	STD, DPS, XT Model
17	708001083	Cushion Ass'y, Modele X	2	Black/Yellow
17	708001085	Cushion Ass'y, Modele X	2	Carbon/Black
18	708001079	Backrest Ass'y, X Model	1	Black/Yellow
18	708001081	Backrest Ass'y, X Model	1	Carbon/Black
18	708000669	BACKREST ASS'Y	1	STD, DPS, XT Model
19	708001084	Cover Seat, X Model	2	Black/Yellow
19	708001086	Cover Seat, X Model	2	Carbon/Black
19	708001103	COVER SEAT	2	STD, DPS, XT Model
20	708001080	Backrest Cover X Model	2	Black/Yellow
20	708001082	Backrest Cover X Model	2	Carbon/Black
20	708000675	Backrest Cover	2	STD, DPS, XT Model
21	708000678	SEAT LATCH	2	
23	708000711	Head Rest	2	
29	708000690	Passenger Seat Frame	1	
33	708000794	Lock Stem	2	
40	708000739	Driver Seat Frame	1	
41	708000844	Passenger Buckle Side	1	
41	708000857	Passenger Buckle Side, Europe	1	Europe
49	708000848	LH Rail	1	
49	708000846	RH Rail	1	
53	708000891	Position Washer	4	
54	708000899	Rubber Bumper	4	
55	708000921	Spring	2	
58	708001108	Safety Belt	2	
58	708001130	Safety Belt	2	Europe

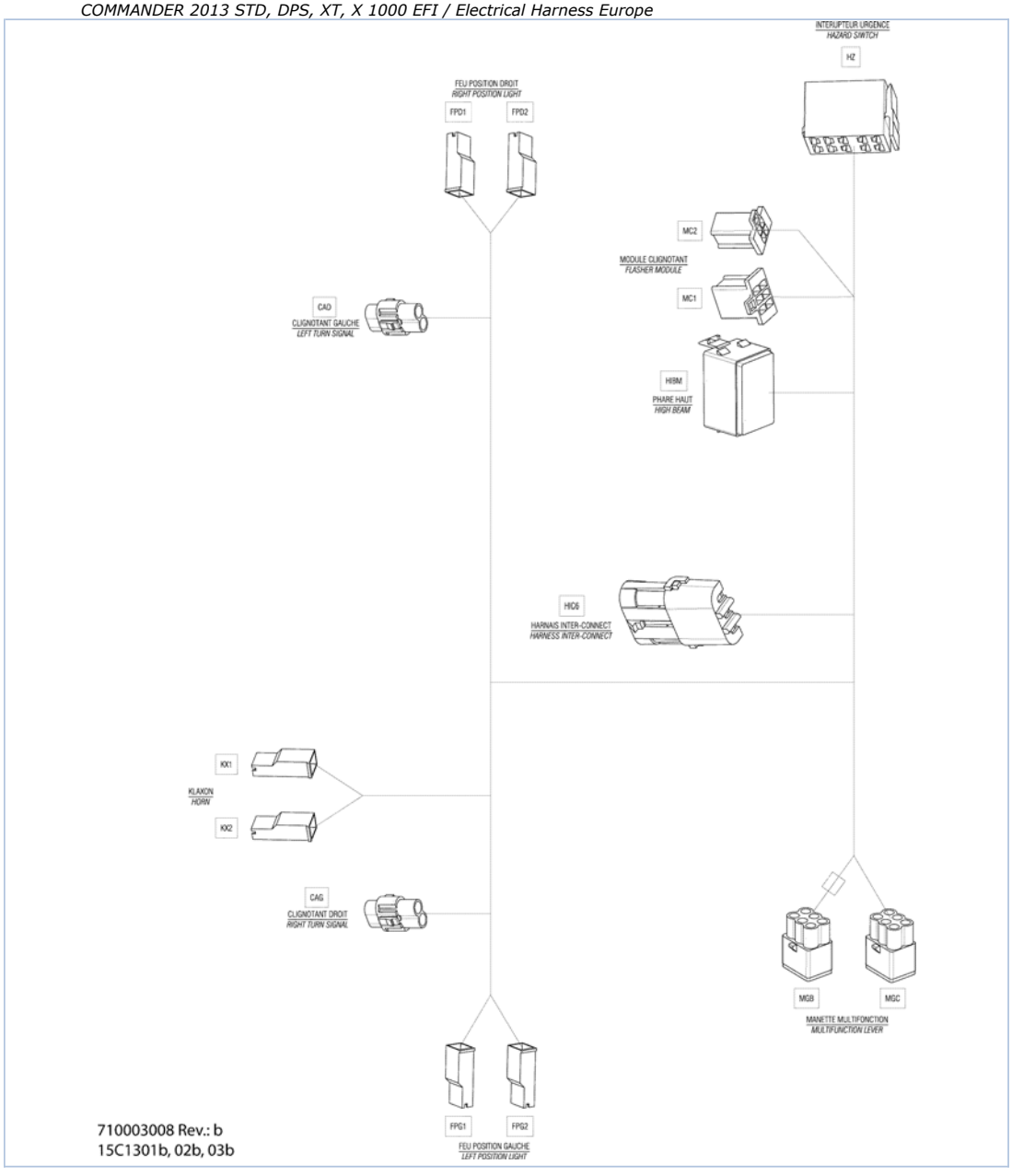
INTERUPTEUR URGENCE
HAZARD SWITCH
HZ
FEU POSITION DROIT
RIGHT POSITION LIGHT
FPD1
FPD2
MC2
MODULE CLIGNOTANT
FLASHER MODULE
MC1
CAD
CLIGNOTANT GAUCHE
LEFT TURN SIGNAL
HBM
PHARE HAUT
HIGH BEAM
HIC6
HARNAIS INTER-CONNECT
HARNESS INTER-CONNECT
KX1
KLAXON
HORN
KX2
CAG
CLIGNOTANT DROIT
RIGHT TURN SIGNAL
MGB
MGC
MANETTE MULTIFONCTION
MULTIFUNCTION LEVER
FPG1
FPG2
FEU POSITION GAUCHE
LEFT POSITION LIGHT
710003008 Rev.: b
15C1301b, 02b, 03b

Part List

COMMANDER 2013 STD, DPS, XT, X 1000 EFI / Electrical Harness Europe

ITEM	PART NUMBER	PART NAME	QUANTITY	REMARKS
1	710003008	Harness Ass'y	1	EUR
CAD	409012100	Female Terminal	AR	
CAD	409012300	Seal	AR	
CAD	XXX	Female Housing, 2 Circuits	AR	
CAG	409012100	Female Terminal	AR	
CAG	409012300	Seal	AR	
CAG	409209200	Housing	AR	
D3	409012700	Diode	AR	
D4	409012700	Diode	AR	
FPD1	293550006	Female Terminal	AR	
FPD1	409010100	Female Terminal	AR	
FPD1	409010400	Female Terminal Housing, 1 Circuit	AR	
FPD1	710000751	Shrink Tubing	AR	
FPD2	293550006	Female Terminal	AR	
FPD2	409010100	Female Terminal	AR	
FPD2	409010400	Female Terminal Housing, 1 Circuit	AR	
FPD2	710000751	Shrink Tubing	AR	
FPG1	293550006	Female Terminal	AR	
FPG1	409010100	Female Terminal	AR	
FPG1	409010400	Female Terminal Housing, 1 Circuit	AR	
FPG1	710000751	Shrink Tubing	AR	
FPG2	293550006	Female Terminal	AR	
FPG2	409010100	Female Terminal	AR	
FPG2	409010400	Female Terminal Housing, 1 Circuit	AR	
FPG2	710000751	Shrink Tubing	AR	
HIBM	293550006	Female Terminal	AR	
HIBM	710002407	Housing	AR	
HIBM	710002863	Terminal	AR	
HIC6	278000222	Male Terminal	AR	
HIC6	278000281	Female Terminal Housing, 3 Circuits	AR	
HIC6	278000585	Wire Seal (20 Gauge) (Purple)(Packard)	AR	
HIC6	710000992	Clip	AR	
HZ	293550006	Female Terminal	AR	
HZ	710001931	Terminal	AR	
HZ	710002000	Housing	AR	
KX1	293550006	Female Terminal	AR	
KX1	409010100	Female Terminal	AR	
KX1	409010400	Female Terminal Housing, 1 Circuit	AR	
KX1	710000751	Shrink Tubing	AR	
KX2	293550006	Female Terminal	AR	
KX2	409010100	Female Terminal	AR	
KX2	409010400	Female Terminal Housing, 1 Circuit	AR	
KX2	710000751	Shrink Tubing	AR	
MC1	293550006	Female Terminal	AR	
MC1	710002314	Housing	AR	
MC1	710002315	Terminal	AR	
MC2	293550006	Female Terminal	AR	
MC2	710002313	Housing	AR	
MC2	710002315	Terminal	AR	
MGB	409012100	Female Terminal	AR	

MGB	409012300	Seal	AR	
MGB	710000080	Cap	AR	
MGB	710000081	Female Housing, 6 Circuits	AR	
MGC	409012100	Female Terminal	AR	
MGC	409012300	Seal	AR	
MGC	710000080	Cap	AR	
MGC	710000081	Female Housing, 6 Circuits	AR	

COMMANDER 2013 STD, DPS, XT, X 1000 EFI / Electrical Harness Rear, EUROPE

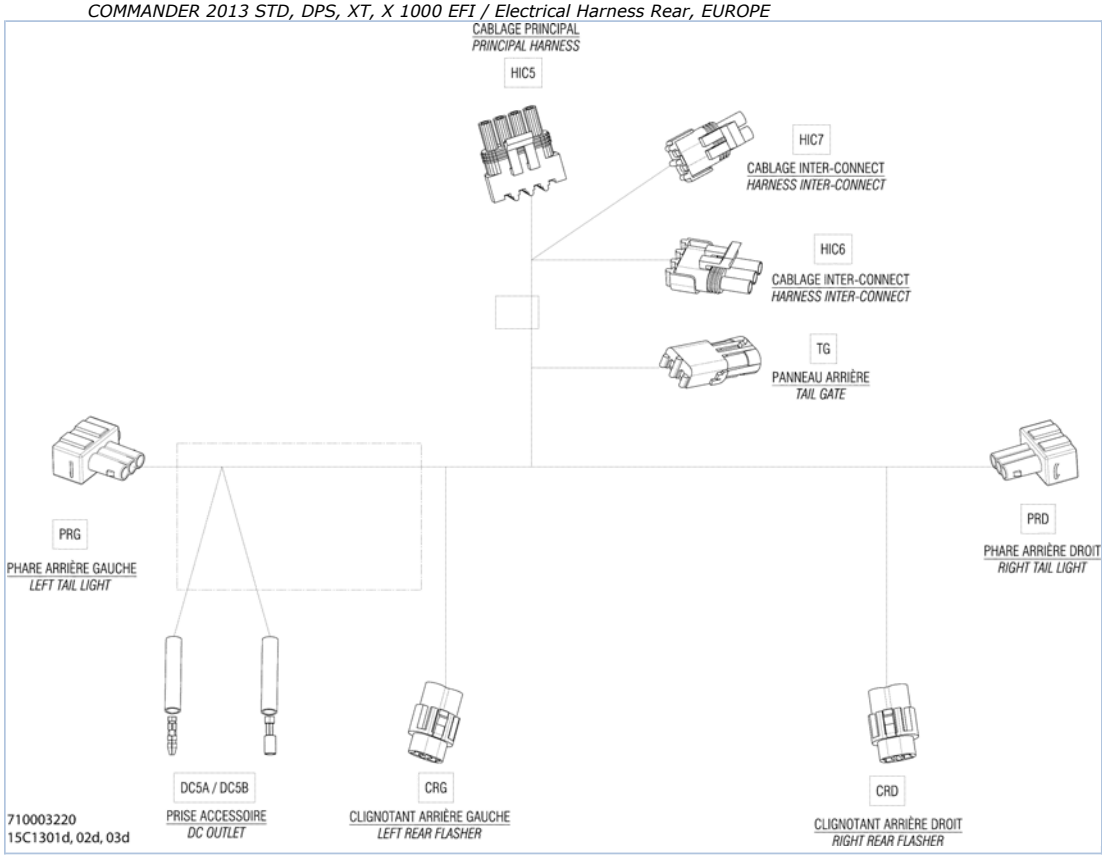

Part List

COMMANDER 2013 STD, DPS, XT, X 1000 EFI / Electrical Harness Rear, EUROPE

ITEM	PART NUMBER	PART NAME	QUANTITY	REMARKS
1	710003220	REAR HARNESS	1	EUR
PRD	278000998	Female Terminal	6	EUR
PRG	278000998	Female Terminal	6	EUR
TG	278000222	Male Terminal	2	EUR
HIC7	409007300	Female Terminal	2	EUR
HIC5	278000223	Female Terminal	7	EUR
HIC6	278000223	Female Terminal	7	EUR
TG	278000217	Female Housing, 2 Circuits	1	EUR
HIC7	278000220	Male Connector, 2 Circuits	1	EUR
HIC6	278000273	Male Housing, 3 Circuits	1	EUR
HIC5	278000395	Male Housing, 4 Circuits	1	EUR
HIC7	278000218	Wire Seal	2	EUR
CRD	409012100	Female Terminal	4	EUR
CRG	409012100	Female Terminal	4	EUR
CRD	XXX	Female Housing, 2 Circuits	2	EUR
CRD	409012300	Seal	4	EUR
CRG	409012300	Seal	4	EUR
DC5A	278001008	Insulated Sheath	1	EUR
DC5B	278001007	Insulated Sheath	1	EUR
PRD	415128501	Seal	6	EUR
PRG	415128501	Seal	6	EUR
HIC5	278001065	Wire Seal	9	EUR
DC5B	710000421	Female Terminal	1	EUR
DC5A	278002261	Female Terminal	1	EUR

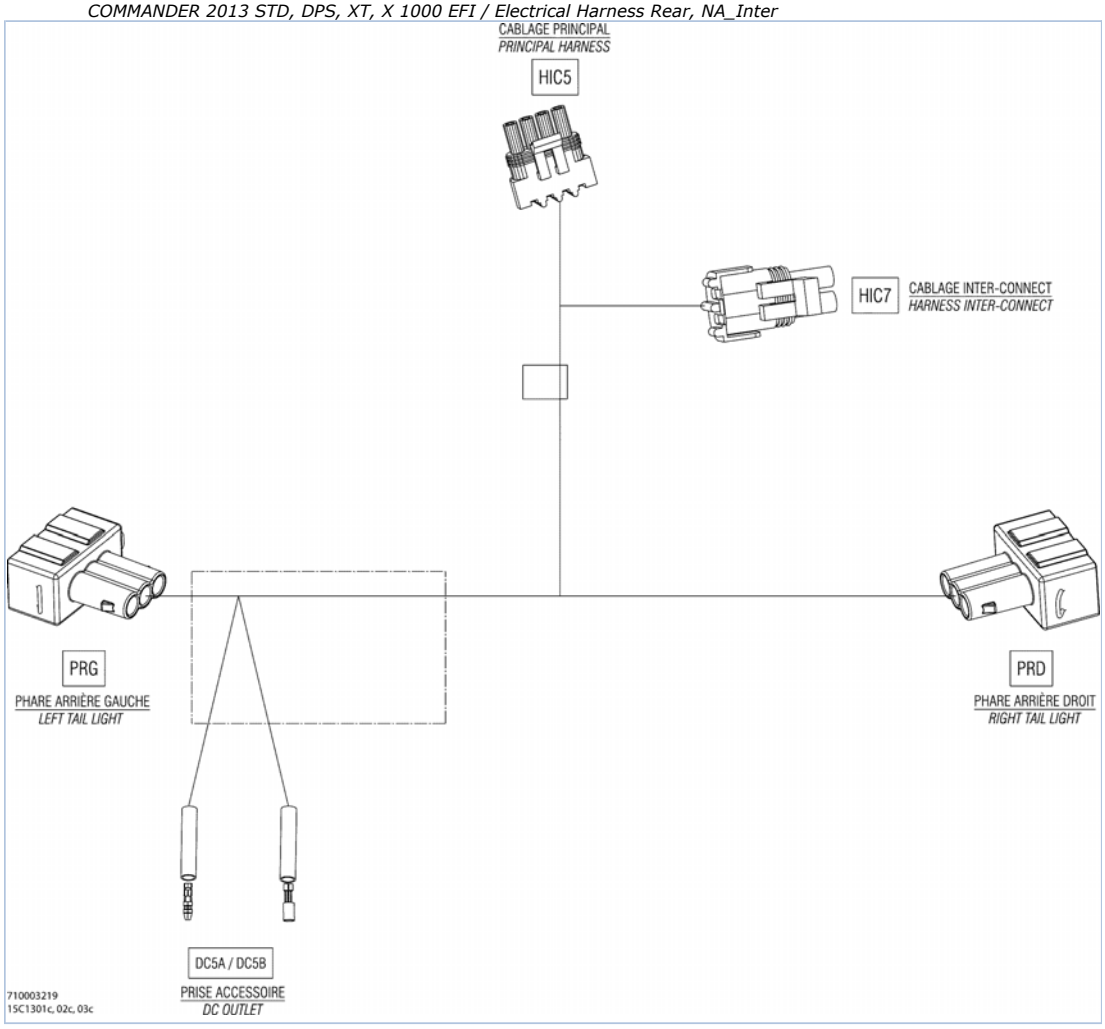
CABLAGE PRINCIPAL
PRINCIPAL HARNESS
HIC5
HIC7
CABLAGE INTER-CONNECT
HARNESS INTER-CONNECT
PRG
PHARE ARRIÈRE GAUCHE
LEFT TAIL LIGHT
PRD
PHARE ARRIÈRE DROIT
RIGHT TAIL LIGHT
DC5A / DC5B
PRISE ACCESSOIRE
DC OUTLET
710003219
15C1301c, 02c, 03c

Part List

COMMANDER 2013 STD, DPS, XT, X 1000 EFI / Electrical Harness Rear, NA_Inter

ITEM	PART NUMBER	PART NAME	QUANTITY	REMARKS
1	710003219	REAR HARNESS	1	North America, Inter
504	278001065	Wire Seal	AR	North America, Inter
DC5A	278001008	Insulated Sheath	AR	North America, Inter
DC5A	278002261	Female Terminal	AR	North America, Inter
DC5B	278001007	Insulated Sheath	AR	North America, Inter
DC5B	710000421	Female Terminal	AR	North America, Inter
DC5B	293550006	Female Terminal	AR	North America, Inter
HIC5	278000223	Female Terminal	AR	North America, Inter
HIC5	278000395	Male Housing, 4 Circuits	AR	North America, Inter
HIC5	278000585	Wire Seal (20 Gauge) (Purple)(Packard)	AR	North America, Inter
HIC7	409007300	Female Terminal	AR	North America, Inter
HIC7	278000220	Male Connector, 2 Circuits	AR	North America, Inter
HIC7	278000218	Wire Seal	AR	North America, Inter
PRD	278000998	Female Terminal	AR	North America, Inter
PRD	415128501	Seal	AR	North America, Inter
PRD	XXX	Housing	AR	North America, Inter
PRG	278000998	Female Terminal	AR	North America, Inter
PRG	XXX	Housing	AR	North America, Inter

COMMANDER 2013 STD, DPS, XT, X 1000 EFI / Electrical Harness STD, X, XT, DPS

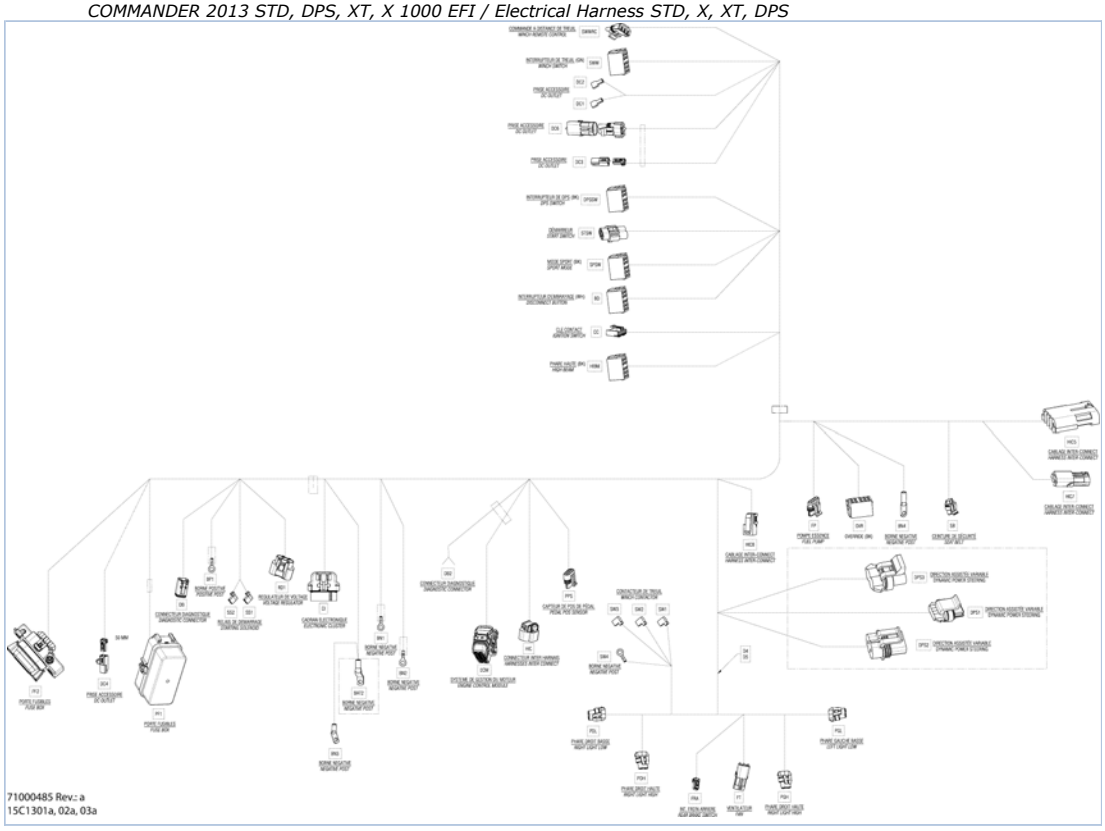

Part List

COMMANDER 2013 STD, DPS, XT, X 1000 EFI / Electrical Harness STD, X, XT, DPS

ITEM	PART NUMBER	PART NAME	QUANTITY	REMARKS
1	710002485	Harness Ass'y	1	Includes 1 to SWWRC
BD	293550006	Female Terminal	AR	
BD	710001931	Terminal	AR	
BD	710002001	Housing Connector	AR	
BN1	710000913	Terminal	AR	
BP1	710000913	Terminal	AR	
CA	710001634	Housing	AR	
CA	710001630	Terminal	AR	
CA	710001637	Seal	AR	
CA	710001633	Lock	AR	
CC	710000274	Female Terminal	AR	
CC	710000848	Lock	AR	
CC	710000849	Male Housing, 6 Circuits	AR	
CC	710001635	Terminal	AR	
CI	515175812	Plug	AR	
CI	515175801	Female Housing, 24 Circuits	AR	
CI	515175802	Retainer Block	AR	
CI	515175803	Wire Seal	AR	
CI	710000399	Female Housing	AR	
CI	710001131	Female Terminal	AR	
D2	409012700	Diode	AR	
D4	409012700	Diode	AR	
D5	409012700	Diode	AR	
DB	293000052	Sealing Cap	AR	
DB	515175673	Male Housing, 6 Circuits	AR	
DB	515175678	Male Wedge, 6 Circuits	AR	
DB	278001665	Female Terminal	AR	
DB2	293000052	Sealing Cap	AR	
DB2	515175673	Male Housing, 6 Circuits	AR	
DB2	515175678	Male Wedge, 6 Circuits	AR	
DB2	278001665	Female Terminal	AR	
DC1	293550006	Female Terminal	AR	
DC1	409010800	Female Terminal	AR	
DC2	293550006	Female Terminal	AR	
DC2	710000038	Female Terminal	AR	
DC3	293550006	Female Terminal	AR	
DC3	515175231	Female Terminal	AR	
DC3	515175658	Female Housing, 2 Circuits	AR	
DC3	710000667	Male Housing, 2 Circuits	AR	
DC4	515175231	Female Terminal	AR	
DC4	515175658	Female Housing, 2 Circuits	AR	
DC4	293550006	Female Terminal	AR	
DC4	710000667	Male Housing, 2 Circuits	AR	
DC5	293550006	Female Terminal	AR	
DC5	710001159	Wire Seal	AR	
DC5	710001160	Female Terminal	AR	
DC5	710001157	Housing	AR	
DC5	710001323	Lock	AR	
DC6	409007300	Female Terminal	AR	
DC6	278000217	Female Housing, 2 Circuits	AR	
DC6	278000220	Male Connector, 2 Circuits	AR	
DC6	278000218	Wire Seal	AR	
DC6	278000216	Wire Seal	AR	
DC6	710000992	Clip	AR	
ECM	710001588	Female Terminal Housing, 48	AR	

		Circuits		
ECM	710001589	Female Terminal	AR	
ECM	710001591	Cover	AR	
ECM	710001592	Plug	AR	
ECM	710001593	Plug	AR	
ECM	710001727	Female Terminal	AR	
FP	278001014	Female Terminal	AR	
FP	409209700	Female Housing, 4 Circuits	AR	
FP	278001013	Wire Seal	AR	
FP	710001340	Female Terminal	AR	
FP	515176621	Wire Seal	AR	
FRA	515175231	Female Terminal	AR	
FRA	515175658	Female Housing, 2 Circuits	AR	
FRA	293550006	Female Terminal	AR	
FT	278000217	Female Housing, 2 Circuits	AR	
FT	278000218	Wire Seal	AR	
FT	710000992	Clip	AR	
FT	409004300	Male Terminal	AR	
HIBM	293550006	Female Terminal	AR	
HIBM	710001931	Terminal	AR	
HIBM	710000221	Female Terminal	AR	
HIBM	710002000	Housing	AR	
HIBM2	409007300	Female Terminal	AR	
HIBM2	278000221	Male Connector, 6 Circuits	AR	
HIBM2	278000218	Wire Seal	AR	
HIBM2	278000216	Wire Seal	AR	
HIBM2	278000585	Wire Seal (20 Gauge) (Purple)(Packard)	AR	
HIBM2	270000137	Female Connector, 6 Circuits	AR	
HIBM2	278000223	Female Terminal	AR	
HIC	710001230	Seal	AR	
HIC	710001233	Seal	AR	
HIC	710001229	Terminal	AR	
HIC	710001228	Terminal	AR	
HIC	710001225	Cap	AR	
HIC	710001221	Lock	AR	
HIC	710001928	Housing	AR	
HIC5	278000222	Male Terminal	AR	
HIC5	278000585	Wire Seal (20 Gauge) (Purple)(Packard)	AR	
HIC5	710000992	Clip	AR	
HIC5	278000394	Female Housing, 4 Circuits	AR	
LB1	515175231	Female Terminal	AR	
LB1	515175658	Female Housing, 2 Circuits	AR	
LB1	293550006	Female Terminal	AR	
LB2	515175232	Male Terminal	AR	
LB2	515175654	Male Terminal Housing, 2 Circuits	AR	
OVR	293550006	Female Terminal	AR	
OVR	710001931	Terminal	AR	
OVR	710002000	Housing	AR	
PDH	710001142	Terminal Housing, 2 Circuits	AR	
PDH	710001143	Female Terminal	AR	
PDH	710001427	Wire Seal	AR	
PDL	710001142	Terminal Housing, 2 Circuits	AR	
PDL	710001143	Female Terminal	AR	
PDL	710001427	Wire Seal	AR	
PF1	710000742	Little Fuse, 5 Amperes	AR	
PF1	710000742	Little Fuse, 5 Amperes	AR	
PF1	710000742	Little Fuse, 5 Amperes	AR	

PF1	710000742	Little Fuse, 5 Amperes	AR	
PF1	710000742	Little Fuse, 5 Amperes	AR	
PF1	710000745	Little Fuse, 15 Amperes	AR	
PF1	710000747	Little Fuse, 30 Amperes	AR	
PF1	515176774	Relay, 30 AMP	AR	
PF1	710001778	Relay	AR	
PF1	710001778	Relay	AR	
PF1	710002177	Housing	AR	
PF1	278000999	Wire Seal	AR	
PF1	415128501	Seal	AR	
PF1	710000742	Little Fuse, 5 Amperes	AR	
PF1	710000743	Little Fuse, 7.5 Amperes	AR	
PF1	710000744	Little Fuse, 10 Amperes	AR	
PF1	710000745	Little Fuse, 15 Amperes	AR	
PF1	710000747	Little Fuse, 30 Amperes	AR	
PF1	710000660	Fuse Box Ass'y	AR	
PF1	710000781	Fuse Puller	AR	
PF1	710000836	Female Terminal	AR	
PF1	710000837	Female Terminal	AR	
PF1	710000840	Cap	AR	
PF1	710001026	Fuse Cover	AR	
PF1	278002172	Foam	AR	
PF1	515176774	Relay, 30 AMP	AR	
PF1	710001778	Relay	AR	
PF2	710001047	Fuse, 40 AMP	AR	
PF2	710001633	Lock	AR	
PF2	278001392	Open Barrel	AR	
PF2	710001200	FUSE 30 AMP.	AR	
PF2	710001632		AR	
PF2	710001636	Terminal	AR	
PF2	233261494	Hex. Elastic Flanged Nut M6	AR	
PF2	710001905	Terminal Joint	AR	
PF2	710001996	Housing	AR	
PGH	710001142	Terminal Housing, 2 Circuits	AR	
PGH	710001143	Female Terminal	AR	
PGH	710001427	Wire Seal	AR	
PGL	710001142	Terminal Housing, 2 Circuits	AR	
PGL	710001143	Female Terminal	AR	
PGL	710001427	Wire Seal	AR	
PPS	710001119	Female Terminal	AR	
PPS	278002299	Female Terminal Housing, 6 Circuits	AR	
RD1	710001934	Terminal	AR	
RD1	710000879	Housing, 3 Circuits	AR	
RD1	710000882	Cap	AR	
RD1	710001932	Seal	AR	
RD2	710000880	Housing, 3 Circuits	AR	
RD2	710001934	Terminal	AR	
RD2	710001932	Seal	AR	
SB	710001134	Female Terminal	AR	
SB	278001482	Seal	AR	
SB	710002177	Housing	AR	
SB	710002043	Lock	AR	
SPSW	293550006	Female Terminal	AR	
SPSW	710001931	Terminal	AR	
SPSW	710002000	Housing	AR	
SS1	409010300	Female Terminal	AR	
SS2	409010300	Female Terminal	AR	
STSW	409012100	Female Terminal	AR	

STSW	XXX	Female Housing, 2 Circuits	AR	
STSW	409012300	Seal	AR	
SW1	409010300	Female Terminal	AR	
SW1	293550006	Female Terminal	AR	
SW2	409010300	Female Terminal	AR	
SW2	293550006	Female Terminal	AR	
SW3	710000038	Female Terminal	AR	
SW3	293550006	Female Terminal	AR	
SW4	710000482	Shrink Tubing	AR	
SW4	278000992	Open Barrel	AR	
SWW	293550006	Female Terminal	AR	
SWW	710001931	Terminal	AR	
SWW	710002003	Housing Connector	AR	
SWWRC	278000223	Female Terminal	AR	
SWWRC	278000585	Wire Seal (20 Gauge) (Purple)(Packard)	AR	
SWWRC	278000273	Male Housing, 3 Circuits	AR	

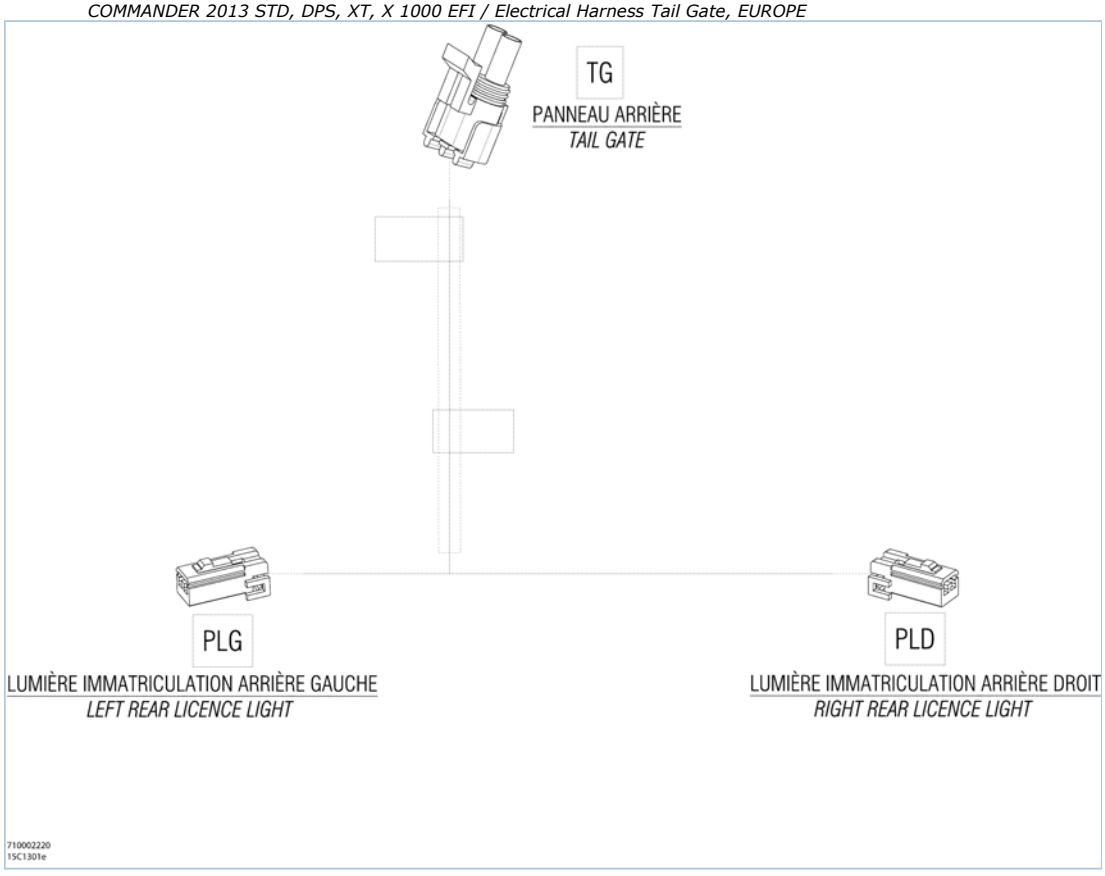
TG
PANNEAU ARRIÈRE
TAIL GATE
PLG
LUMIÈRE IMMATRICULATION ARRIÈRE GAUCHE
LEFT REAR LICENCE LIGHT
PLD
LUMIÈRE IMMATRICULATION ARRIÈRE DROIT
RIGHT REAR LICENCE LIGHT
710002220
15C1301e

Part List

COMMANDER 2013 STD, DPS, XT, X 1000 EFI / Electrical Harness Tail Gate, EUROPE

ITEM	PART NUMBER	PART NAME	QUANTITY	REMARKS
1	710002220	Tail Gate Harness Ass'y	1	EUR
PLD	515175231	Female Terminal	4	EUR
PLD	515175658	Female Housing, 2 Circuits	2	EUR
PLG	515175231	Female Terminal	4	EUR
PLG	515175658	Female Housing, 2 Circuits	2	EUR
TG	278000223	Female Terminal	2	EUR
TG	278000220	Male Connector, 2 Circuits	1	EUR
TG	278001065	Wire Seal	2	EUR

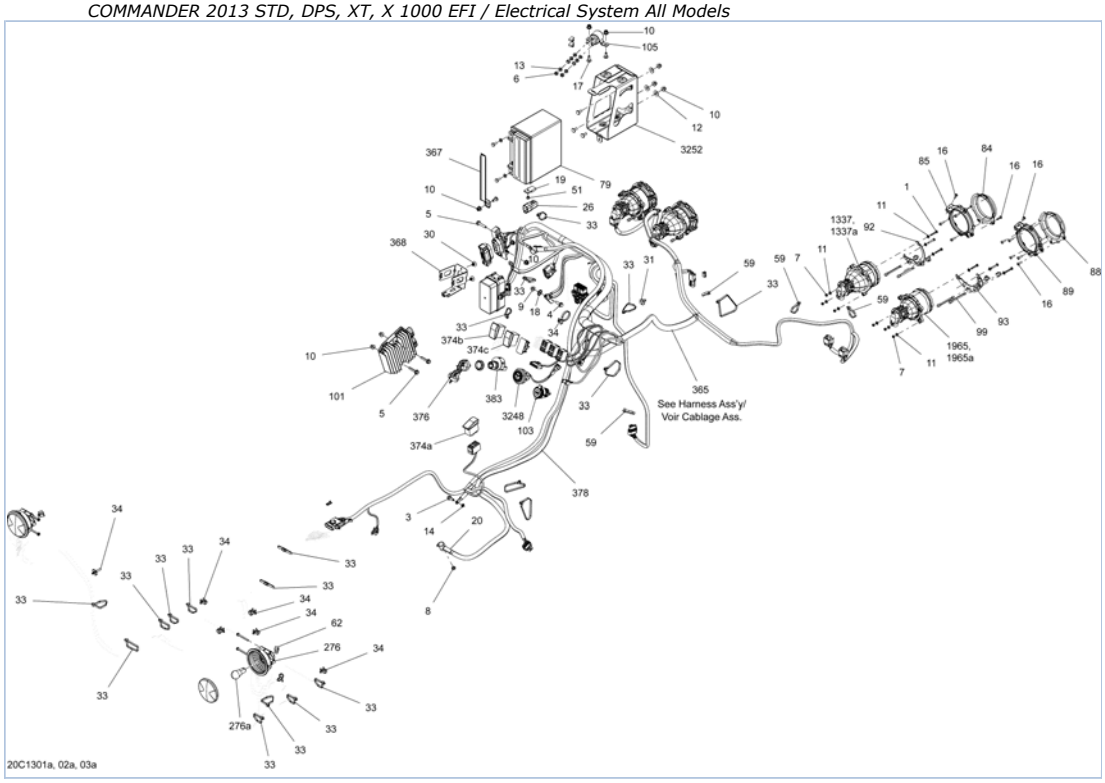
See Harness Ass'y/
Voir Cablage Ass.
20C1301a, 02a, 03a

Part List

COMMANDER 2013 STD, DPS, XT, X 1000 EFI / Electrical System All Models

ITEM	PART NUMBER	PART NAME	QUANTITY	REMARKS
1	207142544	HEX. SCREW M4 X 25	12	
3	207561644	Hex. Flanged Screw M6 X 16, Scotch Grip	1	
4	207662044	Hex. Flanged Screw M6 X 20	1	
5	207663044	Hex. Flanged Screw M6 X 30	1	
5	207663044	Hex. Flanged Screw M6 X 30	2	
6	232061600	Hex. Nut M6	2	
7	232541414	Elastic Stop Nut M4	12	
8	232561414	Elastic Stop Nut M6	1	
9	233061414	Hex. Flanged Nut M6	1	
10	233261414	Hex. Flanged Elastic Nut M6	10	
11	234051410	Flat Washer M5	24	
12	234062410	Flat Washer 6 mm	3	
13	234161601	Lock Washer Helical M6	2	
14	234461608	External Serrated Lock Washer 6 mm	1	
15	241154540	Hex. Screw K50 X 45	4	
16	250000084	Phillips Screw K40 X 16	22	
17	250000223	Torx Screw M6 X 16	1	
18	250200041	Lock Washer Serrated M6	1	
19	270000141	Clip	1	
26	278002704	Diagnostic Connector	2	
30	293150103	Pop Rivet 3/16"	2	
31	293730040	Mount Dart	1	
33	293750008	Tie-Rap 350 mm	AR	
34	293750009	Tie-Rap 173 mm	AR	
51	390402400	Pop Rivet 3/16"	1	
59	414115200	Tie-Rap 180 mm	AR	
62	414227300	Clip	2	
79	410301203	Battery Ass'y, 18 Amperes	1	
84	710001083	LH Low Front Housing	1	
84	710001081	RH Low Front Housing	1	
85	710001084	LH Low Rear Housing	1	
85	710001082	RH Low Rear Housing	1	
88	710001087	LH High Front Housing	1	
88	710001085	RH High Front Housing	1	
89	710001088	LH High Rear Housing	1	
89	710001086	RH High Rear Housing	1	
92	710001037	LH Low Light Support	1	
92	710001094	RH Low Light Support	1	
93	710001036	LH High Light Support	1	
93	710001115	RH High Light Support	1	
99	710001147	Setting Screw	8	
101	710001191	Voltage Regulator	1	
103	710001248	Outlet DC	1	
105	710001364	Starter Relay	1	
276	710001645	TAIL LIGHT	2	
276a	520000758	Bulb	1	
365	710002485	Harness Ass'y	1	
367	710001916	Battery Holder	1	
368	710001918	Fuse Holder	1	
374a	710002053	Switch	1	
374b	710001737	Switch	1	
374c	710002199	PPS Sport Switch	1	
376	710000817	Key, Electronic	1	
376	710002183	Key, Electronic	1	

378	710002146	POSITIVE CABLE	1	
383	710002327	Ignition Switch	1	
1337	710002524	Low Beam Ass'y	2	
1337a	415129249	Halogen Bulb	1	
1965	710002525	High Beam Ass'y	2	
1965a	415129249	Halogen Bulb	1	
3248	710002594	Engine START Button	1	
3252	710003129	Battery Support	1	

COMMANDER 2013 STD, DPS, XT, X 1000 EFI / Electrical System NA, INTER, EUR

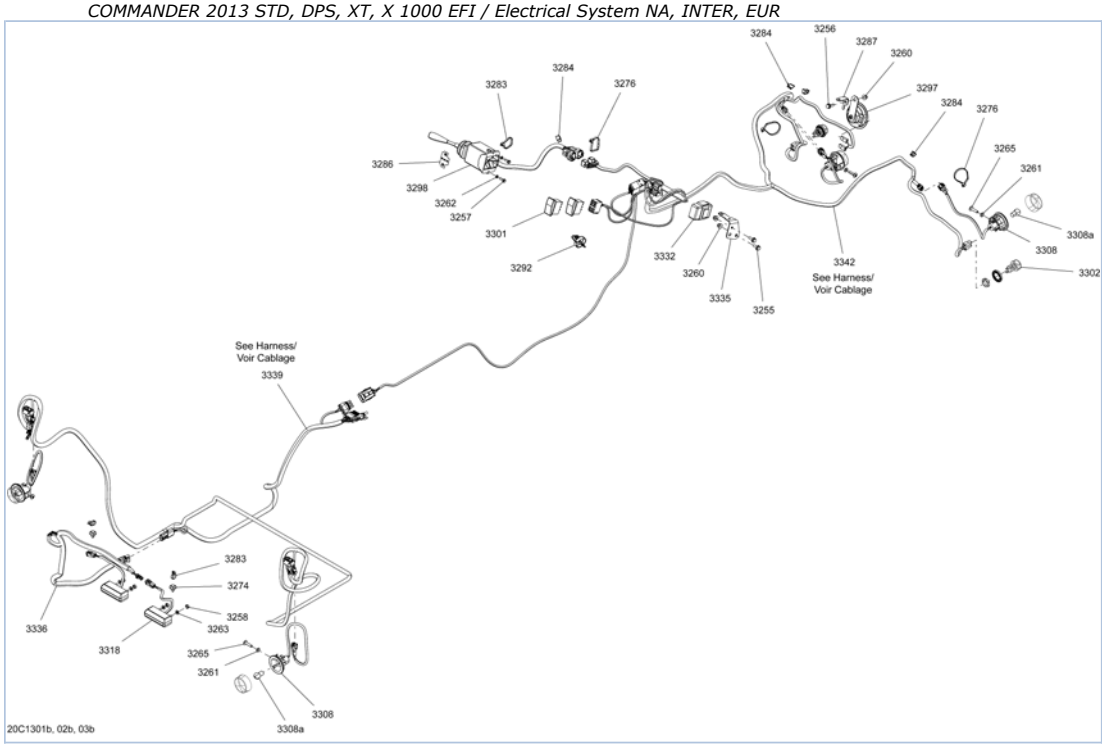

Part List

COMMANDER 2013 STD, DPS, XT, X 1000 EFI / Electrical System NA, INTER, EUR

ITEM	PART NUMBER	PART NAME	QUANTITY	REMARKS
3255	207661644	Hex. Flanged Screw M6 X 16	2	EUR
3256	207662044	Hex. Flanged Screw M6 X 20	1	EUR
3257	210251680	Hex. Forming Screw M5 X 16	2	EUR
3258	232061600	Hex. Nut M6	4	EUR
3260	233261414	Hex. Flanged Elastic Nut M6	3	EUR
3261	234061410	Flat Washer 6 mm	4	EUR
3262	234151401	LOCK WASHER 5 MM	2	EUR
3263	234161601	Lock Washer Helical M6	4	EUR
3265	250000284	Torx Screw M6 X 25	4	EUR
3274	293730040	Mount Dart	2	EUR
3276	293750008	Tie-Rap 350 mm	3	EUR
3283	414115200	Tie-Rap 180 mm	3	EUR
3284	414227300	Clip	4	EUR
3286	704902614	Fasher Decal	1	EUR
3287	709200284	Support	1	EUR
3292	710000817	Key, Electronic	1	EUR
3297	710000983	Horn	1	EUR
3298	710001721	Turn Signal	1	EUR
3301	710001725	Hi/Low Switch	1	North America, International
3301	710002076	Switch	1	EUR
3302	710001726	Day Light	2	EUR
3308	710002047	Flasher	4	EUR
3308a	XXX	Bulb	AR	EUR
3318	710002055	License Light	2	EUR
3332	710002393	FLASHER UNIT	1	EUR
3335	710002408	Support	1	EUR
3336	710002220	Rear Harness Ass'y	1	EUR
3339	710003219	REAR HARNESS	1	North America, International
3339	710003220	REAR HARNESS	1	EUR
3342	710003008	Harness Ass'y	1	EUR

COMMANDER 2013 STD, DPS, XT, X 1000 EFI / Electrical System STD, X, XT, DPS

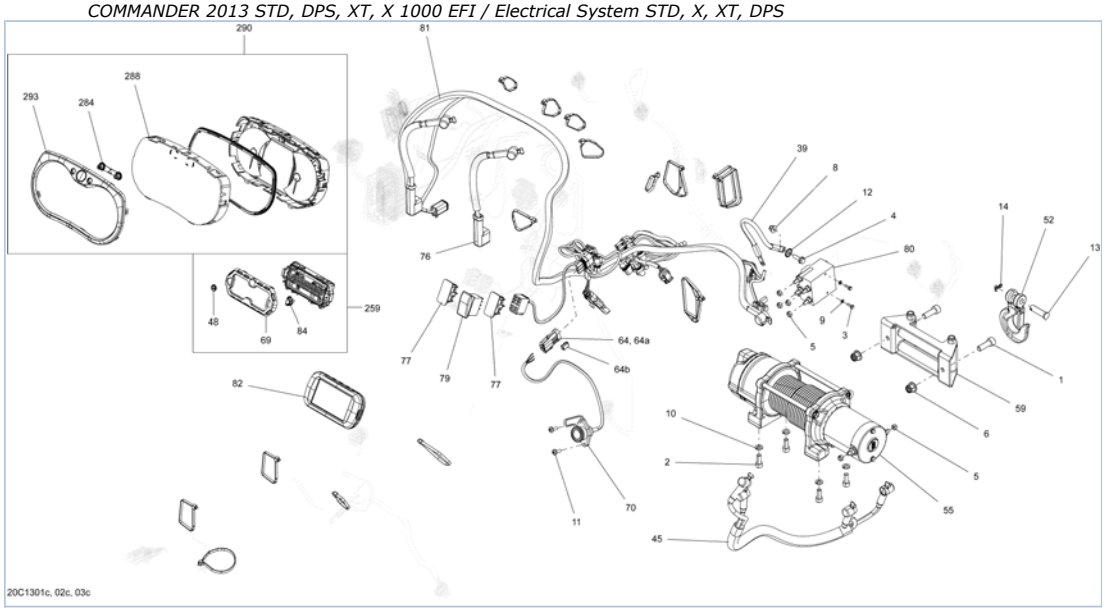

Part List

COMMANDER 2013 STD, DPS, XT, X 1000 EFI / Electrical System STD, X, XT, DPS

ITEM	PART NUMBER	PART NAME	QUANTITY	REMARKS
1	205003044	SOCKET SCREW M10 X 30	2	XT
2	205082044	Socket Head Screw M8 X 20	4	XT
3	207141044	Hex. Screw M4 X 10	2	XT
4	207662044	Hex. Flanged Screw M6 X 20	1	XT
5	232561434	Elastic Stop Nut M6	6	XT
6	233201414	Hex. Flanged Elastic Nut M10	2	XT
8	233261414	Hex. Flanged Elastic Nut M6	1	XT
9	234141601	Lock Washer 4 mm	2	XT
10	234181401	Lock Washer 8 mm	4	XT
11	250000146	Truss Head Torx Screw K50 X 16	2	XT
12	250200041	Lock Washer Serrated M6	1	XT
13	250400021	clevis pin	1	XT
14	250400022	Cotter Pin	1	XT
39	710002214	Negative Cable	1	XT
45	710002216	Electrical Winch Cable	1	XT
48	704901270	BRP Logo, 13 mm	1	STD
48	704901270	BRP Logo, 13 mm	1	DPS
52	705002329	HOOK	1	XT
55	705003944	Winch	1	XT
59	705004228	Winch Cable Guide	1	XT
64	710001059	CONNECTOR ASS'Y	1	XT
64a	278000281	Female Terminal Housing, 3 Circuits	1	XT
64b	710000992	Clip	1	XT
69	710001183	Trim Ring Ass'y	1	STD
69	710001183	Trim Ring Ass'y	1	DPS
70	710001023	Winch Connector	1	XT
76	710002148	POSITIVE CABLE	1	STD, X, DPS
77	710001999	Plug Carling	3	STD
77	710001999	Plug Carling	3	X
77	710001999	Plug Carling	3	DPS
79	710002052	Switch	1	XT
80	710002112	Solenoid	1	XT
81	710002159	POSITIVE CABLE	1	XT
82	N/A	Not available for this vehicle	-	
84	710001473	Button	1	STD
84	710001473	Button	1	DPS
259	710003288	Calibrated Speedometer	1	STD
259	710003288	Calibrated Speedometer	1	DPS
284	415129355	Speedometer Button	1	XT
284	415129355	Speedometer Button	1	X
288	415129349	Lens	1	XT
288	415129349	Lens	1	X
290	710003290	Calibrated Speedometer	1	XT
290	710003292	Calibrated Speedometer	1	X
293	415129348	Gauge Ring	1	XT
293	415129348	Gauge Ring	1	X

1000

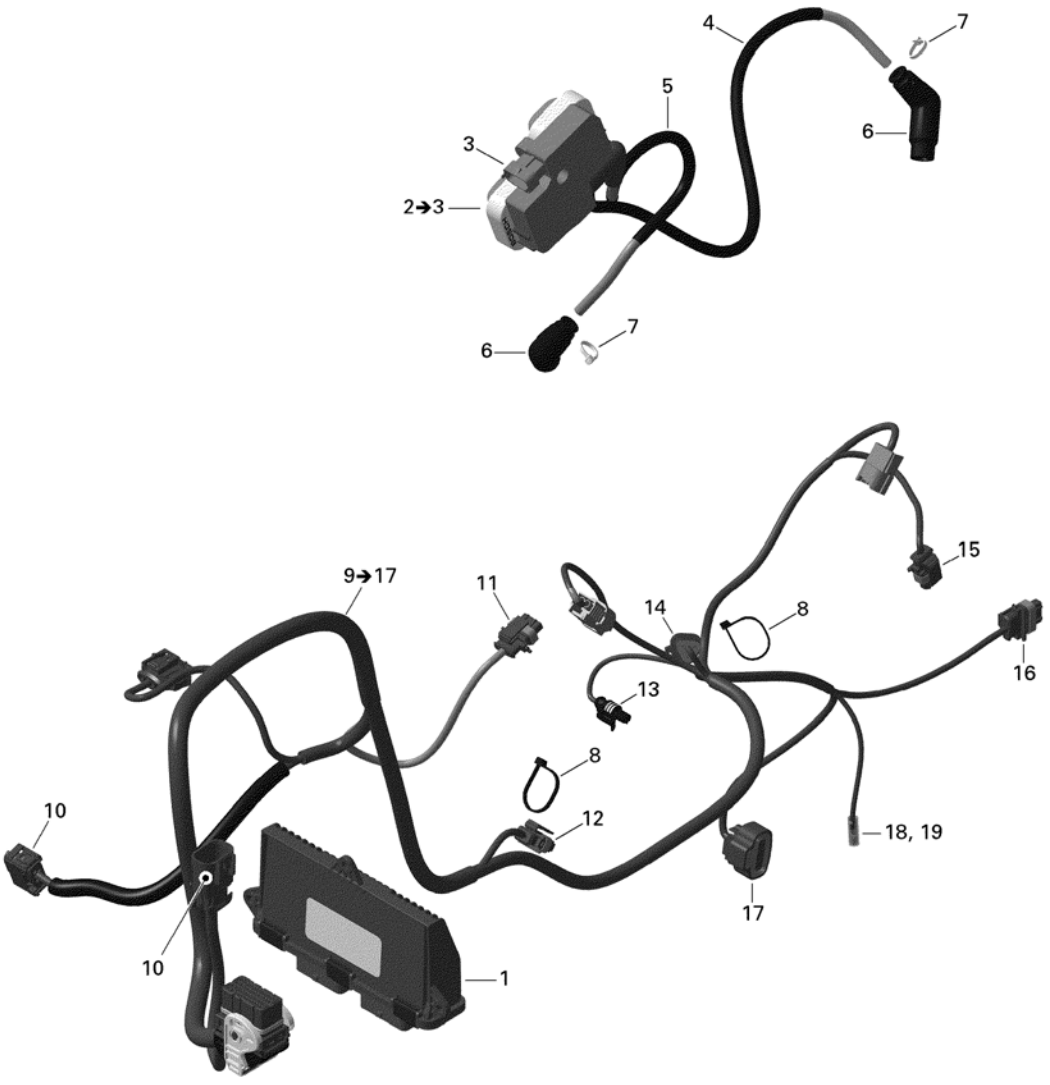

Part List

COMMANDER 2013 STD, DPS, XT, X 1000 EFI / Engine Harness And Electronic Module

ITEM	PART NUMBER	PART NAME	QUANTITY	REMARKS
1	420266956	ECM Connector	1	Except Europe
1	420266957	ECM Connector	1	Europe
2	278001546	Ignition Coil	1	
3	710000568	Housing	1	
4	420665330	Spark Plug Cable, 610 mm, PTO Side	1	
5	420664300	Spark Plug Cable, 365 mm, MAG Side	1	
6	420265248	Spark Plug Connector	2	
7	420866710	Tie Rap	2	
8	420866714	Tie Rap	1	
9	420666332	Engine Wiring Harness	1	Includes 9 to 17
10	710001872	Housing, 6 Positions	1	
11	278000997	Male Housing, 3 Circuits	1	
12	278001005	Male Housing, 2 Circuits	1	
13	278001012	Male Housing, 1 Circuit	1	
14	409207000	Male Housing, 3 Circuits	1	
15	278001005	Male Housing, 2 Circuits	1	
16	278000997	Male Housing, 3 Circuits	1	
17	710000329	Male Housing, 4 Circuits	1	
18	278001009	Female Terminal	1	
19	278001007	Insulated Sheath	1	

The illustrations figuring in this parts catalog show typical construction of the different assemblies and, in all cases, may not reproduce the full detail or exact shape of the parts shown. However, they represent parts which have the same or similar function.

Les illustrations contenues dans ce catalogue indiquent la disposition des pièces les unes par rapport aux autres. Il est donc possible qu'elles ne rendent pas compte de la forme exacte de ces pièces ainsi que de leurs détails de fabrication. Ces illustrations ont pour but d'identifier des pièces qui remplissent la même fonction ou une fonction identique.

SYMBOLS USED IN THIS CATALOG

@	In «Quantity» column means «Use as Required».
Opt	In «Quantity» column means «Optional».
XXX	Parts marked with «XXX» are not available as spare parts.

SYMBOLES UTILISÉS DANS CE CATALOGUE

@	Dans la colonne «Quantité» signifie «Au besoin».
Opt	Dans la colonne «Quantité» signifie «En option».
XXX	Les articles marqués d'un «XXX» ne sont pas disponibles comme pièces de remplacement.

Part List

COMMANDER 2013 LTD 1000 / Model Numbers

ITEM	PART NUMBER	PART NAME	QUANTITY	REMARKS
1	6GDA	Commander, 4X4 LTD, Hybrid White		North America 1000 EFI
2	6GDB	Commander, 4X4 LTD, Hybrid White		International 1000 EFI
3	6GDD	Commander, 4X4 LTD, Magnesium		North America 1000 EFI

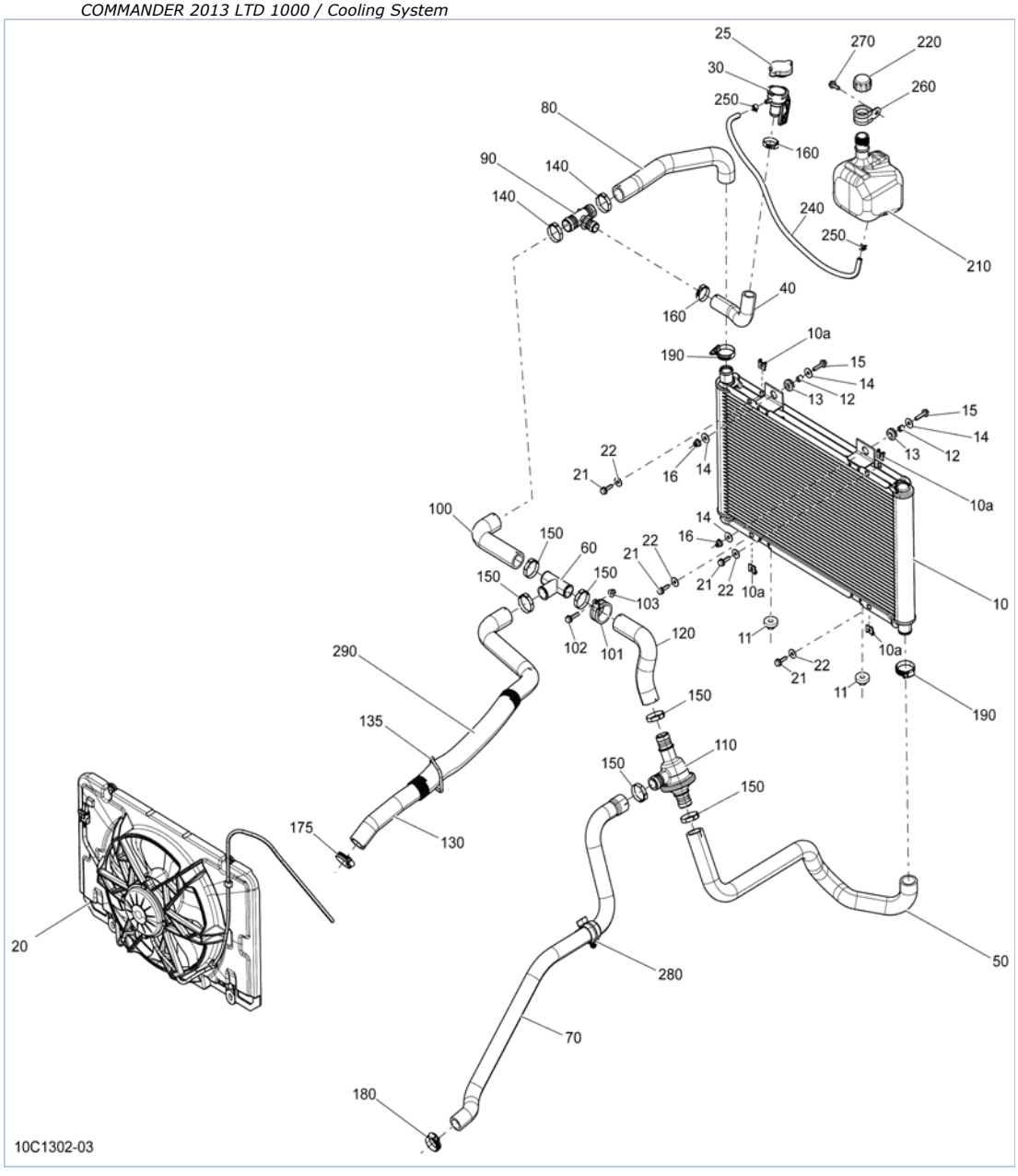
25
270
220
30
260
250
80
160
90
140
240
140
250
210
40
160
10a
190
15
14
13
12
15
14
13
12
22
21
16
14
10a
100
14
150
60
16
22
21
150
21
22
10a
150
103
10
11
102
101
120
10a
290
22
21
11
150
190
135
110
150
150
175
130
20
50
280
70
180
10C1302-03

Part List

COMMANDER 2013 LTD 1000 / Cooling System

ITEM	PART NUMBER	PART NAME	QUANTITY	REMARKS
10	709200395	Radiator	1	Includes 10 to 10a
10a	715900148	Clip Nut M6 X 1	4	
11	709200285	Grommet	2	
12	293900105	Bushing	2	
13	293720053	Grommet	2	
14	250200082	Flat Washer	4	
15	207662534	Hex. Flanged Screw	2	
16	233261434	Flanged Elastic Nut M6	2	
20	709200375	Fan Ass'y	1	
21	207662044	Hex. Flanged Screw M6 X 20	4	
22	234062410	Flat Washer 6 mm	4	
25	709200207	Pressure Cap	1	
30	709200179	FILLER NECK	1	
40	709200264	FILLER NECK HOSE	1	
50	709200378	Radiator Inlet Hose	1	
60	509000219	T-Fitting	1	
70	709200379	Pump Hose	1	
80	709200265	Radiator Outlet Hose	1	
90	509000372	T-Fitting	1	
100	709200380	Intermediate Hose	1	
101	293650218	Hose Retainer	1	
102	207662534	Hex. Flanged Screw	1	
103	233261434	Flanged Elastic Nut M6	1	
110	709200406	Thermostat	1	
120	709200381	Recirculation Hose	1	
130	709200382	Intermediate Hose	1	
135	293750008	Tie-Rap 350 mm	1	
140	509000162	Gear Clamp	2	
150	509000162	Gear Clamp	6	
160	293650099	Oetiker Gear Clamp	2	
175	293650098	Norma Gear Clamp	1	
180	293650098	Norma Gear Clamp	1	
190	293650098	Norma Gear Clamp	2	
210	709200312	Coolant Tank	1	
220	709200328	Tank Cap	1	
240	415110000	Polyurethane Hose 5.2 mm	1	
250	414554800	Spring Clamp	2	
260	709200036	HOSE ANCHOR	1	
270	207661644	Hex. Flanged Screw M6 X 16	1	
280	275500590	Retainer	1	
290	515176260	Tubing 35mm	1	

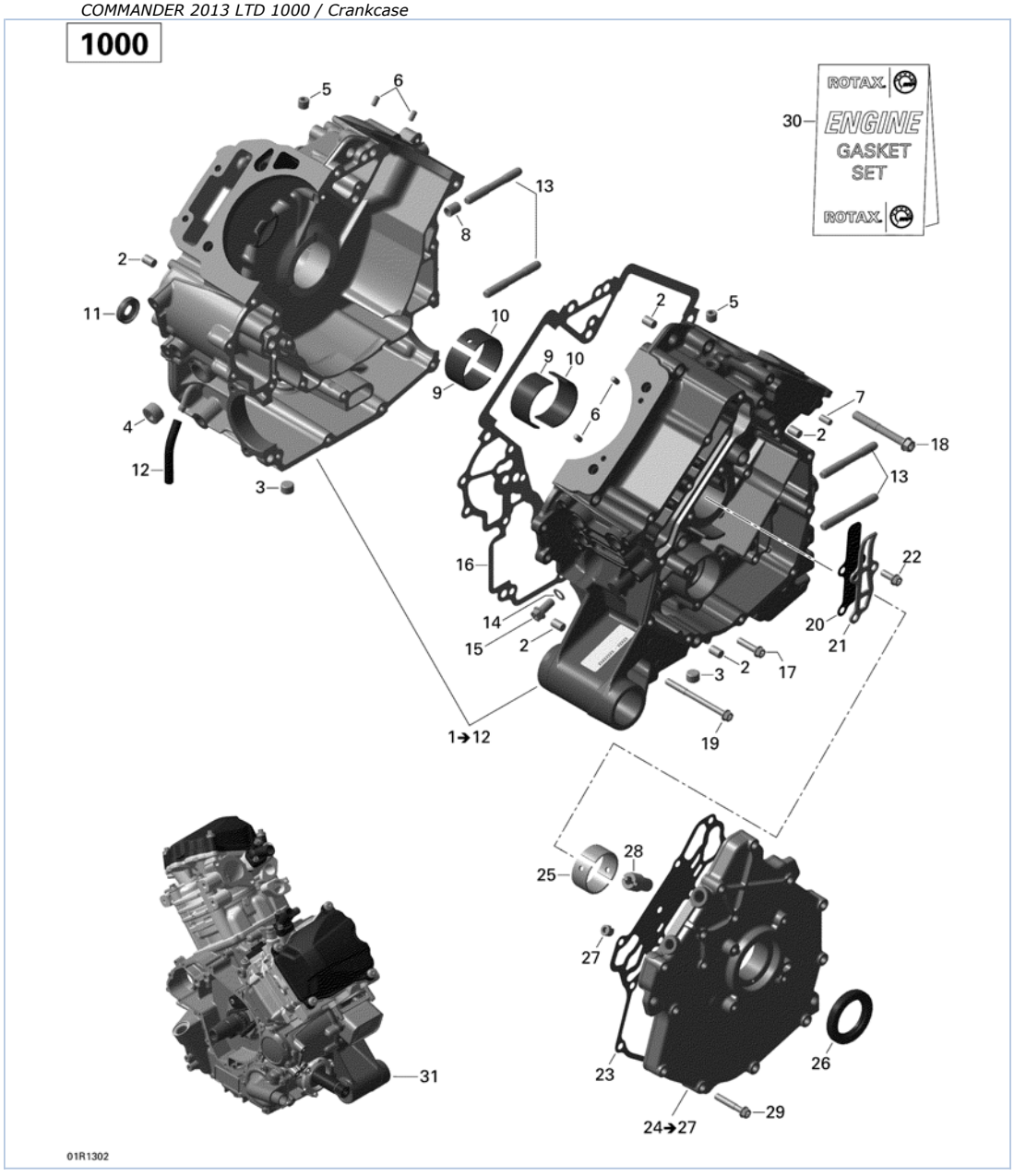
1000
ROTAX
ENGINE
GASKET
SET
ROTAX
30
5
6
13
8
2
11
10
9
4
12
3
2
5
9
10
6
7
2
18
13
16
22
14
15
2
20
21
3
2
17
19
1→12
28
25
27
31
23
26
24→27
29
01R1302

Part List

COMMANDER 2013 LTD 1000 / Crankcase

ITEM	PART NUMBER	PART NAME	QUANTITY	REMARKS
1	420685253	Crankcase Ass'y	1	Includes 1 to 12
2	420632010	Center Pin 8 X 12	5	
3	420840657	Plug Screw M12 X 1.5	2	
4	420240170	Plug Screw M18 X 1.5	1	
5	420641323	Plug Screw M10 X 1	2	
6	420929650	Drive Pin 5 X 10	4	
7	420932780	Needle Pin	1	
8	420929670	Dowel Pin 10 X 13	1	
9	420233960	Plain Bearing	2	
10	420233965	Plain Bearing	2	
11	420650310	Oil Seal	1	
12	415110000	Polyurethane Hose 5.2 mm	1	
13	420240814	Stud	4	
14	420950141	Sealing Ring	1	
15	420440852	Flanged Torx Screw M8 X 16	1	
16	420651225	Gasket	1	
17	420641238	Flanged Torx Screw M6 X 25	2	
18	420440402	Flanged Torx Screw M8 X 65	4	
19	420440657	Flanged Torx Screw M6 X 75	13	
20	420224720	Valve Plate	1	
21	420224725	Reed Valve Stop	1	
22	420641048	Flanged Torx Screw M6 X 16	3	
23	420651211	Gasket	1	
24	420612128	PTO Cover Ass'y	1	Includes 24 to 27
25	420233997	Bearing Sleeve	2	
26	420631932	Oil Seal	1	
27	420641323	Plug Screw M10 X 1	1	
28	420256334	Hose Nipple M12 X 1.5	1	
29	420641258	Flanged Torx Screw M6 X 35	14	
30	420684150	Gasket Kit, Engine	1	
31	420101002	Long Block, 1000	1	

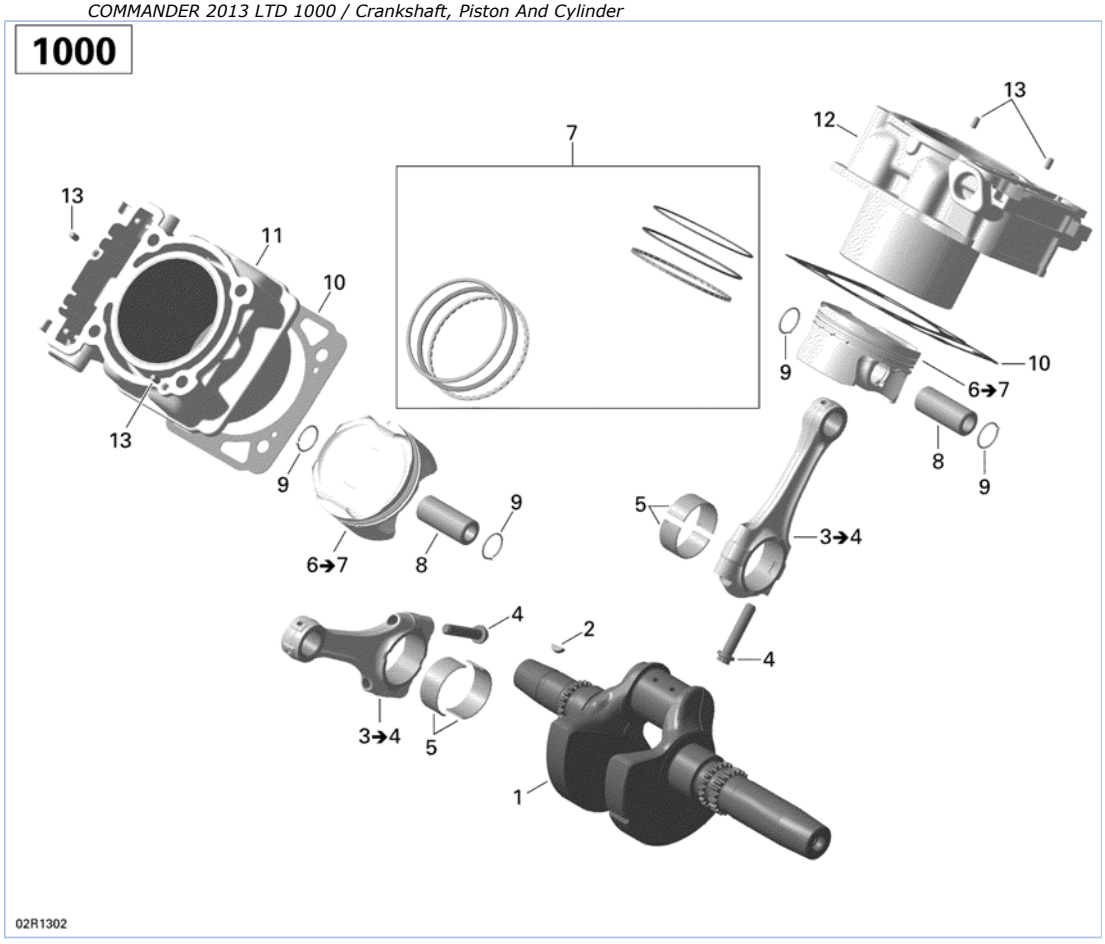
1000
13
12
7
13
11
10
9
10
13
6➔7
9
8
9
9
5
3➔4
6➔7
8
9
4
2
4
3➔4
5
1
02R1302

Part List

COMMANDER 2013 LTD 1000 / Crankshaft, Piston And Cylinder

ITEM	PART NUMBER	PART NAME	QUANTITY	REMARKS
1	420219735	Crankshaft	1	
2	420246570	Woodruff Key 4 X 5	1	
3	420217556	Connecting Rod Ass'y	2	Includes 3 to 4
4	420641477	Connecting Rod Screw M9 X 1/45	4	
5	420233726	Plain Bearing	4	
6	420685242	Piston Ass'y, 90.955 mm	2	Includes 6 to 7
7	420685244	Piston Ring Set	2	
8	420216351	Piston Pin	2	
9	420245436	Piston Circlip	4	
10	420630210	Gasket	2	
11	420623566	Cylinder With Sleeve, Front	1	
12	420623568	Cylinder With Sleeve, Rear	1	
13	420929650	Drive Pin 5 X 10	4	

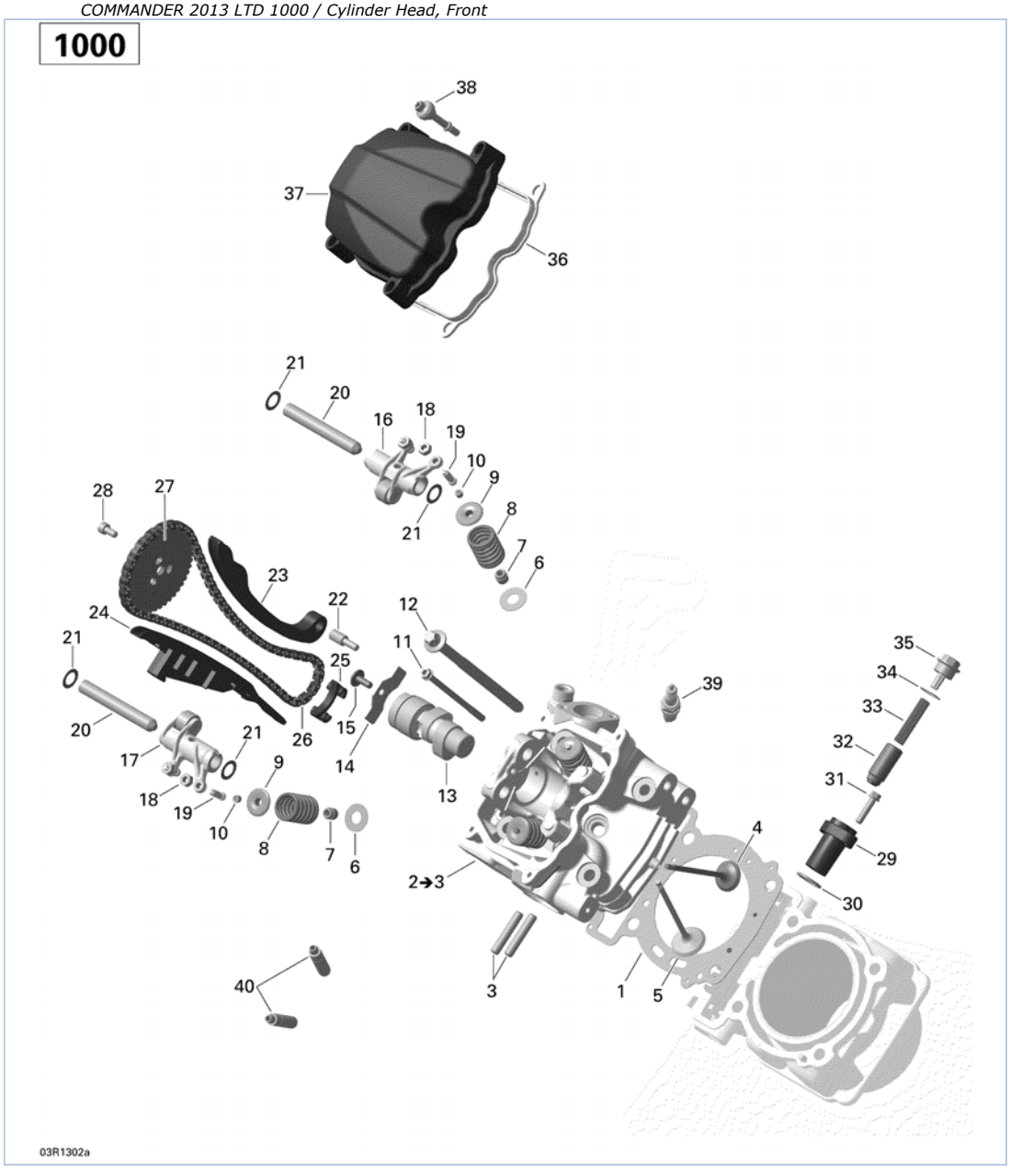
1000
38
37
36
21
20
16
18
19
10
9
8
7
6
28
27
23
22
24
12
11
25
15
14
13
26
17
18
19
10
9
8
7
6
2→3
3
1
5
4
39
35
34
33
32
31
29
30
40
03R1302a

Part List

COMMANDER 2013 LTD 1000 / Cylinder Head, Front

ITEM	PART NUMBER	PART NAME	QUANTITY	REMARKS
1	420630195	Cylinder Head Gasket	1	
2	420623064	Cylinder Front Ass'y	1	Includes 2 to 3
3	420941014	Stud M8 x 26	2	
4	420254361	Exhaust Valve, 27 mm	2	
5	420254351	Intake Valve, 31 mm	2	
6	420627770	Thrust Washer	4	
7	420230515	Valve Stem Seal	4	
8	420239295	Valve Spring	4	
9	420254132	Valve Spring Retainer	4	
10	420254120	Cotter Valve	8	
11	420440612	Flanged Torx Screw M6 X 105	2	
12	420441284	Torx Screw M10 X 159	4	
13	420620865	Camshaft	1	
14	420627743	Holding Strip	1	
15	420241525	Torx Screw M6 X 16	1	
16	420254905	Rocker Arm Inlet	1	
17	420254915	Rocker Arm Exhaust	1	
18	420242910	Hex. Nut M6	4	
19	420241335	Adjustment Screw M6 X 0.75	4	
20	420229712	Pin #12, Small, M6 X 90	2	
21	420944382	Shim	4	
22	420240941	Bearing Screw M6	1	
23	420436017	Chain Tension Guide	1	
24	420236583	Chain Guide	1	
25	420236350	Chain Guide	1	
26	420297067	Silent Chain	1	
27	420254435	Camshaft Sprocket, 42 Teeth	1	
28	420840031	Screw M6 X 12	3	
29	420236510	Chain Tensioner Housing	1	
30	420430370	O-Ring	1	
31	420641238	Flanged Torx Screw M6 X 25	2	
32	420236520	Chain Tensioner Plunger	1	
33	420238120	Spring	1	
34	420250890	O-Ring	1	
35	420641150	Plug Screw	1	
36	420630260	Gasket	1	
37	420610395	Valve Cover	1	
38	420440560	Torx Screw M6 X 30.5	4	
39	707000246	Spark Plug, NGK DCP-R8E	1	
40	420254374	Valve Guide	4	

1000

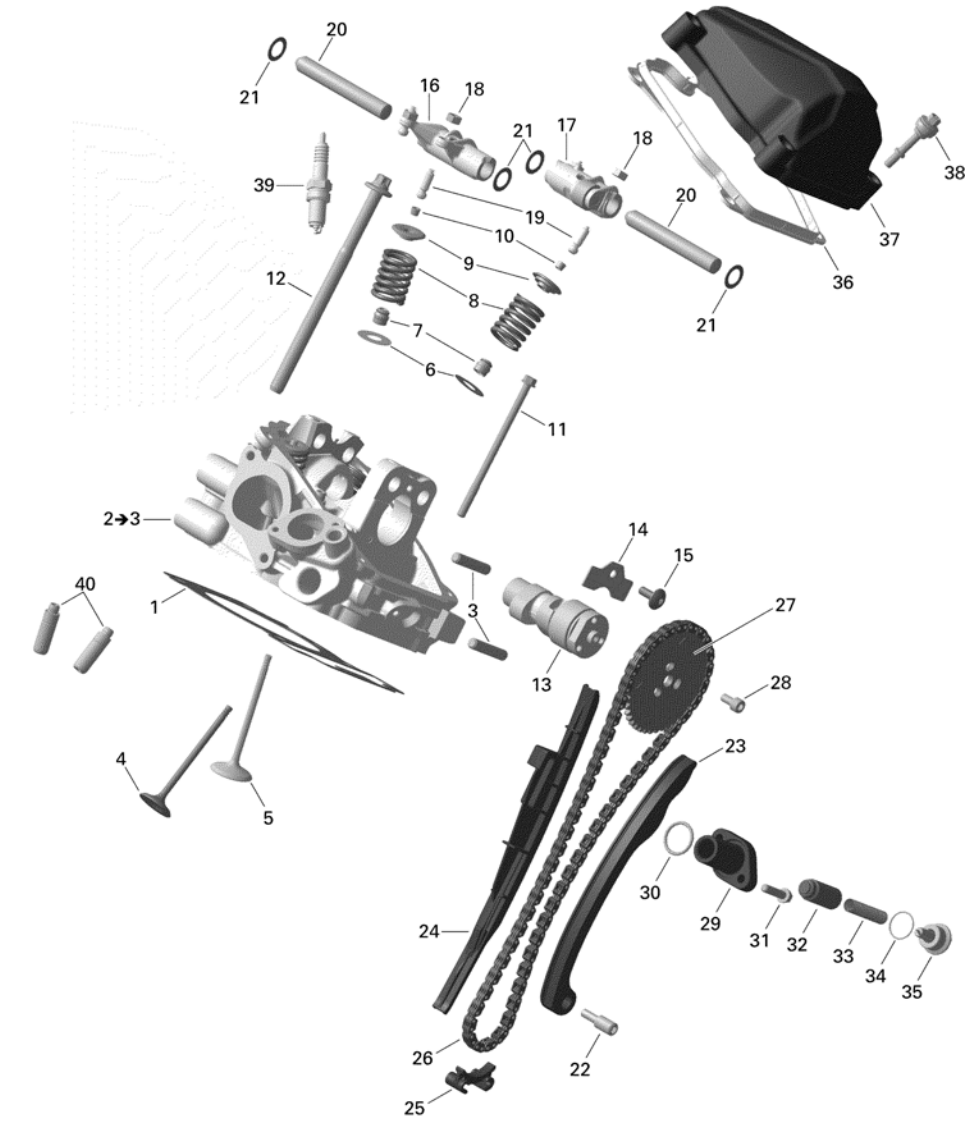
20
21
16
18
21
17
18
38
39
19
20
37
10
9
36
12
8
21
7
6
11
2➔3
14
15
40
1
3
27
13
28
4
23
5
30
29
31
32
33
34
35
24
26
22
25
03R1302b

Part List

COMMANDER 2013 LTD 1000 / Cylinder Head, Rear

ITEM	PART NUMBER	PART NAME	QUANTITY	REMARKS
1	420630195	Cylinder Head Gasket	1	
2	420623064	Cylinder Front Ass'y	1	Includes 2 to 3
3	420941014	Stud M8 x 26	2	
4	420254361	Exhaust Valve, 27 mm	2	
5	420254351	Intake Valve, 31 mm	2	
6	420627770	Thrust Washer	4	
7	420230515	Valve Stem Seal	4	
8	420239295	Valve Spring	4	
9	420254132	Valve Spring Retainer	4	
10	420254120	Cotter Valve	8	
11	420440612	Flanged Torx Screw M6 X 105	2	
12	420441284	Torx Screw M10 X 159	4	
13	420620862	Camshaft	1	
14	420627743	Holding Strip	1	
15	420241525	Torx Screw M6 X 16	1	
16	420254905	Rocker Arm Inlet	1	
17	420254915	Rocker Arm Exhaust	1	
18	420242910	Hex. Nut M6	4	
19	420241335	Adjustment Screw M6 X 0.75	4	
20	420229712	Pin #12, Small, M6 X 90	2	
21	420944382	Shim	4	
22	420240941	Bearing Screw M6	1	
23	420436017	Chain Tension Guide	1	
24	420236583	Chain Guide	1	
25	420236350	Chain Guide	1	
26	420297067	Silent Chain	1	
27	420254435	Camshaft Sprocket, 42 Teeth	1	
28	420840031	Screw M6 X 12	3	
29	420236510	Chain Tensioner Housing	1	
30	420430370	O-Ring	1	
31	420641238	Flanged Torx Screw M6 X 25	2	
32	420236520	Chain Tensioner Plunger	1	
33	420238120	Spring	1	
34	420250890	O-Ring	1	
35	420641150	Plug Screw	1	
36	420630260	Gasket	1	
37	420610395	Valve Cover	1	
38	420440560	Torx Screw M6 X 30.5	4	
39	707000246	Spark Plug, NGK DCP-R8E	1	
40	420254374	Valve Guide	4	

COMMANDER 2013 LTD 1000 / Engine

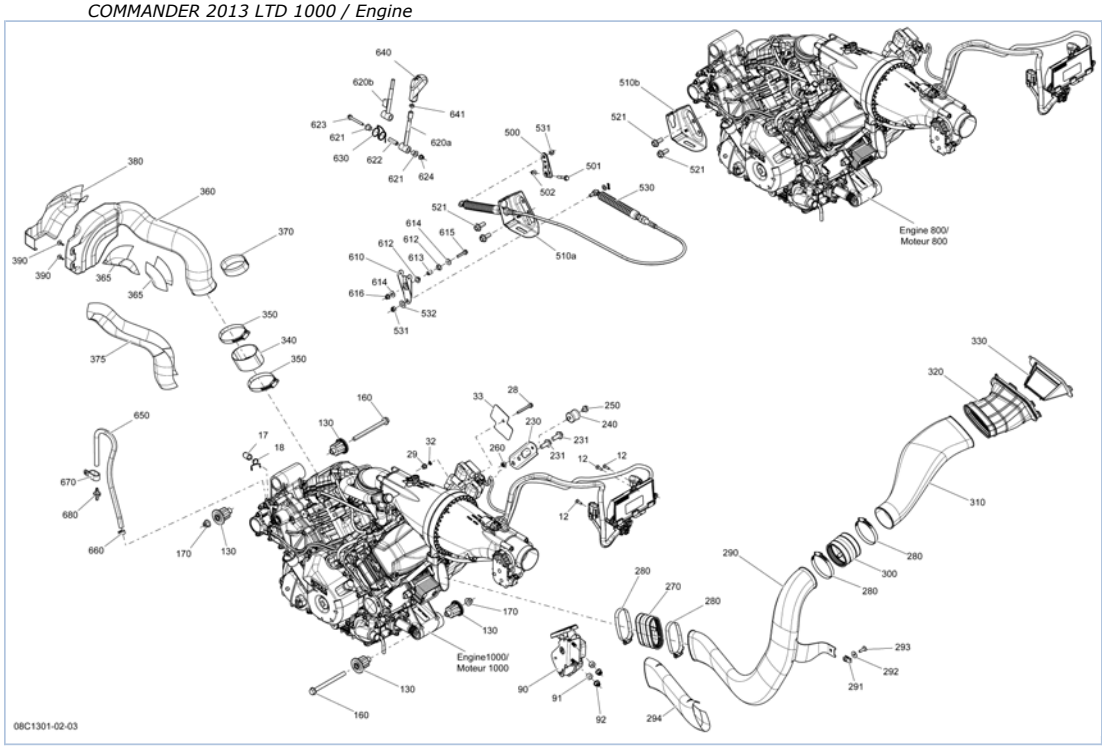

Part List

COMMANDER 2013 LTD 1000 / Engine

ITEM	PART NUMBER	PART NAME	QUANTITY	REMARKS
12	250000146	Truss Head Torx Screw K50 X 16	3	
17	707001185	Plug	1	
18	707800506	RETAINER CLIP	1	
28	207665044	Hex. Flanged Screw M6 X 50	1	
29	233261414	Hex. Flanged Elastic Nut M6	1	
32	234461608	External Serrated Lock Washer 6 mm	1	
33	710000073	INSULATOR PAD	1	
90	707001166	Accelerator Pedal	1	
91	707000848	Bushing	2	
92	233281414	Hex. Flanged Elastic Nut M8	2	
130	707000426	ANTI-VIBRATION MOUNT	4	
160	230602546	Hex. Flanged Screw M10 X 125	2	
170	233201436	Flanged Elastic Nut	2	
230	707000707	Upper Engine Bracket	1	
231	207602544	HEX. FLANGED SCREW M10 X 25	2	
240	707000949	RUBBER ISOLATOR	1	
250	207581046	Flanged Screw M8 x 10, Scotch Grip	1	
260	232581414	Hex. Elastic Stop Nut M8	1	
270	707001043	Flexible Adaptor	1	
280	293650091	Norma Clamp	4	
290	707000639	Air Inlet	1	
291	250000048	Pannel Nut M6 X 1.0	1	
292	250200082	Flat Washer	1	
293	250000128	Torx Truss Screw M6 X 20	1	
294	707000924	Reflective Sheet	1	
300	707001043	Flexible Adaptor	1	
310	707000909	Primary Air Intake	1	
320	707000908	Adaptor	1	
330	707000873	CVT Filter	1	
340	707000789	Adaptor	1	
350	293650118	Norma Gear Clamp	2	
360	707000640	CVT Air Outlet	1	
365	707000991	Reflective Sheet	2	
370	707000988	Reflective Sheet	1	
375	707000989	Reflective Sheet	1	
380	707000990	Reflective Sheet	1	
390	250000113	Screw M4 X 16, Type K-40	2	
500	707000911	Lever	1	
501	207663544	Hex. Flanged Screw M6 X 35	1	
502	233261414	Hex. Flanged Elastic Nut M6	1	
510a	707000919	CABLE SUPPORT	1	
510b	707000921	CABLE SUPPORT	1	
521	207602544	HEX. FLANGED SCREW M10 X 25	2	
530	707000775	Shifting Cable	1	
531	232581414	Hex. Elastic Stop Nut M8	2	
532	234001410	Flat Washer 10 mm	1	
610	707000828	Lower Lever Arm	1	
612	707000847	Flanged Bushing	2	
613	707000801	Bushing	1	
614	234062410	Flat Washer 6 mm	2	
615	207663044	Hex. Flanged Screw M6 X 30	1	

616	233261414	Hex. Flanged Elastic Nut M6	1	
620a	707000711	Upper Lever Arm	1	
620b	N/A	Not available for this vehicle	1	
621	707000869	Flanged Bushing	2	
622	707000868	Bushing	1	
623	207665044	Hex. Flanged Screw M6 X 50	1	
624	233261414	Hex. Flanged Elastic Nut M6	1	
630	707000750	Lever Arm Spring	1	
640	707000284	LEVER HANDLE	1	
641	232180491	HEX. JAM NUT M8	1	
650	415079800	Hose 1/4"	1	
660	414415200	Universal Spring Clamp	1	
670	709000057	Open Clamp	1	
680	275500398	Check Valve	1	

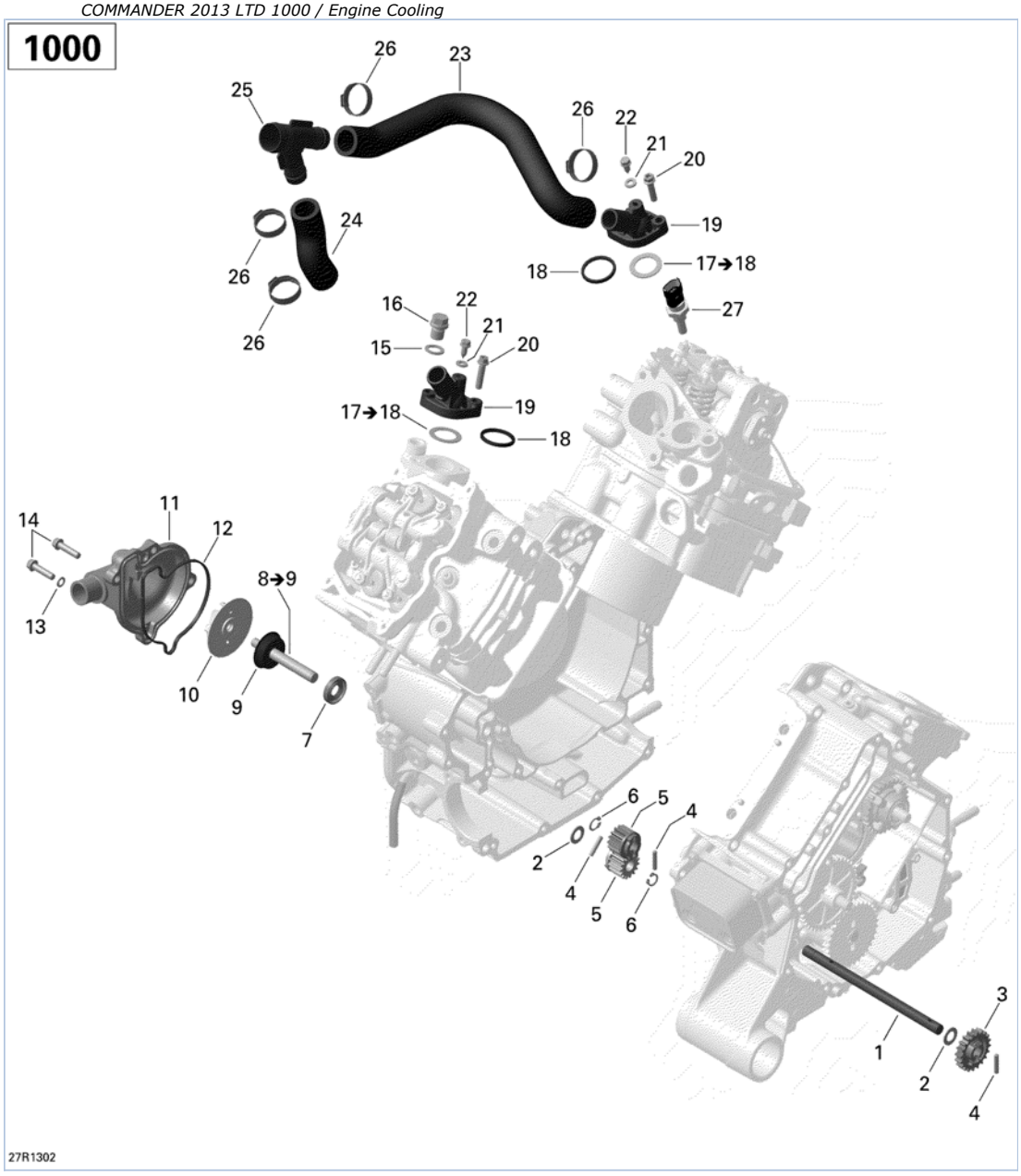
1000
26
23
25
26
22
21
20
19
24
26
18
17➔18
27
26
16
22
21
15
20
17➔18
19
18
14
11
12
8➔9
13
10
9
7
6
5
4
2
4
5
6
3
1
2
4
27R1302

Part List

COMMANDER 2013 LTD 1000 / Engine Cooling

ITEM	PART NUMBER	PART NAME	QUANTITY	REMARKS
1	420620500	Intermediate Shaft	1	
2	420827590	Thrust Washer	2	
3	420434330	Water Pump Gear	1	
4	420232420	Needle Pin	3	
5	420234627	Pump Gear, 15 Teeth	2	
6	420245330	Snap Ring	2	
7	420650310	Oil Seal	1	
8	420620175	Water Pump Shaft Ass'y	1	Includes 8 to 9
9	420650370	Rotary Seal	1	
10	420222505	Water Impeller	1	
11	420222785	Water Pump Housing	1	
12	420651190	Gasket	1	
13	420230415	Seal Washer	1	
14	420641238	Flanged Torx Screw M6 X 25	4	
15	420250640	Copper Washer	1	
16	420841921	Plug Screw M12 X 1.5	1	
17	420927837	Spacer Ass'y	2	Includes 17 to 18
18	420650300	Thermostat Gasket	2	
19	420222690	Thermostat Cover	2	
20	420641238	Flanged Torx Screw M6 X 25	4	
21	420650255	Gasket Ring	2	
22	420441621	SCREW M5 X 16	2	
23	420822690	Rear Head Hose	1	
24	420822695	Front Head Hose	1	
25	709200273	Y-Fitting	1	
26	420251578	Clamp	4	
27	278001016	Temperature Sensor	1	

1000

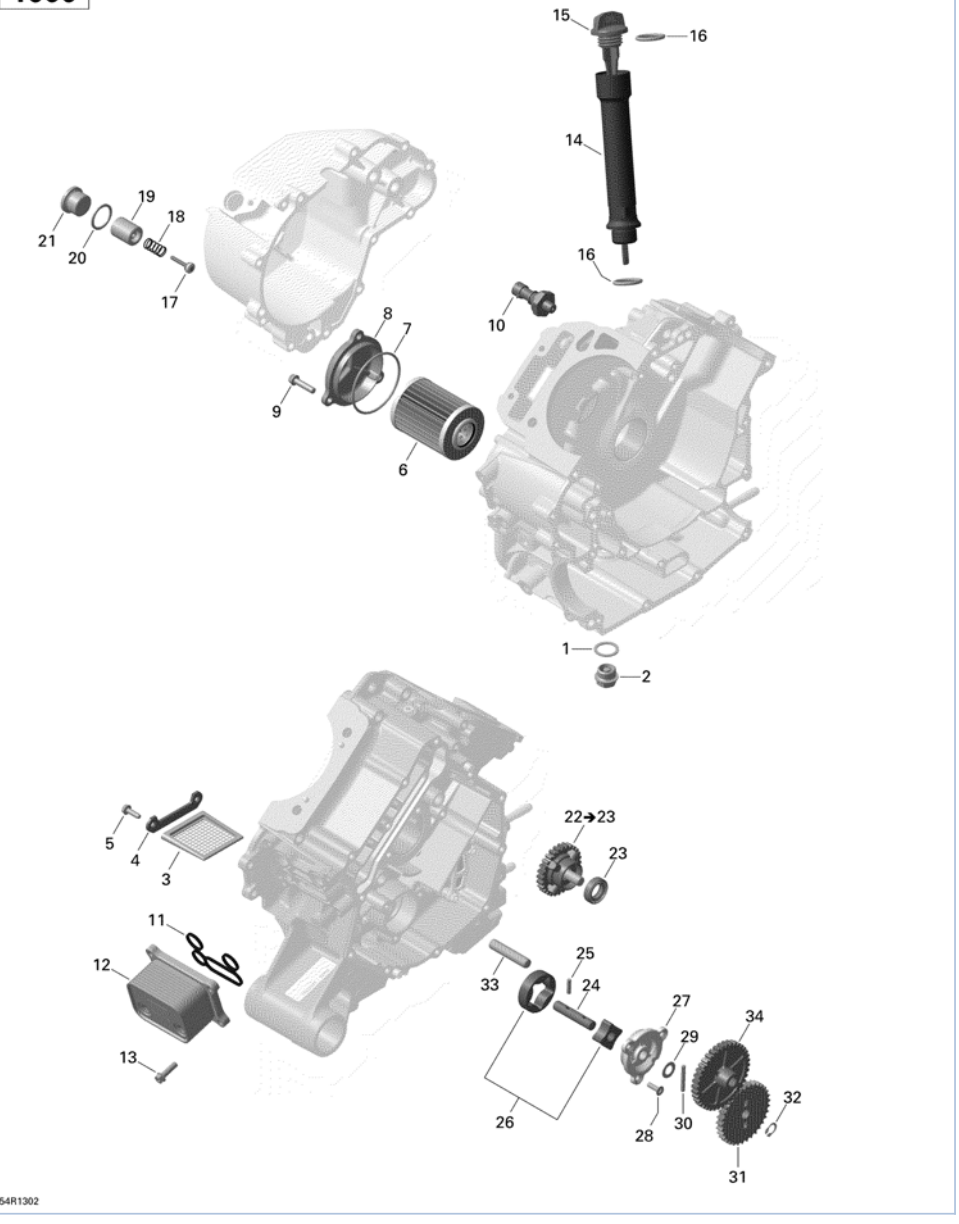
15
16
14
16
19
18
21
20
17
10
8
7
9
6
1
2
5
4
3
22→23
23
11
12
13
33
25
24
27
29
34
26
28
30
32
31
54R1302

Part List

COMMANDER 2013 LTD 1000 / Engine Lubrication

ITEM	PART NUMBER	PART NAME	QUANTITY	REMARKS
1	420552280	O-Ring	1	
2	420840277	DRAIN PLUG M18 X 1.5	1	
3	420256321	Oil Sieve	1	
4	420612070	Cover Sieve	1	
5	420941925	Tapping Screw M5 X 16	2	
6	420256188	Oil Filter	1	
7	420230920	O-Ring	1	
8	420210418	Oil Filter Cover	1	
9	420641238	Flanged Torx Screw M6 X 25	3	
10	420256915	Oil Pressure Switch	1	
11	420430325	Oil Seal	1	
12	420890180	Oil Radiator	1	
13	420641048	Flanged Torx Screw M6 X 16	4	
14	420856922	Oil Lever Tube	1	
15	420856810	Oil Dipstick	1	
16	420631640	O-Ring	2	
17	420656370	Pressure Relief Valve	1	
18	420939485	Compression Spring	1	
19	420256486	Housing Valve	1	
20	420650465	Gasket Ring	1	
21	420640270	Screw Plug	1	
22	420434307	Idle Gear Ass'y, 28 Teeth	1	Includes 22 to 23
23	420430555	Oil Seal	1	
24	420237059	Oil Pump Shaft	1	
25	420232730	Needle Pin	1	
26	420256348	Oil Pump Rotor	1	
27	420210641	Oil Pump Cover	1	
28	420640821	Torx Screw M5 X 16	3	
29	420827590	Thrust Washer	1	
30	420232430	Needle Pin	1	
31	420434320	Oil Pump Gear, 33 Teeth	1	
32	420245330	Snap Ring	1	
33	420229302	Location Pin	1	
34	420434300	Idle Gear, 38 Teeth	1	

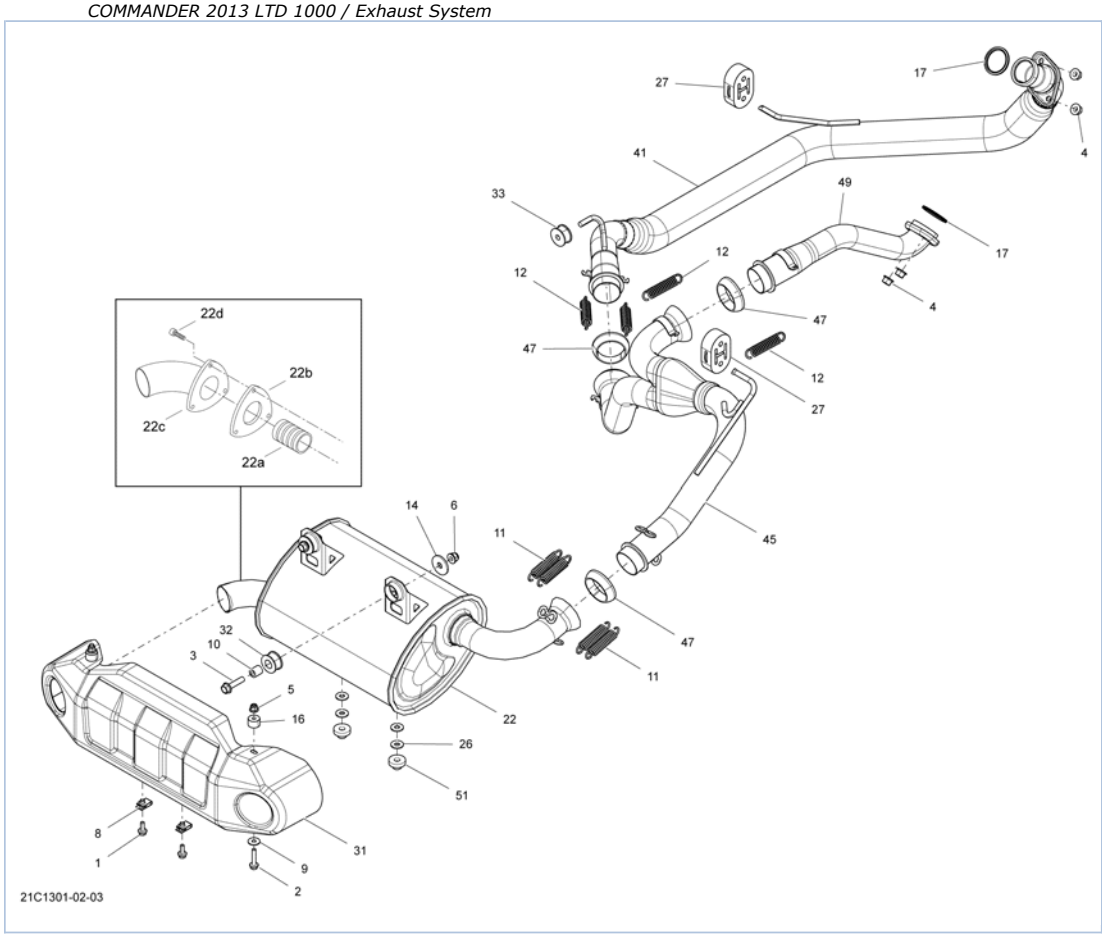
27
17
4
41
33
49
17
12
12
4
47
47
12
27
22d
22b
22c
22a
14
6
11
45
32
10
3
47
5
16
11
22
26
51
8
1
31
9
2
21C1301-02-03

Part List

COMMANDER 2013 LTD 1000 / Exhaust System

ITEM	PART NUMBER	PART NAME	QUANTITY	REMARKS
1	207661644	Hex. Flanged Screw M6 X 16	2	
2	207663044	Hex. Flanged Screw M6 X 30	2	
3	207683544	Hex. Flanged Screw M8 X 35	2	
4	233081416	Hex. Flanged Nut M8	4	
5	233261414	Hex. Flanged Elastic Nut M6	2	
6	233281414	Hex. Flanged Elastic Nut M8	2	
8	250000048	Pannel Nut M6 X 1.0	2	
9	250200082	Flat Washer	2	
10	293900106	Bushing	2	
11	415107100	Spring	4	
12	415107100	Spring	4	
14	503032900	Washer	2	
16	707000882	Bushing	2	
17	707600317	Gasket	2	
22	707600545	Muffler Ass'y	1	
26	XXX	Washer	4	
27	707600638	Rubber Bumper	2	
31	707600675	Deflector	1	
32	707600701	Anti-Vibration Rubber	2	
33	707600702	Anti-Vibration Rubber	1	
41	707601013	Front Head Pipe	1	
45	707601020	Link Head Pipe	1	
47	707601033	Exhaust Gasket	3	
49	707601016	Rear Head Pipe	1	
51	709200285	Grommet	2	
22a	715900089	Spark Arrestor	1	
22b	715900090	Gasket	1	
22c	715900091	Muffler Outlet End Piece	1	
22d	205062060	Socket Head Screw M6 X 20	3	

COMMANDER 2013 LTD 1000 / Air Intake

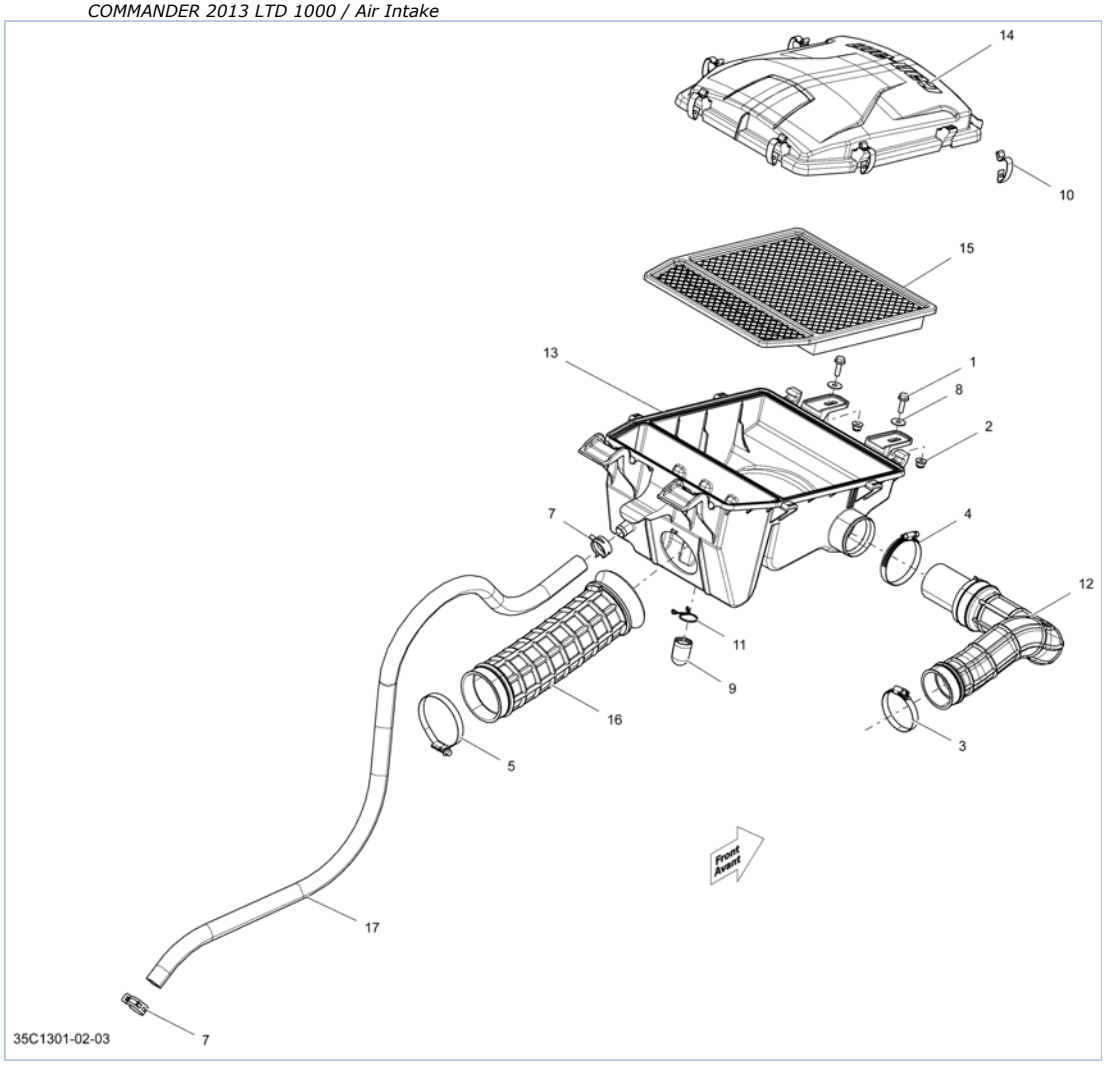

Part List

COMMANDER 2013 LTD 1000 / Air Intake

ITEM	PART NUMBER	PART NAME	QUANTITY	REMARKS
1	207662044	Hex. Flanged Screw M6 X 20	2	
2	233261414	Hex. Flanged Elastic Nut M6	2	
3	293650078	Norma Clamp	1	
4	293650079	Norma Clamp	1	
5	293650091	Norma Clamp	1	
7	293650213	Norma Spring Clamp	2	
8	391302000	Flat Washer	2	
9	707800080	DRAIN TUBE	1	
10	707800249	COVER BRACKET	6	
11	293650091	Norma Clamp	1	
12	707800322	Intake Adaptor	1	
13	707800325	AIR INTAKE SILENCER BASE	1	
14	707800326	Air Intake Silencer Cover	1	
15	707800327	Air Filter	1	
16	707800329	Intake Adaptor	1	
17	707800411	Hose 15.88 mm	AR	

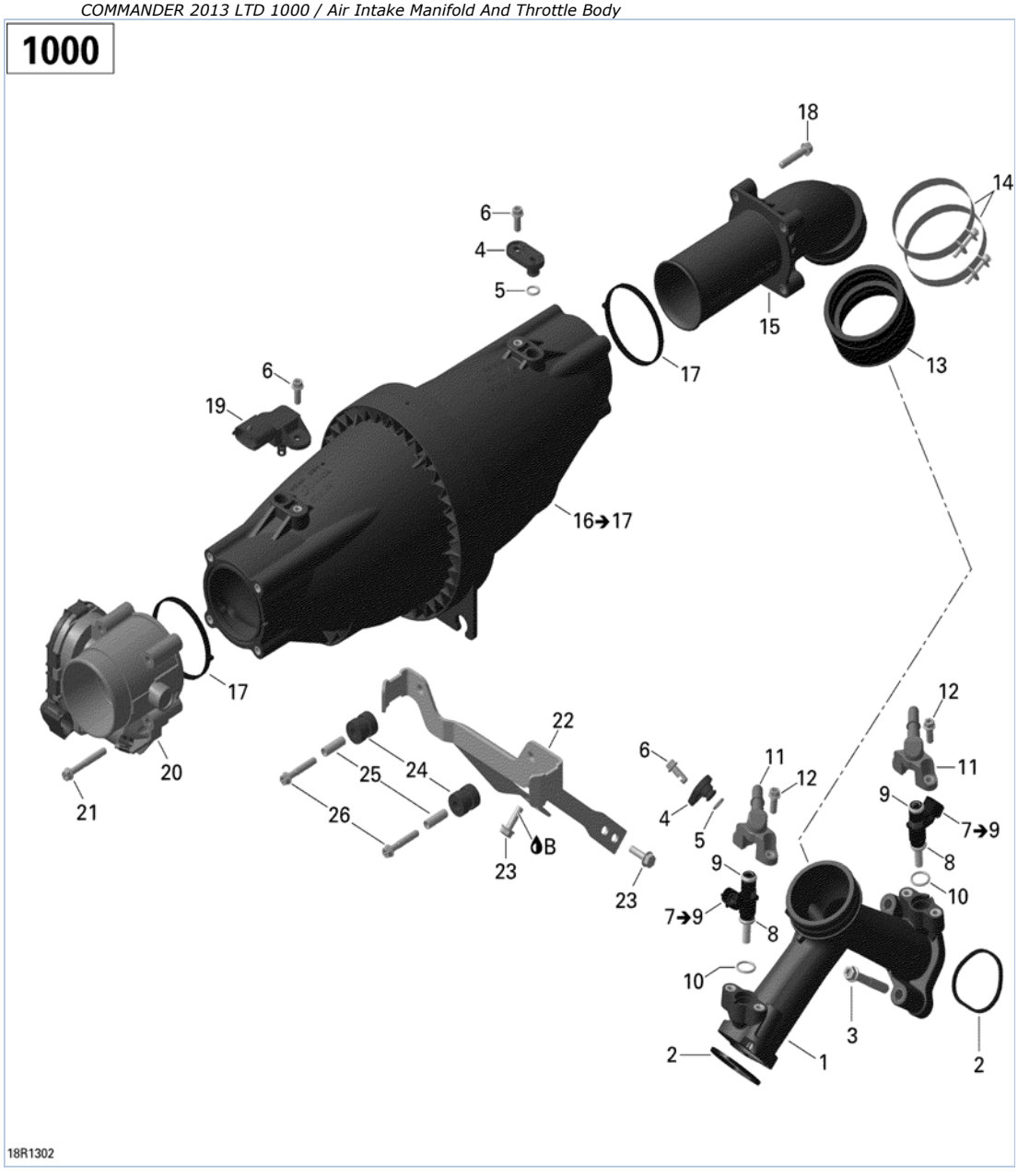
1000
18
14
6
4
5
15
17
13
6
19
16➔17
17
20
21
22
25
24
26
23
B
23
6
4
5
11
12
12
11
9
7➔9
8
9
7➔9
8
10
10
3
2
1
2
18R1302

Part List

COMMANDER 2013 LTD 1000 / Air Intake Manifold And Throttle Body

ITEM	PART NUMBER	PART NAME	QUANTITY	REMARKS
1	420667520	Air Intake Manifold	1	
2	420630642	Gasket	2	
3	420641213	Flanged Torx Screw M8 X 55	4	
4	420460980	Cover	2	
5	420230461	O-Ring	2	
6	420440147	Flanged Hex. Screw M6 X 12	3	
7	420874830	Injection Valve Ass'y	2	Includes 7 to 9
8	420431890	O-Ring	2	
9	420631220	O-Ring	2	
10	420631295	O-Ring	2	
11	420874901	Fuel Rail	2	
12	420641048	Flanged Torx Screw M6 X 16	4	
13	420267040	INTAKE NECK	1	
14	420251209	Clamp	2	
15	420667522	Air Inlet Manifold	1	
16	420667526	Air Inlet Manifold Ass'y	1	Includes 16 to 17
17	420431900	Gasket	2	
18	420241947	Hex. Screw M6 X 30	4	
19	707000564	Pressure And Temperature Sensor	1	
20	420892595	Throttle Body	1	
21	420641198	Flanged Torx Screw M6 X 45	4	
22	420651520	Support	1	
23	420441311	HEX.SCREW M6 X 20	2	
24	420660090	Rubber Bracket	2	
25	420847971	Spacer	2	
26	420441457	Hex. Screw M6 X 35	2	

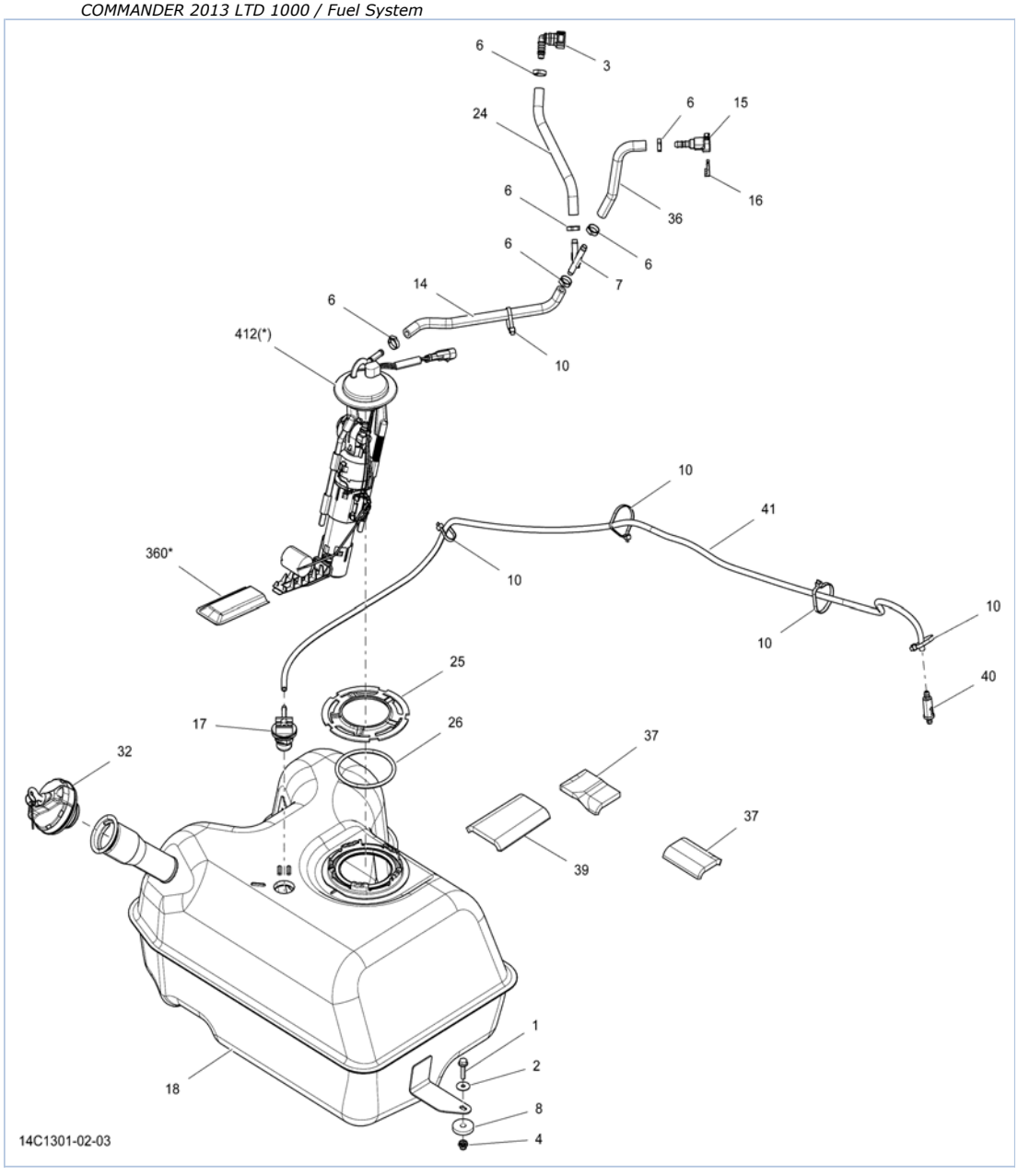
6
3
24
6
15
16
36
6
6
7
14
412(*)
10
10
41
360*
10
10
10
40
25
17
26
37
32
37
39
1
2
18
8
4
14C1301-02-03

Part List

COMMANDER 2013 LTD 1000 / Fuel System

ITEM	PART NUMBER	PART NAME	QUANTITY	REMARKS
1	207662544	Hex. Flanged Screw M6 X 25	2	
2	224060201	Flat Washer	2	
3	275500700	Quick Attach 90 deg	1	
4	293450274	Insert	2	
6	293650046	Oetiker Clamp	6	
7	293710136	Y-Fitting, 5/16''	1	
8	293830037	Rubber Washer	2	
10	414115200	Tie-Rap 180 mm	5	
14	709000393	Fuel Line	AR	
15	709000125	Female Quick Fitting Ass'y	1	
16	513033135	Locking Clip	1	
17	709000127	Rollover Valve	1	
18	709000196	Fuel Tank	1	
24	709000393	Fuel Line	AR	
25	709000274	Ring	1	
26	709000275	O-Ring	1	
32	709000268	Cap	1	
36	709000393	Fuel Line	AR	
37	709000288	NEOPRENE PAD	2	
39	709000289	NEOPRENE PAD	1	
40	709000330	Filter	1	
41	415080200	Hose, Polyurethane	AR	
360	709000389	Fuel Pre-Filter	1	
412	709000362	Fuel Pump	1	

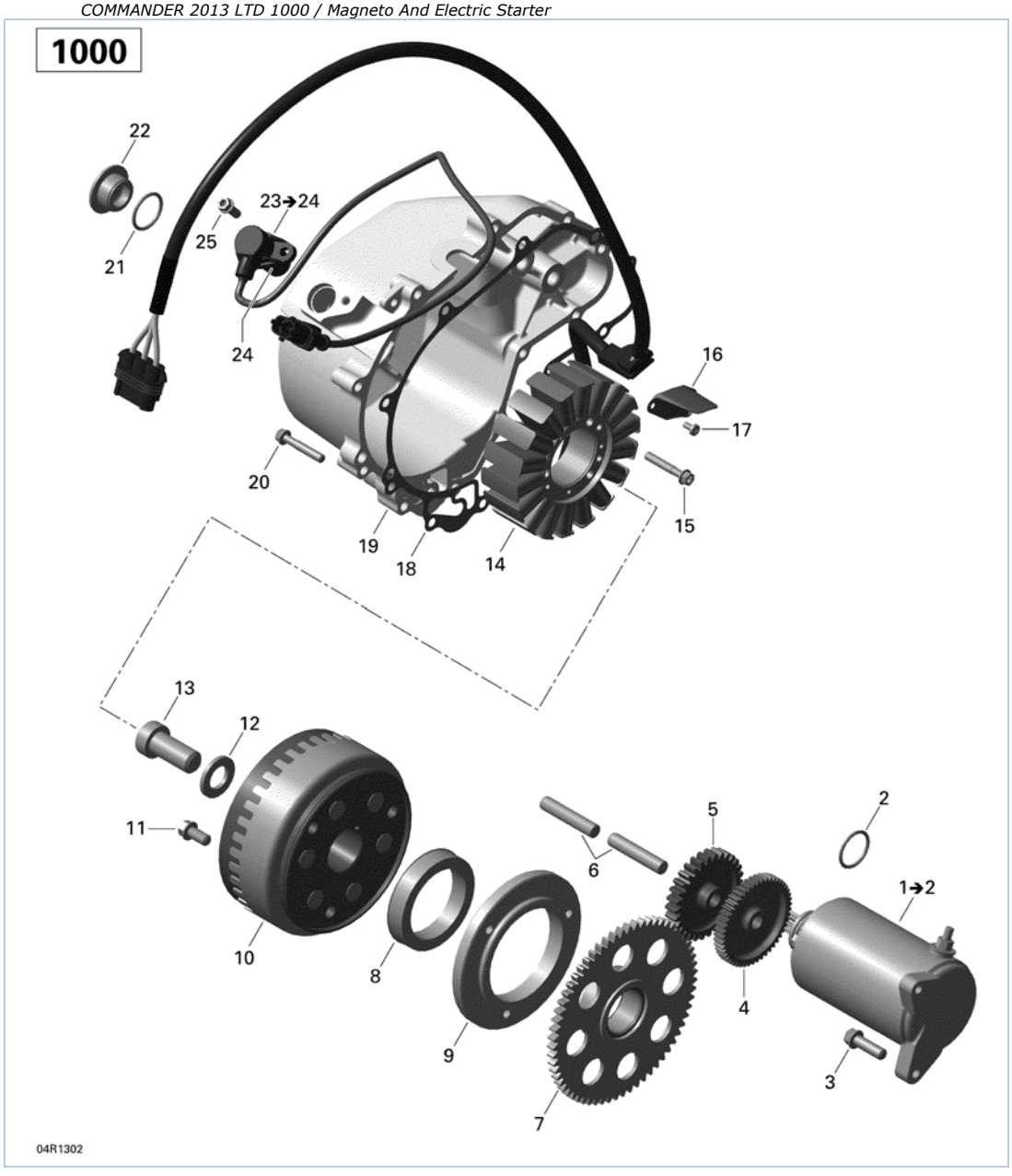
1000
22
21
23➔24
25
24
16
17
20
15
19
18
14
13
12
11
10
8
9
7
6
5
2
1➔2
4
3
04R1302

Part List

COMMANDER 2013 LTD 1000 / Magneto And Electric Starter

ITEM	PART NUMBER	PART NAME	QUANTITY	REMARKS
1	420684560	Starter Ass'y	1	Includes 1 to 2
2	420250140	O-Ring	1	
3	420440372	Flanged Torx Screw M8 X 25	1	
4	420634741	Double Gear	1	
5	420634605	Gear, 30 Teeth	1	
6	420229302	Location Pin	2	
7	420434235	Free Wheel Gear, 64 Teeth	1	
8	420659112	Sprag Clutch	1	
9	420659261	Sprag Clutch Housing	1	
10	420685649	Flywheel	1	
11	420440852	Flanged Torx Screw M8 X 16	3	
12	420627270	Shim	1	
13	420241549	Socket Head Screw M16 X 35	1	
14	420685632	Stator Plate	1	
15	420641258	Flanged Torx Screw M6 X 35	3	
16	420251880	Cable Inner Cover	1	
17	420240195	Tapping Screw M4 X 8	2	
18	420651200	Gasket	1	
19	420611132	Cover	1	
20	420641258	Flanged Torx Screw M6 X 35	11	
21	420430782	O-Ring	1	
22	420241630	Screw Plug	1	
23	420966570	Crankshaft Position Sensor Ass'y	1	Includes 23 to 24
24	420431580	O-Ring	1	
25	420641048	Flanged Torx Screw M6 X 16	1	

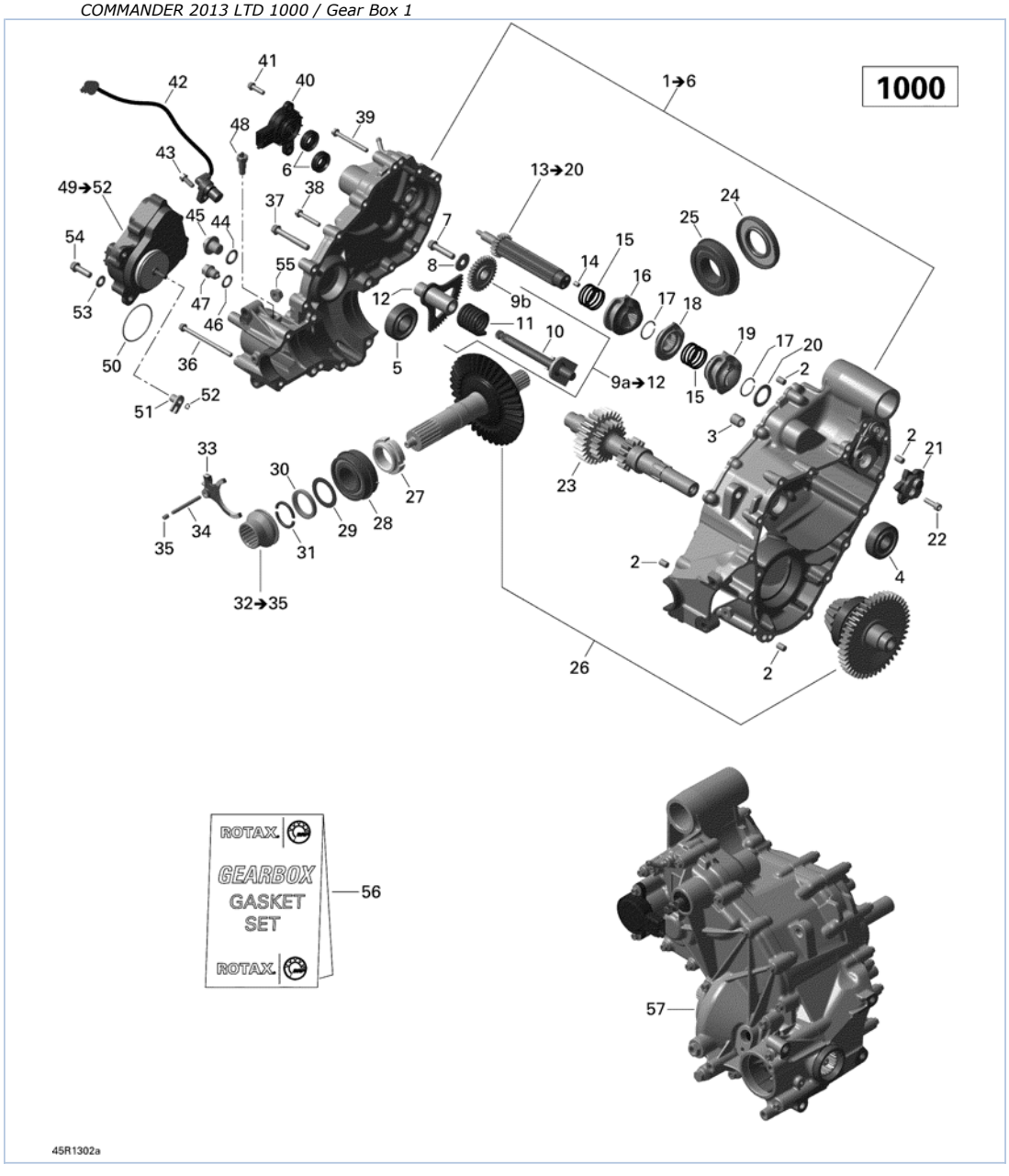
1000
1➔6
13➔20
9a➔12
32➔35
ROTAX
GEARBOX
GASKET
SET
ROTAX
56
57
45R1302a

Part List

COMMANDER 2013 LTD 1000 / Gear Box 1

ITEM	PART NUMBER	PART NAME	QUANTITY	REMARKS
1	XXX	Gear Housing Ass'y	1	Includes 1 to 6 See Item 57, Gear Box
2	420632010	Center Pin 8 X 12	2	
3	XXX	Dowel		See Item 57, Gear Box
4	420932815	BALL BEARING 6303E	1	
5	420932433	Ball Bearing	1	
6	420250450	Oil Seal	2	
7	420641188	Flanged Torx Screw M8 X 35	1	
8	420227937	PLAIN WASHER	1	
9a	420620929	SHIFT SHAFT ASS'Y	1	Includes 9a to 12
9b	XXX	Intermediate Gear, 30 Teeth	1	
10	XXX	SHIFT SHAFT	1	
11	XXX	Spring	1	
12	XXX	Tooth Segment	1	
13	420657230	SHIFT DRUM ASS'Y	1	Includes 13 to 20
14	XXX	Needle Pin	1	
15	XXX	Compression Spring	2	
16	XXX	Gear Shifting Gate	1	
17	XXX	Retaining Ring	2	
18	XXX	Disengagement Gate	1	
19	XXX	Gear Shifting Gate	1	
20	XXX	Thrust Washer	1	
21	XXX	Index Washer	1	
22	420241932	ALLEN SCREW M6 X 20	1	
23	420620896	Countershaft	1	
24	420831957	Oil Seal	1	
25	XXX	Ball Bearing	1	See Item 57, Gear Box
26	XXX	Drive Axle Set	1	See Item 57, Gear Box
27	XXX	Groove Nut	1	See Item 57, Gear Box
28	XXX	Ball Bearing	1	See Item 57, Gear Box
29	XXX	Shim Set	1	See Item 57, Gear Box
30	XXX	Angular Ring	1	See Item 57, Gear Box
31	XXX	Half Ring	2	See Item 57, Gear Box
32	420257676	Shifting Sleeve Kit	1	Includes 32 to 35
33	XXX	Shifting Fork	1	
34	XXX	Needle Pin	1	
35	420841772	Set Screw M6 X 8	1	
36	420641228	Flanged Torx Screw M6 X 85	2	
37	420641213	Flanged Torx Screw M8 X 55	5	
38	420641258	Flanged Torx Screw M6 X 35	8	
39	420440702	Flanged Torx Screw M6 X 55	2	
40	420266167	Angle Rotation Sensor	1	
41	420641048	Flanged Torx Screw M6 X 16	2	
42	420265626	SPEED SENSOR	1	
43	420641048	Flanged Torx Screw M6 X 16	1	
44	420650350	O-Ring	1	
45	420241660	Plug Screw M14 X 1.5	1	
46	420250640	Copper Washer	1	
47	420241786	Magnetic Drain Plug	1	
48	420640192	Position Switch	1	
49	415129174	Actuator Ass'y	1	Includes 49 to 52
50	415129175	Shifting Fork	1	
51	415129176	Circlip	1	
52	293300117	O-Ring	1	
53	420250311	Flat Washer 8.4 mm	3	
54	420440372	Flanged Torx Screw M8 X 25	3	

55	420842619	Hex. Nut M8	4	
56	420684139	Gasket Set	1	
57	420684786	Gear Box	1	

1000

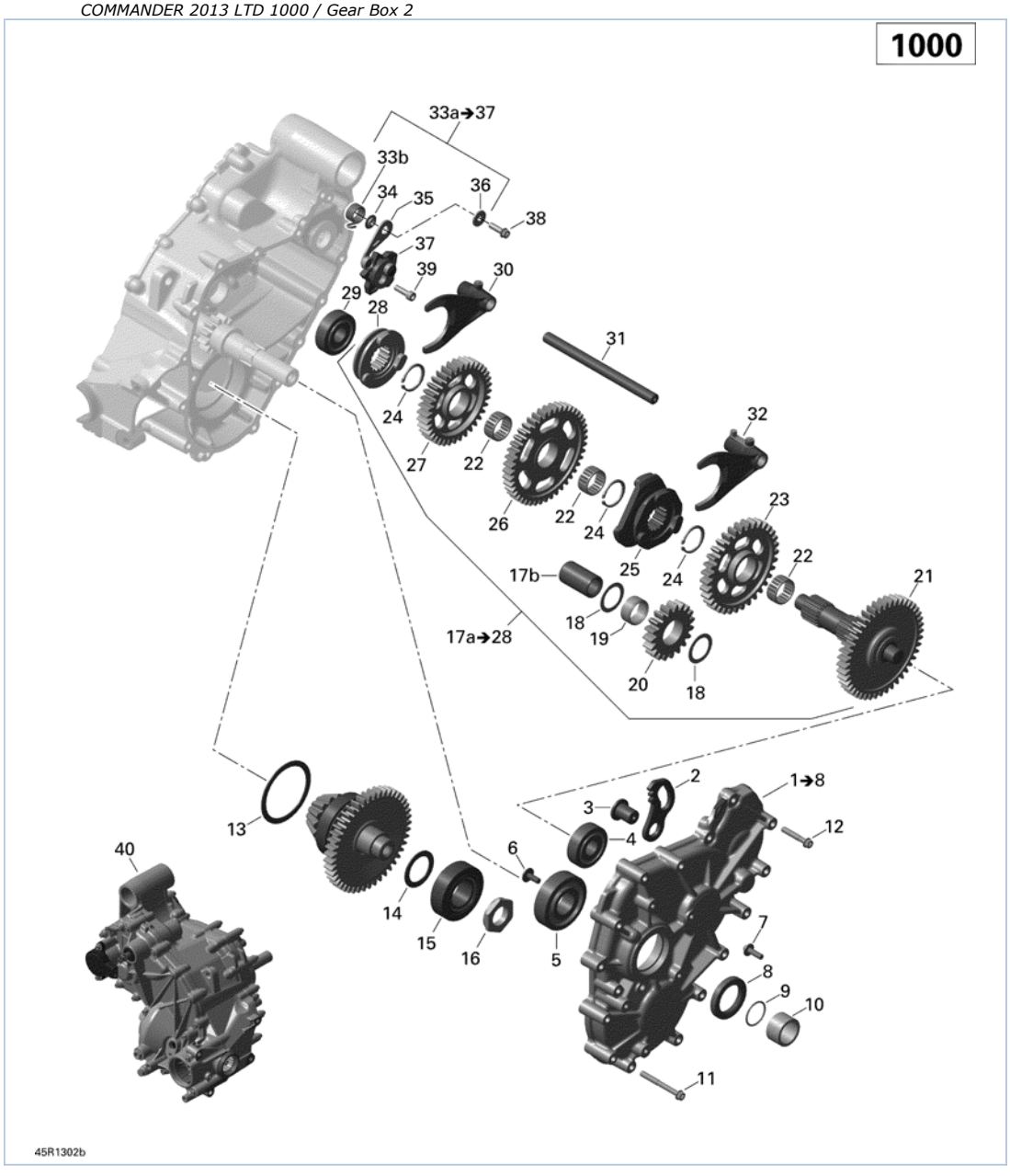
33a➔37
33b
34
35
36
38
37
39
30
29
28
31
24
27
22
26
22
24
32
23
25
24
22
21
17b
18
19
17a➔28
20
18
13
2
1➔8
3
12
4
40
6
14
15
16
5
7
8
9
10
11
45R1302b

Part List

COMMANDER 2013 LTD 1000 / Gear Box 2

ITEM	PART NUMBER	PART NAME	QUANTITY	REMARKS
1	XXX	LH Gear Housing Ass'y	1	Includes 1 to 8 See Item 40, Gear Box
2	420257658	Parking Lock Lever	1	
3	420647120	COLLAR SLEEVE	1	
4	420932815	BALL BEARING 6303E	1	
5	420932825	Ball Bearing	1	
6	420241529	Torx Screw M6 X 16	1	
7	420441430	Distance Screw M6	1	
8	420950087	Oil Seal	1	
9	420631610	O-Ring	1	
10	420247117	Distance Ring	1	
11	420440702	Flanged Torx Screw M6 X 55	13	
12	420641258	Flanged Torx Screw M6 X 35	3	
13	XXX	Shim Set	1	See Item 40, Gear Box
14	XXX	Shim Set	1	See Item 40, Gear Box
15	XXX	ROLLER BEARING	1	See Item 40, Gear Box
16	XXX	Hex. Nut M24 X 1.5	1	See Item 40, Gear Box
17a	420281270	Gear Set	1	Includes 17a to 28
17b	XXX	INTERMEDIATE GEAR SHAFT	1	
18	420944479	Thrust Washer	2	
19	420932930	Needle Bearing	1	
20	XXX	Intermediate Gear, 19 Teeth	1	
21	XXX	Main shaft	1	
22	420632070	Needle Bearing	3	
23	420434870	Gear Pinion, 34 Teeth	1	
24	420845771	Retaining Ring	3	
25	420257951	Shifting Sleeve	1	
26	420434861	Gear Pinion, 44 Teeth	1	
27	420434850	Gear Pinion, 36 Teeth	1	
28	420257942	Shifting Sleeve	1	
29	420932815	BALL BEARING 6303E	1	
30	420257628	SHIFT FORK	1	
31	420258386	FORK SPINDLE	1	
32	420257618	SHIFT FORK	1	
33a	420248532	INDEX LEVER ASS'Y	1	Includes 33a to 37
33b	XXX	Index Spring	1	
34	XXX	Step Ring	1	
35	XXX	INDEX LEVER	1	
36	XXX	Washer	1	
37	XXX	Index Washer	1	
38	420440207	Flanged Torx Screw M6 X 20	1	
39	420241939	ALLEN SCREW M6 X 20	1	
40	420684786	Gear Box	1	

1000

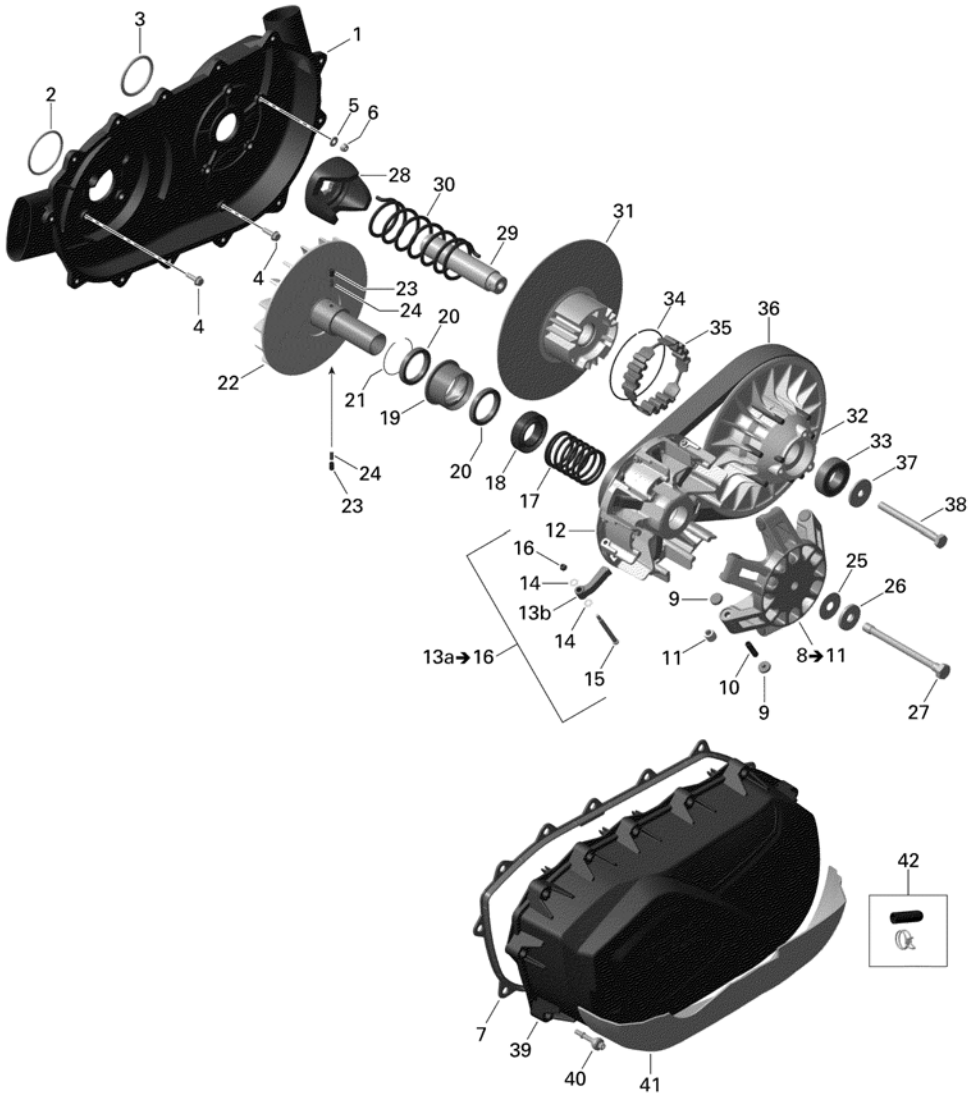
3
1
2
5
6
28
30
29
31
4
4
23
24
20
34
35
36
22
21
19
20
18
17
32
33
37
38
24
23
12
16
14
13b
14
15
13a→16
9
11
10
9
25
26
8→11
27
42
7
39
40
41
19R1302

Part List

COMMANDER 2013 LTD 1000 / Transmission

ITEM	PART NUMBER	PART NAME	QUANTITY	REMARKS
1	420611408	CVT Air Guide	1	
2	420430408	O-Ring	1	
3	420631088	O-Ring	1	
4	420441311	HEX.SCREW M6 X 20	8	
5	224061121	Flat Washer	1	
6	232561414	Elastic Stop Nut M6	1	
7	420430126	Gasket	1	
8	420280522	Governor Cup Ass'y	1	Includes 8 to 11
9	420281296	SLIDER SHOE SET	1	
10	417223257	Roller Axle	6	
11	417223387	Roller	6	
12	420280467	Outher Haft	1	
13a	420248496	Centrifugal Lever Kit	6	Includes 13a to 16
13b	XXX	Lever	6	
14	XXX	Thrust Washer	12	
15	XXX	Screw	6	
16	XXX	Lock Nut M5	6	
17	420238615	Compression Spring, Drive Pulley	1	
18	420627577	Spring Seat	1	
19	420257195	Drive Pulley Clutch	1	
20	420632377	Ball Bearing	2	
21	420245951	Retaining Ring	1	
22	420280374	Inner half	1	
23	420229577	Spring Sleeve	2	
24	420239134	Spring	2	
25	420627920	Thrust Washer	1	
26	420627765	Spring Washer	1	
27	420641855	HEX. SCREW M12 X 135	1	
28	420280472	Cam	1	
29	420220914	Driven Pulley Shaft	1	
30	420238179	Compression Spring	1	
31	420280238	Inner Half Ass'y	1	
32	420280178	Outer Half Pulley Ass'y	1	Includes 32 to 35
33	420932421	Ball Bearing	1	
34	420245910	Retaining Ring	1	
35	420660124	Torque Gear	1	
36	420280362	V-Belt	1	
37	420627590	Thrust Washer	1	
38	420441485	HEX. SCREW M10 X 110	1	
39	420611395	Variator Cover	1	
40	420440567	Hex. Distance Screw M6 X 30.5	7	
41	420975050	Heat Protection Mat	1	
42	707001179	Drain Plug Kit	1	

COMMANDER 2013 LTD 1000 / Brakes

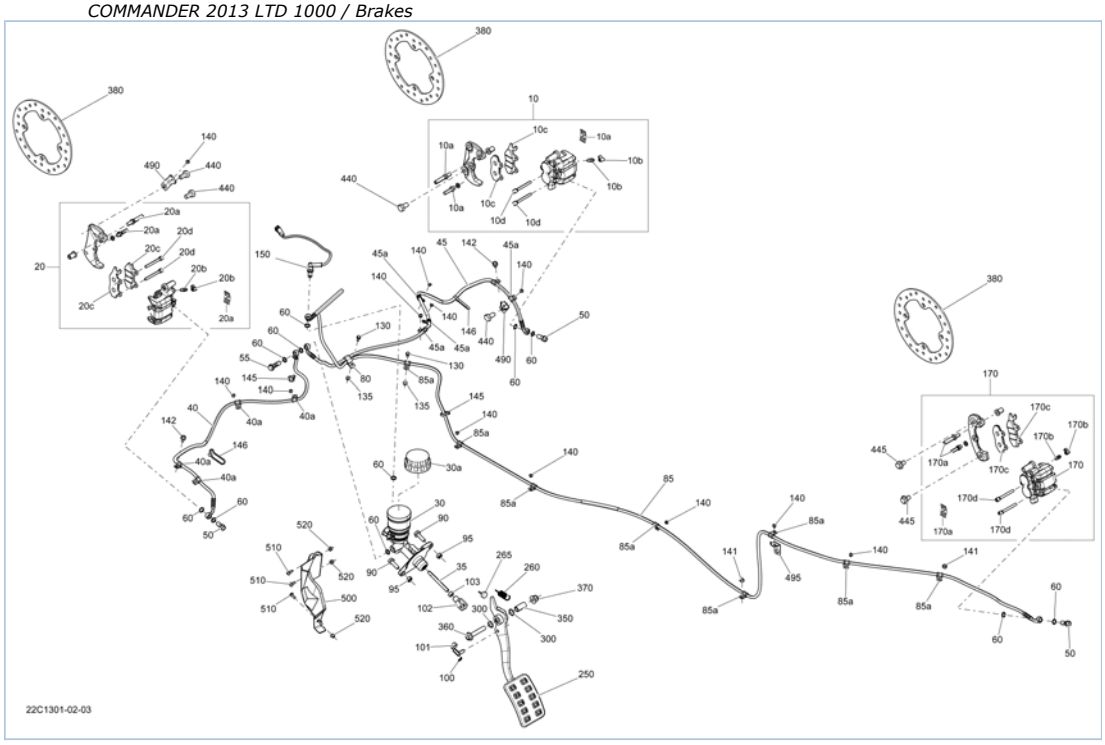

Part List

COMMANDER 2013 LTD 1000 / Brakes

ITEM	PART NUMBER	PART NAME	QUANTITY	REMARKS
10	705600678	RH CALIPER	1	Includes 10 to 10d
10a	715500333	Spring Boot Kit	1	
10b	705600080	Bleeding Screw	1	
10c	715500336	Brake Pad Kit	1	
10d	715500337	PIN SET	1	
20	705600679	LH CALIPER	1	Includes 20 to 20d
20a	715500333	Spring Boot Kit	1	
20b	705600080	Bleeding Screw	1	
20c	715500335	Brake Pad Kit	1	
20d	715500337	PIN SET	1	
30	705600681	Master Cylinder	1	Includes 30 to 30a
30a	715500332	Diaphragm Cap Kit	1	
35	705600833	Master Cylinder Rod	1	
40	705600943	LH Front Hose	1	Includes 40 to 40a
40a	705600459	Clamp	4	
45	705600944	RH Front Hose	1	Includes 45 to 45a
45a	705600459	Clamp	5	
50	705600609	Banjo Bolt	3	
55	705600958	Banjo Bolt	1	
60	705600310	Copper Washer	11	
80	293650220	Clamp	1	
85	705600945	REAR FLEXIBLE HOSE	1	Includes 85 to 85a
85a	705600459	Clamp	8	
90	207682544	Hex. Flanged Screw M8 X 25	2	
95	232581414	Hex. Elastic Stop Nut M8	2	
100	371800700	Cotter Pin	1	
101	250400056	Pin	1	
102	705600100	YOKE	1	
103	232081414	Hex. Nut M8	1	
130	210251680	Hex. Forming Screw M5 X 16	2	
135	233251494	ELASTIC FLANGED NUT M5	2	
140	390402200	Pop Rivet 3/16"	12	
141	232561414	Elastic Stop Nut M6	2	
142	210261040	Hex. Flanged Screw M6 X 10	2	
145	414115200	Tie-Rap 180 mm	2	
146	414115200	Tie-Rap 180 mm	2	
150	705600946	Brake Switch	1	
170	705600872	REAR CALIPER	1	Includes 170 to 170d
170a	715500333	Spring Boot Kit	1	
170b	705600080	Bleeding Screw	1	
170c	715500336	Brake Pad Kit	1	
170d	715500337	PIN SET	1	
250	705600724	BRAKE PEDAL	1	
260	705600792	BRAKE PEDAL SPRING	1	
265	708000759	Rubber Stopper	1	
300	293300144	O-Ring	2	
350	705600815	Inner Spacer	1	
360	207605544	HEX. FLANGED SCREW M10 X 55	1	
370	233201414	Hex. Flanged Elastic Nut M10	1	
380	705600684	Brake Disc	3	
440	250000057	Hex. Screw M10 X 20, Scotch Grip	4	
445	250000060	Flanged Screw M10 X 16, Scotch Grip	2	

490	705601088	Bracket	2	
495	705601088	Bracket	1	
500	705600917	LH Front Deflector	1	
510	250000145	Torx Screw M5 X 14	3	
520	233251494	ELASTIC FLANGED NUT M5	3	

COMMANDER 2013 LTD 1000 / Drive System, Front

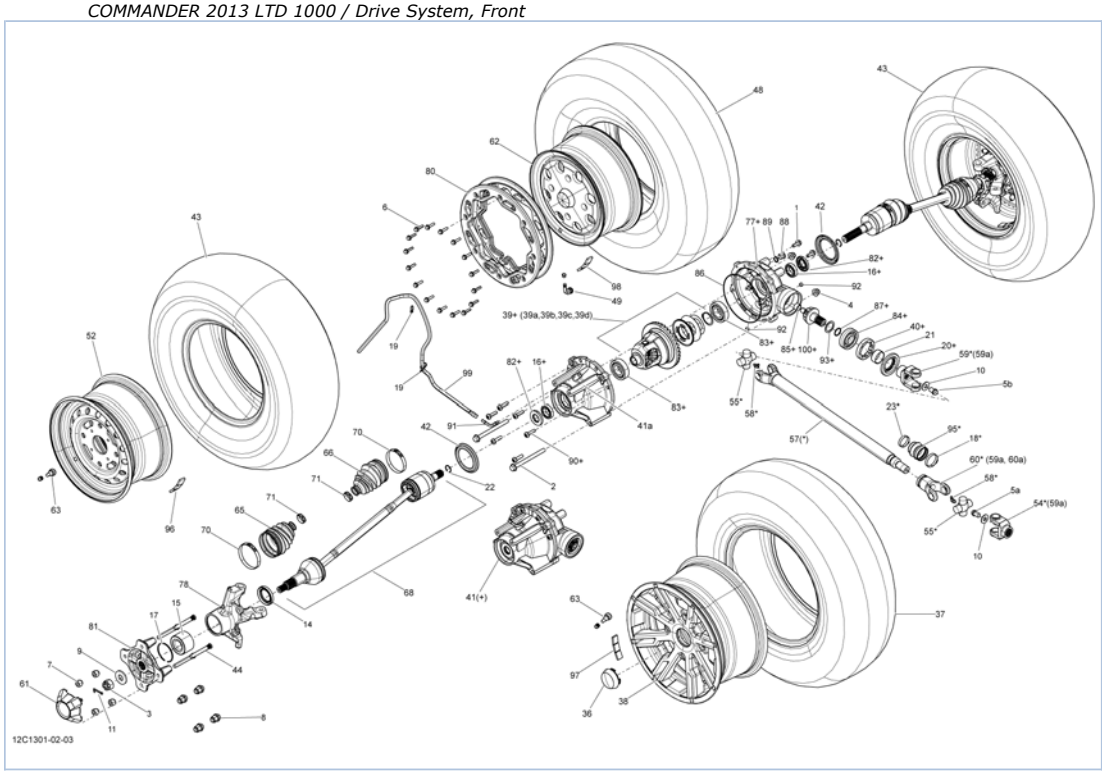

Part List

COMMANDER 2013 LTD 1000 / Drive System, Front

ITEM	PART NUMBER	PART NAME	QUANTITY	REMARKS
1	207582044	Hex. Flanged Screw M8 X 20, Scotch Grip	2	
2	230602546	Hex. Flanged Screw M10 X 125	2	
3	250100047	HEX. CASTELLATED NUT M18	2	
4	233201416	Hex. Flanged Elastic Nut M10	2	
6	250000435	Hex. Flanged Screw M6 X 25	16	
7	N/A	Not available for this vehicle	8	
8	250100082	Chrome Wheel Nut M10 X 1.25	8	
9	250200049	Spring Washer	2	
10	250200102	Flat Washer	2	
11	250400036	Cotter Pin	2	
14	293250246	O-Ring	2	
15	293350040	CONE BEARING	2	
16	293350044	Ball Bearing	2	
17	293370019	Circlip	2	
18	293650138	Oetiker Clamp	1	
19	293750002	Tie-Rap 142 mm	2	
20	705400027	Oil Seal	1	
21	705400036	Wear Ring	1	
22	705400042	Circlip	2	
23	509000045	Oetiker Gear Clamp	1	
36	705400520	Wheel Cap	2	
37	705400631	FRONT TIRE	2	
37	N/A	Not available for this vehicle	2	
38	705401098	FRONT RIM	1	
39	705400822	DIFFERENTIAL	1	
40	705400661	Nut	1	
41	705401241	FRONT DIFFERENTIAL ASS'Y	1	
42	705400780	WEAR SLEEVE	2	
43	N/A	Not available for this vehicle	2	
44	705400791	WHEEL STUD	8	
48	N/A	Not available for this vehicle	2	
49	N/A	Not available for this vehicle	2	
52	N/A	Not available for this vehicle	2	
54	715900121	Coupling Yoke	1	
55	715900183	U-Joint	2	
57	705400915	Axle Drive Ass'y	1	
58	715900184	Nipple	2	
59	715900116	Fixed Yoke Joint	1	
60	715900120	Spline Yoke	1	
61	N/A	Not available for this vehicle	2	
62	N/A	Not available for this vehicle	2	
63	705400193	Rim Valve with Cap	2	
65	XXX	BOOT KIT	1	
66	XXX	DIFFERENTIAL BOOT KIT	1	
68	705401106	RH Half Shaft	1	
68	705401105	LH Half Shaft	1	
70	XXX	Oetiker Clamp 71,1mm	2	
71	XXX	Oetiker Clamp 23mm	4	
77	705401136	Front Gear Cover	1	
78	705401204	LH Front Knuckle	1	
78	705401205	RH Front Knuckle	1	
80	N/A	Not available for this vehicle	1	

80	N/A	Not available for this vehicle	1	
81	705401314	WHEEL HUB	2	
82	705500255	Oil Seal	2	
83	705500259	Ball Bearing	2	
84	705500260	Ball Bearing	1	
85	705500261	Needle Bearing	1	
86	705500265	Seal	1	
87	705500267	O-Ring	1	
88	705500504	FILL LEVEL PLUG	1	
89	705500506	Copper Washer	1	
90	705500892	Screw	6	
91	705500893	Vent Valve	1	
92	705500894	Drain Plug	2	
93	705501162	PINION GEAR SHIM	1	
95	715900118	RUBBER BOOT	1	
96	705501385	1/2 OZ Weight	AR	
97	705501385	1/2 OZ Weight	AR	
98	705501385	1/2 OZ Weight	AR	
99	415080200	Hose, Polyurethane	AR	
100	705501588	10 Teeth Pinion	1	
39a	703500049	Pinion Shim Kit	3	
39b	705500075	Pinion Gear Shim .022"	1	
39c	703500288	DIFFERENTIAL SHIM KIT	8	
39d	703500050	DIFFERENTIAL SHIM KIT	5	
41a	705400762	Front Cover	1	
59a	715900117	Snap Ring	8	
5a	250000359	Hex Flanged Screw M12 x 16	1	
5b	250000378	Hex Flanged Screw S.Grip M12 X 16	1	
60a	715900185	Cover	1	

COMMANDER 2013 LTD 1000 / Front Suspension

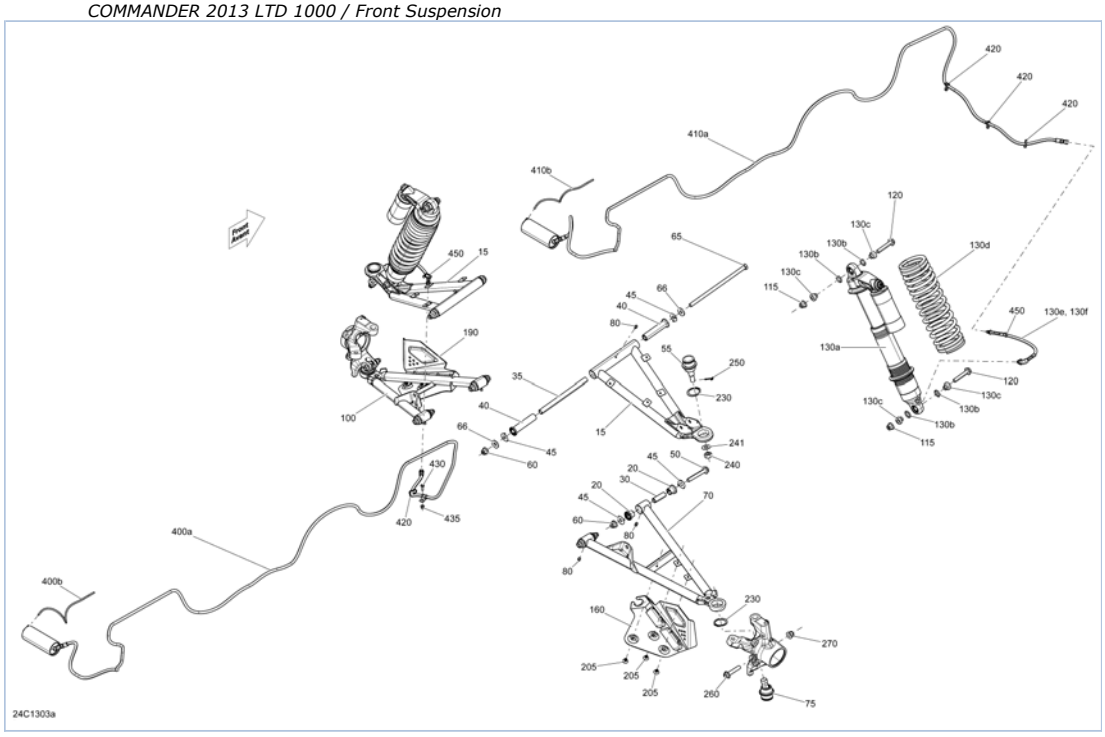

Part List

COMMANDER 2013 LTD 1000 / Front Suspension

ITEM	PART NUMBER	PART NAME	QUANTITY	REMARKS
15	706200796	Suspension Upper Arm	2	
20	706200181	Cushion	8	
30	706201587	INNER BUSHING	4	
35	706201061	INNER BUSHING	2	
40	706201062	Cushion	4	
45	706201063	Wear Plate	12	
50	207607046	HEX. FLANGED SCREW M10 X 70	4	
55	706201370	Upper Ball Joint	2	
60	233201416	Hex. Flanged Elastic Nut M10	6	
65	250000510	Hex. Cap Screw M10 X 225	2	
66	503190439	Washer	4	
70	706200744	RH Lower Suspension Arm	1	
75	706201371	Upper Ball Joint	2	
80	408200700	Grease Fitting	6	
100	706200742	LH Lower Suspension Arm	1	
115	233201416	Hex. Flanged Elastic Nut M10	4	
120	207605544	HEX. FLANGED SCREW M10 X 55	4	
130a	706201364	Front Shock	2	Includes 130a to 130c
130b	715500360	O-Ring Bushing	8	
130c	715500361	INTERIOR BUSHING	8	
130d	706201473	Spring, Red-White	2	
130e	706201446	LH Front Hose Assembly	2	Includes 130e to 130f
130f	705600459	Clamp	2	
160	706201670	RH Protector	1	
190	706201669	LH Protector	1	
205	293150104	Pop Rivet 3/16"	6	
230	293370035	Circlip	4	
240	250100099	Nut M12	2	
241	706200281	HARDENED WASHER	2	
250	211400017	Cotter Pin	2	
260	207605044	HEX. FLANGED SCREW M10 X 50	2	
270	233201414	Hex. Flanged Elastic Nut M10	2	
400a	706201536	LH Front Hose Assembly	1	Includes 400a to 400b
400b	706001143	Hose, Polyurethane 4 mm	1	
410a	706201537	RH Front Hose Ass'y	1	Includes 410a to 410b
410b	706001143	Hose, Polyurethane 4 mm	1	
420	293750002	Tie-Rap 142 mm	4	
430	210251680	Hex. Forming Screw M5 X 16	1	
435	233251494	ELASTIC FLANGED NUT M5	1	
450	414115200	Tie-Rap 180 mm	2	

COMMANDER 2013 LTD 1000 / Steering

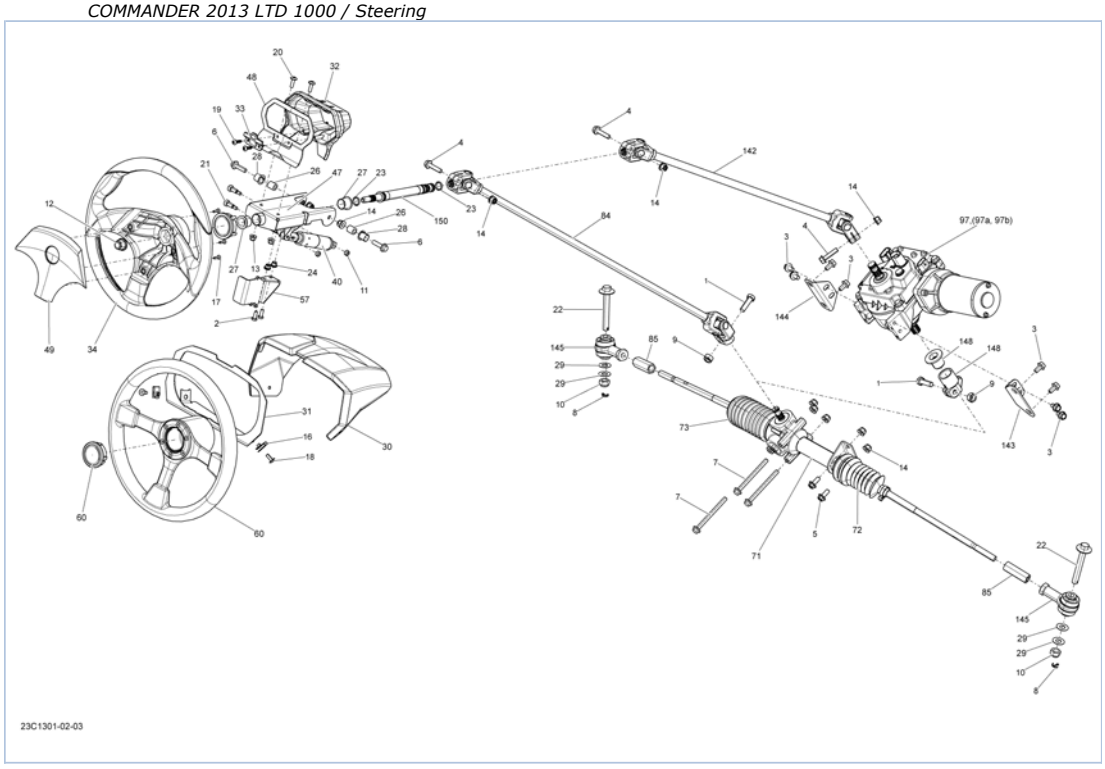

Part List

COMMANDER 2013 LTD 1000 / Steering

ITEM	PART NUMBER	PART NAME	QUANTITY	REMARKS
1	207103586	Hex. Screw M10 X 35	1	
2	N/A	Not available for this vehicle	2	
3	207581644	Hex. Flanged Screw M8 X 16, Scotch Grip	8	
4	207583586	Hex. Flanged Screw M8 X 35, Scotch Grip	2	
5	207682044	Hex. Flanged Screw M8 X 20	2	
6	207683044	Hex. Flanged Screw M8 X 30	2	
7	207689534	Hex. Flanged Scew M8 X 95	3	
8	211400017	Cotter Pin	2	
9	232500416	Elastic Stop Nut M10	1	
10	232521416	Elastic Flanged Stop Nut M12	2	
11	232561414	Elastic Stop Nut M6	2	
12	233221414	Hex. Flanged Elastic Nut M12	1	
13	233261414	Hex. Flanged Elastic Nut M6	2	
14	233281414	Hex. Flanged Elastic Nut M8	AR	
16	250000048	Pannel Nut M6 X 1.0	2	
17	250000084	Phillips Screw K40 X 16	3	
18	250000129	Torx Screw M6 X 16	2	
19	250000297	Truss Head Torx Screw K50 X 20	2	
20	250000350	Torx Truss Screw M6 X 20	2	
21	250000381	Socket Head Screw	2	
22	250000590	Hex. Cap Screw M12 X 88	2	
23	293300144	O-Ring	2	
24	N/A	Not available for this vehicle	2	
26	293900106	Bushing	2	
27	415108000	Cushion	2	
28	705600799	Bushing	2	
29	706200281	HARDENED WASHER	4	
30	707900124	Upper Cluster Cover	1	
31	707900013	Cluster Support	1	
32	709400514	Speedometer Cover	1	
33	709400573	Latch Indicator Cover	1	
34	709400650	Steering Wheel	1	
40	709400656	Adjustment Cylinder	1	
47	709400655	Steering Support	1	
48	709400760	Cluster Support	1	
49	709400780	Steering Center	1	
57	N/A	Not available for this vehicle	1	
60	715001134	Steering Wheel Kit	1	
71	709401195	Rack and Pinion Steering Ass'y	1	
72	715900078	RH Boot Kit	1	
73	715900077	LH Boot Kit	1	
84	N/A	Not available for this vehicle	1	
85	715900150	Nut Tie Rod End	2	
97	709401068	Power Steering Ass'y	1	
142	709401070	Steering Shaft Ass'y	1	
143	709401128	RH DPS Support	1	
144	709401129	LH DPS Support	1	
145	709401134	Ball Joint	2	
148	709401138	Coupling Ass'y	1	
150	709401167	Steering Shaft	1	
97a	709401115	DPS Calibrated Module	1	

97b	709401215	DPS Module Software	1	

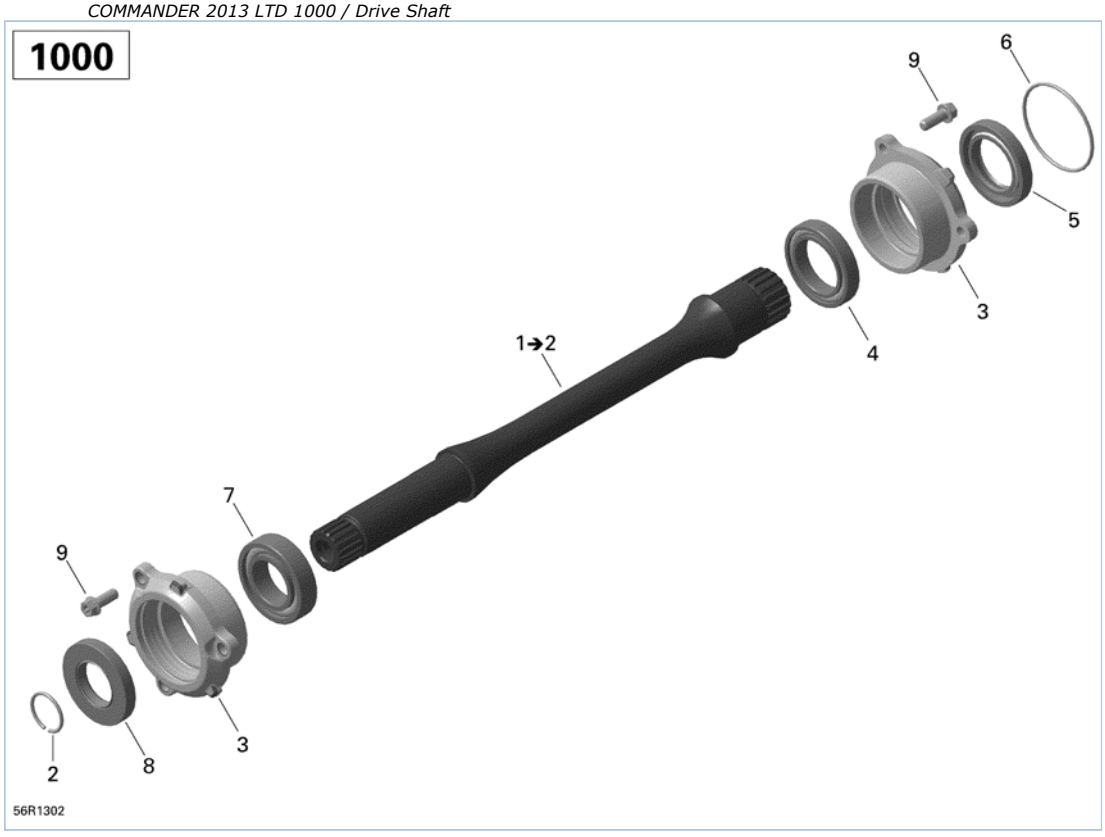
1000
9
6
5
3
4
1➔2
7
9
3
8
2
56R1302

Part List

COMMANDER 2013 LTD 1000 / Drive Shaft

ITEM	PART NUMBER	PART NAME	QUANTITY	REMARKS
1	420620517	DRIVE SHAFT ASS'Y	1	Includes 1 to 2
2	420245010	Circlip	1	
3	420611221	BEARING COVER	2	
4	420632275	Ball Bearing	1	
5	420850055	Oil Seal	1	
6	420230305	O-Ring	1	
7	420232341	Ball Bearing	1	
8	420430589	Oil Seal	1	
9	420641048	Flanged Torx Screw M6 X 16	6	

COMMANDER 2013 LTD 1000 / Drive System, Rear

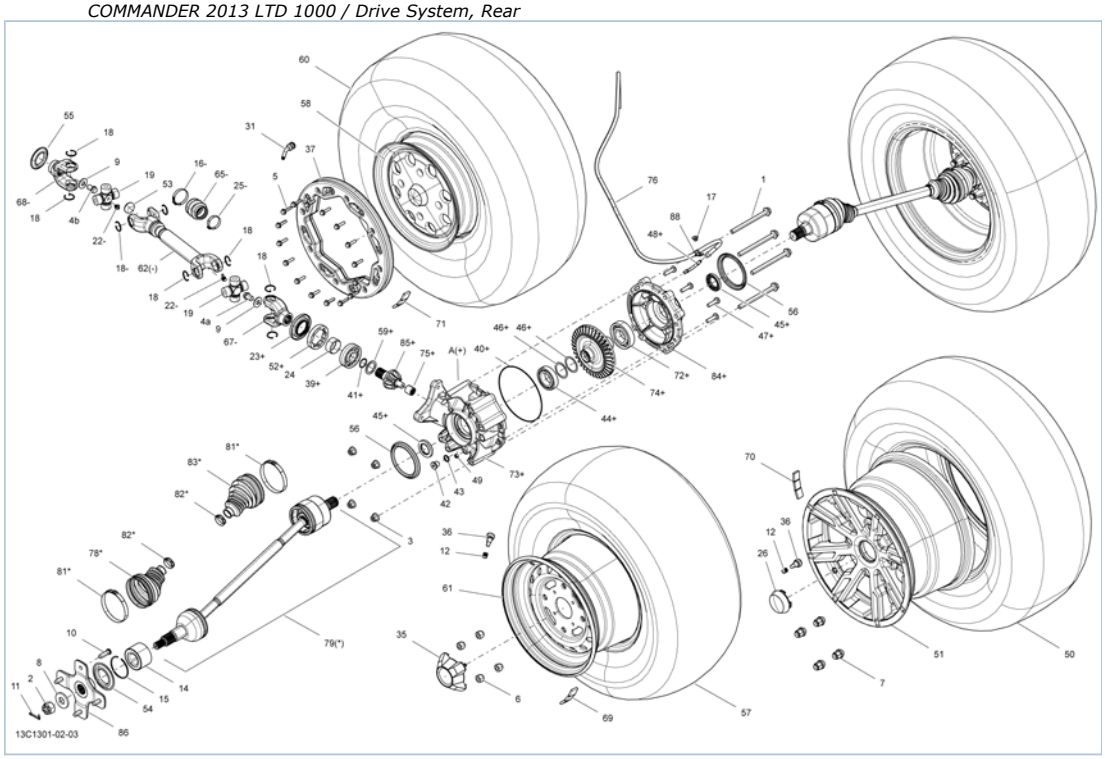

Part List

COMMANDER 2013 LTD 1000 / Drive System, Rear

ITEM	PART NUMBER	PART NAME	QUANTITY	REMARKS
1	230602546	Hex. Flanged Screw M10 X 125	4	
2	250100047	HEX. CASTELLATED NUT M18	2	
3	233201416	Hex. Flanged Elastic Nut M10	4	
5	N/A	Not available for this vehicle	16	
6	N/A	Not available for this vehicle	8	
7	250100082	Chrome Wheel Nut M10 X 1.25	8	
8	250200049	Spring Washer	2	
9	250200102	Flat Washer	2	
10	250300045	WHEEL STUD	4	
11	250400036	Cotter Pin	2	
12	293000110	Valve Cap	2	
14	293350040	CONE BEARING	2	
15	293370019	Circlip	2	
16	293650138	Oetiker Clamp	2	
17	390402200	Pop Rivet 3/16"	1	
18	715900102	Snap Ring	8	
19	715900186	U-Joint	2	
22	715900184	Nipple	2	
23	705400027	Oil Seal	1	
24	705400036	Wear Ring	1	
25	509000045	Oetiker Gear Clamp	1	
26	705400520	Wheel Cap	2	
31	705400872	Rim Valve with Cap	1	
35	705400921	Wheel Cap	2	
36	705400193	Rim Valve with Cap	1	
37	N/A	Not available for this vehicle	1	
39	705500260	Ball Bearing	1	
40	705500265	Seal	1	
41	705500267	O-Ring	1	
42	705500504	FILL LEVEL PLUG	1	
43	705500506	Copper Washer	1	
44	705500749	Ball Bearing	1	
45	705501196	Oil Seal	2	
45	705501196	Oil Seal	2	
46	703500548	DIFFERENTIAL SHIM KIT	1	
46	703500049	Pinion Shim Kit	1	
47	705500892	Screw	4	
48	705500893	Vent Valve	1	
49	705500894	Drain Plug	1	
50	705500964	REAR TIRE	1	
51	705501471	REAR RIM	1	
52	705500987	Nut	1	
53	715900187	Cover	1	
54	705501121	WEAR SLEEVE	1	
55	705501123	Protector	1	
56	705501124	Wear Ring	2	
57	N/A	Not available for this vehicle	1	
58	N/A	Not available for this vehicle	1	
59	705501162	PINION GEAR SHIM	1	
59	705500075	Pinion Gear Shim .022"	1	
60	N/A	Not available for this vehicle	1	
61	705501623	Rear Rim, Black	1	

62	705501257	Drive Axle Ass'y	1	
65	715900118	RUBBER BOOT	1	
67	715900101	Fixe Yoke	1	
68	705501373	Fixed Joint	1	
69	N/A	Not available for this vehicle	AR	
70	705501385	1/2 OZ Weight	AR	
71	N/A	Not available for this vehicle	AR	
72	705501389	Ball Bearing	1	
73	705501395	PINION REAR COVER	1	
74	705501397	Gear, 36 Tooth	1	
75	705501408	Needle Bearing	1	
76	415080200	Hose, Polyurethane	AR	
78	XXX	BOOT KIT	2	
79	705501481	Half Shaft	2	
81	XXX	Oetiker Clamp (27,5mm)	1	
82	XXX	Oetiker Clamp (81mm)	1	
83	XXX	BOOT KIT	2	
84	705501507	Rear Differential Cover	1	
85	705501571	Pinion 10 Tooth	1	
86	705501713	WHEEL HUB ASS'Y	1	
88	705600459	Clamp	1	
4a	250000378	Hex Flanged Screw S.Grip M12 X 16	1	
4b	250000359	Hex Flanged Screw M12 x 16	1	
A	705501506	Differential Ass'y	1	

COMMANDER 2013 LTD 1000 / Rear Suspension

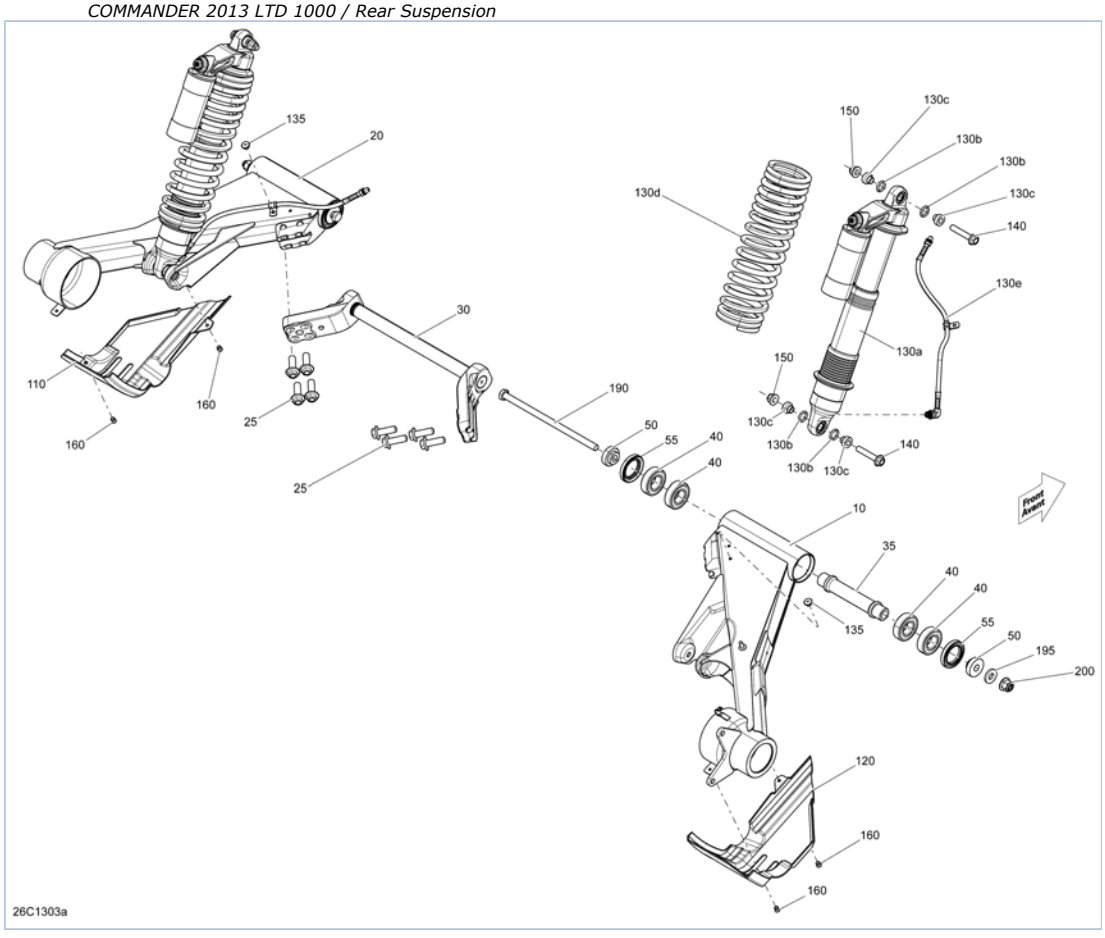

Part List

COMMANDER 2013 LTD 1000 / Rear Suspension

ITEM	PART NUMBER	PART NAME	QUANTITY	REMARKS
10	706001318	RH Swing Arm	1	
20	706001319	LH Swing Arm	1	
25	207523544	Hex. Flanged Screw M12 X 35, Scotch Grip	8	
30	706001322	Sway Bar	1	
35	706000616	Pivot Bushing	2	
40	293350055	Ball Bearing	8	
50	706000629	Spacer	4	
55	293200094	Seal	4	
110	706000630	LH Joint Protector	1	
120	706000814	RH Joint Protector	1	
130a	706001039	Rear Shock Ass'y	2	Inclus 130a to 130c
130b	715500360	O-Ring Bushing	8	
130c	715500361	INTERIOR BUSHING	8	
130d	706001040	Rear Spring, Yellow-White	2	
130e	706001118	Rear Hose Ass'y	2	
135	390406500	Pop Rivet 3/16"	2	
140	207605544	HEX. FLANGED SCREW M10 X 55	4	
150	233201416	Hex. Flanged Elastic Nut M10	4	
160	293150104	Pop Rivet 3/16"	4	
190	250000515	Hex. Cap Screw M12 X 241	2	
195	250200120	Flat Washer M12	2	
200	233221416	Elastic Flange Nut M12	2	

COMMANDER 2013 LTD 1000 / Rear Suspension Compressor

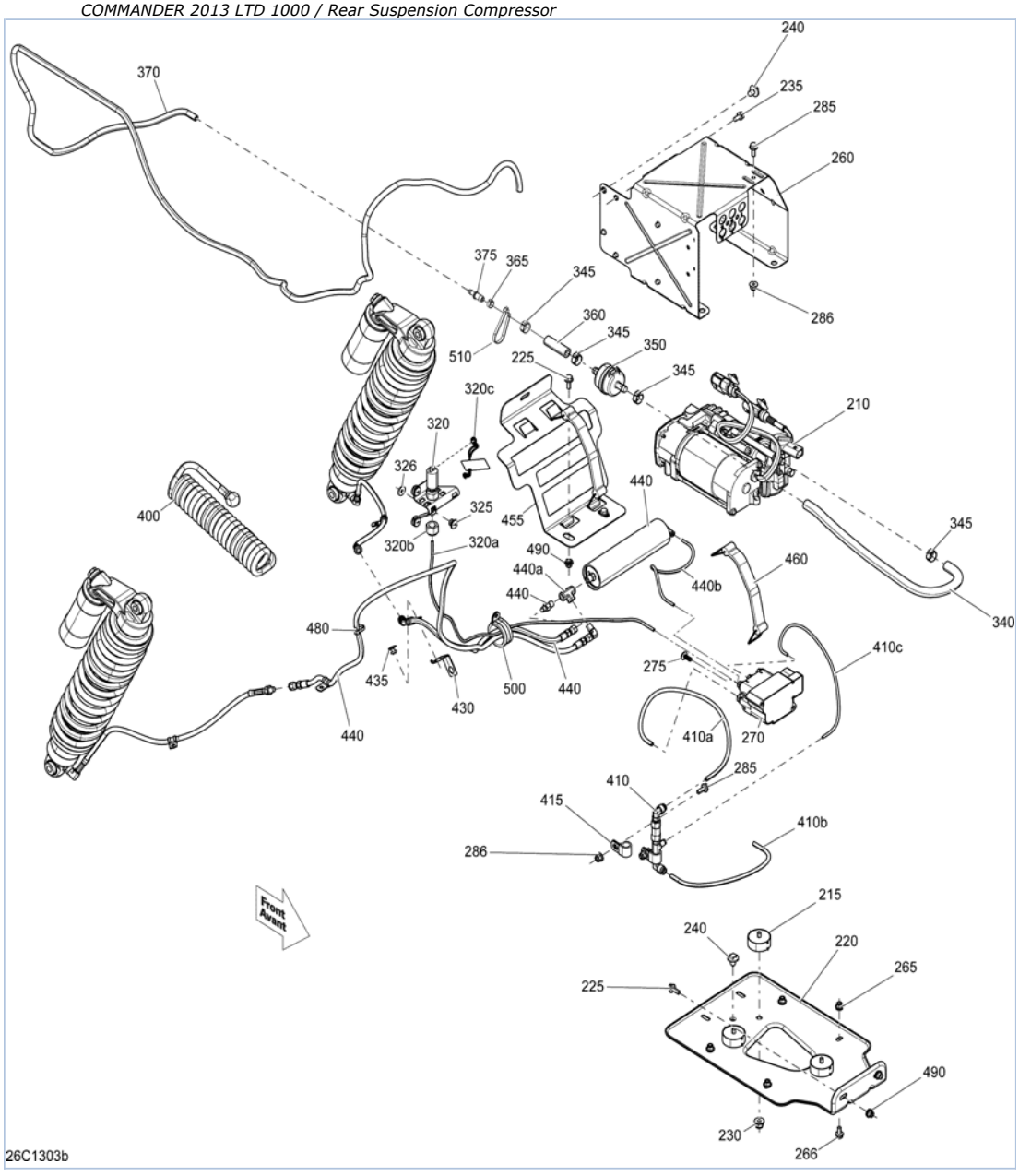

Part List

COMMANDER 2013 LTD 1000 / Rear Suspension Compressor

ITEM	PART NUMBER	PART NAME	QUANTITY	REMARKS
210	706001100	Compressor	1	
215	706001127	Rubber Mount	3	
220	706001121	LOWER SUPPORT	1	
225	207561644	Hex. Flanged Screw M6 X 16, Scotch Grip	4	
230	233281414	Hex. Flanged Elastic Nut M8	3	
235	210261280	Hex. Flanged Screw M6 X 12	4	
240	293730018	Mount Dart	3	
260	706001120	Upper Support	1	
265	293450274	Insert	4	
266	207561244	Hex. Flanged Screw M6 X 12, Scotch Grip	4	
270	706001104	Solenoid Valve	1	
275	250000546	Oval Head Torx Screw K60 X 1	2	
285	207661644	Hex. Flanged Screw M6 X 16	2	
286	233261414	Hex. Flanged Elastic Nut M6	2	
320	706001134	Bracket Ass'y	1	Inclus 320 to 320c
320a	706001143	Hose, Polyurethane 4 mm	1	
320b	250100124	Hex. Nut With Nylon 1/2" X 20	1	
320c	414811400	O-Ring	1	
325	390406500	Pop Rivet 3/16"	4	
326	517124300	Washer	4	
340	415080300	Fuel Line	1	
345	293650053	Crimp Clamp	4	
350	706001141	Air Filter	1	
360	415080300	Fuel Line	1	
365	293650195	Clamp, Oetiker	1	
370	415080200	Hose, Polyurethane	1	
375	293710035	Straight Fitting	1	
400	706000808	Auxiliary Hose	1	
410	706001144	Pressure Distributor Ass'y	1	Inclus 410 to 410c
410a	706001145	Hose, Polyurethane 6 mm	1	
410b	706001145	Hose, Polyurethane 6 mm	1	
410c	706001143	Hose, Polyurethane 4 mm	1	
415	705600040	Open Clamp	2	
430	705601036	Hose Bracket	1	
435	390406500	Pop Rivet 3/16"	1	
440	706001169	Rear Shocks Distributor Ass'y	1	Inclus 440 to 440b
440a	706000806	T-Fitting	1	
440b	706001143	Hose, Polyurethane 4 mm	1	
455	706201524	Tank Bracket	1	
460	515176044	Battery Strap	2	
480	293750002	Tie-Rap 142 mm	1	
490	293450274	Insert	4	
500	293650218	Hose Retainer	1	
510	414115200	Tie-Rap 180 mm	1	

COMMANDER 2013 LTD 1000 / Body And Accessories

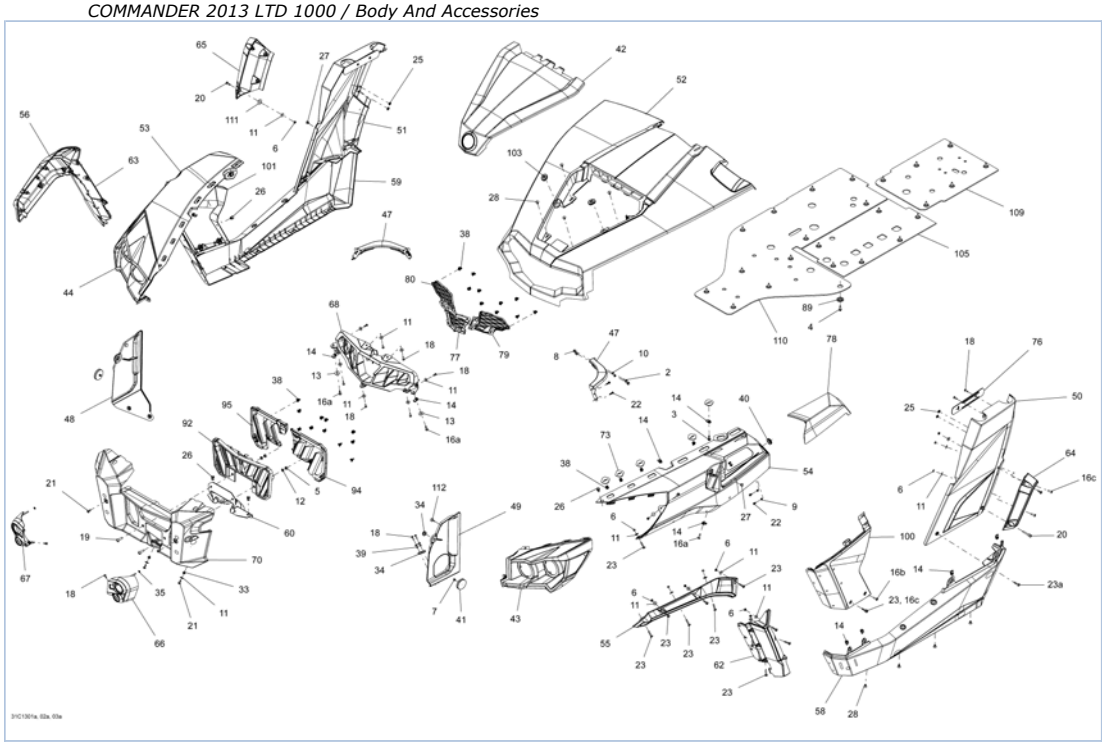

Part List

COMMANDER 2013 LTD 1000 / Body And Accessories

ITEM	PART NUMBER	PART NAME	QUANTITY	REMARKS
2	207661644	Hex. Flanged Screw M6 X 16	4	
3	207662044	Hex. Flanged Screw M6 X 20	2	
4	210262080	Hex. Forming Screw M6 X 20	24	
5	N/A	Not available for this vehicle	-	
6	232561434	Elastic Stop Nut M6	AR	
7	233251414	Hex. Flanged Elastic Nut M5	2	
8	233261414	Hex. Flanged Elastic Nut M6	AR	
9	234051410	Flat Washer M5	4	
10	234061600	Flat Washer M6, Stainless	4	
11	234062670	Flat Washer	AR	
12	N/A	Not available for this vehicle	-	
13	234082410	Flat Washer 8 mm	2	
14	250000048	Pannel Nut M6 X 1.0	AR	
18	250000146	Truss Head Torx Screw K50 X 16	AR	
19	N/A	Not available for this vehicle	-	
20	250000215	Torx Screw M6 X 45	AR	
21	250000261	Torx Screw M6 X 16	4	
22	250000297	Truss Head Torx Screw K50 X 20	AR	
23	250000371	Torx Screw M6 X 30 Stainless	AR	LTD
25	250100129	Push Nut	5	LTD
26	293150089	Tuflok Plastic Rivet	AR	
27	293150104	Pop Rivet 3/16"	2	
28	293150104	Pop Rivet 3/16"	AR	
33	293450274	Insert	2	
34	293720053	Grommet	6	
35	N/A	Not available for this vehicle	-	
38	517302785	Clip	AR	
39	517303439	Knob	4	
40	517303756	Grommet	1	
41	705002409	Reflector, Amber	2	
42	705007076	Removable Hood, Magnesium	1	Magnesium
42	705007077	Removable Hood, White	1	White
43	705002885	LH Front Facia	1	
44	705002886	RH Front Facia	1	
47	705002891	Facia Front Support	2	
48	705005113	LH Deflector	1	LTD
49	705002894	RH Deflector	1	
50	705006126	LH Rear Lateral Pannel, Magnesium	1	Magnesium
50	705006744	LH Rear Lateral Pannel, White	1	White
51	705006127	RH Rear Lateral Pannel, Magnesium	1	Magnesium
51	705006745	RH Rear Lateral Pannel, White	1	White
52	705005289	Fixed Hood, Magnesium	1	Magnesium
52	705006036	Fixed Hood, White	1	White
53	705006773	RH Front Fender, Magnesium	1	Magnesium
53	705006775	RH Front Fender, White	1	White
54	705006772	LH Front Fender, Magnesium	1	Magnesium
54	705006774	LH Front Fender, White	1	White
55	705003058	LH Upper Front Mudguards	1	LTD
56	705003059	RH Upper Front Mudguards	1	LTD
58	705006993	LH Middle Side Pannel	1	LTD

59	705006994	RH Middle Side Pannel	1	LTD
60	N/A	Not available for this vehicle	-	
62	705003601	LH Lower Front Mudguards	1	LTD
63	705003602	RH Lower Front Mudguards	1	LTD
64	705003605	LH Lower Rear Mudguards	1	LTD
65	705003606	RH Lower Rear Mudguards	1	LTD
66	N/A	Not available for this vehicle	-	
67	N/A	Not available for this vehicle	-	
68	705003629	Upper Facia, Black	1	
70	705003306	FRONT FACIA	1	
73	705003841	Support Plate	12	
76	705004261	Support Plate	2	
77	705004336	Center Upper Facia Protector	1	
78	705005287	CVT Inlet Cover, Magnesium	1	Magnesium
78	705006054	CVT Inlet Cover, White	1	White
79	705004350	LH Upper Facia Protector	1	
80	705004351	RH Upper Facia Protector	1	
89	705004510	Cup	24	
92	705004755	Lower Front Facia Protector	1	
94	705004819	LH Lower Rear Facia Protector	1	
95	705004820	RH Lower Rear Facia Protector	1	
100	705006037	LH Front Lateral Pannel, White	1	White
100	705006382	LH Front Lateral Pannel, Magnesium	1	Magnesium
101	705006059	RH Front Lateral Pannel, White	1	White
101	705006383	RH Front Lateral Pannel, Magnesium	1	Magnesium
103	705005156	Oval Washer	2	
105	705006075	RH Protector Plate	1	
109	705006074	Rear Protector Plate	1	
110	705005415	LH Protector Plate	1	
111	706200281	HARDENED WASHER	1	LTD
112	708000759	Rubber Stopper	2	
16a	250000128	Torx Truss Screw M6 X 20	2	
16b	250000350	Torx Truss Screw M6 X 20	2	
16c	250000488	Torx Truss Screw M6 X 20	2	LTD
16c	250000488	Torx Truss Screw M6 X 20	7	LTD
23a	250000398	Stainless Torx Screw,Nylon Patch,M6 X 30	2	

COMMANDER 2013 LTD 1000 / Body And Accessories Kit

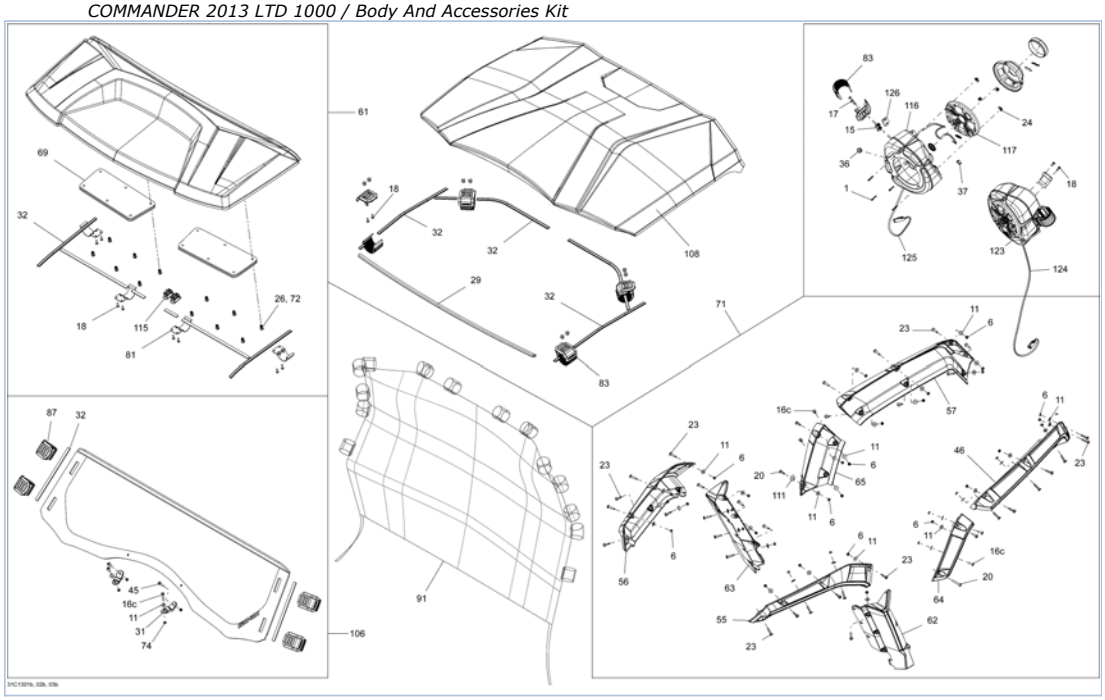

Part List

COMMANDER 2013 LTD 1000 / Body And Accessories Kit

ITEM	PART NUMBER	PART NAME	QUANTITY	REMARKS
1	205042560	Socket Head Screw M4 X 25	8	LTD
6	232561434	Elastic Stop Nut M6	AR	LTD
11	234062670	Flat Washer	AR	LTD
15	250000079	Panel Nut M5 X 0.8	AR	LTD
16c	250000488	Torx Truss Screw M6 X 20	7	LTD
16c	250000488	Torx Truss Screw M6 X 20	2	LTD
17	250000130	Torx Screw M5 X 20	AR	LTD
18	250000146	Truss Head Torx Screw K50 X 16	AR	LTD
20	250000215	Torx Screw M6 X 45	AR	LTD
23	250000371	Torx Screw M6 X 30 Stainless	AR	LTD
24	250100143	Extruded Panel Nut M4 X 0.7	8	LTD
26	293150089	Tuflok Plastic Rivet	AR	LTD
29	293200136	Seal, Meter	AR	LTD
31	705005776	Windshield Support	2	LTD
32	293250087	Gasket, Neoprene	AR	LTD
36	414036300	Grommet	2	LTD
37	414227300	Clip	2	LTD
45	250000284	Torx Screw M6 X 25	2	LTD
46	705003603	LH Upper Rear Mudguards	1	LTD
55	705003058	LH Upper Front Mudguards	1	LTD
56	705003059	RH Upper Front Mudguards	1	LTD
57	705003604	RH Upper Rear Mudguards	1	LTD
61	705005669	Roof Visor Ass.	1	LTD
62	705003601	LH Lower Front Mudguards	1	LTD
63	705003602	RH Lower Front Mudguards	1	LTD
64	705003605	LH Lower Rear Mudguards	1	LTD
65	705003606	RH Lower Rear Mudguards	1	LTD
69	280000496	Visor Pocket	2	LTD
71	715001013	Fender Extension Kit	1	LTD
72	705005658	Visor Fastener Kit	1	LTD
74	233261494	Hex. Elastic Flanged Nut M6	4	LTD
81	705004430	"U" BRACKET	4	LTD
83	705005719	Velcro Strap	4	LTD
87	705005720	Perforated Velcro Strap	4	LTD
91	715001193	Rear Net Wind Deflector Ass'y	1	LTD
106	705005671	Half Windshield Ass'y	1	LTD
108	705005670	Mid Roof Kit	1	LTD
111	706200281	HARDENED WASHER	1	LTD
115	710001999	Plug Carling	2	LTD
116	710002839	RH Speaker Box Ass'y	1	
117	710002838	SPEAKER	2	
123	710002837	LH Speaker Box Ass'y	1	
124	710002857	Speaker Harness	1	LTD
125	710002857	Speaker Harness	1	LTD
126	710002946	M5 Support Plate	2	LTD

COMMANDER 2013 LTD 1000 / Cab Interior

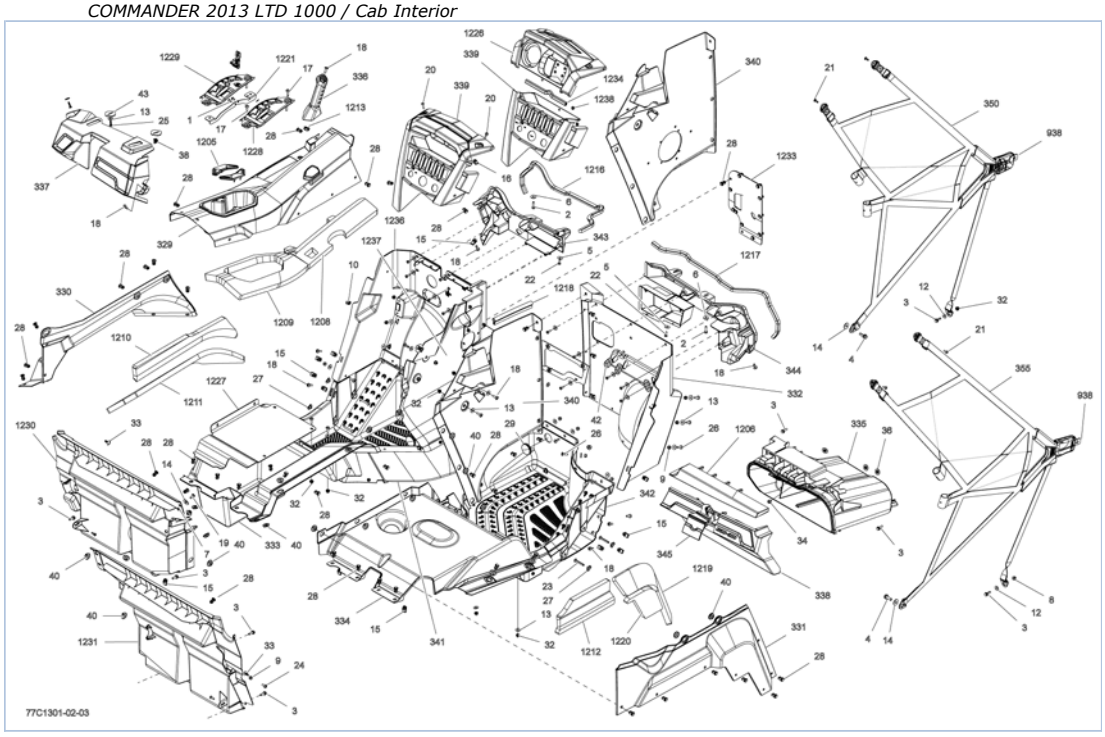

Part List

COMMANDER 2013 LTD 1000 / Cab Interior

ITEM	PART NUMBER	PART NAME	QUANTITY	REMARKS
1	N/A	Not available for this vehicle	-	
2	207162544	Hex. Screw M6 X 25	2	
3	207662034	Hex. Flanged Screw	6	
4	207682544	Hex. Flanged Screw M8 X 25	2	
5	224060201	Flat Washer	1	
6	224061201	Flat Washer	2	
7	232061600	Hex. Nut M6	2	
8	233261414	Hex. Flanged Elastic Nut M6	1	
9	233261494	Hex. Elastic Flanged Nut M6	10	
10	233281414	Hex. Flanged Elastic Nut M8	2	
12	234062410	Flat Washer 6 mm	2	
13	234062670	Flat Washer	6	
14	234082410	Flat Washer 8 mm	4	
15	250000048	Pannel Nut M6 X 1.0	2	
16	250000079	Panel Nut M5 X 0.8	2	
17	250000081	Torx Screw M6 X 25	2	
18	250000128	Torx Truss Screw M6 X 20	1	
19	250000129	Torx Screw M6 X 16	2	
20	250000130	Torx Screw M5 X 20	2	
21	250000145	Torx Screw M5 X 14	4	
22	250000146	Truss Head Torx Screw K50 X 16	1	
23	250000215	Torx Screw M6 X 45	2	
24	250000261	Torx Screw M6 X 16	1	
25	250000297	Truss Head Torx Screw K50 X 20	2	
26	250000335	Socket Head Screw M6 X 20	9	
27	293100003	Nut M6	2	
28	293150089	Tuflok Plastic Rivet	2	
29	293250242	Rubber Cover	1	
32	293450274	Insert	10	
33	293730011	Dart, Black	1	
34	293830005	Rubber Plug	1	
36	414859400	Cap	3	
38	517302785	Clip	1	
40	705003264	Grommet	3	
42	705003668	Oblong Grommet	4	
43	705003841	Support Plate	2	
329	715001247	Central Console Ass'y	1	
329	N/A	Not available for this vehicle	-	
330	707900001	LH Side Console	1	
331	707900002	RH Side Console	1	
332	707900004	RH Front Floor	1	
333	707900153	LH Under Cover Ass'y	-	
333	707900158	LH Under Cover Ass'y	1	
334	707900006	RH Under Cover Ass'y	1	
335	707900046	Storage Bin	1	LTD
336	707900011	Passenger Handle	1	
337	715001250	Dashboard Ass'y	1	
338	715001263	Bin Cover Ass'y	1	
339	707900065	Lower Central Dashboard Ass'y	1	LTD
339	N/A	Not available for this vehicle	-	
340	707900098	RH Fixe Side Console	1	LTD
341	707900022	LH Lower Floor	1	
342	707900023	RH Lower Floor	1	

343	707900029	LH Floor Support	1	
344	707900030	RH Floor Support	1	
345	707900031	Latch	1	
350	707900127	LH Lateral Net	1	
355	707900128	RH Lateral Net	1	
938	707900035	Buckle	1	
1205	707900036	Cup Retainer	2	
1206	707900062	Trim Glove Box	1	
1208	707900041	Front Central Console Foam	1	
1209	707900042	Rear Central Console Foam	1	
1210	707900043	LH Upper Lateral Console Foam	1	
1211	707900044	LH Lower Lateral Console Foam	1	
1212	707900045	RH Lateral Console Foam	1	
1213	707900048	CONNECTOR TUBE	1	
1216	293200093	Neoprene Seal	AR	
1217	293200093	Neoprene Seal	AR	
1218	293250240	Neoprene Seal	AR	
1219	707900055	RH Lateral Console Foam	1	
1220	707900056	RH Lateral Console Foam	1	
1221	N/A	Not available for this vehicle	-	
1226	707900066	Gauge Support	1	
1227	707900069	Under Cover Seat	1	
1228	707900070	LEVER INDICATOR	1	
1228	N/A	Not available for this vehicle	-	
1229	707900070	LEVER INDICATOR	1	
1229	N/A	Not available for this vehicle	-	
1230	707900095	LH Rear Deflector	1	
1230	707900092	LH Rear Deflector	-	
1231	707900094	RH Rear Deflector	1	
1233	707900125	Deflector	1	
1234	707900109	Protection Trim	1	LTD
1236	707900134	LH Front Floor	1	
1237	707900137	LH Lateral Console	1	LTD
1238	732610072	Push Nut	3	LTD

COMMANDER 2013 LTD 1000 / Decals

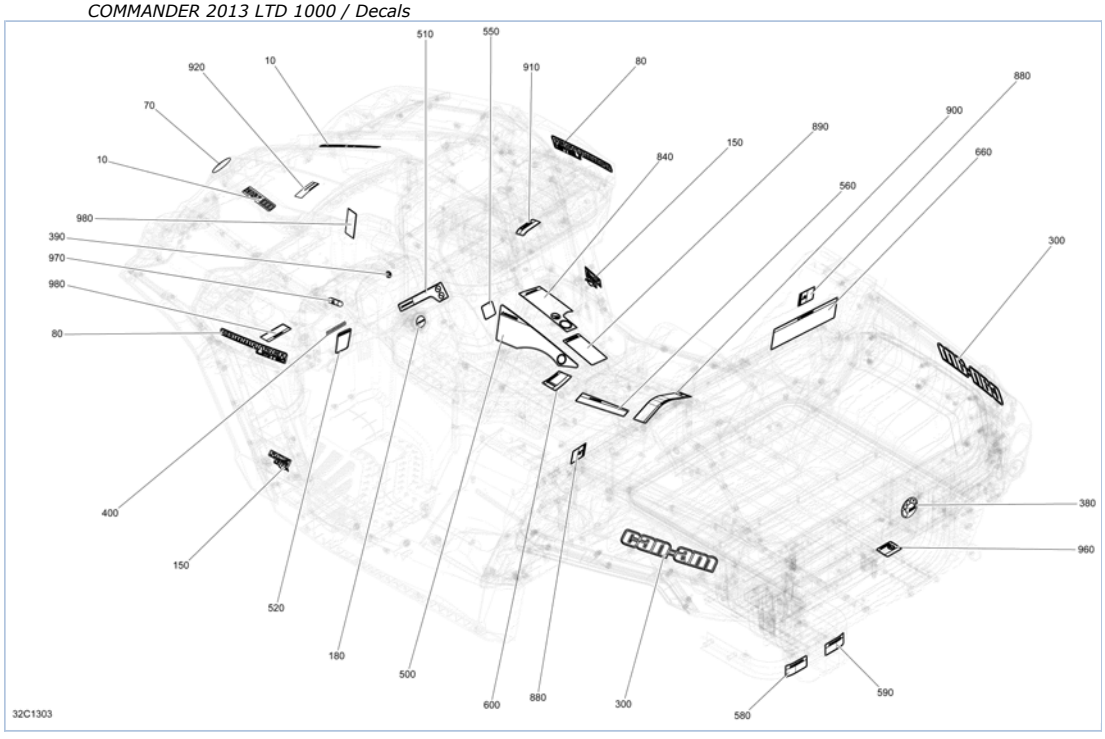

Part List

COMMANDER 2013 LTD 1000 / Decals

ITEM	PART NUMBER	PART NAME	QUANTITY	REMARKS
10	704902853	Hood Decal, Rotax 1000	2	Magnesium Model
10	704902997	Hood Decal, Rotax 1000	2	Hybrid White Model
70	219902469	Logo BRP, 68 mm	1	
80	704903002	Lateral Decal, Commander Limited	2	Hybrid White Model
80	704903030	Lateral Decal, Commander Limited	2	Magnesium Model
150	704902871	Decal, ACS Fox	2	Magnesium Model
150	704903003	Decal, ACS Fox	2	Hybrid White Model
180	704902065	Logo Can-Am, 35 mm	1	
300	704902717	Decal, Can-Am	2	Magnesium Model
300	704903001	Decal, Can-Am	2	Hybrid White Model
380	219902469	Logo BRP, 68 mm	1	
390	219902677	Logo BRP, 20 mm	1	
400	704901558	Decal, Dynamic Power Steering	1	
500	704902328	Warning Decal, Death And Injuries	1	Except Europe
500	N/A	Not available for this vehicle	1	
510	704902414	Warning Decal, Responsible	1	
520	704902332	Warning Decal, Vehicle	1	
550	704902407	Decal, Public Roads Use	1	Except Europe
560	704902334	Warning Decal, Tire Pressure	1	Except Europe
560	N/A	Not available for this vehicle	1	
580	704902336	Warning Decal, Towing	1	Except Europe
580	N/A	Not available for this vehicle	1	
590	704902345	Warning Decal, Trailer	1	
600	704902338	Warning Decal, Transmission	1	
660	704902343	Warning Decal, Cargo Box	1	
840	704902347	Warning Decal, Passenger	1	
880	704902350	Warning Decal, Injury	2	
890	N/A	Not available for this vehicle	1	
900	704902422	Warning Decal, Multilingual	1	Except North America
910	704902434	Caution Decal, Maximum Load	1	
920	707800373	Decal, Air Filter Maintenance	1	
960	704902420	Warning Decal, MAX 100 kg/222 lb	1	
970	704903434	Notice Decal, Steering	1	Except STD
980	704903515	Warning Decal, Ground And DPS	2	

COMMANDER 2013 LTD 1000 / Frame

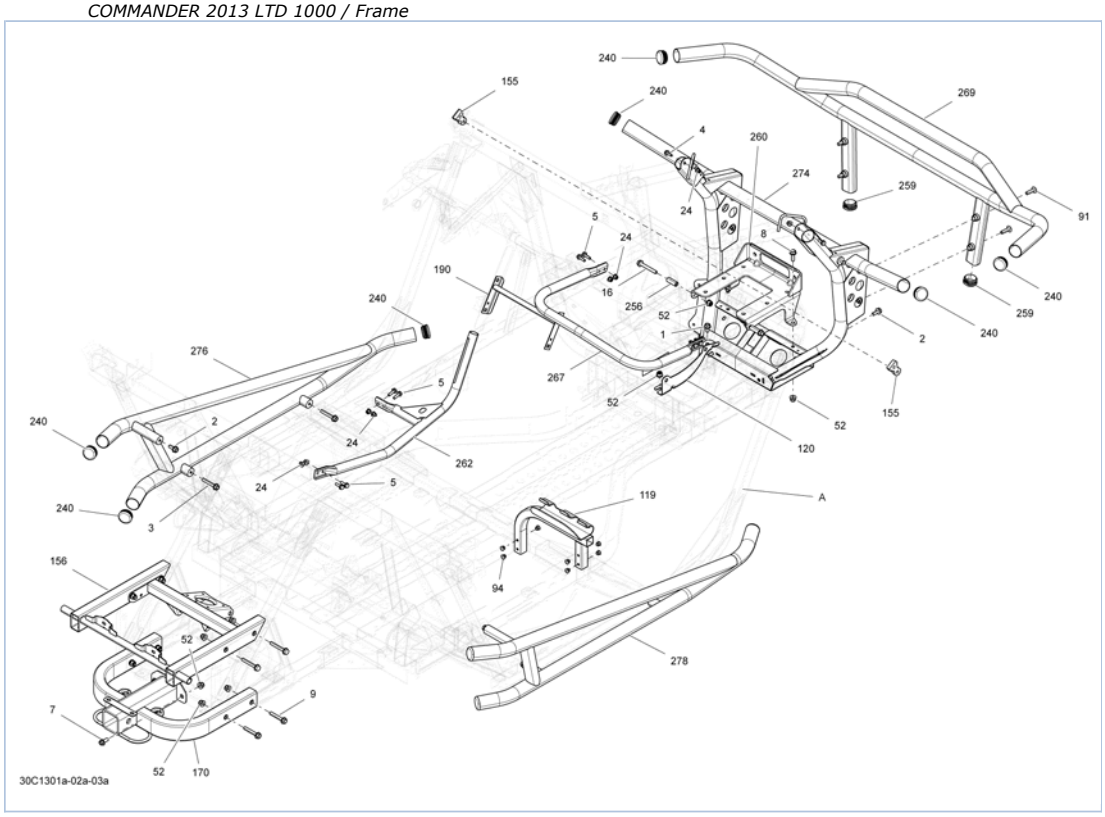

Part List

COMMANDER 2013 LTD 1000 / Frame

ITEM	PART NUMBER	PART NAME	QUANTITY	REMARKS
1	207581644	Hex. Flanged Screw M8 X 16, Scotch Grip	1	
2	207582044	Hex. Flanged Screw M8 X 20, Scotch Grip	AR	
3	N/A	Not available for this vehicle	2	
4	207661644	Hex. Flanged Screw M6 X 16	2	
5	207662044	Hex. Flanged Screw M6 X 20	4	
7	207682044	Hex. Flanged Screw M8 X 20	2	
8	207682544	Hex. Flanged Screw M8 X 25	2	
9	207685044	HEX. FLANGED SCREW M8 X 50	4	
16	207686044	Hex. Flanged Screw M8 x 60	2	
24	233261414	Hex. Flanged Elastic Nut M6	6	
52	233281414	Hex. Flanged Elastic Nut M8	11	
91	250000197	Torx Truss Screw M8 X 30	4	
94	293150096	Hemlock Rivet, 6.5 mm	7	
119	715001721	Frame Ass'y	1	
120	705201721	Front Differential Support	1	
155	705202129	Binding Plate	2	
156	705202165	Box holder	1	
170	715001251	Trailer Hitch Ass'y	1	
190	705202463	Panel Reinforcement	1	
240	705202455	Cap	2	
256	705202499	Bushing	2	
259	N/A	Not available for this vehicle	2	
260	715000704	WINCH PLATE	1	
262	705202946	Console Handle	1	
267	705202950	Passenger Handle	1	
269	715000958	Front Bumper, XT, X	1	
274	705202995	Front Bumper	1	
276	N/A	Not available for this vehicle	1	
278	N/A	Not available for this vehicle	1	
A	715001721	Frame Ass'y	1	

COMMANDER 2013 LTD 1000 / Frame Safety Cage

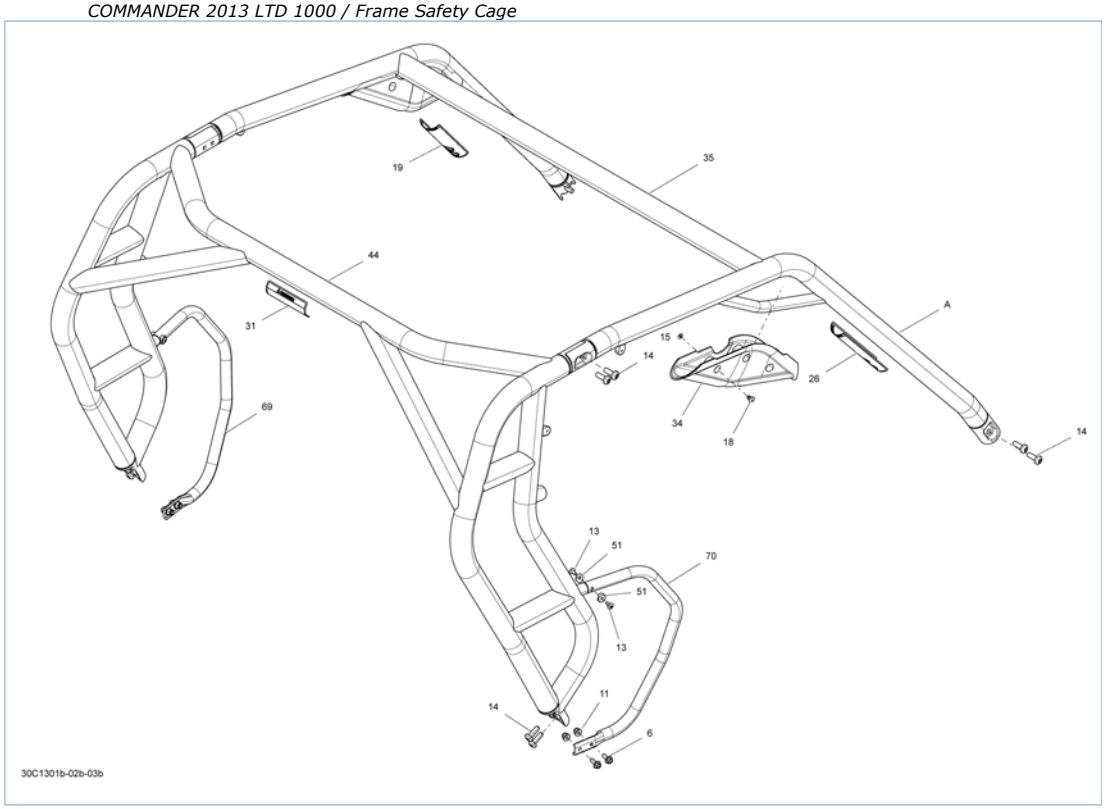

Part List

COMMANDER 2013 LTD 1000 / Frame Safety Cage

ITEM	PART NUMBER	PART NAME	QUANTITY	REMARKS
6	207682044	Hex. Flanged Screw M8 X 20	4	
11	233281414	Hex. Flanged Elastic Nut M8	4	
13	250000439	Torx Truss Screw M6 X 14	4	
14	250000624	Screw Torx M10 X 30	12	
15	250200121	Flat Washer	6	
18	293150108	Pop Rivet 3/16"	6	
19	704902413	Warning Label	1	
26	704902415	Warning Label	1	
31	704902424	Warning Label	1	
34	705004985	LH Cage Cap Moulding	1	
34	705004986	RH Cage Cap Moulding	1	
35	XXX	Front Cage	1	
44	XXX	Rear Cage	1	
51	705202223	Offset Washer	4	
69	705202944	LH Side Protecting Tube	1	
70	705202943	RH Side Protecting Tube	1	
A	705203074	Cage Kit	1	

COMMANDER 2013 LTD 1000 / Mirrors And Tools

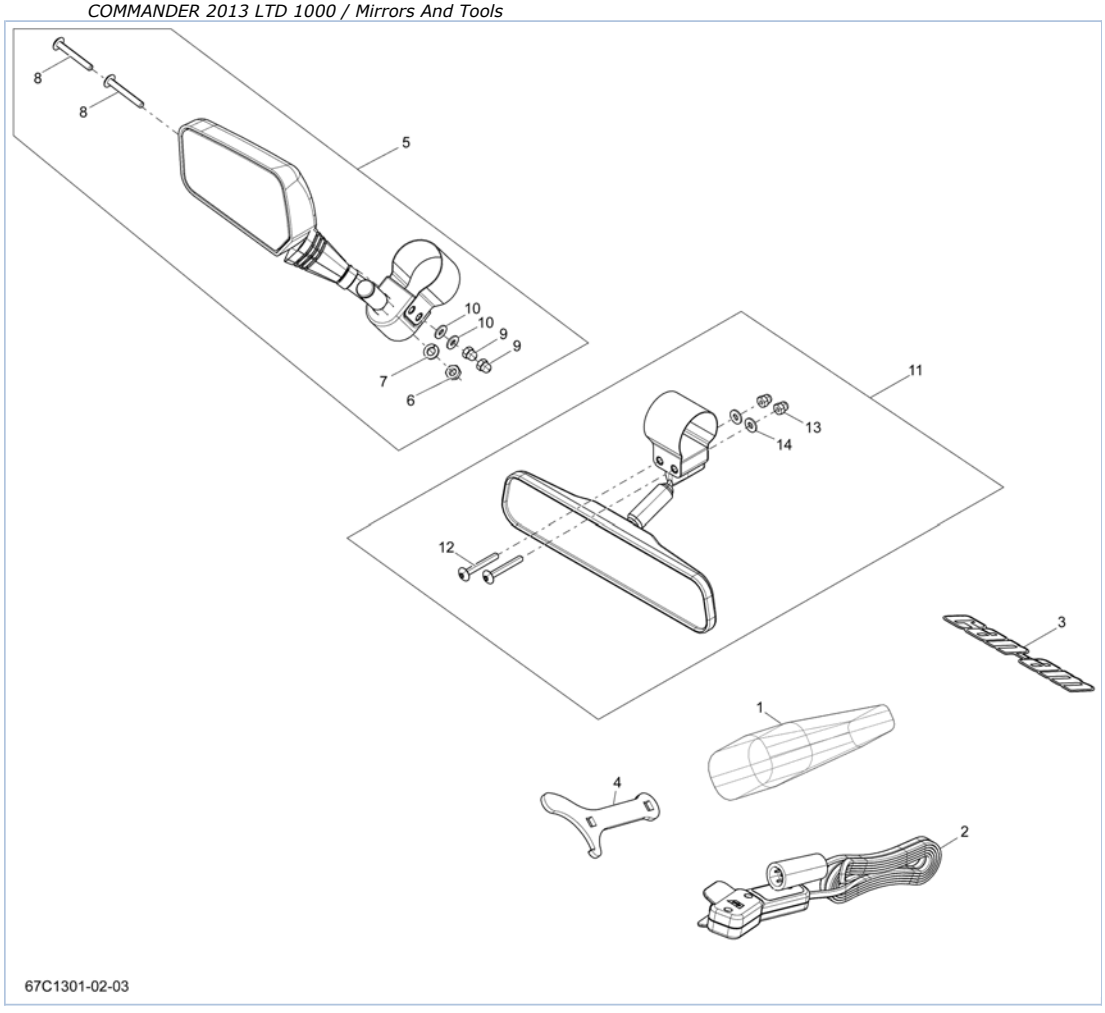

Part List

COMMANDER 2013 LTD 1000 / Mirrors And Tools

ITEM	PART NUMBER	PART NAME	QUANTITY	REMARKS
1	704700148	Tool Kit	1	
2	710001002	Remote Control	1	LTD
3	N/A	Not available for this vehicle	-	
4	N/A	Not available for this vehicle	-	
5	N/A	Not available for this vehicle	-	
6	N/A	Not available for this vehicle	-	
7	N/A	Not available for this vehicle	-	
8	N/A	Not available for this vehicle	-	
9	N/A	Not available for this vehicle	-	
10	N/A	Not available for this vehicle	-	
11	N/A	Not available for this vehicle	-	
12	N/A	Not available for this vehicle	-	
13	N/A	Not available for this vehicle	-	
14	N/A	Not available for this vehicle	-	

COMMANDER 2013 LTD 1000 / Rear Cargo Box

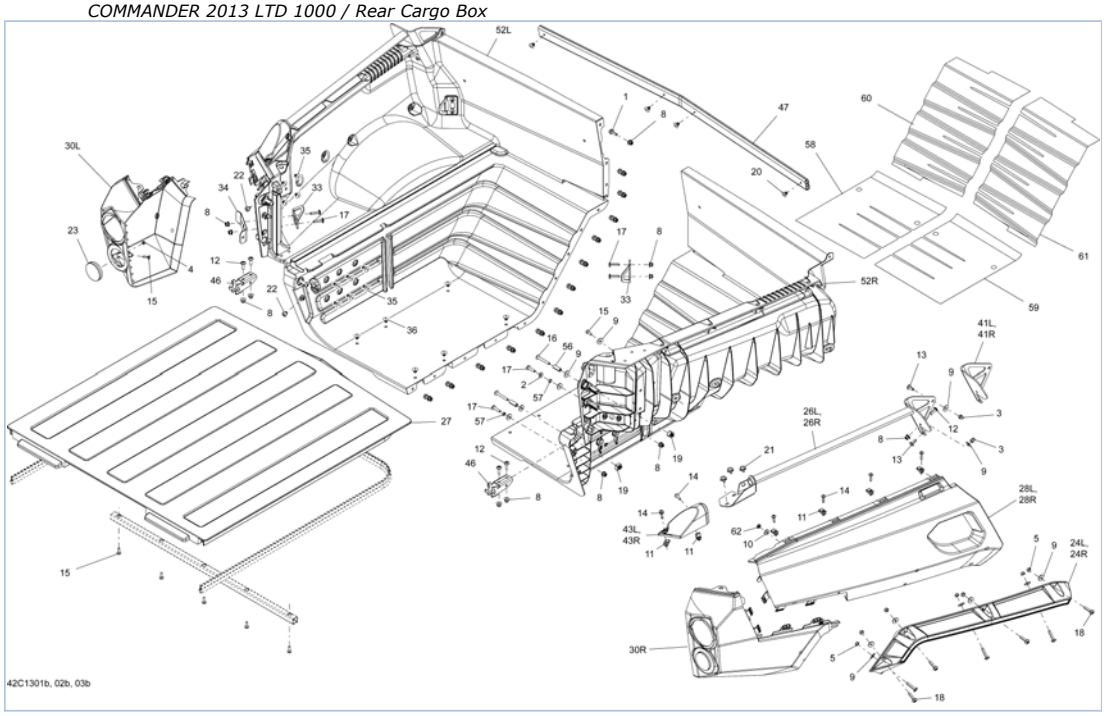

Part List

COMMANDER 2013 LTD 1000 / Rear Cargo Box

ITEM	PART NUMBER	PART NAME	QUANTITY	REMARKS
1	207662044	Hex. Flanged Screw M6 X 20	13	
2	224061121	Flat Washer	2	
3	232361493	Domed Nut M6	4	
4	232551414	Elastic Stop Nut M5	2	North America, International
5	232561434	Elastic Stop Nut M6	14	LTD
8	233261414	Hex. Flanged Elastic Nut M6	31	
9	234062670	Flat Washer	27	
10	234081100	Flat Washer 8 mm, Nylon	2	
11	250000079	Panel Nut M5 X 0.8	10	
11	250000079	Panel Nut M5 X 0.8	2	LTD
12	250000128	Torx Truss Screw M6 X 20	6	
13	250000129	Torx Screw M6 X 16	12	
14	250000130	Torx Screw M5 X 20	10	
14	250000130	Torx Screw M5 X 20	2	LTD
15	250000146	Truss Head Torx Screw K50 X 16	15	
16	250000215	Torx Screw M6 X 45	4	
17	250000284	Torx Screw M6 X 25	12	
18	250000371	Torx Screw M6 X 30 Stainless	14	LTD
19	269500725	Nut Housing Ass'y	4	
20	293150104	Pop Rivet 3/16"	4	
21	293150190	POP RIVET 3/16	6	LTD
22	293830005	Rubber Plug	4	
23	N/A	Not available for this vehicle	-	
24L	705003603	LH Upper Rear Mudguards	1	LTD
24R	705003604	RH Upper Rear Mudguards	1	LTD
26L	708300231	LH Welded Rail	1	LTD
26R	708300232	RH Welded Rail	1	LTD
27	708300131	Separator Pannel Ass'y	1	
28L	708300548	LH Rear Fender, Magnesium	1	Magnesium
28L	708300671	LH Rear Fender, White	1	White
28R	708300550	RH Rear Fender, Magnesium	1	Magnesium
28R	708300670	RH Rear Fender, White	1	White
30L	708300103	LH Rear Facia	-	
30L	708300103	LH Rear Facia	1	LTD
30L	N/A	Not available for this vehicle	-	
30R	708300104	RH Rear Facia	-	
30R	708300104	RH Rear Facia	1	LTD
30R	N/A	Not available for this vehicle	-	
33	708300183	Retaining Plate	4	
34	708300206	Retaining Plate Support	2	
35	293150100	Pop Rivet 3/16"	20	
36	293150104	Pop Rivet 3/16"	12	
41L	N/A	Not available for this vehicle	-	
41R	N/A	Not available for this vehicle	-	
43L	708300233	LH Rail Cover	1	LTD
43R	708300234	RH Rail Cover	1	LTD
46	708300345	Upper Pivot Support	2	
47	708300346	Front Support	1	
52L	715001259	LH Box Ass'y	1	
52R	715001257	RH Box Ass'y	1	
56	708300736	Spacer	4	
57	708300737	Bushing	4	
58	708300809	Heat Deflector Sheet	1	
59	708300810	Heat Deflector Sheet	1	

60	708300811	Heat Deflector Sheet	1	
61	708300812	Heat Deflector Sheet	1	
62	732610072	Push Nut	2	

COMMANDER 2013 LTD 1000 / Rear Cargo Box Doors

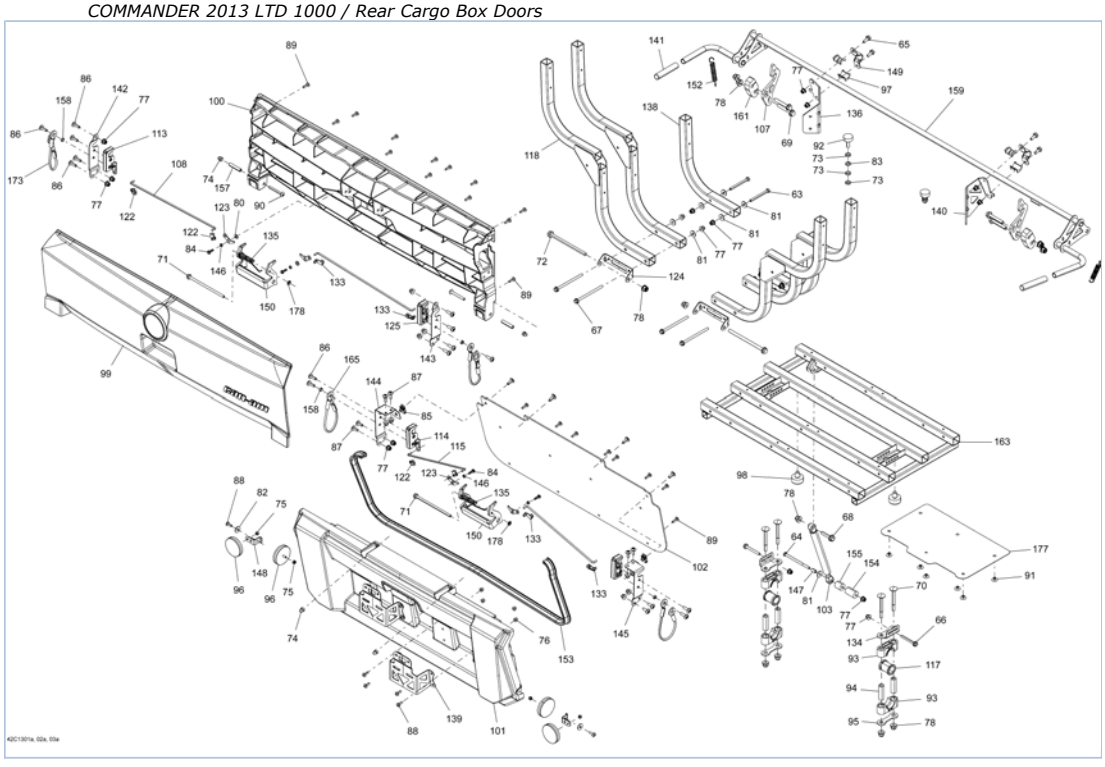

Part List

COMMANDER 2013 LTD 1000 / Rear Cargo Box Doors

ITEM	PART NUMBER	PART NAME	QUANTITY	REMARKS
63	207066544	Hex. Screw M6 x 65	4	
64	207069044	Hex. Screw M6 X 90	1	
65	207661644	Hex. Flanged Screw M6 X 16	4	
66	207665044	Hex. Flanged Screw M6 X 50	2	
67	207669584	Hex. Flanged Screw M6 X 95	4	
68	207683544	Hex. Flanged Screw M8 X 35	1	
69	207684586	Hex. Flanged Screw M8 X 45, Scotch Grip	4	
70	207787044	Carriage Bolt M8 X 70	4	
71	230663084	HEX. FLANGED SCREW M6 X 130	2	
72	230683034	Hex. Flanged Screw M8 X 130	2	
73	232180600	HEX. JAM NUT M8	6	
74	232361493	Domed Nut M6	2	
75	232551414	Elastic Stop Nut M5	4	
76	N/A	Not available for this vehicle	8	
77	233261414	Hex. Flanged Elastic Nut M6	13	
78	233281414	Hex. Flanged Elastic Nut M8	AR	
80	234061410	Flat Washer 6 mm	2	
81	234062410	Flat Washer 6 mm	12	
82	234062670	Flat Washer	AR	
83	234181401	Lock Washer 8 mm	2	
84	241151640	Hex. Flanged Screw K50 X 16	4	
85	250000048	Pannel Nut M6 X 1.0	2	
86	250000128	Torx Truss Screw M6 X 20	2	
87	250000129	Torx Screw M6 X 16	4	
88	N/A	Not available for this vehicle	AR	
89	250000146	Truss Head Torx Screw K50 X 16	AR	
90	250000239	Torx Truss Screw M6 X 50	2	
91	293150103	Pop Rivet 3/16"	6	
92	293720091	Frame Rubber Bumper	2	
93	506150400	Housing Half	4	
94	506150500	Housing Bushing	4	
95	506150600	Stopper Plate	2	
96	705002408	Reflector, Red	4	North America, International
97	705500033	Half Ring	4	
98	708000884	Rubber Stopper	2	
99	708300552	Outside Top Pannel, Magnesium	1	Magnesium
99	708300672	Outside Top Pannel, White	1	White
100	708300053	Inside Top Pannel	1	
101	715001255	Lower Panel Ass'y	1	
102	708300073	Inside Bottom Pannel	1	
103	708300512	GAZ SHOCK	1	
107	708300136	Box Retainer	2	
108	708300160	Top Rod	2	
113	708300162	LH Latch	2	
115	708300164	Lower Bottom Rod	2	
117	708300172	Pivot Bushing	2	
118	708300174	Welded Lateral Support, Black	4	
122	708300182	LH Tie Rod Clip	4	
123	708300184	Activator	4	
124	708300185	BRACKET PIVOT	2	

125	708300201	RH Latch	2	
133	708300202	RH Tie Rod Clip	2	
134	708300210	Adjustable Stopper Plate	2	
135	708300219	Spring	2	
136	708300278	LH Latch Lever Support	1	
138	708300340	Lateral Support, Black	2	
139	N/A	Not available for this vehicle	2	
140	708300351	RH Latch Lever Support	1	
141	708300358	Cap Latch Lever	2	
142	708300359	LH Upper Support	1	
143	708300360	RH Upper Support	1	
144	708300361	LH Lower Support	1	
145	708300362	RH Lower Support	1	
146	708300365	Bushing	4	
147	708300366	Bushing	1	
148	N/A	Not available for this vehicle	2	
149	708300392	Clamp Reatiner	2	
150	708300398	Handle	2	
152	708300454	Spring	2	
153	293250240	Neoprene Seal	AR	
154	708300470	Spacer	1	
155	708300471	Spacer	1	
157	708300735	Bushing	2	
158	708300737	Bushing	4	
159	708300751	Cargo Handle Ass'y	1	
161	708300754	Spacer	2	
163	708300758	Welded Box Support	1	
165	708300762	Lower Retainer Cable	2	
173	708300763	Upper Retainer Cable	2	
177	708300780	Heat Deflector	1	
178	732610072	Push Nut	2	

COMMANDER 2013 LTD 1000 / Seat

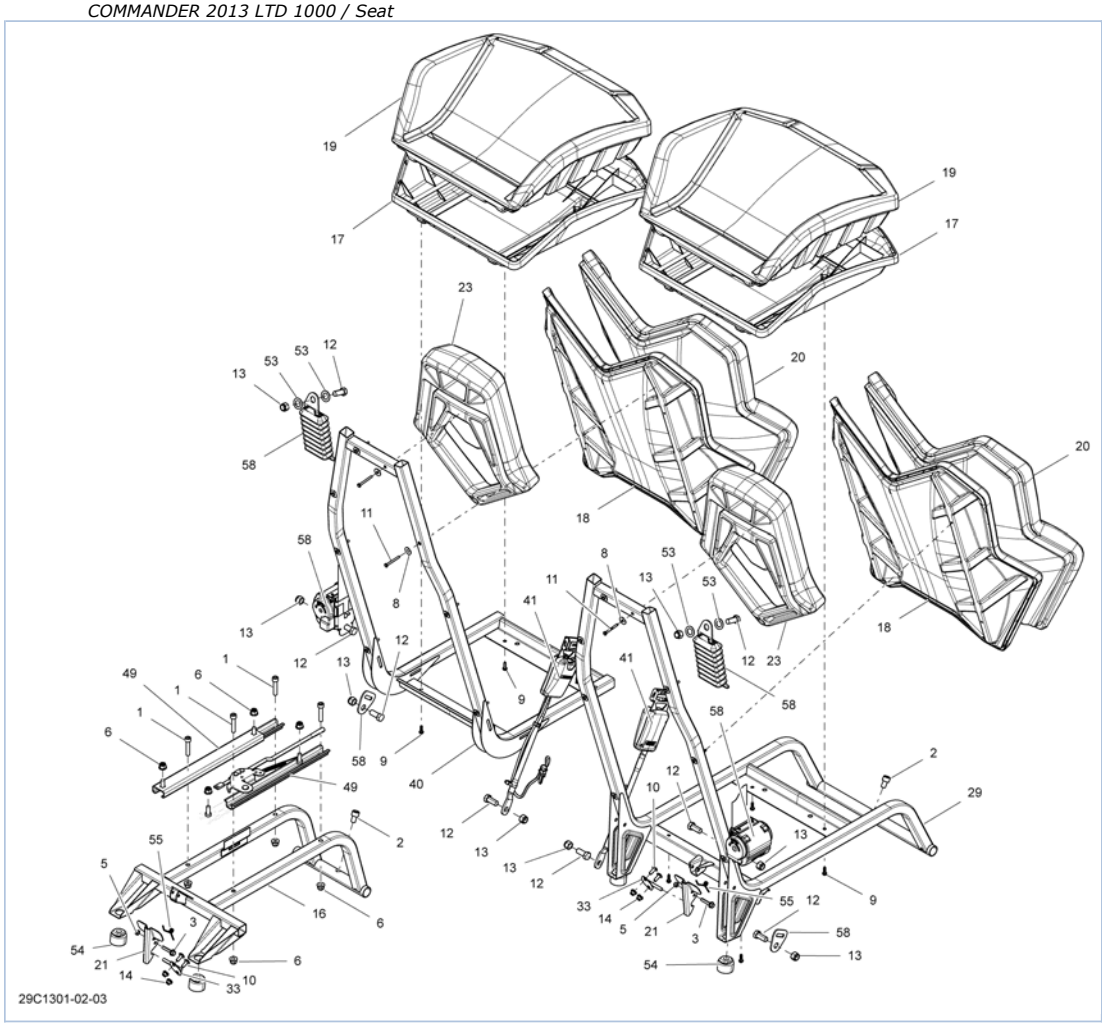

Part List

COMMANDER 2013 LTD 1000 / Seat

ITEM	PART NUMBER	PART NAME	QUANTITY	REMARKS
1	205084044	Socket Head Screw M8 X 40	4	
2	205501644	Socket Screw M10 X 16	2	
3	207663044	Hex. Flanged Screw M6 X 30	2	
5	232561600	Hex. Elastic Stop Nut M6	2	
6	233281414	Hex. Flanged Elastic Nut M8	8	
8	234062670	Flat Washer	8	
9	241151640	Hex. Flanged Screw K50 X 16	4	
10	250000223	Torx Screw M6 X 16	4	
11	250000490	Hex. Washer Head Screw PT K50 X 40	8	
12	250000521	Hex. Cap Screw 7/16''X 1''	6	
13	250100135	Nylon Insert Hex. Lock Nut 7/16-20	6	
14	293450274	Insert	4	
16	708000667	Seat Member	1	
17	708001098	Cushion Ass'y., LTD	2	
18	708000933	Backrest Ass'y, LTD	1	
19	708001099	Cover Seat, LTD Model	1	
20	708000935	Backrest Cover LTD	1	
21	708000678	SEAT LATCH	2	
23	708000711	Head Rest	2	
29	708000690	Passenger Seat Frame	1	
33	708000794	Lock Stem	2	
40	708000739	Driver Seat Frame	1	
41	708000844	Passenger Buckle Side	1	
49	708000848	LH Rail	1	
49	708000846	RH Rail	1	
53	708000891	Position Washer	4	
54	708000899	Rubber Bumper	4	
55	708000921	Spring	2	
58	708001108	Safety Belt	2	

COMMANDER 2013 LTD 1000 / Electrical Harness

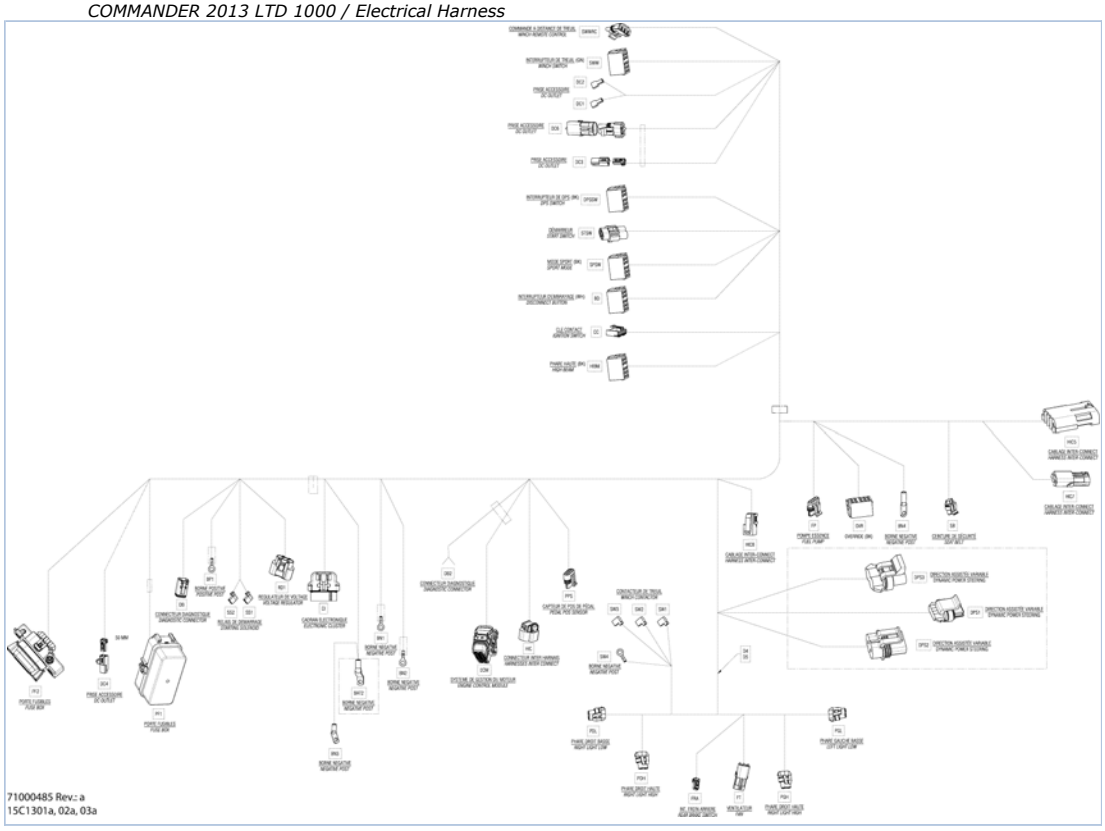

Part List

COMMANDER 2013 LTD 1000 / Electrical Harness

ITEM	PART NUMBER	PART NAME	QUANTITY	REMARKS
1	710002485	Harness Ass'y	1	Includes 1 to SWWRC
BD	293550006	Female Terminal	AR	
BD	710001931	Terminal	AR	
BD	710002001	Housing Connector	AR	
BN1	710000913	Terminal	AR	
BP1	710000913	Terminal	AR	
CA	710001634	Housing	AR	
CA	710001630	Terminal	AR	
CA	710001637	Seal	AR	
CA	710001633	Lock	AR	
CC	710000274	Female Terminal	AR	
CC	710000848	Lock	AR	
CC	710000849	Male Housing, 6 Circuits	AR	
CC	710001635	Terminal	AR	
CI	515175812	Plug	AR	
CI	515175801	Female Housing, 24 Circuits	AR	
CI	515175802	Retainer Block	AR	
CI	515175803	Wire Seal	AR	
CI	710000399	Female Housing	AR	
CI	710001131	Female Terminal	AR	
D2	409012700	Diode	AR	
D4	409012700	Diode	AR	
D5	409012700	Diode	AR	
DB	293000052	Sealing Cap	AR	
DB	515175673	Male Housing, 6 Circuits	AR	
DB	515175678	Male Wedge, 6 Circuits	AR	
DB	278001665	Female Terminal	AR	
DB2	293000052	Sealing Cap	AR	
DB2	515175673	Male Housing, 6 Circuits	AR	
DB2	515175678	Male Wedge, 6 Circuits	AR	
DB2	278001665	Female Terminal	AR	
DC1	293550006	Female Terminal	AR	
DC1	409010800	Female Terminal	AR	
DC2	293550006	Female Terminal	AR	
DC2	710000038	Female Terminal	AR	
DC3	293550006	Female Terminal	AR	
DC3	515175231	Female Terminal	AR	
DC3	515175658	Female Housing, 2 Circuits	AR	
DC3	710000667	Male Housing, 2 Circuits	AR	
DC4	515175231	Female Terminal	AR	
DC4	515175658	Female Housing, 2 Circuits	AR	
DC4	293550006	Female Terminal	AR	
DC4	710000667	Male Housing, 2 Circuits	AR	
DC5	293550006	Female Terminal	AR	
DC5	710001159	Wire Seal	AR	
DC5	710001160	Female Terminal	AR	
DC5	710001157	Housing	AR	
DC5	710001323	Lock	AR	
DC6	409007300	Female Terminal	AR	
DC6	278000217	Female Housing, 2 Circuits	AR	
DC6	278000220	Male Connector, 2 Circuits	AR	
DC6	278000218	Wire Seal	AR	
DC6	278000216	Wire Seal	AR	
DC6	710000992	Clip	AR	
ECM	710001588	Female Terminal Housing, 48	AR	

		Circuits		
ECM	710001589	Female Terminal	AR	
ECM	710001591	Cover	AR	
ECM	710001592	Plug	AR	
ECM	710001593	Plug	AR	
ECM	710001727	Female Terminal	AR	
FP	278001014	Female Terminal	AR	
FP	409209700	Female Housing, 4 Circuits	AR	
FP	278001013	Wire Seal	AR	
FP	710001340	Female Terminal	AR	
FP	515176621	Wire Seal	AR	
FRA	515175231	Female Terminal	AR	
FRA	515175658	Female Housing, 2 Circuits	AR	
FRA	293550006	Female Terminal	AR	
FT	278000217	Female Housing, 2 Circuits	AR	
FT	278000218	Wire Seal	AR	
FT	710000992	Clip	AR	
FT	409004300	Male Terminal	AR	
HIBM	293550006	Female Terminal	AR	
HIBM	710001931	Terminal	AR	
HIBM	710000221	Female Terminal	AR	
HIBM	710002000	Housing	AR	
HIBM2	409007300	Female Terminal	AR	
HIBM2	278000221	Male Connector, 6 Circuits	AR	
HIBM2	278000218	Wire Seal	AR	
HIBM2	278000216	Wire Seal	AR	
HIBM2	278000585	Wire Seal (20 Gauge) (Purple)(Packard)	AR	
HIBM2	270000137	Female Connector, 6 Circuits	AR	
HIBM2	278000223	Female Terminal	AR	
HIC	710001230	Seal	AR	
HIC	710001233	Seal	AR	
HIC	710001229	Terminal	AR	
HIC	710001228	Terminal	AR	
HIC	710001225	Cap	AR	
HIC	710001221	Lock	AR	
HIC	710001928	Housing	AR	
HIC5	278000222	Male Terminal	AR	
HIC5	278000585	Wire Seal (20 Gauge) (Purple)(Packard)	AR	
HIC5	710000992	Clip	AR	
HIC5	278000394	Female Housing, 4 Circuits	AR	
LB1	515175231	Female Terminal	AR	
LB1	515175658	Female Housing, 2 Circuits	AR	
LB1	293550006	Female Terminal	AR	
LB2	515175232	Male Terminal	AR	
LB2	515175654	Male Terminal Housing, 2 Circuits	AR	
OVR	293550006	Female Terminal	AR	
OVR	710001931	Terminal	AR	
OVR	710002000	Housing	AR	
PDH	710001142	Terminal Housing, 2 Circuits	AR	
PDH	710001143	Female Terminal	AR	
PDH	710001427	Wire Seal	AR	
PDL	710001142	Terminal Housing, 2 Circuits	AR	
PDL	710001143	Female Terminal	AR	
PDL	710001427	Wire Seal	AR	
PF1	710000742	Little Fuse, 5 Amperes	AR	
PF1	710000742	Little Fuse, 5 Amperes	AR	
PF1	710000742	Little Fuse, 5 Amperes	AR	

PF1	710000742	Little Fuse, 5 Amperes	AR	
PF1	710000742	Little Fuse, 5 Amperes	AR	
PF1	710000745	Little Fuse, 15 Amperes	AR	
PF1	710000747	Little Fuse, 30 Amperes	AR	
PF1	515176774	Relay, 30 AMP	AR	
PF1	710001778	Relay	AR	
PF1	710001778	Relay	AR	
PF1	710002177	Housing	AR	
PF1	278000999	Wire Seal	AR	
PF1	415128501	Seal	AR	
PF1	710000742	Little Fuse, 5 Amperes	AR	
PF1	710000743	Little Fuse, 7.5 Amperes	AR	
PF1	710000744	Little Fuse, 10 Amperes	AR	
PF1	710000745	Little Fuse, 15 Amperes	AR	
PF1	710000747	Little Fuse, 30 Amperes	AR	
PF1	710000660	Fuse Box Ass'y	AR	
PF1	710000781	Fuse Puller	AR	
PF1	710000836	Female Terminal	AR	
PF1	710000837	Female Terminal	AR	
PF1	710000840	Cap	AR	
PF1	710001026	Fuse Cover	AR	
PF1	278002172	Foam	AR	
PF1	515176774	Relay, 30 AMP	AR	
PF1	710001778	Relay	AR	
PF2	710001047	Fuse, 40 AMP	AR	
PF2	710001633	Lock	AR	
PF2	278001392	Open Barrel	AR	
PF2	710001200	FUSE 30 AMP.	AR	
PF2	710001632		AR	
PF2	710001636	Terminal	AR	
PF2	233261494	Hex. Elastic Flanged Nut M6	AR	
PF2	710001905	Terminal Joint	AR	
PF2	710001996	Housing	AR	
PGH	710001142	Terminal Housing, 2 Circuits	AR	
PGH	710001143	Female Terminal	AR	
PGH	710001427	Wire Seal	AR	
PGL	710001142	Terminal Housing, 2 Circuits	AR	
PGL	710001143	Female Terminal	AR	
PGL	710001427	Wire Seal	AR	
PPS	710001119	Female Terminal	AR	
PPS	278002299	Female Terminal Housing, 6 Circuits	AR	
RD1	710001934	Terminal	AR	
RD1	710000879	Housing, 3 Circuits	AR	
RD1	710000882	Cap	AR	
RD1	710001932	Seal	AR	
RD2	710000880	Housing, 3 Circuits	AR	
RD2	710001934	Terminal	AR	
RD2	710001932	Seal	AR	
SB	710001134	Female Terminal	AR	
SB	278001482	Seal	AR	
SB	710002177	Housing	AR	
SB	710002043	Lock	AR	
SPSW	293550006	Female Terminal	AR	
SPSW	710001931	Terminal	AR	
SPSW	710002000	Housing	AR	
SS1	409010300	Female Terminal	AR	
SS2	409010300	Female Terminal	AR	
STSW	409012100	Female Terminal	AR	

STSW	XXX	Female Housing, 2 Circuits	AR	
STSW	409012300	Seal	AR	
SW1	409010300	Female Terminal	AR	
SW1	293550006	Female Terminal	AR	
SW2	409010300	Female Terminal	AR	
SW2	293550006	Female Terminal	AR	
SW3	710000038	Female Terminal	AR	
SW3	293550006	Female Terminal	AR	
SW4	710000482	Shrink Tubing	AR	
SW4	278000992	Open Barrel	AR	
SWW	293550006	Female Terminal	AR	
SWW	710001931	Terminal	AR	
SWW	710002003	Housing Connector	AR	
SWWRC	278000223	Female Terminal	AR	
SWWRC	278000585	Wire Seal (20 Gauge) (Purple)(Packard)	AR	
SWWRC	278000273	Male Housing, 3 Circuits	AR	

COMMANDER 2013 LTD 1000 / Electrical Harness Compressor, LTD

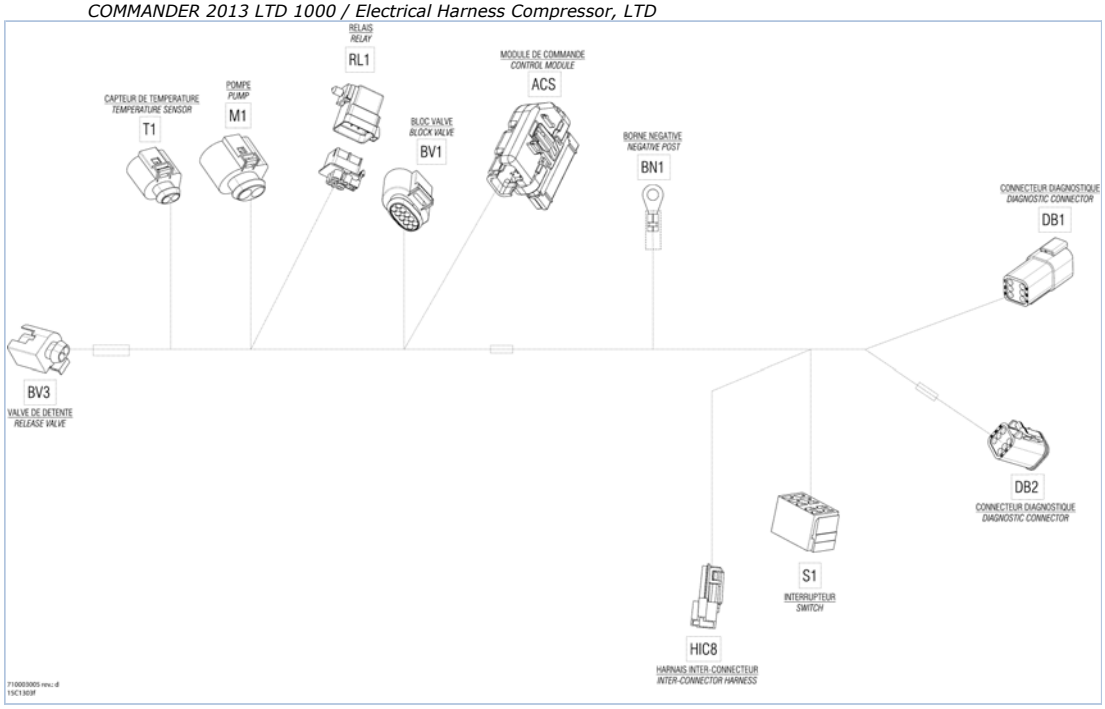

Part List

COMMANDER 2013 LTD 1000 / Electrical Harness Compressor, LTD

ITEM	PART NUMBER	PART NAME	QUANTITY	REMARKS
1	710003005	Compressor Harness	1	LTD
ACS	515175812	Plug	AR	LTD
ACS	515176221	Female Housing	AR	LTD
ACS	515176222	Wire Seal	AR	LTD
ACS	515176223	Female Terminal Housing, 36 Circuits	AR	LTD
ACS	515176224	Terminal Support	AR	LTD
ACS	710001131	Female Terminal	AR	LTD
BN1	278001392	Open Barrel	AR	LTD
BV1	710001185	Female Terminal	AR	LTD
BV1	710001258	Plug	AR	LTD
BV1	XXX	Housing	AR	LTD
BV1	XXX	Seal	AR	LTD
BV3	278001482	Seal	AR	LTD
BV3	XXX	Housing	AR	LTD
BV3	XXX	Terminal	AR	LTD
DB1	278000735	Female Lock, 6 Circuits	AR	LTD
DB1	710001348	Male Terminal	AR	LTD
DB1	710001539	Male Terminal Housing, 6 Circuits	AR	LTD
DB2	515175678	Male Wedge, 6 Circuits	AR	LTD
DB2	278001665	Female Terminal	AR	LTD
DB2	710001540	Male Housing, 6 Circuits	AR	LTD
HIC8	XXX	Female Terminal	AR	LTD
M1	XXX	Housing	AR	LTD
M1	XXX	Seal	AR	LTD
M1	XXX	Terminal	AR	LTD
RL1	278000216	Wire Seal	AR	LTD
RL1	278001505	Wire Seal	AR	LTD
RL1	278001065	Wire Seal	AR	LTD
RL1	710002996	Relay	AR	LTD
S1	710001931	Terminal	AR	LTD
S1	710002000	Housing	AR	LTD
S1	293550006	Female Terminal	AR	LTD
T1	415128501	Seal	AR	LTD
T1	710002670	Housing	AR	LTD
T1	710000836	Female Terminal	AR	LTD

COMMANDER 2013 LTD 1000 / Electrical Harness Radio, LTD

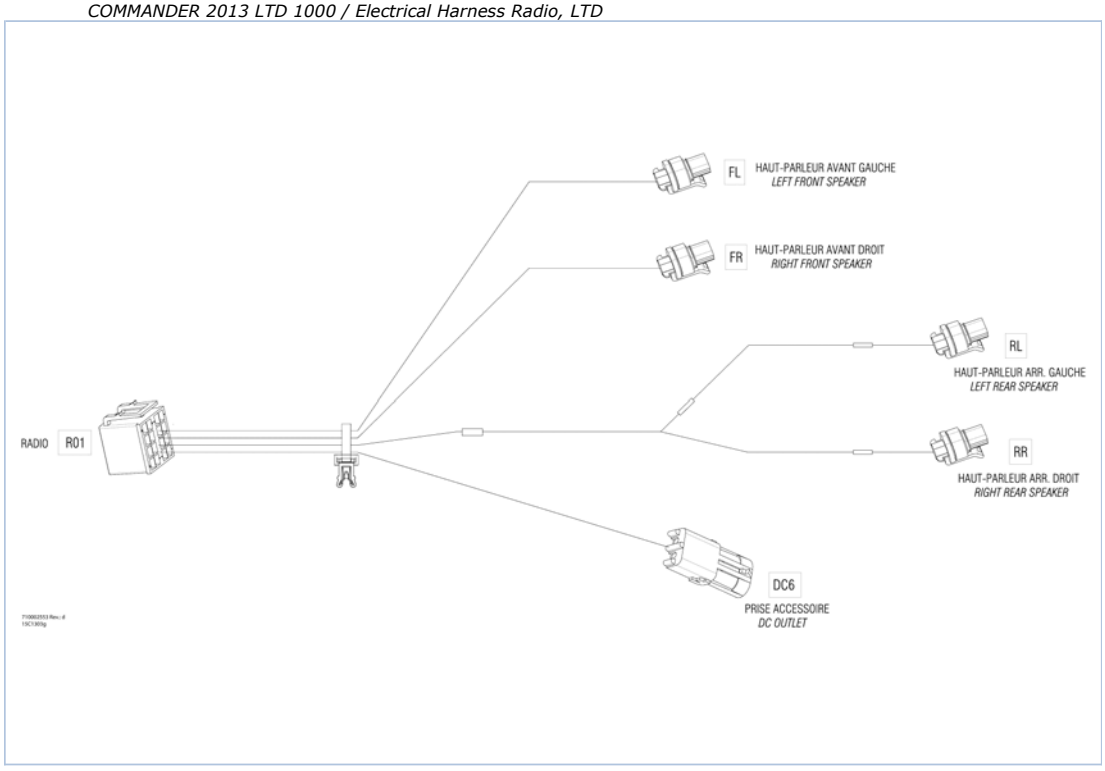

Part List

COMMANDER 2013 LTD 1000 / Electrical Harness Radio, LTD

ITEM	PART NUMBER	PART NAME	QUANTITY	REMARKS
1	710002553	RADIO HARNESS	1	LTD
DC6	278000217	Female Housing, 2 Circuits	AR	LTD
DC6	278000218	Wire Seal	AR	LTD
DC6	278000222	Male Terminal	AR	LTD
FL	XXX	Female Housing	AR	LTD
FL	XXX	Terminal	AR	LTD
FL	710001153	Seal Wire	AR	LTD
FR	XXX	Female Housing	AR	LTD
FR	XXX	Terminal	AR	LTD
FR	710001153	Seal Wire	AR	LTD
R01	293550006	Female Terminal	AR	LTD
R01	XXX	Terminal	AR	LTD
R01	XXX	Housing	AR	LTD
RL	XXX	Female Housing	AR	LTD
RL	XXX	Terminal	AR	LTD
RL	710001153	Seal Wire	AR	LTD
RR	XXX	Female Housing	AR	LTD
RR	XXX	Terminal	AR	LTD
RR	710001153	Seal Wire	AR	LTD

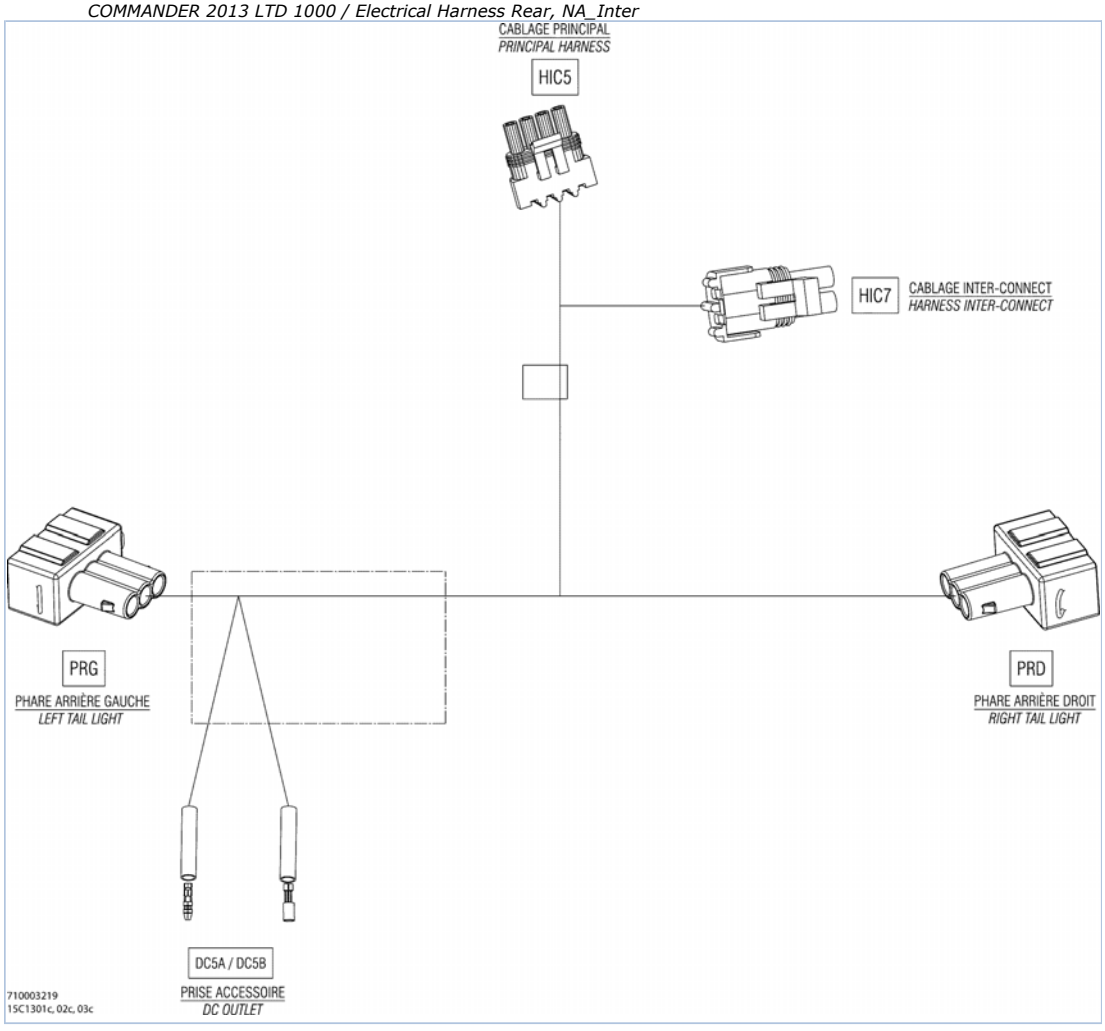
CABLAGE PRINCIPAL
PRINCIPAL HARNESS
HIC5
HIC7
CABLAGE INTER-CONNECT
HARNESS INTER-CONNECT
PRG
PHARE ARRIÈRE GAUCHE
LEFT TAIL LIGHT
PRD
PHARE ARRIÈRE DROIT
RIGHT TAIL LIGHT
DC5A / DC5B
PRISE ACCESSOIRE
DC OUTLET
710003219
15C1301c, 02c, 03c

Part List

COMMANDER 2013 LTD 1000 / Electrical Harness Rear, NA_Inter

ITEM	PART NUMBER	PART NAME	QUANTITY	REMARKS
1	710003219	REAR HARNESS	1	North America, Inter
504	278001065	Wire Seal	AR	North America, Inter
DC5A	278001008	Insulated Sheath	AR	North America, Inter
DC5A	278002261	Female Terminal	AR	North America, Inter
DC5B	278001007	Insulated Sheath	AR	North America, Inter
DC5B	710000421	Female Terminal	AR	North America, Inter
DC5B	293550006	Female Terminal	AR	North America, Inter
HIC5	278000223	Female Terminal	AR	North America, Inter
HIC5	278000395	Male Housing, 4 Circuits	AR	North America, Inter
HIC5	278000585	Wire Seal (20 Gauge) (Purple)(Packard)	AR	North America, Inter
HIC7	409007300	Female Terminal	AR	North America, Inter
HIC7	278000220	Male Connector, 2 Circuits	AR	North America, Inter
HIC7	278000218	Wire Seal	AR	North America, Inter
PRD	278000998	Female Terminal	AR	North America, Inter
PRD	415128501	Seal	AR	North America, Inter
PRD	XXX	Housing	AR	North America, Inter
PRG	278000998	Female Terminal	AR	North America, Inter
PRG	XXX	Housing	AR	North America, Inter

COMMANDER 2013 LTD 1000 / Electrical Harness Speaker

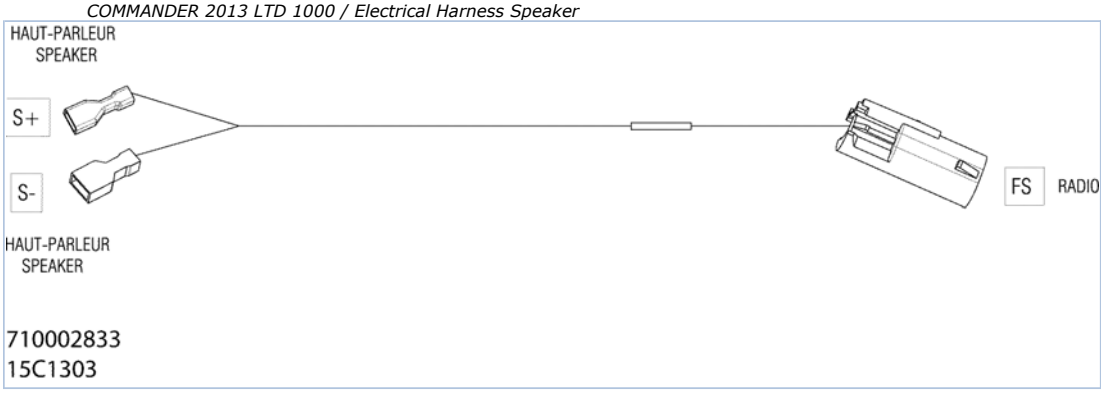

710002833
15C1303

Part List

COMMANDER 2013 LTD 1000 / Electrical Harness Speaker

ITEM	PART NUMBER	PART NAME	QUANTITY	REMARKS
1	710002833	Speaker Harness	2	LTD
FS	710001038	Clip	AR	
FS	710001151	Housing PT	AR	
FS	710001152	Lock	AR	
FS	710001153	Seal Wire	AR	
FS	710001154	Male Terminal	AR	
S	293550006	Female Terminal	AR	
S	710000114	Female Terminal	AR	
S+	293550006	Female Terminal	AR	
S+	710001235	Terminal	AR	

COMMANDER 2013 LTD 1000 / Electrical System

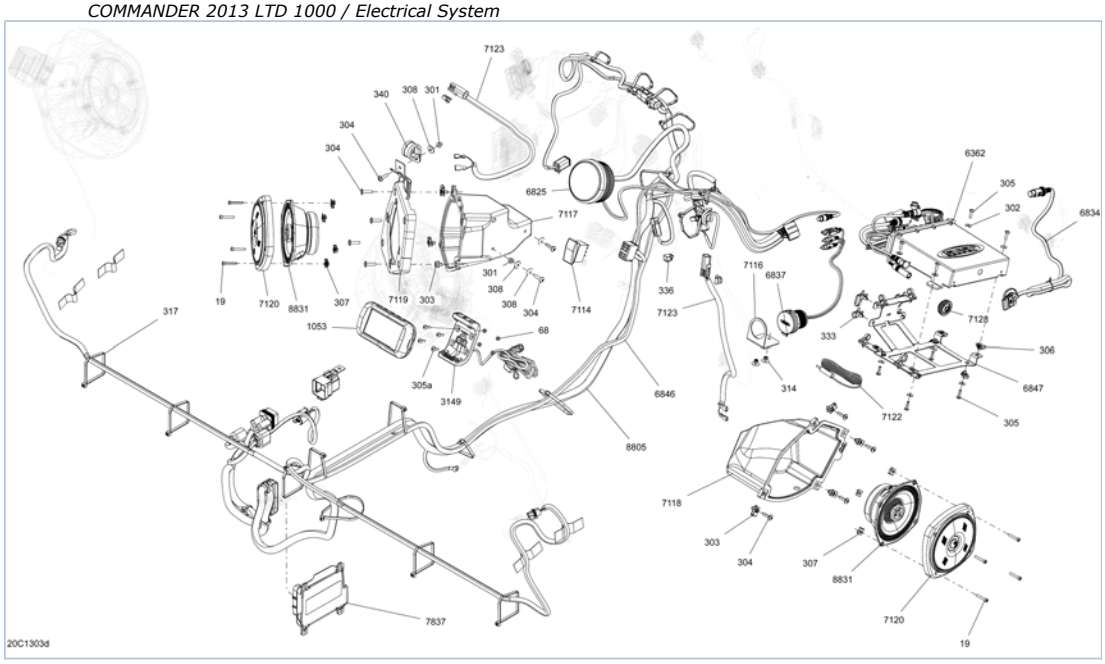

Part List

COMMANDER 2013 LTD 1000 / Electrical System

ITEM	PART NUMBER	PART NAME	QUANTITY	REMARKS
19	205042560	Socket Head Screw M4 X 25	8	LTD
68	232541484	Elastic Stop Nut M4	4	LTD
301	233251494	ELASTIC FLANGED NUT M5	3	LTD
302	234042600	Flat Washer 4 mm, Stainless	8	LTD
303	250000079	Panel Nut M5 X 0.8	8	LTD
304	250000130	Torx Screw M5 X 20	11	LTD
305a	250000575	Torx-Truss M4 X 16	4	LTD
305	250000242	Truss Torx Screw M4 X 16	8	LTD
306	250100143	Extruded Panel Nut M4 X 0.7	8	LTD
307	250100149	Extruded Panel Nut M4 X 0.7	8	LTD
308	250200025	Washer M5	5	LTD
314	293150103	Pop Rivet 3/16"	2	LTD
317	293750008	Tie-Rap 350 mm	AR	LTD
333	293750009	Tie-Rap 173 mm	AR	LTD
336	414227300	Clip	1	LTD
340	709200036	HOSE ANCHOR	1	LTD
1053	710002544	GPS	1	LTD International
1053	710002544	GPS	1	LTD North America
1053	N/A	Not available for this vehicle	-	
3149	710002545	GPS Support	1	LTD
6362	710002548	AMPLIFIER	1	LTD
6825	710002549	Radio Interface	1	LTD
6834	710002550	IPOD Extension	1	LTD
6837	710002551	USB Extension	1	LTD
6846	710002553	RADIO HARNESS	1	LTD
6847	710002556	Amplifier Support	1	LTD
7114	710002684	Switched Accessory	1	LTD
7116	710002731	USB Extension Support	1	LTD
7117	710002786	LH Front Speaker Box	1	LTD
7118	710002787	RH Front Speaker Box	1	LTD
7119	710002789	Speaker Box Plate	1	LTD
7120	710002790	Speaker Cover	2	LTD
7122	710002810	ANTENNA	1	LTD
7123	710002833	Speaker Harness	2	LTD
7128	710002926	Grommet Boot	1	LTD
7837	710002947	Calibrated Compressor Module	1	LTD
8805	710003005	Compressor Harness	1	LTD
8831	710003233	Front Speaker	2	LTD

COMMANDER 2013 LTD 1000 / Electrical System All Models

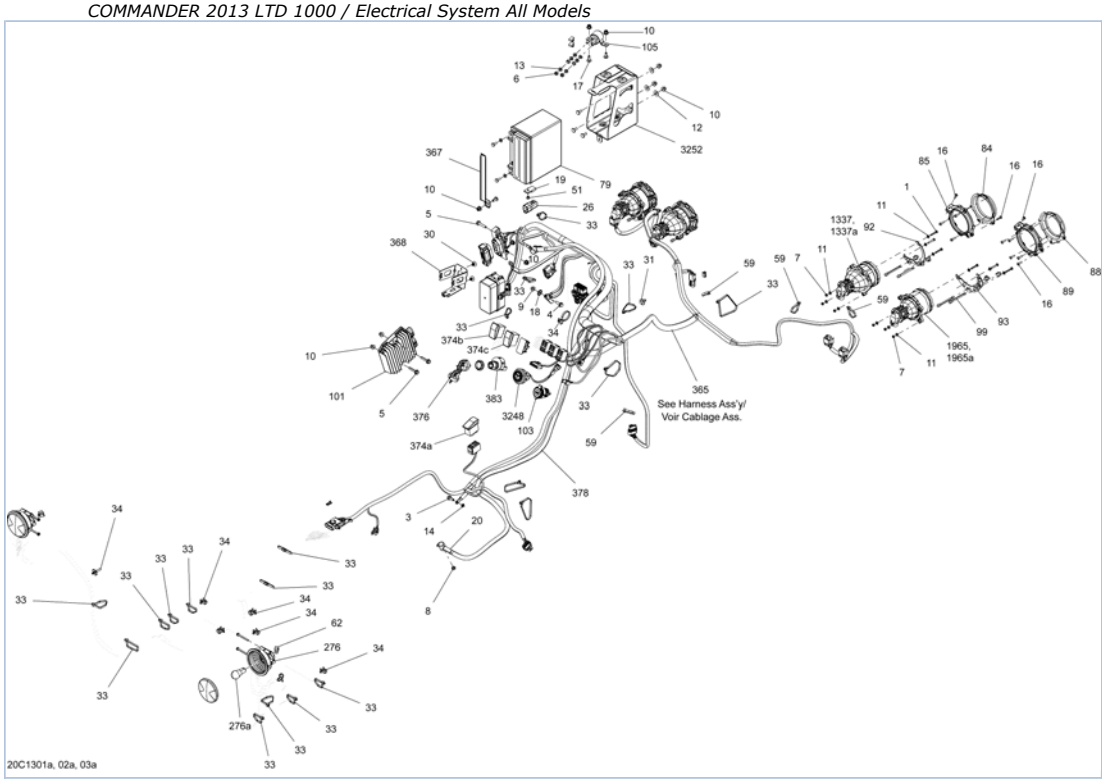

Part List

COMMANDER 2013 LTD 1000 / Electrical System All Models

ITEM	PART NUMBER	PART NAME	QUANTITY	REMARKS
1	207142544	HEX. SCREW M4 X 25	12	
3	207561644	Hex. Flanged Screw M6 X 16, Scotch Grip	1	
4	207662044	Hex. Flanged Screw M6 X 20	1	
5	207663044	Hex. Flanged Screw M6 X 30	1	
5	207663044	Hex. Flanged Screw M6 X 30	2	
6	232061600	Hex. Nut M6	2	
7	232541414	Elastic Stop Nut M4	12	
8	232561414	Elastic Stop Nut M6	1	
9	233061414	Hex. Flanged Nut M6	1	
10	233261414	Hex. Flanged Elastic Nut M6	10	
11	234051410	Flat Washer M5	24	
12	234062410	Flat Washer 6 mm	3	
13	234161601	Lock Washer Helical M6	2	
14	234461608	External Serrated Lock Washer 6 mm	1	
15	241154540	Hex. Screw K50 X 45	4	
16	250000084	Phillips Screw K40 X 16	22	
17	250000223	Torx Screw M6 X 16	1	
18	250200041	Lock Washer Serrated M6	1	
19	270000141	Clip	1	
26	278002704	Diagnostic Connector	2	
30	293150103	Pop Rivet 3/16"	2	
31	293730040	Mount Dart	1	
33	293750008	Tie-Rap 350 mm	AR	
34	293750009	Tie-Rap 173 mm	AR	
51	390402400	Pop Rivet 3/16"	1	
59	414115200	Tie-Rap 180 mm	AR	
62	414227300	Clip	2	
79	410301203	Battery Ass'y, 18 Amperes	1	
84	710001083	LH Low Front Housing	1	
84	710001081	RH Low Front Housing	1	
85	710001084	LH Low Rear Housing	1	
85	710001082	RH Low Rear Housing	1	
88	710001087	LH High Front Housing	1	
88	710001085	RH High Front Housing	1	
89	710001088	LH High Rear Housing	1	
89	710001086	RH High Rear Housing	1	
92	710001037	LH Low Light Support	1	
92	710001094	RH Low Light Support	1	
93	710001036	LH High Light Support	1	
93	710001115	RH High Light Support	1	
99	710001147	Setting Screw	8	
101	710001191	Voltage Regulator	1	
103	710001248	Outlet DC	1	
105	710001364	Starter Relay	1	
276	710001645	TAIL LIGHT	2	
276a	520000758	Bulb	1	
365	710002485	Harness Ass'y	1	
367	710001916	Battery Holder	1	
368	710001918	Fuse Holder	1	
374a	710002053	Switch	1	
374b	710001737	Switch	1	
374c	710002199	PPS Sport Switch	1	
376	710000817	Key, Electronic	1	
376	710002183	Key, Electronic	1	

378	710002146	POSITIVE CABLE	1	
383	710002327	Ignition Switch	1	
1337	710002524	Low Beam Ass'y	2	
1337a	415129249	Halogen Bulb	1	
1965	710002525	High Beam Ass'y	2	
1965a	415129249	Halogen Bulb	1	
3248	710002594	Engine START Button	1	
3252	710003129	Battery Support	1	

COMMANDER 2013 LTD 1000 / Electrical System LTD

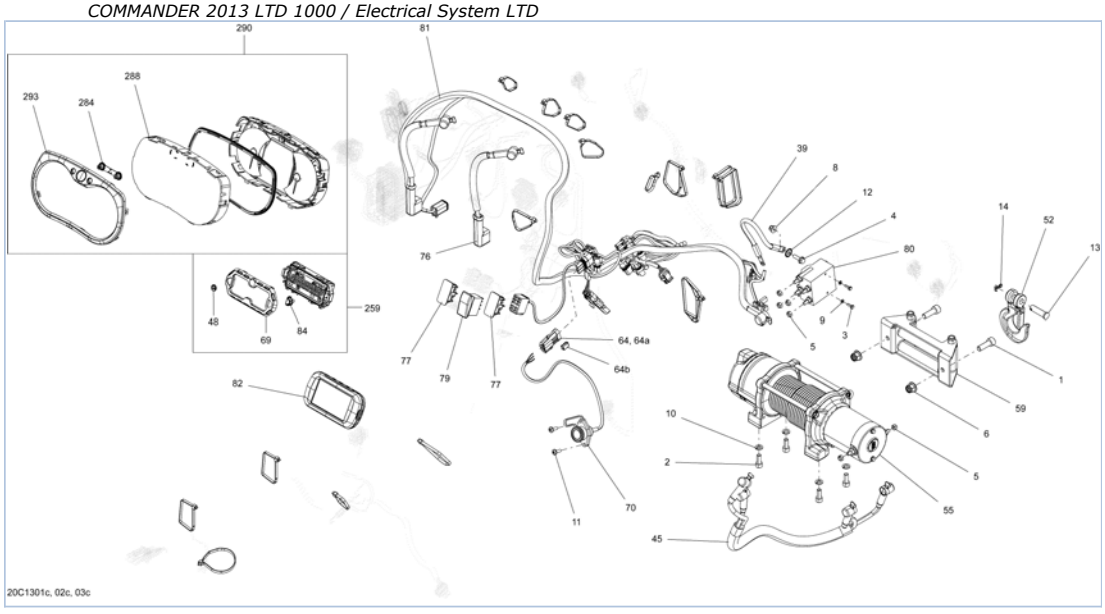

Part List

COMMANDER 2013 LTD 1000 / Electrical System LTD

ITEM	PART NUMBER	PART NAME	QUANTITY	REMARKS
1	205003044	SOCKET SCREW M10 X 30	2	LTD
2	205082044	Socket Head Screw M8 X 20	4	LTD
3	207141044	Hex. Screw M4 X 10	2	LTD
4	207662044	Hex. Flanged Screw M6 X 20	1	LTD
5	232561434	Elastic Stop Nut M6	6	LTD
6	233201414	Hex. Flanged Elastic Nut M10	2	LTD
8	233261414	Hex. Flanged Elastic Nut M6	1	LTD
9	234141601	Lock Washer 4 mm	2	LTD
10	234181401	Lock Washer 8 mm	4	LTD
11	250000146	Truss Head Torx Screw K50 X 16	2	LTD
12	250200041	Lock Washer Serrated M6	1	LTD
13	250400021	clevis pin	1	LTD
14	250400022	Cotter Pin	1	LTD
39	710002214	Negative Cable	1	LTD
45	710002216	Electrical Winch Cable	1	LTD
48	N/A	Not available for this vehicle	-	
52	705002329	HOOK	1	LTD
55	705003944	Winch	1	LTD
59	705004228	Winch Cable Guide	1	LTD
64	710001059	CONNECTOR ASS'Y	1	LTD
64a	278000281	Female Terminal Housing, 3 Circuits	1	LTD
64b	710000992	Clip	1	LTD
69	N/A	Not available for this vehicle	-	
70	710001023	Winch Connector	1	LTD
76	N/A	Not available for this vehicle	-	
77	N/A	Not available for this vehicle	-	
79	710002052	Switch	1	LTD
80	710002112	Solenoid	1	LTD
81	710002159	POSITIVE CABLE	1	LTD
82	710002544	GPS	1	LTD International
82	710002544	GPS	1	LTD North America
82	N/A	Not available for this vehicle	-	
84	N/A	Not available for this vehicle	-	
259	N/A	Not available for this vehicle	-	
284	415129355	Speedometer Button	1	LTD
288	415129349	Lens	1	LTD
290	710003290	Calibrated Speedometer	1	LTD
293	415129348	Gauge Ring	1	LTD

COMMANDER 2013 LTD 1000 / Electrical System NA, INTER

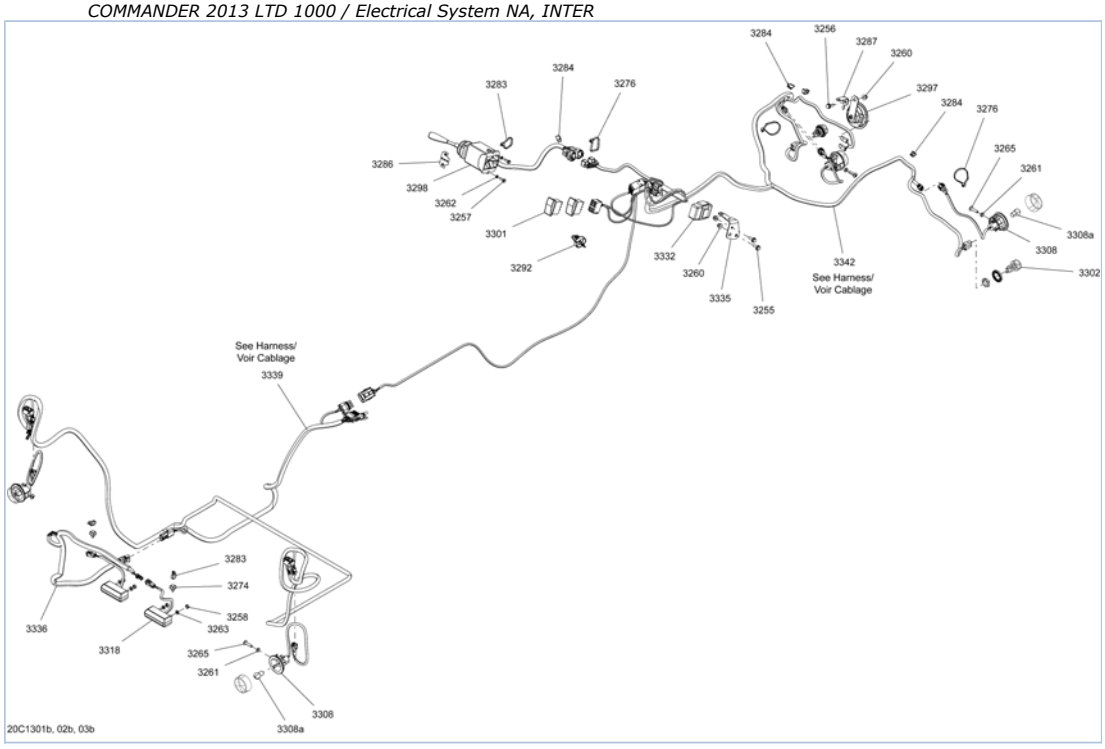

Part List

COMMANDER 2013 LTD 1000 / Electrical System NA, INTER

ITEM	PART NUMBER	PART NAME	QUANTITY	REMARKS
3255	N/A	Not available for this vehicle	-	
3256	N/A	Not available for this vehicle	-	
3257	N/A	Not available for this vehicle	-	
3258	N/A	Not available for this vehicle	-	
3260	N/A	Not available for this vehicle	-	
3261	N/A	Not available for this vehicle	-	
3262	N/A	Not available for this vehicle	-	
3263	N/A	Not available for this vehicle	-	
3265	N/A	Not available for this vehicle	-	
3274	N/A	Not available for this vehicle	-	
3276	N/A	Not available for this vehicle	-	
3283	N/A	Not available for this vehicle	-	
3284	N/A	Not available for this vehicle	-	
3286	N/A	Not available for this vehicle	-	
3287	N/A	Not available for this vehicle	-	
3292	N/A	Not available for this vehicle	-	
3297	N/A	Not available for this vehicle	-	
3298	N/A	Not available for this vehicle	-	
3301	710001725	Hi/Low Switch	1	North America, International
3301	N/A	Not available for this vehicle	-	
3302	N/A	Not available for this vehicle	-	
3308	N/A	Not available for this vehicle	-	
3308a	N/A	Not available for this vehicle	-	
3318	N/A	Not available for this vehicle	-	
3332	N/A	Not available for this vehicle	-	
3335	N/A	Not available for this vehicle	-	
3336	N/A	Not available for this vehicle	-	
3339	710003219	REAR HARNESS	1	North America, International
3339	N/A	Not available for this vehicle	-	
3342	N/A	Not available for this vehicle	-	

1000

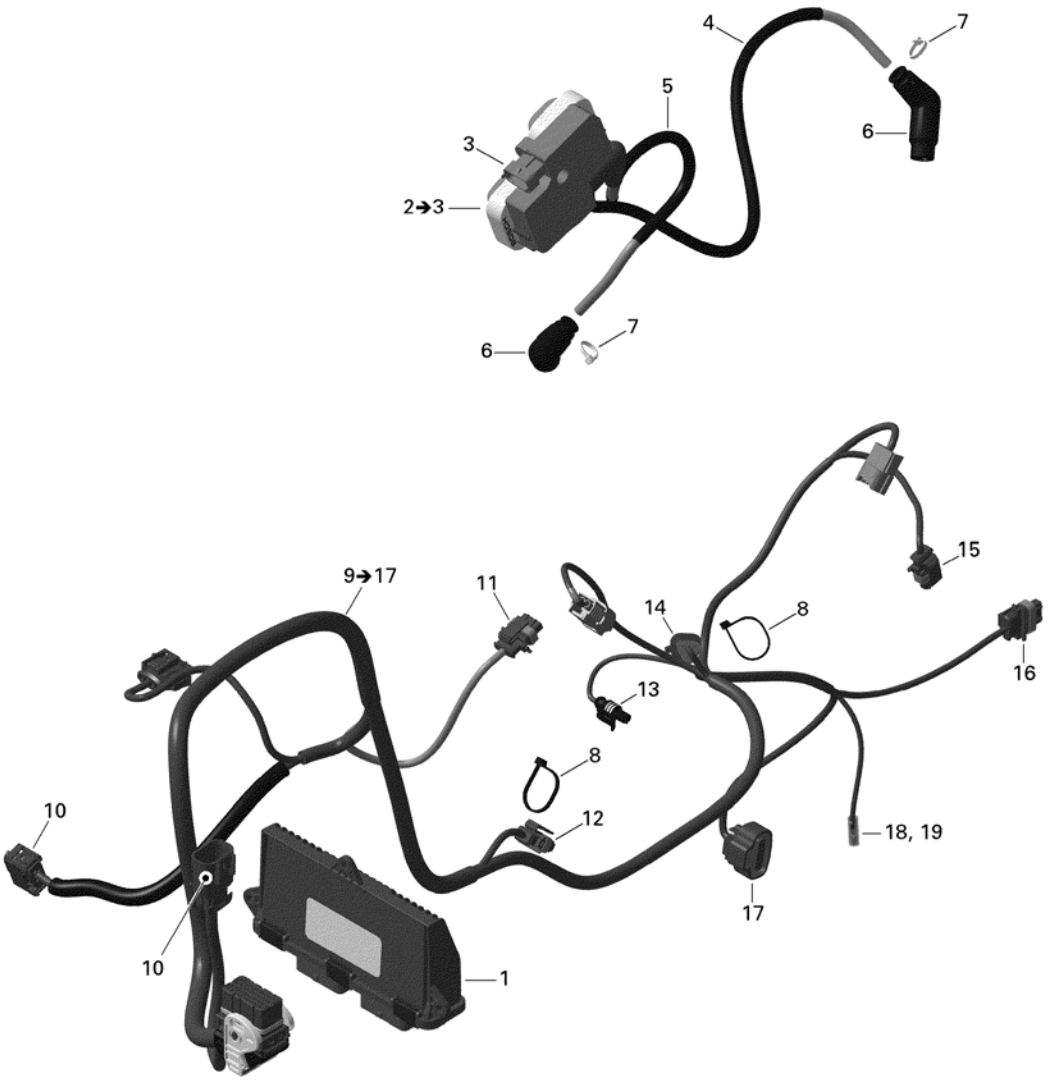

Part List

COMMANDER 2013 LTD 1000 / Engine Harness And Electronic Module

ITEM	PART NUMBER	PART NAME	QUANTITY	REMARKS
1	420266956	ECM Connector	1	Except Europe
1	420266957	ECM Connector	1	Europe
2	278001546	Ignition Coil	1	
3	710000568	Housing	1	
4	420665330	Spark Plug Cable, 610 mm, PTO Side	1	
5	420664300	Spark Plug Cable, 365 mm, MAG Side	1	
6	420265248	Spark Plug Connector	2	
7	420866710	Tie Rap	2	
8	420866714	Tie Rap	1	
9	420666332	Engine Wiring Harness	1	Includes 9 to 17
10	710001872	Housing, 6 Positions	1	
11	278000997	Male Housing, 3 Circuits	1	
12	278001005	Male Housing, 2 Circuits	1	
13	278001012	Male Housing, 1 Circuit	1	
14	409207000	Male Housing, 3 Circuits	1	
15	278001005	Male Housing, 2 Circuits	1	
16	278000997	Male Housing, 3 Circuits	1	
17	710000329	Male Housing, 4 Circuits	1	
18	278001009	Female Terminal	1	
19	278001007	Insulated Sheath	1	

The illustrations figuring in this parts catalog show typical construction of the different assemblies and, in all cases, may not reproduce the full detail or exact shape of the parts shown. However, they represent parts which have the same or similar function.

Les illustrations contenues dans ce catalogue indiquent la disposition des pièces les unes par rapport aux autres. Il est donc possible qu'elles ne rendent pas compte de la forme exacte de ces pièces ainsi que de leurs détails de fabrication. Ces illustrations ont pour but d'identifier des pièces qui remplissent la même fonction ou une fonction identique.

SYMBOLS USED IN THIS CATALOG

@	In «Quantity» column means «Use as Required».
Opt	In «Quantity» column means «Optional».
XXX	Parts marked with «XXX» are not available as spare parts.

SYMBOLES UTILISÉS DANS CE CATALOGUE

@	Dans la colonne «Quantité» signifie «Au besoin».
Opt	Dans la colonne «Quantité» signifie «En option».
XXX	Les articles marqués d'un «XXX» ne sont pas disponibles comme pièces de remplacement.

Part List

COMMANDER 2013 STD 800R, X 1000 (SUPPLEMENT-IS) / Model Numbers (Supplement-IS Market)

ITEM	PART NUMBER	PART NAME	QUANTITY	REMARKS
1	6VDA	Commander X 1000, 4X4, Black/Yellow (Supplement-IS Market)		Use in Conjuction with 'Commander STD, DPS,XT, X, 1000R EFI 2013' 1000 EFI
2	6XDA	Commander 800R, 4X4, Red (Supplement-IS Market)		Use in Conjuction with 'Commander STD, DPS,XT, 800R EFI 2013' 800 EFI
3	7ADA	Commander X 1000, 4X4, Yellow/Black (Supplement-IS Market)		Use in Conjuction with 'Commander STD, DPS,XT, X, 1000R EFI 2013' 1000 EFI
4	7ADB	Commander 800R, 4X4, Yellow (Supplement-IS Market)		Use in Conjuction with 'Commander STD, DPS,XT, 800R EFI 2013' 800 EFI

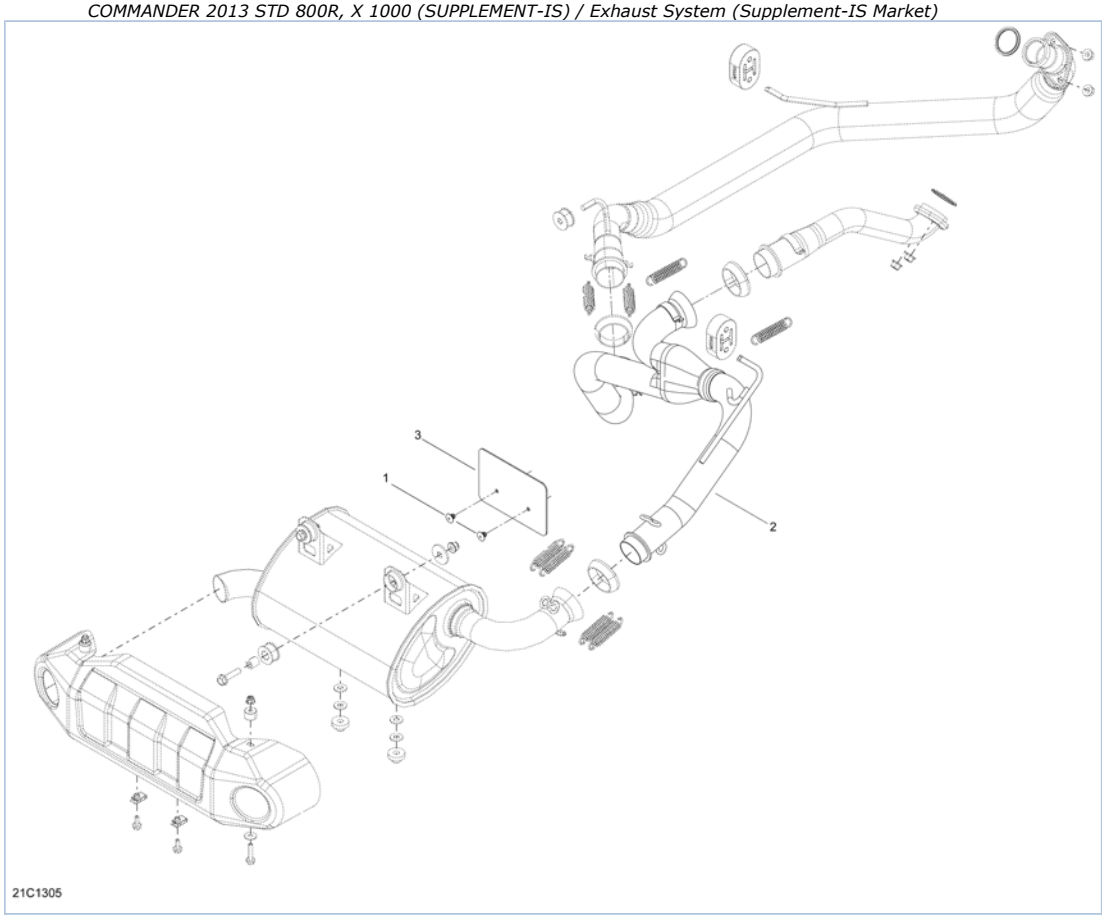
3
1
2
21C1305

Part List

COMMANDER 2013 STD 800R, X 1000 (SUPPLEMENT-IS) / Exhaust System (Supplement-IS Market)

ITEM	PART NUMBER	PART NAME	QUANTITY	REMARKS
1	293150104	Pop Rivet 3/16"	2	
2	707601152	Link Head Pipe	1	
3	707601209	Heat Shield	1	

COMMANDER 2013 STD 800R, X 1000 (SUPPLEMENT-IS) / Brakes (Supplement-IS Market)

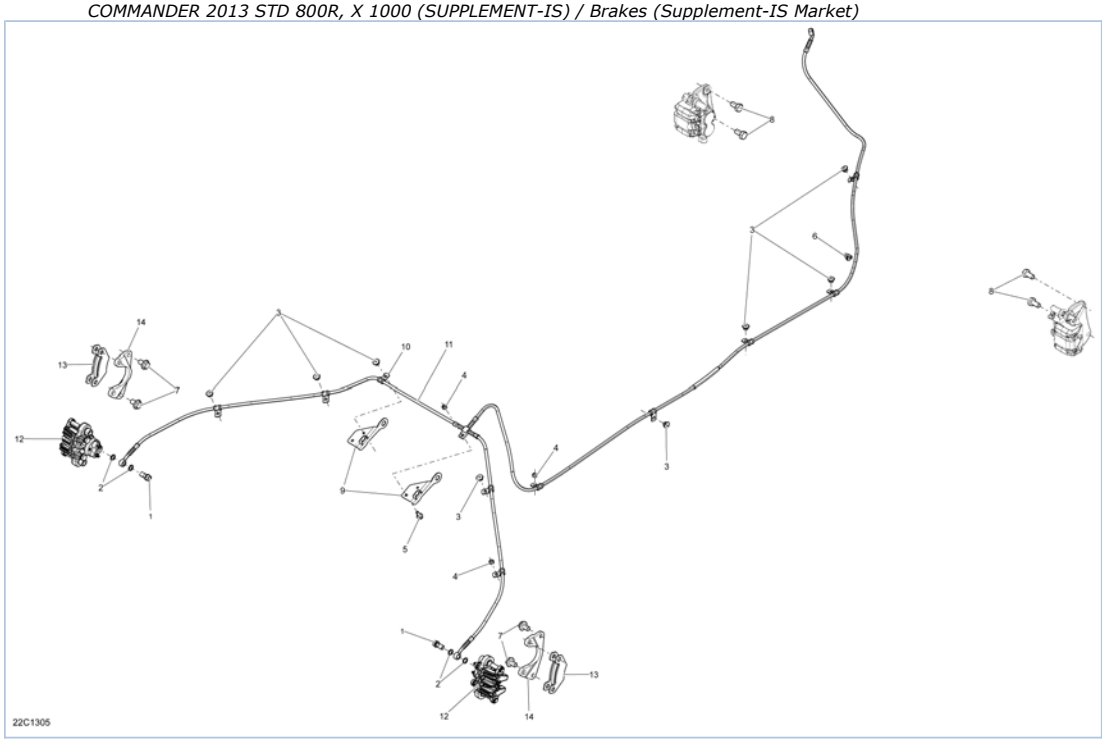

Part List

COMMANDER 2013 STD 800R, X 1000 (SUPPLEMENT-IS) / Brakes (Supplement-IS Market)

ITEM	PART NUMBER	PART NAME	QUANTITY	REMARKS
1	705600628	Banjo Bolt	2	
2	705600310	Copper Washer	4	
3	390406500	Pop Rivet 3/16"	8	
4	232561414	Elastic Stop Nut M6	3	
5	207661644	Hex. Flanged Screw M6 X 16	1	
6	414115200	Tie-Rap 180 mm	1	
7	250000060	Flanged Screw M10 X 16, Scotch Grip	4	
8	250000057	Hex. Screw M10 X 20, Scotch Grip	4	
9	705601111	Bracket	2	
10	705600459	Clamp	1	
11	705601055	REAR FLEXIBLE HOSE	1	
12	705601056	REAR CALIPER	2	
13	705600711	Brake Pad Kit	2	
14	705601057	Rear Caliper Support	2	

COMMANDER 2013 STD 800R, X 1000 (SUPPLEMENT-IS) / Drive System, Rear (Supplement-IS Market)

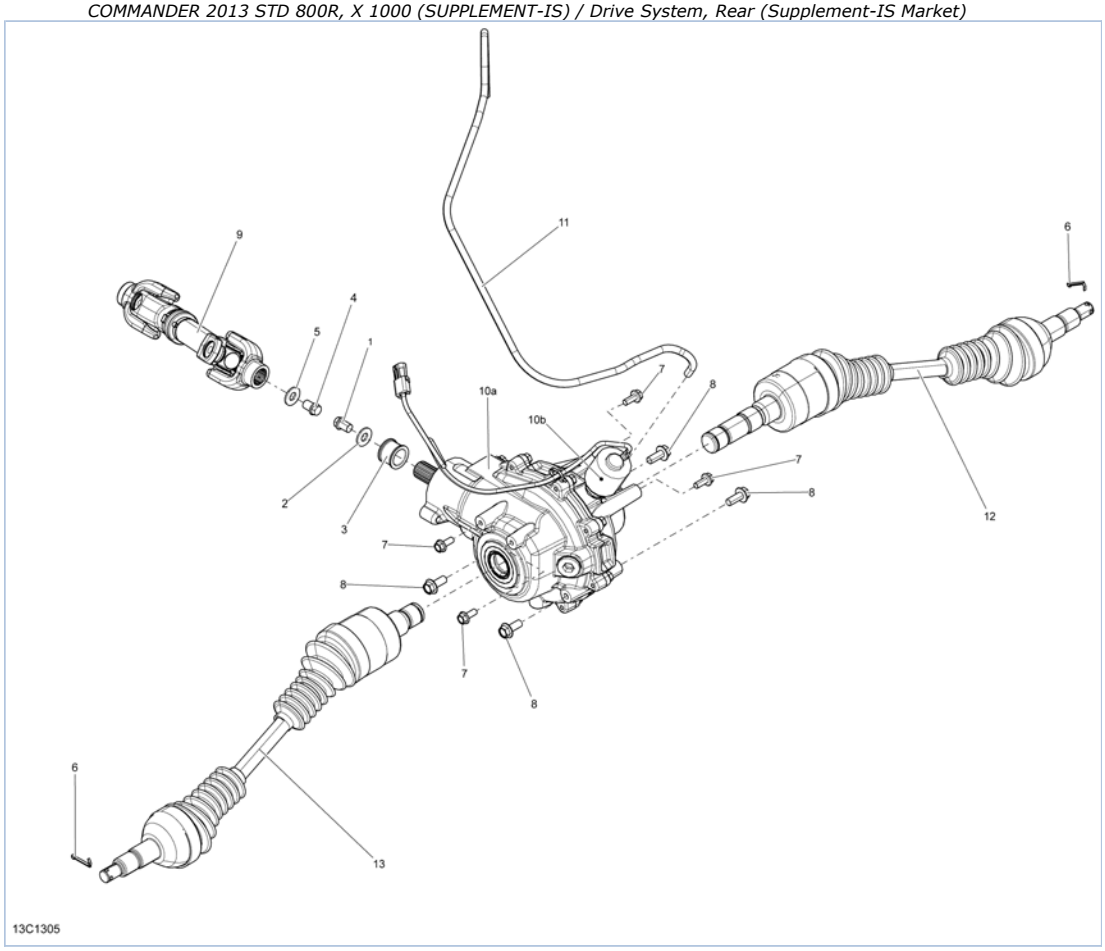

Part List

COMMANDER 2013 STD 800R, X 1000 (SUPPLEMENT-IS) / Drive System, Rear (Supplement-IS Market)

ITEM	PART NUMBER	PART NAME	QUANTITY	REMARKS
1	250000378	Hex Flanged Screw S.Grip M12 X 16	1	
2	250200102	Flat Washer	1	
3	705501629	Spacer	1	
4	250000359	Hex Flanged Screw M12 x 16	1	
5	250200102	Flat Washer	1	
6	250400036	Cotter Pin	2	
7	207582044	Hex. Flanged Screw M8 X 20, Scotch Grip	4	
8	207502587	Hex. Flanged Screw M10 X 25, Scotch Grip	4	
9	705501773	Drive Axle	1	
10a	705501579	DIFFERENTIAL	1	Includes 10a to 10b
10b	710003430	Solenoid	1	
11	415080200	Hose, Polyurethane	1	
12	705501630	RH Half Shaft	1	
13	705501631	LH Half Shaft	1	

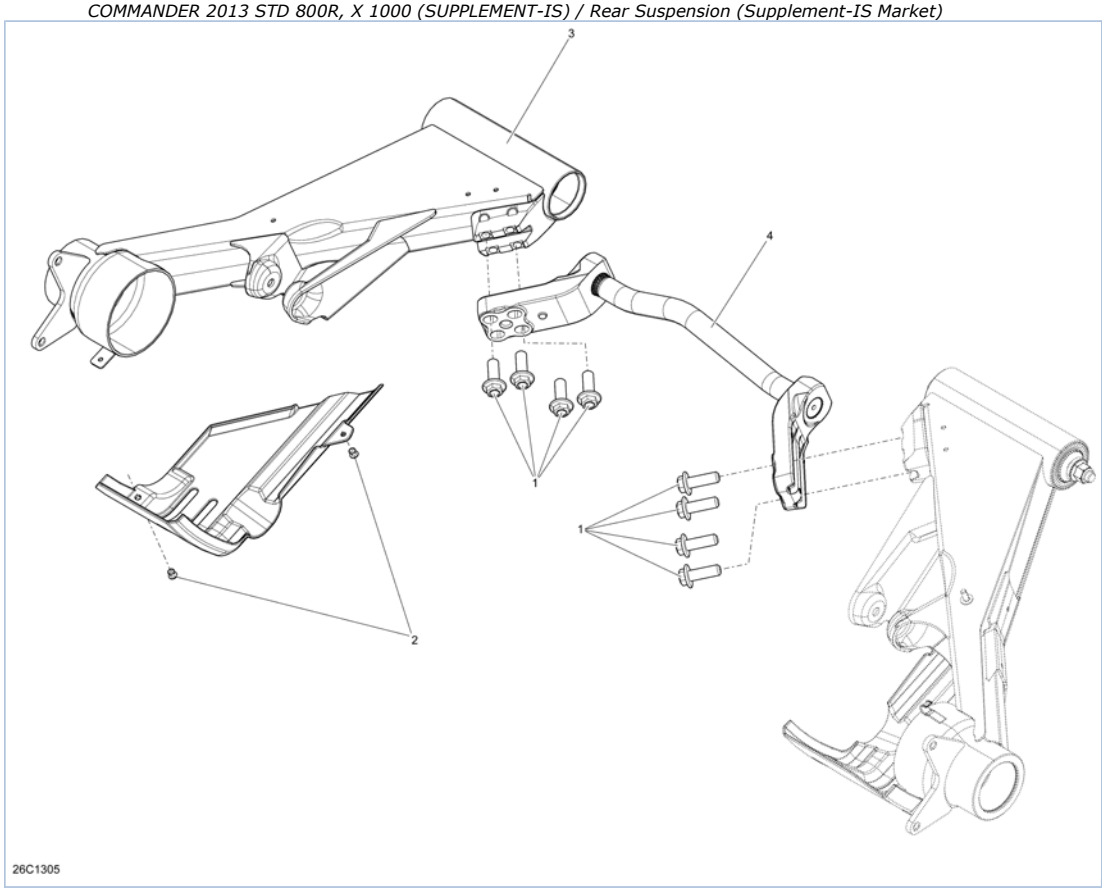
3
4
1
1
2
26C1305

Part List

COMMANDER 2013 STD 800R, X 1000 (SUPPLEMENT-IS) / Rear Suspension (Supplement-IS Market)

ITEM	PART NUMBER	PART NAME	QUANTITY	REMARKS
1	207523544	Hex. Flanged Screw M12 X 35, Scotch Grip	8	
2	293150104	Pop Rivet 3/16"	2	
3	706001416	LH Swing Arm	1	
4	706001417	Sway Bar	1	

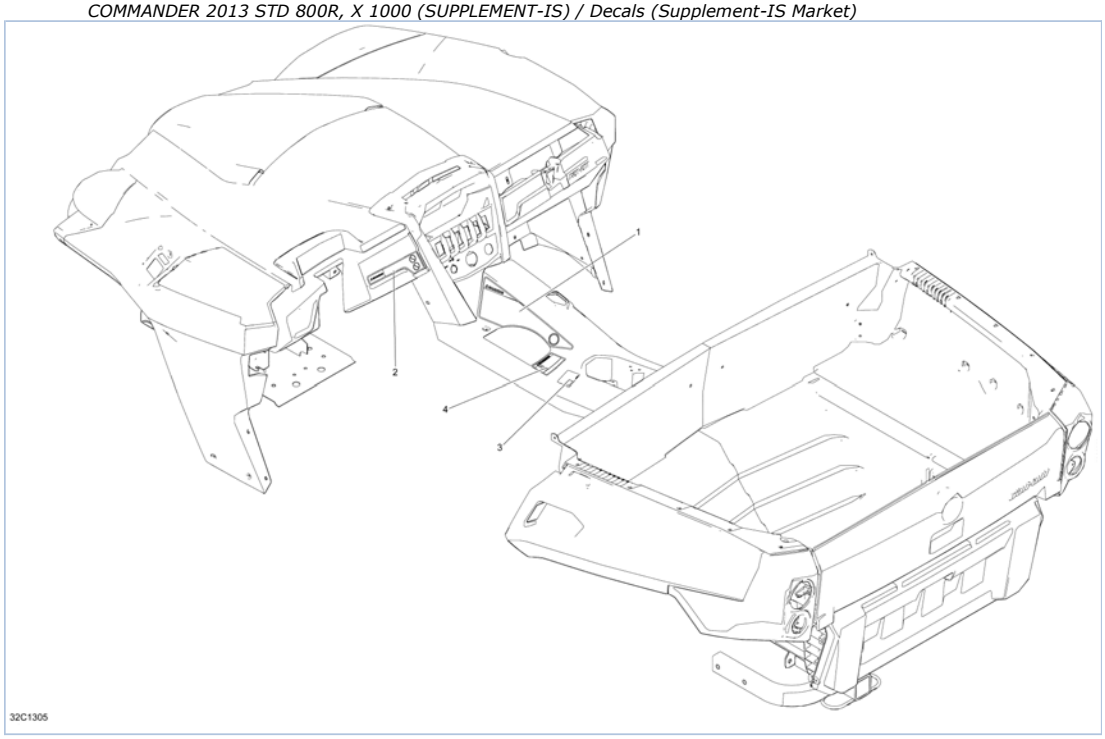
1
2
4
3
32C1305

Part List

COMMANDER 2013 STD 800R, X 1000 (SUPPLEMENT-IS) / Decals (Supplement-IS Market)

ITEM	PART NUMBER	PART NAME	QUANTITY	REMARKS
1	704903302	Warning Decal, Death And Injuries	1	
2	704903309	Warning Decal, Responsible	1	
3	704903325	Decal, Differential	1	
4	704903324	Warning Decal, Transmission	1	

COMMANDER 2013 STD 800R, X 1000 (SUPPLEMENT-IS) / Frame (Supplement-IS Market)

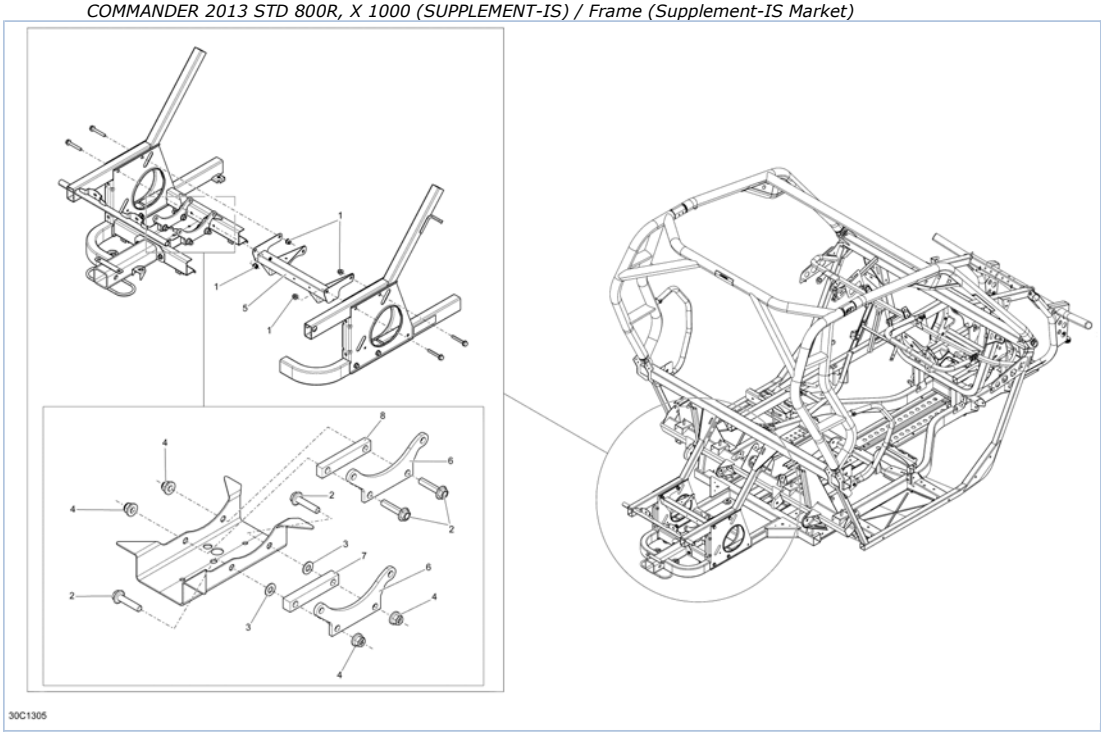

Part List

COMMANDER 2013 STD 800R, X 1000 (SUPPLEMENT-IS) / Frame (Supplement-IS Market)

ITEM	PART NUMBER	PART NAME	QUANTITY	REMARKS
1	233281414	Hex. Flanged Elastic Nut M8	4	
2	207604544	HEX. FLANGED SCREW M10 X 45	4	
3	234001410	Flat Washer 10 mm	2	
4	233201416	Hex. Flanged Elastic Nut M10	4	
5	705202876	Rear Differential Support	1	
6	705203273	Inferior Differential Support	2	
7	705203274	RH Inferior Differential Support	1	
8	705203275	LH Inferior Differential Support	1	

COMMANDER 2013 STD 800R, X 1000 (SUPPLEMENT-IS) / Mirrors And Tools (Supplement-IS Market)

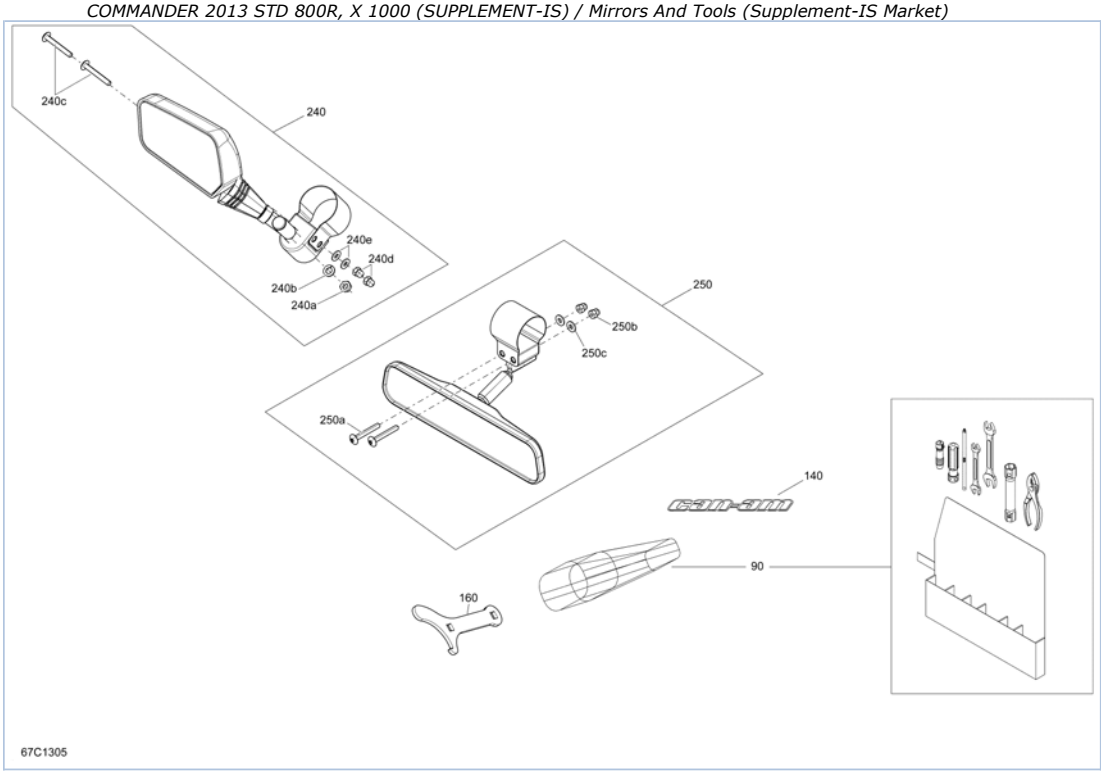

Part List

COMMANDER 2013 STD 800R, X 1000 (SUPPLEMENT-IS) / Mirrors And Tools (Supplement-IS Market)

ITEM	PART NUMBER	PART NAME	QUANTITY	REMARKS
90	704700148	Tool Kit	1	
140	704902319	Cage Decal	1	
160	529000057	Adjustment Wrench	1	
240	708200182	Left Mirror Kit	1	Includes 240 to 240e
240a	232180600	HEX. JAM NUT M8	1	
240b	234181401	Lock Washer 8 mm	1	
240c	250000215	Torx Screw M6 X 45	2	
240d	232361493	Domed Nut M6	2	
240e	250200039	Flat Washer	2	
250	708200183	Center Mirror Kit	1	Includes 250 to 250e
250a	250000215	Torx Screw M6 X 45	2	
250b	232361493	Domed Nut M6	2	
250c	250200039	Flat Washer	2	

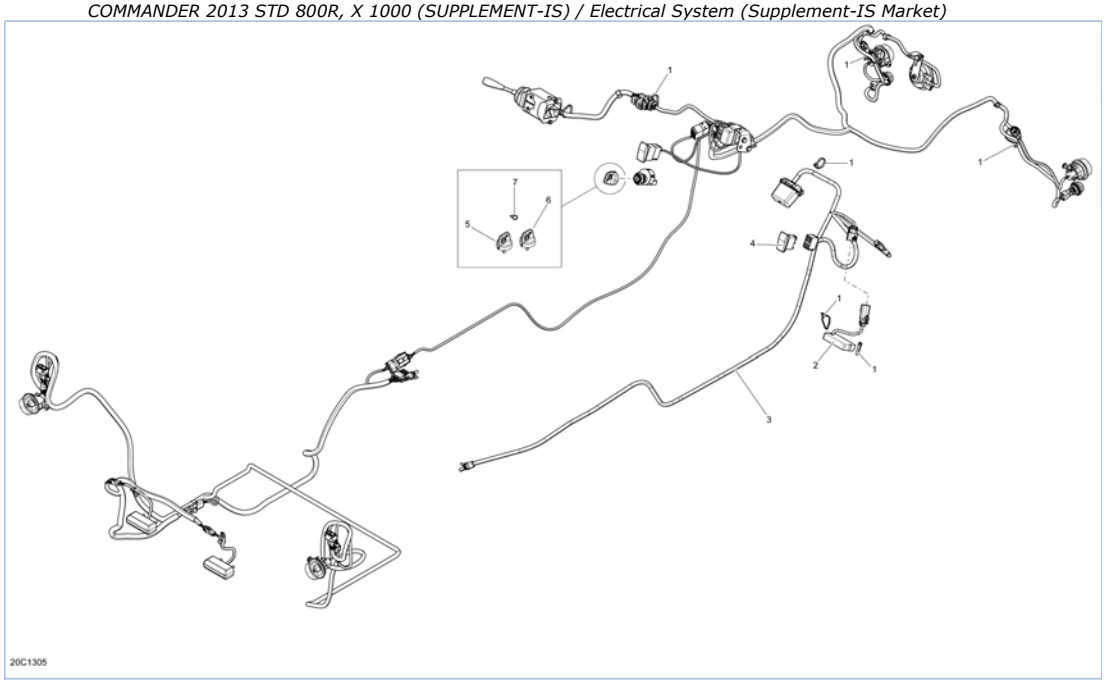
1
1
1
1
7
6
5
4
1
2
1
3
20C1305

Part List

COMMANDER 2013 STD 800R, X 1000 (SUPPLEMENT-IS) / Electrical System (Supplement-IS Market)

ITEM	PART NUMBER	PART NAME	QUANTITY	REMARKS
1	293750008	Tie-Rap 350 mm	6	
2	710003330	Module	1	
3	710003277	Differential Harness	1	
4	710003421	Differential Switch	1	
5	710000817	Key, Electronic	1	
6	710002183	Key, Electronic	1	
7	293750001	Tie-Rap 94 mm	1	

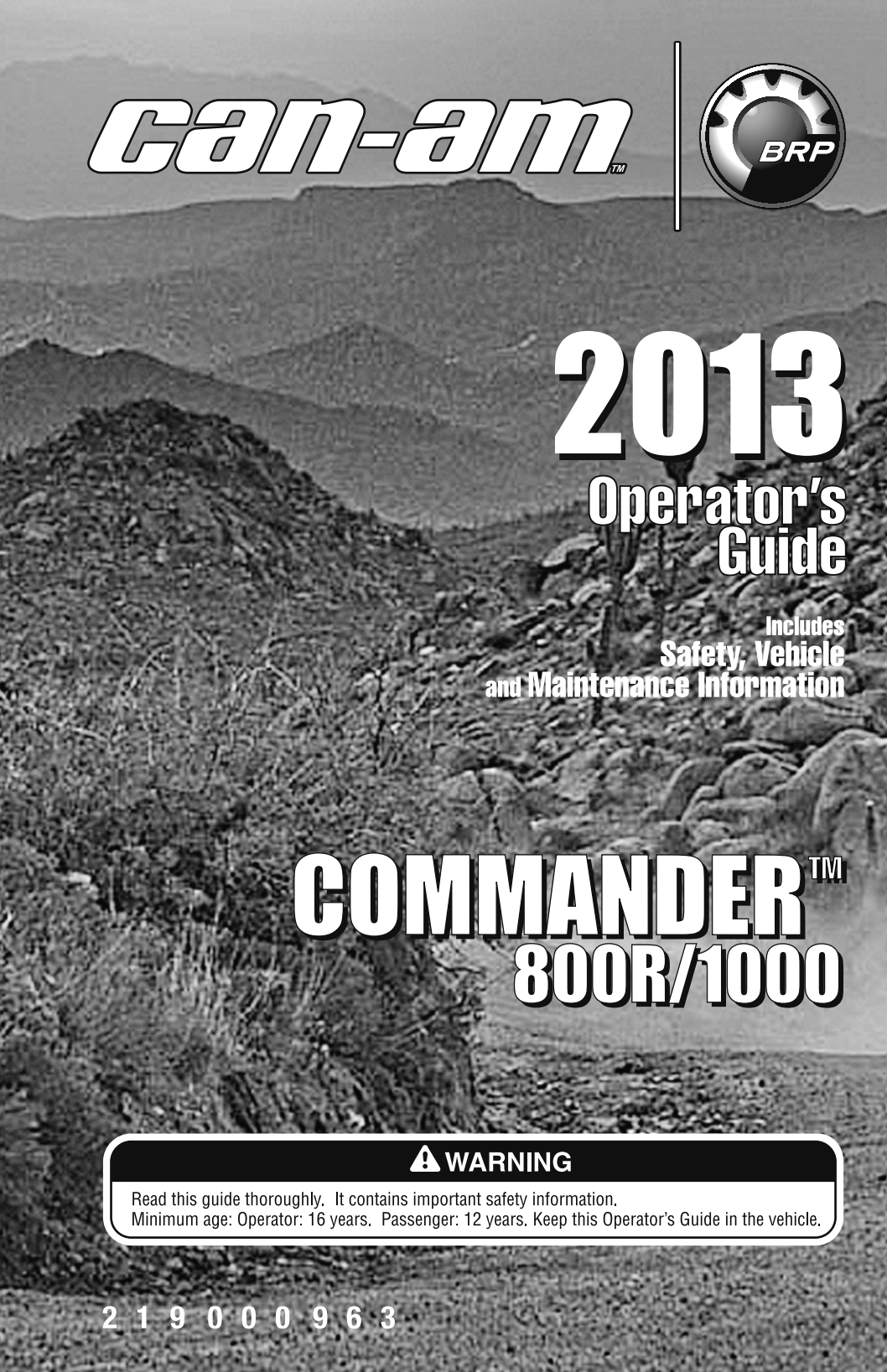

2013

Operator's Guide

Includes
Safety, Vehicle
and Maintenance Information

COMMANDER™ 800R/1000

⚠ WARNING

Read this guide thoroughly. It contains important safety information.
Minimum age: Operator: 16 years. Passenger: 12 years. Keep this Operator's Guide in the vehicle.

2 1 9 0 0 0 0 9 6 3

⚠ WARNING

YOUR VEHICLE CAN BE HAZARDOUS TO OPERATE. A collision or rollover can occur quickly, if you fail to take proper precautions, even during routine maneuvers such as turning and driving on hills or over obstacles.
For your safety, understand and follow all the warnings contained in this Operator's Guide and on the labels on your vehicle. **Failure to follow these warnings can result in SEVERE INJURY OR DEATH!**
Keep this Operator's Guide with the vehicle at all times.

⚠ WARNING

Disregarding any of the safety precautions and instructions contained in this Operator's Guide, *SAFETY DVD* video and on-product safety labels could result in severe injury including the possibility of death!

⚠ WARNING

This vehicle may exceed the performance of other vehicles you may have ridden in the past. Take time to familiarize yourself with your new vehicle.

CALIFORNIA PROPOSITION 65 WARNING

⚠ WARNING

This product contains or emits chemicals known to the state of California to cause cancer and birth defects or other reproductive harm.

In Canada, products are distributed by Bombardier Recreational Products Inc. (BRP).

In USA, products are distributed by BRP US Inc.

The following trademarks are the property of Bombardier Recreational Products Inc.:

Can-Am™ D.E.S.S.™ Commander™ Rotax® TTI™ XPS™ DPS™ ACS™

This document contains the trademark of the following company:

Garmin®, Garmin logo, City Navigator® and MapSource™ are trademarks of Garmin Ltd or its subsidiaries.

MicroSD™ and SD™ are trademarks of SanDisk or its subsidiaries.

† Visco-Lok is a trademark of GKN Viscodrive GmbH.

tmo2013-001 en
®™ and the BRP logo are trademarks of Bombardier Recreational Products Inc. or its affiliates.
©2012 Bombardier Recreational Products Inc. and BRP US Inc. All rights reserved.

FOREWORD

Deutsch	Dieses Handbuch ist möglicherweise in Ihrer Landessprache verfügbar. Bitte wenden Sie sich an Ihren Händler oder besuchen Sie: **www.operatorsguide.brp.com**.
English	This guide may be available in your language. Check with your dealer or go to: **www.operatorsguide.brp.com**.
Español	Es posible que este manual esté disponible en su idioma. Consulte a su distribuidor o visite: **www.operatorsguide.brp.com**.
Français	Ce guide peut être disponible dans votre langue. Vérifier avec votre concessionaire ou aller à: **www.operatorsguide.brp.com**.
Nederlands	Deze handleiding kan beschikbaar zijn in uw taal. Vraag het aan uw dealer of ga naar: **www.operatorsguide.brp.com**.
Norsk	Denne boken kan finnes tilgjengelig på ditt eget språk. Kontakt din forhandler eller gå til: **www.operatorsguide.brp.com**.
Português	Este manual pode estar disponível em seu idioma. Fale com sua concessionária ou visite o site: **www.operatorsguide.brp.com**.
Suomi	Käyttöohjekirja voi olla saatavissa omalla kielelläsi. Tarkista jälleenmyyjältä tai käy osoitteessa: **www.operatorsguide.brp.com**
Svenska	Denna bok kan finnas tillgänglig på ditt språk. Kontakta din återförsäljare eller gå till: **www.operatorsguide.brp.com**.

Congratulations on your purchase of a new Can-Am™ side-by-side vehicle. It's backed by the BRP limited warranty and a network of authorized Can-Am dealers ready to provide the parts, accessories or service you may require.

At delivery, you were informed of the warranty coverage and signed the *PREDELIVERY CHECK LIST* to ensure your new vehicle was prepared to your entire satisfaction.

Your dealer is committed to your satisfaction. If you need more information, please ask your dealer.

Know Before you Go

To learn how to reduce the risk of accident for you or bystanders, read this Operator's Guide before you operate the vehicle.

Also, read all safety labels on your vehicle and watch the *SAFETY DVD* video.

Failure to follow the warnings contained in this Operator's Guide can result in SERIOUS INJURY or DEATH.

Safety Messages

The types of safety messages, what they look like and how they are used in this guide are explained as follows:

The safety alert symbol ⚠ indicates a potential injury hazard.

⚠ WARNING

Indicates a potential hazard which, if not avoided, could result in serious injury or death.

⚠ CAUTION Indicates a hazardous situation which, if not avoided, could result in minor or moderate injury.

NOTICE Indicates an instruction which, if not followed, could result in severely damaged vehicle components or other property.

About this Operator's Guide

This Operator's Guide has been prepared to acquaint the owner/operator of a new vehicle with the various vehicle controls, maintenance and safe operating instructions. It is indispensable for the proper use of the product.

Keep this Operator's Guide in the vehicle as you can refer to it for things such as maintenance, troubleshooting and instructing others.

Note that this guide is available in several languages. In the event of any discrepancy, the English version shall prevail.

If you want to view and/or print an extra copy of your Operator's Guide, simply visit the following website **www.operatorsguide.brp.com**.

The information contained in this document is correct at the time of publication. BRP, however, maintains a policy of continuous improvement of its products without imposing upon itself any obligation to install them on products previously manufactured. Due to late changes, some differences between the manufactured product and the descriptions and/or specifications in this guide may occur. BRP reserves the right at any time to discontinue or change specifications, designs, features, models or equipment without incurring any obligation upon itself.

This Operator's Guide and the *SAFETY DVD* video should remain with the vehicle when it is sold.

TABLE OF CONTENTS

FOREWORD **1**
Know Before you Go 1
Safety Messages 1
About this Operator's Guide 2

SAFETY INFORMATION

GENERAL PRECAUTIONS **8**
Avoid Carbon Monoxide Poisoning 8
Avoid Gasoline Fires and Other Hazards 8
Avoid Burns from Hot Parts 8
Accessories and Modifications 8
SAFE OPERATION - RESPONSIBILITIES **9**
Owner - Be Responsible 9
Operator - Be Qualified and Responsible 9
Riding Carefully 10
Occupant Restraint System 10
Terrain Condition 10
PRE-RIDE INSPECTION **12**
Pre-Ride Inspection Check List 12
PREPARE TO RIDE **15**
Before you Ride 15
Riding Gear 15
AVOID ACCIDENTS **17**
Avoid Rollovers and Tipovers 17
Avoid Collisions 18
RIDING YOUR VEHICLE **19**
Practice Exercises 19
Off-Road Operation 20
General Riding Techniques 20
MOVING LOADS AND DOING WORK **25**
Working with your Vehicle 25
Carrying Loads 25
Hauling a Load 28
Pulling a Trailer 28
IMPORTANT ON-PRODUCT LABELS **29**
Hang Tag 29
Safety Labels 29
Compliance Labels 38

VEHICLE INFORMATION

PRIMARY CONTROLS **40**
1) Steering Wheel 41

PRIMARY CONTROLS (cont'd)
2) Accelerator Pedal 41
3) Brake Pedal 41
4) Shift Lever 42
SECONDARY CONTROLS 43
1) Ignition Switch and Keys 44
2) Engine Start Button 45
3) Low/High Beam Headlight Switch 45
4) 2WD/4WD Switch 46
5) Sport Switch 46
6) ACS Switch 46
7) Winch Switch 46
8) Override Switch 47
MULTIFUNCTION GAUGE (LCD) 49
Multifunction Gauge Description 49
Multifunction Gauge Modes 50
Navigating in the LCD Gauge 53
Gauge Setup 53
MULTIFUNCTION GAUGE (ANALOG/DIGITAL) 55
Multifunction Gauge Description 55
Gauge Setup 59
EQUIPMENT 60
1) Tilt Steering 62
2) Cup Holders 62
3) Passenger Handholds 62
4) Glove Box 63
5) Tool Kit 63
6) Winch Remote Control 63
7) Footrests 63
8) Side Nets 63
9) Shoulder Guards 64
10) Seat Belts 64
11) Driver's Seat 64
12) Passenger Seat 65
13) Fuel Reservoir Cap 65
14) Winch 65
15) Cargo Box 66
16) Cargo Box Tilt Release Handles 66
17) Anchoring Hooks 66
18) Upper Tailgate 67
19) Lower Tailgate 67
20) Hitch support 67
21) ACS Compressor 68
22) Radio 68
23) Radio AUX Output 69
24) GPS Receiver (Global Positioning System) 69
24) Rear Net 70

EQUIPMENT (cont'd)
25) Half Windshield 71
26) Full Roof 72
SUSPENSION 74
Suspension Adjustment Guidelines 74
Suspension Factory Settings 74
Suspension Adjustments 75
Shock Air Pressure Adjustment (LTD Models with ACS) 77
FUEL 81
Recommended Fuel 81
Vehicle Fueling Procedure 81
Fueling a Gasoline Container 82
BREAK-IN PERIOD 83
Operation During Break-In 83
BASIC PROCEDURES 84
Starting the Engine 84
Shifting the Transmission 84
Stopping the Engine and Parking the Vehicle 84
SPECIAL PROCEDURES 85
What to do if Water is Suspected to be in the CVT 85
What to do if Battery is Drained out 85
What to do if Vehicle Rolled Over 85
What to do if Vehicle is Submerged 85
TRANSPORTING THE VEHICLE 86
LIFTING AND SUPPORTING THE VEHICLE 87
Front of Vehicle 87
Rear of Vehicle 87

MAINTENANCE

BREAK-IN INSPECTION 90
MAINTENANCE SCHEDULE 93
MAINTENANCE PROCEDURES 96
Engine Air Filter 96
CVT Air Filter 98
Engine Oil 100
Oil Filter 101
Radiator 102
Engine Coolant 102
Muffler Spark Arrester 107
Gearbox Oil 108
Spark Plugs 109
Battery 110
Fuses 111
Lights 111

MAINTENANCE PROCEDURES (cont'd)
Drive Shaft Boot and Protector 113
Wheel Bearing 114
Wheels and Tires 114
Suspensions 117
Brakes 118
VEHICLE CARE 120
Post-Operation Care 120
Vehicle Cleaning and Protection 120
STORAGE AND PRESEASON PREPARATION 121

TECHNICAL INFORMATION

VEHICLE IDENTIFICATION 124
Vehicle Identification Number 124
Engine Identification Number 124
NOISE EMISSION CONTROL SYSTEM REGULATION 125
EC-DECLARATION OF CONFORMITY 126
SPECIFICATIONS 127

TROUBLESHOOTING

TROUBLESHOOTING GUIDELINES 136
MESSAGES IN MULTIFUNCTION GAUGE 140

WARRANTY

BRP LIMITED WARRANTY USA AND CANADA: 2013 CAN-AM® SSV 142
BRP INTERNATIONAL LIMITED WARRANTY: 2013 CAN-AM® SSV 146
BRP LIMITED WARRANTY FOR THE EUROPEAN ECONOMIC AREA: 2013 CAN-AM® SSV 150

CUSTOMER INFORMATION

PRIVACY INFORMATION 156
CHANGE OF ADDRESS/OWNERSHIP 157

SAFETY INFORMATION

GENERAL PRECAUTIONS

Avoid Carbon Monoxide Poisoning

All engine exhaust contains carbon monoxide, a deadly gas. Breathing carbon monoxide can cause headaches, dizziness, drowsiness, nausea, confusion and eventually death.

Carbon monoxide is a colorless, odorless, tasteless gas that may be present even if you do not see or smell any engine exhaust. Deadly levels of carbon monoxide can collect rapidly, and you can quickly be overcome and unable to save yourself. Also, deadly levels of carbon monoxide can linger for hours or days in enclosed or poorly ventilated areas. If you experience any symptoms of carbon monoxide poisoning, leave the area immediately, get fresh air and seek medical treatment.

To prevent serious injury or death from carbon monoxide:

– Never run the vehicle in poorly ventilated or partially enclosed areas such as garages, carports or barns. Even if you try to ventilate engine exhaust with fans or open windows and doors, carbon monoxide can rapidly reach dangerous levels.
– Never run the vehicle outdoors where engine exhaust can be drawn into a building through openings such as windows and doors.

Avoid Gasoline Fires and Other Hazards

Gasoline is extremely flammable and highly explosive. Fuel vapors can spread and be ignited by a spark or flame many feet away from the engine. To reduce the risk of fire or explosion, follow these instructions:

– Use only an approved gasoline container to store fuel.
– Never fill the gasoline container in the vehicle cargo box or on the vehicle - an electrical static discharge may ignite the fuel.
– Strictly adhere to instructions in *FUELING PROCEDURE*.
– Never start or operate the engine if the fuel cap is not properly installed.

Gasoline is poisonous and can cause injury or death.

– Never siphon gasoline by mouth.
– If you swallow gasoline, get any in your eye(s), or inhale gasoline vapor, see a doctor immediately.

If gasoline spills on you, wash with soap and water and change your clothes.

Avoid Burns from Hot Parts

Certain components become hot during operation. Avoid contact with those parts during and shortly after operation to avoid burns.

Accessories and Modifications

Do not make unauthorized modifications, or use attachments or accessories that are not approved by BRP. Since these changes have not been tested by BRP, they may increase the risk of crash or injury, and can render the vehicle illegal. For example, modifications such as different tires can affect the center-of-gravity and increase the risk of rollover.

See your authorized Can-Am dealer for available accessories for your vehicle.

SAFE OPERATION - RESPONSIBILITIES

This is a high performance off-road vehicle. Operators must be responsible and use care to avoid rollovers, tipovers, collisions, and other accidents. Even with vehicle safety features (such as protective structure, seat belts, side nets) and protective gear (such as a helmet), there is always a risk of injury or death in these accidents. To reduce the risk of serious injury or death, follow the rules in this section.

Owner - Be Responsible

Read this Operator's Guide and watch the *SAFETY DVD* video.

Always inspect and confirm the safe operating condition of your vehicle prior to ride. Always follow the maintenance schedule described in this Operator's Guide.

Never allow anyone to operate your vehicle unless they are responsible and can be trusted with a high performance vehicle. Consider supervising new or young operators and setting rules and limits (e.g., whether they can carry a passenger, what they may do with the vehicle, where they may ride, etc.) for anyone using your vehicle.

Select the appropriate key (see *IGNITION SWITCH AND KEYS*) based on the operator's experience, vehicle use and environment.

Discuss the safety information with anyone who will be using the vehicle. Be sure that all operators and passengers meet the qualifications below and agree to follow the safety information. Help users become familiar with the vehicle.

Operator - Be Qualified and Responsible

Read this Operator's Guide and watch the *SAFETY DVD* video.

Become completely familiar with the operational controls and the general operation of the vehicle.

Take a training course if available (contact an authorized Can-Am dealer to find out about training course availability as well as on the internet at http://www.rohva.org/), and perform the practice exercises in *PRACTICE EXERCISES* section. Practice driving in a suitable area free of hazards and feel the response of each control. Drive at low speeds. Higher speeds require greater experience, knowledge and suitable riding conditions.

Be at least 16 years of age.

Be tall enough to be properly seated: back against the backrest with the seat belt fastened, to hold the steering wheel with both hands and still be able to reach the full stroke of brake and accelerator pedals with the right foot and to firmly plant left foot on the footrest.

Have a proper driver's license in accordance with local laws.

Never operate this vehicle after using drugs or alcohol, or if tired or ill. These slow reaction time and impair judgment.

Carrying Passenger

Only carry one passenger. The passenger must be properly seated in the cockpit.

The passenger must be at least 12 years old and tall enough to always be properly seated: back against the backrest with seat belt fastened, holding both handholds, and feet firmly planted - right foot on the footrest and the left foot on the vehicle floor.

Never carry a passenger who has used drugs or alcohol, or is tired or ill. These slow reaction time and impair judgment.

Instruct the passenger to read the vehicle's safety labels.

Never carry a passenger if you judge his ability or judgement insufficient to concentrate on the terrain conditions

and adapt accordingly. More specifically for side-by-side vehicles, the passenger must also pay constant attention to the terrain ahead and be able to brace for bumps.

Riding Carefully

- This vehicle handles differently from other vehicles. A collision or rollover can occur quickly, during abrupt maneuvers such as doing sharp turns, acceleration or deceleration and driving on hills or over obstacles, if you fail to take proper precautions.
- Never operate at excessive speeds. Always go at a speed that is proper for the terrain, visibility, and operating conditions, and your experience.
- Never attempt jumps, side slides, donuts or any other stunts.
- Never attempt rapid acceleration or deceleration when performing a sharp turn. This may result in a roll over.
- Never attempt skidding or sliding. If vehicle starts to skid or slide, counter steer in the direction of skidding or sliding. On extremely slippery surfaces, such as ice, go slowly and be very cautious in order to reduce the chance of skidding out of control.
- Always be sure there are no obstacles or people behind the vehicle when you operate in reverse. Pay attention to blind spots. When it is safe to proceed in reverse, go slowly.
- Never exceed the stated load limits for this vehicle. Cargo must be properly secured. Reduce speed, allow for greater braking distance and follow other instructions in *MOVING LOADS AND DOING WORK* subsection.
- Always remember that this vehicle is heavy! Its pure weight alone may entrap you should it tip or rollover.

Occupant Restraint System

- This vehicle is designed to carry one driver and one passenger, both wearing proper protective gears (refer to *RIDING GEAR* in this section).
- The driver and passenger must latch the side nets and wear the seat belts at all times when riding.

Terrain Condition

- This vehicle is not designed to ride on paved surfaces; if you must shortly use the vehicle on such surfaces, avoid abrupt inputs to steering wheel, accelerator and brake pedals.
- Always go slowly and be extra careful when operating on unfamiliar terrain. Always be alert to changing terrain conditions when operating this vehicle. Take the time to learn how the vehicle performs in different environments.
- Never operate on excessively rough, slippery or loose terrain until you have learned and practiced the skills necessary to control this vehicle on such terrain. Always be especially cautious on these kinds of terrain.
- Never operate this vehicle on hills too steep for the vehicle or your abilities. Practice on small inclines.
- Always follow proper procedures for climbing or going down hills as described in *RIDING THE VEHICLE* subsection. Check the terrain carefully before you start up or down any hill. Never climb or descend hills with excessively slippery or loose surfaces. Never go over the top of any hill at high speed.
- Never attempt steep hills or side hilling when pulling a trailer.
- Always check for obstacles before operating in a new area. Always follow proper procedures when operating over obstacles as described in *RIDING THE VEHICLE* subsection.

– Never operate this vehicle in fast flowing water or in water deeper than specified in *RIDING THE VEHICLE* subsection. Remember that wet brakes may have reduced stopping ability. Test your brakes after leaving water. If necessary, apply them several times to let friction dry out the brakes.
– Always ensure to properly park the vehicle on the flattest terrain section available. Put shift lever in PARK, stop engine and remove key before leaving the vehicle.
– Never assume that the vehicle will go everywhere safely. Sudden changes in terrain caused by holes, depressions, banks, softer or harder "ground" or other irregularities may cause the vehicle to topple or become unstable. To avoid this, slow down and always observe the terrain ahead. If the vehicle does begin to topple or rollover, the best advice is to immediately steer in the direction of the rollover! Never attempt to prevent a rollover with your arms or legs. You should keep your limbs inside the cage.

PRE-RIDE INSPECTION

Always inspect and confirm the safe operating condition of your vehicle prior to ride. Always follow the maintenance schedule described in this Operator's Guide.

⚠ WARNING

Perform a pre-ride inspection before each ride to detect any potential problem that could occur during operation. The pre-ride inspection can help you monitor component wear and deterioration before they become a problem. Correct any problem that you discover to reduce the risk of a breakdown or crash. See an authorized Can-Am dealer as necessary.

Before using this vehicle, the operator should always perform the following pre-ride inspection check list.

Pre-Ride Inspection Check List

What to Do Before Starting the Engine (Key OFF)

ITEMS TO BE INSPECTED	INSPECTION TO PERFORM	✔
Tires	Check tire pressure and condition. – Front: MIN 69 kPa (10 PSI), LOADED 83 kPa (12 PSI) – Rear: MIN 83 kPa (12 PSI), LOADED 152 kPa (22 PSI)	
Wheels	Check wheels and lug nuts for damage.	
Radiator	Check cleanliness of the radiator.	
Engine oil	Check engine oil level.	
Coolant	Check coolant level.	
Engine Air filter	Inspect the engine air filter.	
CVT Air filter	Inspect the CVT air filter (when riding in severe conditions).	
Drive shaft boots	Check drive shaft boots and protectors condition.	
Cargo and load	Cargo Load: If you transport a cargo, respect the maximum loading capacity of 272 kg (600 lb). Ensure cargo is properly secured to the rear cargo box. Vehicle Load: Ensure that total load on the vehicle (including operator, passenger, cargo, tongue weight and added accessories) does not exceed 363 kg (800 lb).	
	If you are pulling a trailer or another equipment: – Check hitch and trailer ball condition. – Respect the tongue capacity and towing capacity. – Ensure trailer is properly secured to hitch.	

ITEMS TO BE INSPECTED	INSPECTION TO PERFORM	✔
Rear cargo box	Check if the cargo box is properly latched.	
	Check if both tail gates are properly latched.	
Chassis and suspension	Check underneath vehicle for any debris on chassis or suspension and clean them properly.	

What to Do Before Starting the Engine (Key ON)

ITEMS TO BE INSPECTED	INSPECTION TO PERFORM	✔
Gauge	Check operation of indicator lamps in gauge (during first few seconds of key ON).	
	Check for messages in gauge.	
Lights	Check operation and cleanliness of headlights and taillight.	
	Check operation of high and low beam.	
	Check operation of brake light.	
Seats, side nets and seatbelts	Check if seats are properly latched.	
	Check side nets for any damage. Have the nets replaced if any damage is found. Fasten both side nets and confirm that they latch securely. Use the adjustment strap to tighten the net as required.	
	Check seatbelts for any damage. Fasten seatbelts and confirm that they latch securely.	
Accelerator pedal	Press on the accelerator pedal a few times to ensure it operates freely and it returns to the rest position when released.	
Brake pedal	Press down on the brake pedal and make sure you feel firm resistance and that it fully returns to position when released.	
Fuel level	Check the fuel level.	

What to Do After the Engine is Started

ITEMS TO BE INSPECTED	INSPECTION TO PERFORM	✔
Steering	Check if steering operates freely by completely turning it from side to side.	
Ignition switch	Turn the ignition switch to OFF to verify if engine will shut down. Restart engine.	
Shift lever	Check operation of shift lever (P, R, N, H and L).	
2WD/4WD selector	Check operation of 2WD/4WD selector.	
Brakes	Drive forward slowly a few feet and apply brakes. The brake pedal must feel firm when applied. The pedal must return to rest position when released. The brakes must respond adequately to the driver's input.	

Before you Ride

Perform pre-ride inspection to confirm the safe operating condition of your vehicle. Refer to *PRE-RIDE INSPECTION* subsection.

Driver and passenger must:

– Be properly seated.
– Latch both side nets and fasten seat belt.
– Wear appropriate riding gear. (Refer to *RIDING GEAR* subsection below.)

Riding Gear

It is important that the operator and passenger always wears appropriate protective clothing and apparel, including:

– An approved helmet
– Eye protection
– Boots
– Gloves
– A long sleeved shirt or jacket
– Long pants.

Depending on conditions, anti-fogging goggles may be required.

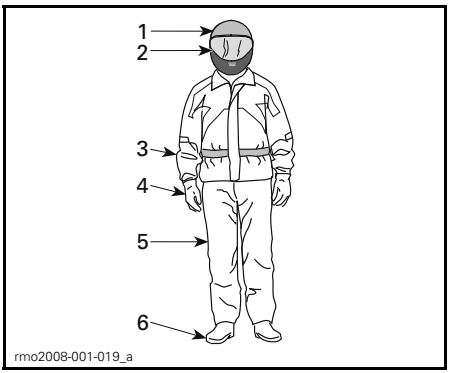

RIDING GEAR
1. *Approved helmet*
2. *Eye and face protection*
3. *Long sleeves shirt or jacket*
4. *Gloves*
5. *Long pants*
6. *Boots (over-the-ankle footwear)*

Weather conditions should help you decide how to dress. To maximize comfort and avoid frostbites in winter, dress for the coldest weather expected. Thermal underwear next to the skin also provides good insulation.

Never wear any loose clothing that may get entangled in the vehicle or on tree branches and shrubs.

Helmets and Eye Protection

Helmets protect the head and brain from injury. Even with the vehicle's cage and side nets, objects can enter the cockpit and strike the head, or the head can strike the cage itself or objects outside the vehicle. Even the best helmet is no guarantee against injury, but statistics indicate that helmet use significantly reduces the risk of brain injury. So, be safe and always wear a helmet while riding.

Choosing a Helmet

Helmets should be manufactured to meet the appropriate standard in your state, province or country and should fit properly.

A helmet with face protection is a better choice as it protects also against frontal impacts. It can also protect against debris, stones, insects, the elements, etc.

An open-face helmet does not offer the same protection for the face and chin. If you wear an open-face helmet, you should use a snap-on face shield and/or a pair of goggles. Ordinary glasses or sunglasses are not sufficient eye protection for riders. They can shatter or fly off, and they allow wind and airborne objects to reach the eyes.

For winter riding conditions, a stocking type cap, balaclava and face mask should always be carried or worn.

Use tinted face shields or goggles in the daytime only; do not use them at night or in poor illumination. Do not use them if they impair your ability to discern color.

Other Riding Gear

Footwear

Always wear closed toe footwear. Sturdy over-the-ankle boots with non-slip soles offer more protection and allow you to plant your foot properly on footrest.

Avoid long shoelaces that can be tangled in the accelerator or brake pedals.

For winter riding conditions, rubber soled boots with either a nylon or leather uppers, with removable felt liners are best suited.

Avoid rubber boots. Rubber boots may get trapped behind or between pedals, impairing the proper operation of brake and accelerator pedals.

Gloves

Full-fingered gloves protect hands from the wind, sun, heat, cold and flying objects. Gloves that fit snugly will improve grip on the steering wheel and help reduce hand fatigue. Sturdy, reinforced motorcycle or ATV gloves help protect hands better in the event of an accident or a rollover. If gloves are too bulky, it may be difficult to operate the controls.

For winter riding conditions, hands should be protected by a pair of snowmobile gloves which have sufficient insulation and allow use of thumbs and fingers for operation of controls.

Jackets, Pants and Riding Suits

Wear a jacket or a long sleeved shirt and long pants, or a full riding suit. Quality ATV-type protective gear will provide comfort, and it can help you avoid being distracted by adverse environmental elements. In case of a crash, good quality protective gear made of sturdy material may prevent or reduce injury.

In cool-weather riding, protect yourself against hypothermia. Hypothermia, a condition of low body temperature, can cause loss of concentration, slowed reactions and loss of smooth, precise muscle movement. In cool conditions, proper protective gear like a windproof jacket and insulated layers of clothing are essential. Even while riding at moderate temperatures, you can feel very cold due to the wind.

Protective gear that is appropriate for cold-weather riding may be too hot when stopped. Dress in layers so that clothing can be removed as desired. Topping the protective gear with a windproof outer layer can prevent cold air from reaching the skin.

Rain Gear

If you must ride in wet weather, a rain suit or a waterproof riding suit is recommended. On long rides, it is a good idea to carry rain gear. A dry rider will be much more comfortable and alert.

Hearing Protection

Long-term exposure to wind and engine noise when riding can cause permanent hearing loss. Properly worn hearing protective devices such as earplugs can help prevent hearing loss. Check local laws before using any hearing protective devices.

Avoid Rollovers and Tipovers

Side-by-side vehicles handle differently from other vehicles. Side-by-side vehicles are designed to handle off-road terrain (for example, their wheel base and track width, ground clearance, suspension, drivetrain, tires, etc.), and, as a result, can overturn in situations where vehicles designed for use primarily on paved or smooth terrain may not.

A rollover or other accident can occur quickly during abrupt maneuvers such as sharp turns or hard acceleration or deceleration when turning, or when driving on hills or over obstacles. Abrupt maneuvers or aggressive driving can cause rollovers or loss of control even in flat open areas. If the vehicle rolls over, any part of your body (such as arms, legs, or head) outside of the cockpit can be crushed and trapped by the cage or other parts of the vehicle. You can also be injured by impact with the ground, cockpit or other objects.

To reduce the risk of rollovers:

– Use care when turning.
  - Do not turn the steering wheel too far or too fast for your speed and environment. Adjust steering inputs according to your speed and environment.
  - Slow down before entering a turn. Avoid hard braking during a turn.
  - Avoid sudden or hard acceleration when turning, even from a stop or low speed.
– Never attempt donuts, skids, slides, fishtails, jumps, or other stunts. If vehicle starts to skid or slide, steer in the direction of the skid or slide. Never slam the brakes and lock the wheels.
– Avoid paved surfaces. This vehicle is not designed to operate on paved surfaces and is more likely to roll over. If you must drive on pavement, turn gradually, go slowly, and avoid abrupt acceleration and braking.

This vehicle can roll over sideways or tip over forward or backwards on slopes or uneven terrain.

– Avoid side hilling (driving along the slope rather than up or down a hill). When possible, drive straight up and down inclines rather than across them. If you must side hill, use extreme caution and avoid slippery surfaces, objects, or depressions. If you feel the vehicle start to rollover or slide sideways, steer downhill if possible.
– Avoid steep hills and follow procedures in this guide for climbing and descending hills.
– Sudden changes in terrain such as holes, depressions, banks, softer or harder ground or other irregularities may cause the vehicle to tip or become unstable. Observe the terrain ahead and slow down in areas of uneven terrain.

This vehicle will handle differently when carrying or pulling a load.

– Reduce speed and follow instructions in this manual for carrying cargo or pulling a trailer.
– Avoid hills and rough terrain.
– Allow more distance to stop.

Be Prepared in Case of Rollover

– Fasten side net and seat belt to help you avoid sticking out arms or legs.

– Never grab the cage while riding. Hands can be crushed between the cage and the ground in a rollover. Keep hands on the steering wheel or handholds.
– Never try to stop a rollover using your arms or legs. If you think that the vehicle may tip or roll, the driver should keep both hands on the steering wheel and the left foot firmly planted on the footrest. The passenger should keep both hands on the handholds and both feet firmly planted on the floor.

Avoid Collisions

This vehicle can reach high speeds. At higher speeds, there is an increased risk of losing control, particularly in challenging off-road conditions, and the risk of injury in a collision is greater. Never operate at excessive speeds. Always go at a speed that is proper for the terrain, visibility, and operating conditions, and your experience. Consider reserving use of the performance key for situations in which full speed and acceleration capability are appropriate.

Never operate this vehicle on any public street, road or highway, even dirt or gravel ones. Riding your vehicle on roads or highways could result in a collision with another vehicle. This vehicle is not designed for operation on roads. For example, it does not meet motor vehicle safety standards that apply to automobiles. In many jurisdictions it is not legal to operate this vehicle on public roads.

This vehicle does not have the same kind of protection for collisions as a car; for example, there are no air bags, the cockpit is not fully enclosed, and it is not designed for collisions with other vehicles. Therefore, it is particularly important to fasten seat belts and side nets and wear an approved helmet.

Practice Exercises

Before you go out for a ride, it is very important to familiarize yourself with the handling of your vehicle by practicing in a controlled environment. If possible, it is also a very good idea to take a more formal training course to sharpen your skills and increase your knowledge of the vehicle.

Find a suitable area to practice and perform the following exercises. It should be at least 45 m (150 ft) by 45 m (150 ft) free of obstacles like trees and rocks. Once you've selected a suitable permitted location, proceed with the following practice exercises.

Turning Exercises

Turning is one of the most frequent causes of accidents. It is easier for the vehicle to lose traction or rollover if you turn too sharply, or go too fast. Slow down when you approach a turn.

- First learn how to perform slight right turns at very low speeds. Release the throttle before turning and slowly reapply the throttle when turning.
- Repeat turning exercise but this time maintain the throttle at the level while turning.
- Finally, repeat turning exercise while accelerating slowly.
- Practice exercises turning on the other side.

Note how your vehicle reacts in these different exercises. We recommend releasing the throttle before entering a turn to help initiate directional change. You will feel the lateral force increasing with the speed and with your steering input. The lateral force should be maintained as low as possible to make sure it does not cause the vehicle to roll over.

U Turn Exercises

Practice doing U turns.

- Accelerate slowly and while remaining at low speed, then gradually turn the steering wheel to the right until you have completed the U turn.
- Repeat U turn exercise with different steering inputs and always at a very low speed.
- Repeat U turn exercise on the other side.

As mentioned before in this guide, do not ride on paved surfaces as the vehicle behavior will not be the same, increasing the risk of rollover.

Braking Exercises

Practice braking to get familiar with the brake response.

- Do it at low speed first, then increase the speed.
- Practice braking in straight line at different speeds and different braking force.
- Practice emergency braking; optimal braking is obtained in straight line, with high force applied, without locking the wheels.

Remember, braking distance depends on vehicle speed, load and the type of surface. Also, the tires and brakes conditions play a major role.

Reverse Exercises

The next step involves using the reverse.

- Install 1 cone marker on both sides of the vehicle beside each rear wheel. Move the vehicle forward until you can see the cone markers, then stop the vehicle. Acknowledge the distance required to see obstacles behind you.
- Learn how the vehicle handles itself in reverse and reacts with steering inputs.

– Always perform this reverse exercise at slow speeds.
– Become familiar with the usage of the override function. Do not steer while using the override as it increases the risks of rollover.

Emergency Engine Stopping Exercise

Learn how to stop your engine quickly in an emergency situation.

– While running at low speed, simply turn the ignition key to the off position.

This is to familiarize you with the vehicle's reaction when the engine is turned off while driving and to develop this reflex.

Off-Road Operation

The very nature of off-road operation is dangerous. Any terrain, which has not been specially prepared to carry vehicles, presents an inherent danger where terrain substance, shape and steepness are unpredictable. The terrain itself presents a continual element of danger, which must be knowingly accepted by anyone venturing over it.

An operator who takes a vehicle off-road should always exercise the utmost care in selecting the safest path and keeping close watch on the terrain ahead of him. The vehicle should never be operated by anyone who is not completely familiar with the driving instructions applicable to the vehicle, nor should it be operated on steep or treacherous terrain.

General Riding Techniques

General Driving Tips

Care, caution, experience and driving skill are the best precautions against the hazards of vehicle operation.

Whenever there is the slightest doubt that the vehicle can safely negotiate an obstacle or a particular piece of terrain, always choose an alternate route.

In off-road operation, power and traction, not speed, are important. Never drive faster than visibility and your own ability to select a safe route permit. Always go slowly and be extra careful when operating on unfamiliar terrain. Always be alert to changing terrain conditions when operating this vehicle. Be especially cautious on excessively rough, slippery, icy or loose terrain.

Constantly watch the terrain ahead for sudden changes in slopes or obstacles, such as rocks or stumps, that may cause loss of stability, resulting in tip over or rollover.

Never operate the vehicle if the controls do not function normally. See an authorized Can-Am dealer.

To maintain proper control it is strongly advised that you keep your hands on the steering wheel and within easy reach of all controls. The same holds true for your feet. To minimize the possibility of any leg or foot injury, keep your left foot on the footrest and right foot on the floor at all times. Staying completely within the cockpit will also help keep you from striking objects outside the vehicle.

Watch for and avoid branches and other objects that could enter the cockpit and strike you or your passenger.

Operating in Reverse

When operating in reverse, check that the path behind the vehicle is free of people or obstacles. Pay attention to blind spots. When it is safe to proceed in reverse, go slowly and avoid sharp turns.

⚠ WARNING

Steering inputs in reverse operation increase the risk of rollover.

NOTE: In reverse operation, the engine RPM is limited thus limiting the vehicle reverse speed.

⚠ WARNING

When driving downhill in reverse, gravity can increase the vehicle speed above the set limited reverse speed.

Crossing Roads

If you have to cross a road, ensure to have complete visibility on both sides for incoming traffic and decide on exit point on other side of road. Drive in a straight line toward that point. Do not make sharp direction changes or abrupt accelerations as it may result in a rollover situation. Do not travel on sidewalks or bicycle trails as they are designated specifically for those uses.

Riding on Paved Surfaces

Avoid paved surfaces. This vehicle is not designed to operate on paved surfaces and is more likely to roll over. If you must drive on pavement, turn gradually, go slowly, and avoid abrupt acceleration and braking.

Shallow Water Crossing

Water can be a unique hazard. If it is too deep the vehicle may "float" and topple. Check the water depth and current before you attempt to cross any water. Water depth should not exceed 30 cm (12 in) for vehicle to safely cross the obstacle. Beware of slippery surfaces such as rocks, grass, logs, etc., both in the water and on its banks. A loss of traction may occur. Do not attempt to enter the water at high speed.

Water will affect the braking ability of your vehicle. Make sure you dry the brakes by applying them several times after the vehicle leaves the water.

Mud or marsh lands may be encountered near water. Be prepared for sudden "holes" or changes in depth. Similarly so, be watchful of hazards such as rocks, logs, etc., partially covered by vegetation.

Riding on Snow or Ice

When performing pre-ride inspection, pay special attention to locations on the vehicle where snow and/or ice accumulations may obstruct visibility of the tail lamp, clog ventilation openings, block the radiator and fan, and interfere with the movement of controls. Before starting with your vehicle, check the steering, accelerator and brake pedals for interference free operation.

Whenever this vehicle is ridden on a snow covered drive path, the tire grip is generally reduced causing the vehicle to react differently to control inputs from the operator. On low grip surfaces, the steering responses are not as crisp and precise, stopping distances are lengthened and acceleration is also affected. Slow down and do not "gun" the accelerator. This will only result in spinning of the tires and possibly in an over steering slide of the vehicle. Avoid hard braking. This will possibly result in a straight line slide of the vehicle. Again, the best advice is to safely reduce speed in anticipation of a maneuver to give yourself time and distance in order to keep control of the vehicle.

As you drive your vehicle over a loose snow covered surface, snow dust will be picked up in the wake turbulence of the moving vehicle and transported to contact and accumulate or melt on some exposed components including rotating parts like brake discs. Water, snow or ice may affect the response time of the brake system of your vehicle. Even when not required to reduce vehicle speed apply brakes frequently to prevent ice or snow accumulation and to dry brake pads and discs. While doing so in low risk driving situations you will test for grip level and keep yourself alerted to how the vehicle reacts to your control inputs. Always

keep brake and accelerator pedals and floor boards free of snow and ice. Frequently wipe snow off seat, steering wheel, headlights and tail lamps.

The depth of the snow cover may hide rocks, tree stumps or other objects and if it is wet may totally impede the drivability as the vehicle becomes bogged down or completely looses traction in slushy snow. Look far ahead and always be watchful of any visible clues that might indicate the presence of such obstacles. In doubt steer clear. Avoid driving on any frozen waterways before checking that the ice will safely support the vehicle, its riders and its load of cargo.

At the end of each ride it is a good practice to clean the vehicle and all moving components (brakes, steering components, drivelines, controls, radiator fan etc.) from any snow or ice accumulations. Wet snow will turn to ice during the shut down period and become more difficult to remove at the next pre-ride inspection.

Riding on Sand

Sand and riding on sand dunes is another unique experience but there are some basic precautions that should be observed. Wet, deep or fine sand may create a loss of traction and cause the vehicle to slide, drop off or become "bogged" down. If this occurs look for a firmer base. Again, the best advice is to slow down and be watchful of the conditions.

When riding in sand dunes it is advisable to equip the vehicle with an antenna type safety flag. This will help make your location more visible to others over the next sand dune. Proceed carefully should you see another safety flag ahead.

Riding on Gravel, Loose Stones or Other Slippery Surfaces

Riding on loose stones or gravel is very similar to riding on ice. They will affect the steering of vehicle, possibly causing it to slide and tip over especially at high speeds. In addition, braking distance may be affected. Remember that "gunning" the throttle or sliding may cause loose stones to be ejected rearwards into the path of another rider's way. Never do it deliberately.

If you do get into a slide or skid, it may help to turn the steering wheel into the direction of the skid until you regain control. Never jam the brakes and lock the wheels.

Crossing Obstacles

Obstacles on the "trail" should be traversed with caution. This includes rocks, fallen trees, and depressions. You should avoid them whenever possible. Remember that some obstacles are too large or dangerous to cross and should be avoided. As a guideline, never attempt to cross an obstacle higher than the ground clearance of the vehicle. Small rocks or small fallen trees may be safely crossed - approach obstacle at low speed and as much as possible at a right angle. Adjust speed without losing momentum and do not accelerate abruptly. Passenger must grasp handholds firmly and brace feet on the floor. Hold steering firmly without closing your fists around it and proceed. Be aware that the obstacle may be slippery or may move while crossing.

Hill Driving Conditions

When driving on hills or slopes, two things are highly important: be prepared for slippery surfaces or terrain variations and obstacles and brace yourself properly inside vehicle. If you climb or descend a hill that is too slippery or has too loose a surface, you can lose control. If you go over the top of a hill at high speed, you may not

have time to prepare for the terrain on the other side. Avoid parking on a slope. Always put the shift lever in PARK when stopped or parked, especially on an incline, to avoid rolling. If you must park on a steep incline, block the wheels using rocks or bricks.

Uphill Driving

Use the low range (L) for uphill driving.

Due to its configuration, this vehicle has very good traction even while climbing, so much so that tip over is possible before traction is lost. For example, it is common to encounter terrain situations where the top of the hill has eroded to a point that the hill peak rises very sharply. This vehicle is not designed to negotiate such a condition. Take an alternate route.

It is also wise to know the terrain condition on the other side of the hill or bank. All too often there exists a sharp drop-off that is impossible to negotiate or descend.

If you feel that the slope is getting too steep to climb, apply brakes to immobilize vehicle. Put shift lever in reverse (R), and back down the hill, barely releasing brakes to remain at low speed. Do not attempt to turn around. Never coast down hill while vehicle is in neutral. Do not perform hard braking as it increases the risk of tipover.

Downhill Driving

This vehicle can climb steeper slopes than it can descend safely. Therefore, it is essential to assure that a safe route exists to descend a slope before you climb it.

Decelerating while negotiating a slippery downhill slope could "toboggan" the vehicle, causing it to slide. Maintain steady speed and/or accelerate slightly to regain control. Never slam brakes and lock the wheels.

Side Hilling

Whenever possible, sidehilling (driving across a slope rather than up or down it) should be avoided. If necessary, do so with extreme caution. Side hilling on steep inclines could result in rollover. In addition, slippery or unfirm surfaces could result in uncontrollable side sliding. Avoid all objects or depressions that will intensify the raising of one side of the vehicle higher than the other, thus causing rollover. If you feel the vehicle start to rollover or slide sideways, steer downhill if possible.

Drop-Offs

This vehicle is not designed to negotiate drop-offs. It will "bottom-out" and usually stop if either the front or rear wheels are driven over a drop-off. If the drop is sharp or deep, the vehicle will nose dive and tip over.

Avoid negotiating drop-offs. Reverse and select an alternate route.

Recreational, Group and Distance Riding

Respect the rights and limitations of others. Stay away from areas designated for other types of off road use. This includes snowmobile trails, equestrian trails, cross country ski trails, mountain bike trails, etc. Never assume there are no other users on the trail. Always stay to the right of the trail and do not zig zag to one side of the trail then the other. Be prepared to stop or pull off to the side if another trail user appears in front of you.

Join a local side-by-side vehicle club. It will provide you with a map and advice or inform you where you can ride. If a club does not exist in your area, help to start one. Group riding and club activities provide a pleasurable, social experience. Never ride under the influence of alcohol or drugs, or tired or ill.

Always keep a safe distance from other riders. Your judgment of speed, terrain conditions, weather, mechan-

ical condition of your vehicle and the "trust in judgment" you have in others around you will help you make a better choice of appropriate safe distance. This vehicle, like any other motorized vehicle, cannot stop "on a dime".

Before you ride, tell someone where you are planning to travel and your expected time of return.

Depending on the length of your ride, carry additional tools or emergency equipment. Find out where you can get additional gasoline. Be prepared for the possible conditions you may encounter. An emergency first aid kit should always be a consideration.

Environment

One of the benefits of this vehicle is that it can take you off the beaten path away from most communities. However, you should always respect nature and the rights of others to enjoy it. Do not ride in environmentally sensitive areas. Do not drive over forest crops or shrubs, nor cut down trees or take down fencing, nor spin your wheels and destroy the terrain. "Tread Lightly".

Chasing wildlife is in many areas illegal. Wildlife can die of exhaustion after being chased by a motorized vehicle. If you encounter animals on the trail, stop and observe quietly and with caution. It will be one of the better memories of your life.

Observe the rule... "what you take in, carry out". Do not litter. Do not start campfires unless you have permission to do so, and then only away from dry areas. The hazards you may create on the trail may cause injury to others or yourself, even at a later date.

Respect farm lands. Always obtain the permission of the landowner before riding on private land. Respect crops, farm animals and property lines.

Finally, do not pollute streams, lakes or rivers and do not modify the engine or exhaust system, or remove any of its components as it will alter the vehicle emissions.

MOVING LOADS AND DOING WORK

Working with your Vehicle

Your vehicle can help you perform a number of different LIGHT tasks ranging from snow removal to pulling wood or carrying cargo. A variety of accessories are available from your authorized Can-Am dealer. To prevent possible injury, follow the instructions and warnings that accompany the accessory. Always respect the load limits of the vehicle. Overloading the vehicle can overstress the components and cause failure. Avoid overexerting yourself if you lift or pull heavy loads or manually push the vehicle.

Carrying Loads

Any load carried on the vehicle will affect the handling, stability and braking distance of the vehicle. Do not exceed the load limits of the vehicle, including the weight of operator, passenger, cargo, accessories and trailer tongue weight.

LOAD LIMIT OF THE VEHICLE	
363 kg (800 lb)	Includes occupants, cargo, tongue weight and added accessories

Following are examples of suitable total vehicle load distribution:

EXAMPLES OF SUITABLE VEHICLE TOTAL LOADS				
OPERATOR AND PASSENGER	CARGO BOX LOAD	ACCESSORIES	TONGUE WEIGHT	TOTAL VEHICLE LOAD
200 kg (441 lb)	70 kg (154 lb)	25 kg (55 lb)	68 kg (150 lb)	363 kg (800 lb)
100 kg (220 lb)	263 kg (580 lb)	0 kg (0 lb)	0 kg (0 lb)	363 kg (800 lb)

To reduce the risk to lose control or the load carried, follow these recommendations.

Vehicle Settings When Carrying Load

When the total load exceeds 180 kg (400 lb), including weight of operator, passenger, cargo, accessories and trailer tongue weight, inflate the tires to maximum pressure 83 kPa (12 PSI) Front, 152 kPa (22 PSI) Rear.

NOTE: When carrying heavy loads in cargo box readjust suspension accordingly.

NOTE: When carrying heavy loads in cargo box or pulling a trailer operate with the shift lever in L (low range).

Loading the Cargo Box

NOTICE When loading or unloading, do not exceed the weight limit of 100 kg (220 lb) on either tailgate.

Load cargo as low as possible – a higher load can raise the vehicle's center of gravity, which can reduce stability. Position cargo toward the front and center of the cargo box and as evenly as possible.

Secure the load to the tie down hooks inside cargo box. Use only the tie down hooks on the bottom of the cargo box; do not secure cargo to the cage or other part of the vehicle. If it is not properly secured, a load may slide or fall off, possibly striking occupants or bystanders; or it may shift during riding, affecting the handling of the vehicle.

Objects that are higher than the walls of the cargo bed may affect visibility for the driver and may act as projectiles in case of an accident. Loads that protrude sideways can get snagged or caught in bush, branches or other obstacles. Avoid covering and obstructing the brake lights with the cargo. Ensure no cargo protrudes outside the box and that cargo will not interfere with your visibility or control of the vehicle.

Do not overload cargo box.

Close both tailgates before operating.

MAXIMUM CARGO BOX LOADS		
CARGO BOX (TOTAL)	272 kg (600 lb)	Evenly distributed and safely secured. Loaded as low as possible to reduce height of center of gravity.
LOWER CARGO BOX	272 kg (600 lb)	Evenly distributed.
TOP CARGO BOX	181 kg (400 lb)	Evenly distributed on floor separator.
UPPER TAILGATE	100 kg (220 lb)	Only while loading cargo into cargo box. Never operate with tailgate open.
LOWER TAILGATE	100 kg (220 lb)	Only while loading cargo into cargo box. Never operate with tailgate open.

Following are examples of cargo box loading limits:

EXAMPLES OF CARGO BOX TOTAL LOADS		
CARGO BOX UPPER SECTION LOAD	CARGO BOX LOWER SECTION LOAD	TOTAL CARGO BOX LOAD
0 kg (0 lb)	272 kg (600 lb)	272 kg (600 lb)
100 kg (220 lb)	172 kg (380 lb)	272 kg (600 lb)
181 kg (400 lb)	91 kg (200 lb)	272 kg (600 lb)

Operating While Carrying a Load

Reduce your speed when carrying cargo and turn gradually. Avoid hills and rough terrain. Allow more distance for braking. This vehicle may require additional stopping distance if carrying heavy loads, especially on inclined surfaces.

Tilting the Cargo Box

The cargo box can be tilted to ease unloading. Use release handles on either side of cargo box.

tmo2011-001-518_a

1. RH release handle

NOTICE Always turn off engine when tilting the cargo box.

⚠ WARNING

- Always ensure no one is standing behind the cargo box before you actuate the release handle.
- The load weight may affect the operation of the cargo box tilting feature (tilting or lowering).

Be very careful with the operation of the tail gates and the cargo box as the load may have moved during transport.

To lower the cargo box, simply push it down into place.

⚠ WARNING

- Keep yourself and others clear of the cargo box and vehicle frame junction when lowering cargo box.
- Ensure to properly latch the cargo box and the tailgates before riding.
- Make sure you do not leave objects between lifted cargo box and vehicle frame to ensure proper latching of the cargo box when lowered.

tmo2011-001-503

FRONT SECTION OF INCLINED CARGO BOX FREE OF ANY OBJECTS

tmo2011-001-310_a

PUSH TO CLOSE
1. Hand guard

Hauling a Load

Never pull a load by attaching it to the cage; this can cause the vehicle to tip over. Use only the trailer hitch or winch (if installed) to pull a load.

When pulling loads with a chain or cable, ensure that there is no slack before starting and maintain tension while pulling.

When hauling a load, respect the maximum hauling capacity. See *PULLING A TRAILER* subsection.

⚠ WARNING

Slack can cause the chain or cable to break and snap back.

When pulling another vehicle, be sure that someone is controlling the pulled vehicle. They must brake and steer to prevent the vehicle from going out of control.

Before pulling loads with a winch, refer to the winch manufacturer's instructions.

Reduce your speed when hauling a load and turn gradually. Avoid hills and rough terrain. Never attempt steep hills. Allow more distance for braking, especially on inclined surfaces. Be careful not to skid or slide.

Pulling a Trailer

If a trailer is used behind the vehicle make sure that its hitch is compatible with the one on the vehicle. Make sure the trailer is horizontal with the vehicle. (In some instances a special extension may have to be installed on the vehicle hitch). Use security chains or cables to secure the trailer with the vehicle.

Improperly loading a trailer may cause loss of control. Respect the recommended maximum hauling capacity and maximum tongue load (Refer to *MAXIMUM HAULING CAPACITY* table). Make sure there is at least some weight on the tongue.

Always make sure load is evenly distributed and safely secured on the trailer; an evenly balanced trailer is easier to control.

Always put the shift lever to L (low range) for hauling a trailer – in addition to providing more torque, operating in low range helps account for the increased load on the rear tires.

When stopped or parked, block the vehicle and trailer wheels from possible movement.

Use caution when disconnecting a loaded trailer; it or its load may topple on you or others.

When hauling a trailer, respect the following maximum hauling capacity.

MAXIMUM HAULING CAPACITY

TYPE OF ATTACHMENT	TRAILER LOAD ALLOWED	TONGUE WEIGHT ALLOWED	NOTE
50.8 mm (2 in) X 50.8 mm (2 in) hitch ball support	680 kg (1,500 lb)	68 kg (150 lb)	Includes trailer and trailer load. Ensure to properly load the trailer so that tongue is always pushing on hitch support and not pulling on hitch ball.
38 mm (1.5 in) X 38 mm (1.5 in) hitch ball support and the appropriate hitch adapter	400 kg (882 lb)	40 kg (88 lb)	

IMPORTANT ON-PRODUCT LABELS

Hang Tag

This vehicle comes with a hang tag and labels containing important safety information.

Any person who rides this vehicle should read and understand this information before riding.

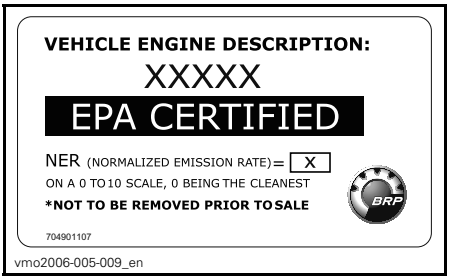

TYPICAL

Safety Labels

Read and understand all the safety labels on your vehicle.

These labels are affixed to the vehicle for the safety of the operator, passenger or bystanders.

The following labels are on your vehicle, and they should be considered permanent parts of the vehicle. If missing or damaged, they can be replaced free of charge. See an authorized Can-Am dealer.

NOTE: In the event of any discrepancy between this guide and the vehicle, the safety labels on the vehicle have precedence over the labels in this guide.

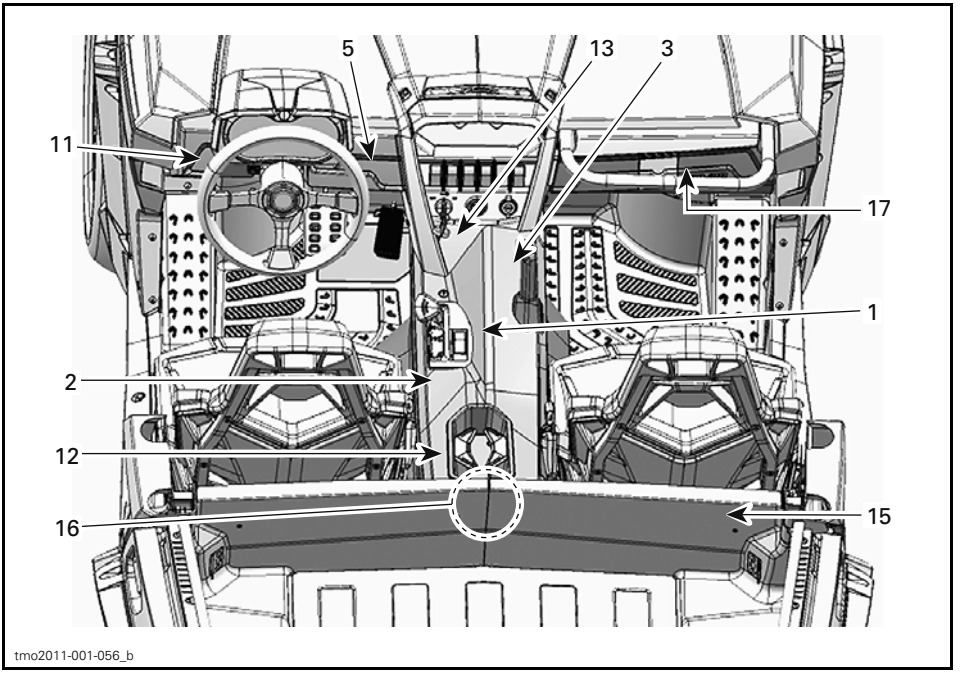
5
13
3
11
17
1
2
12
16
15
tmo2011-001-056_b

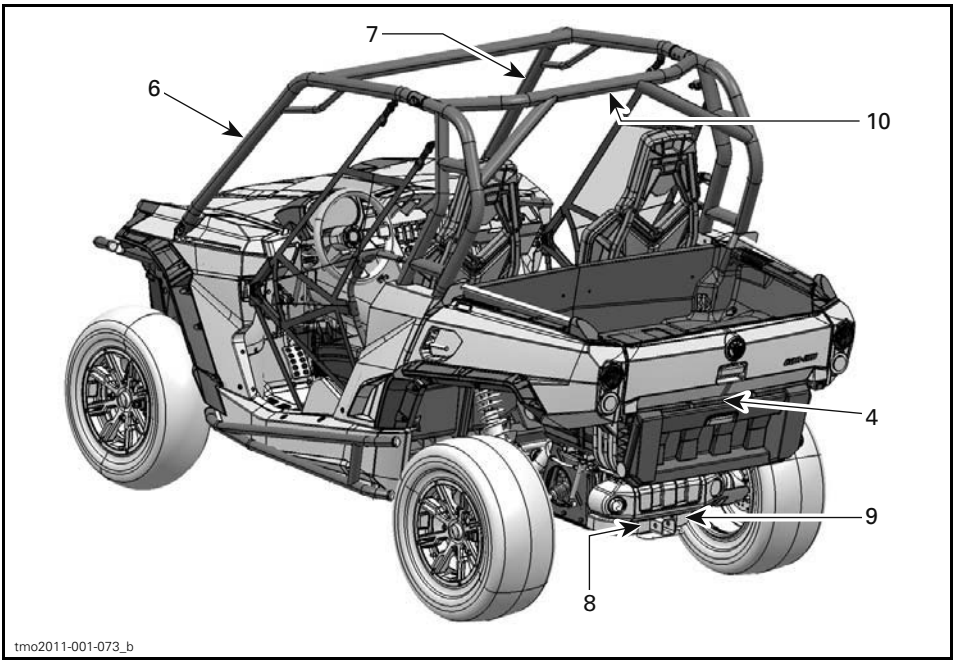
7
6
10
4
9
8
tmo2011-001-073_b

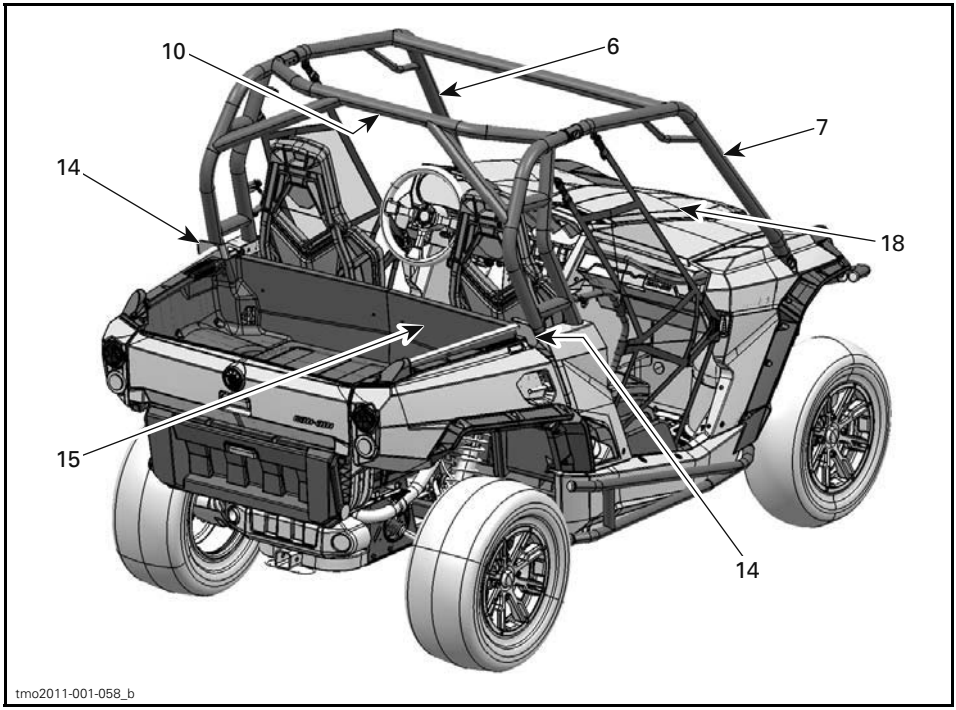

tmo2011-001-058_b

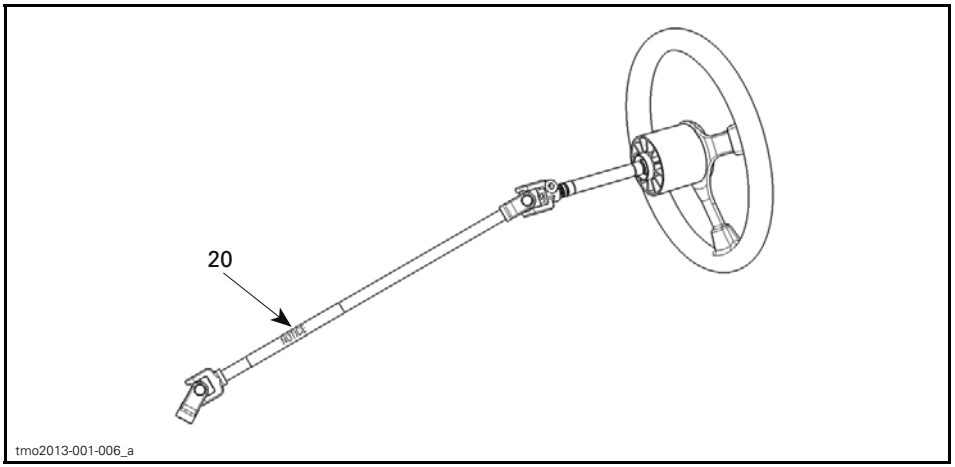

tmo2013-001-006_a

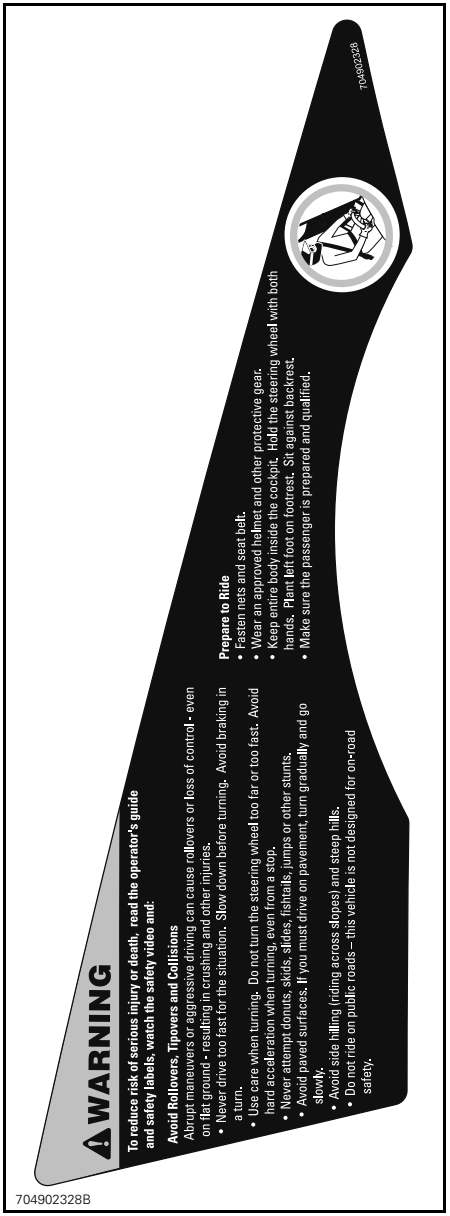

704902328B

LABEL 1

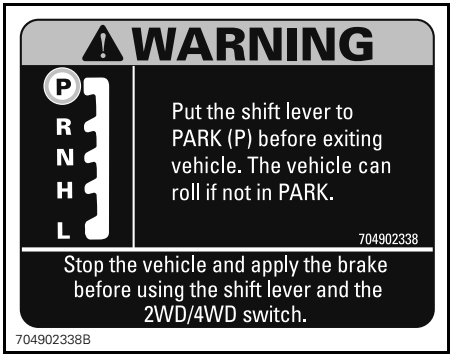

704902338B

LABEL 2

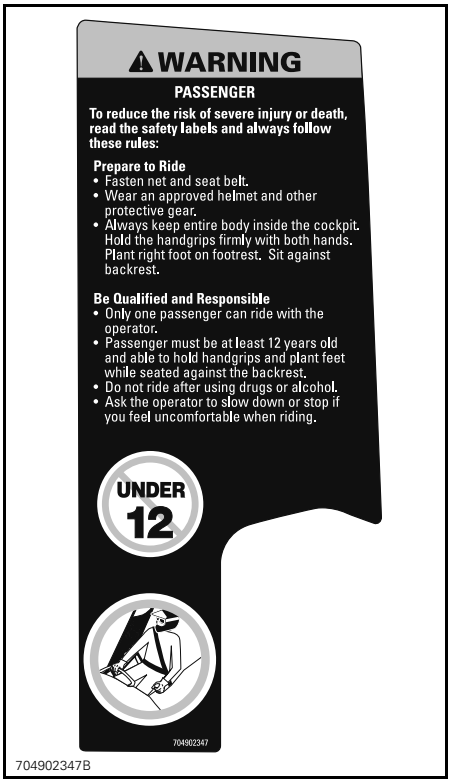

704902347B

LABEL 3

LABEL 4

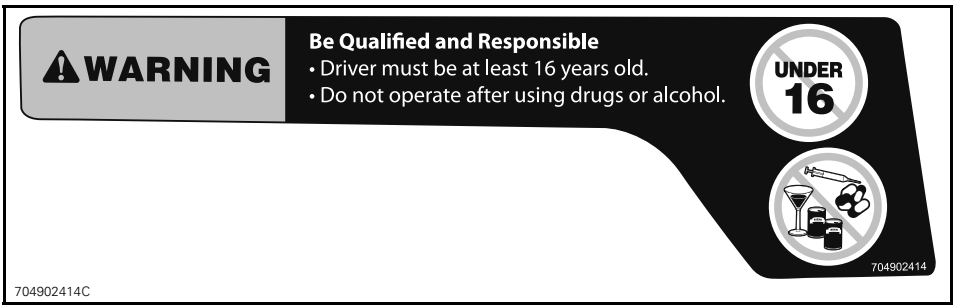

LABEL 5

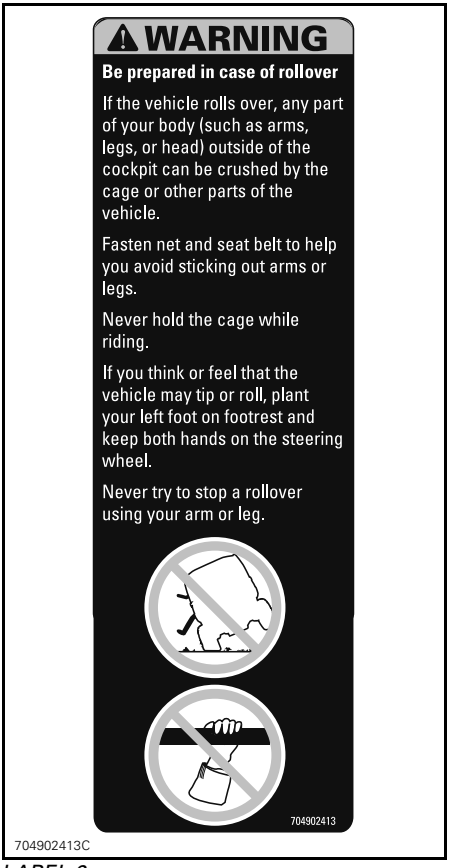

LABEL 6

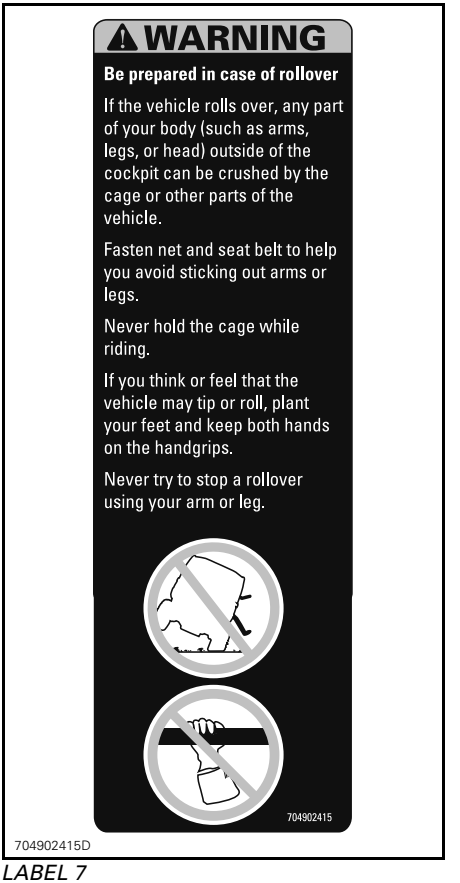

LABEL 7

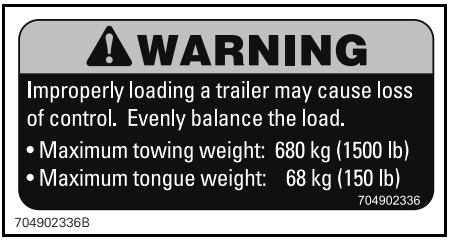

LABEL 8

LABEL 9

LABEL 10

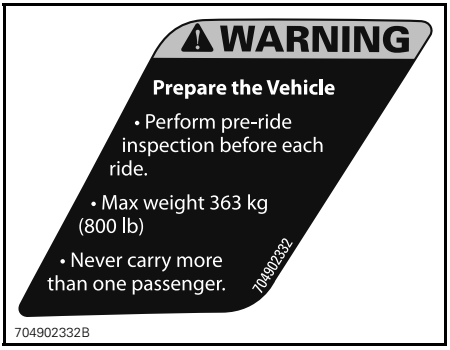

LABEL 11

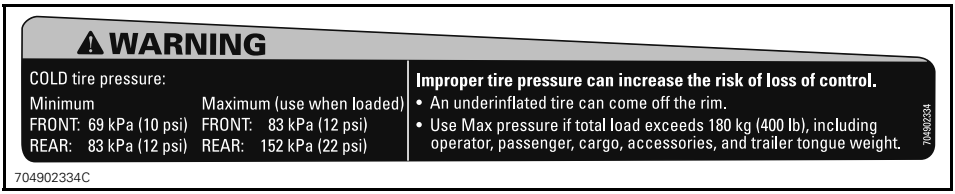

LABEL 12

LABEL 13

LABEL 14

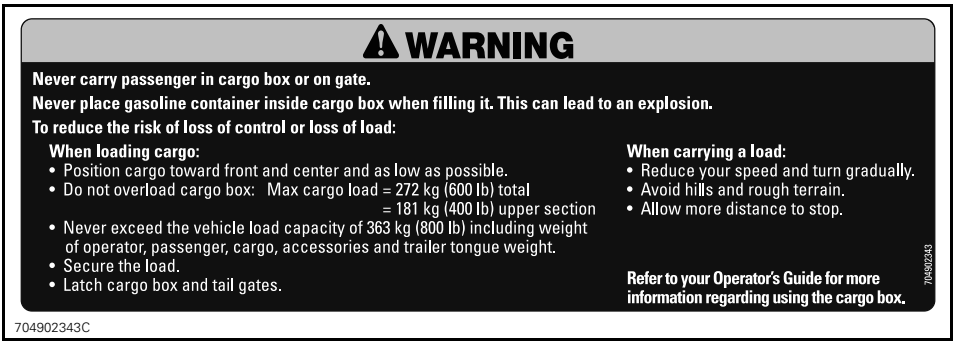

LABEL 15

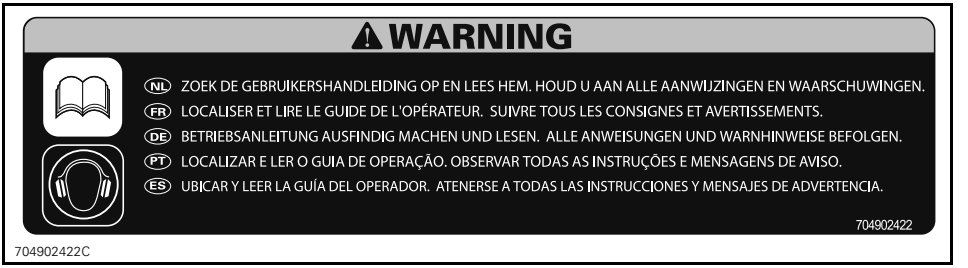

LABEL 16 - OUTSIDE CAN - US

LABEL 17

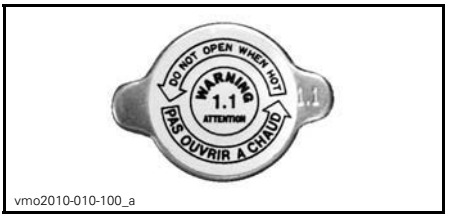

LABEL 18

LABEL 19 - ATTACHED TO COMPRESSOR HOSE

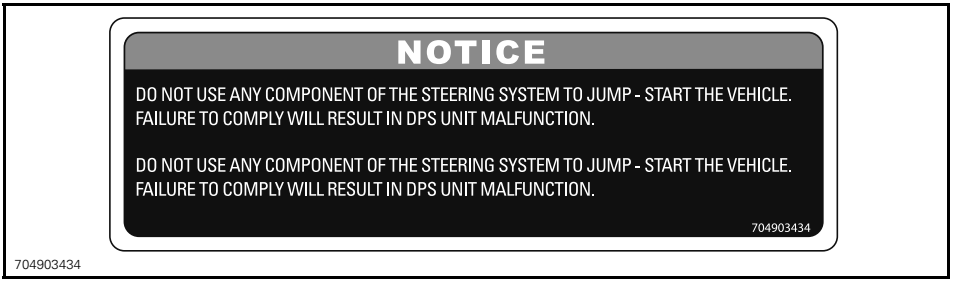

LABEL 20

Compliance Labels

These labels indicate vehicle's compliance.

tmo2011-001-517_a

1. Compliance labels located under glove box

704902367

704902873

VEHICLE INFORMATION

PRIMARY CONTROLS

It is important to know the location and operation of all controls, and to develop and practice smooth and coordinated use of them.

tmo2011-001-509_a

TYPICAL - PRIMARY CONTROLS

1) Steering Wheel

The steering wheel is located in front of the driver's seat.

The steering wheel steers the vehicle to the left or right.

Steer the steering wheel in the direction you want to go.

1. Steering wheel

Grip the steering wheel with both hands, without having thumbs rolled around the steering wheel.

⚠ CAUTION Under rough trail conditions or when crossing an obstacle, the steering wheel could suddenly jerk on one side, causing hand or wrist injuries if the thumbs are rolled around the steering wheel.

Models with DPS

Those models are equipped with Dynamic Power Steering (DPS) system. The DPS reduces the effort to turn the steering wheel.

2) Accelerator Pedal

The accelerator pedal is located on the right side of the brake pedal.

The accelerator pedal controls the engine speed.

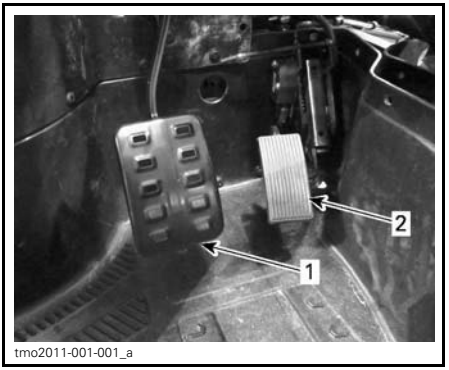

1. Brake pedal
2. Accelerator pedal

To increase or maintain vehicle speed, press on the accelerator pedal with your right foot.

To decrease vehicle speed, release the accelerator pedal.

The accelerator pedal is spring loaded and should return to rest position (idle) when not pressed.

NOTE: The accelerator pedal should never be disassembled.

3) Brake Pedal

The brake pedal is located on the left side of the accelerator pedal.

The brake pedal function is to slow down or stop the vehicle.

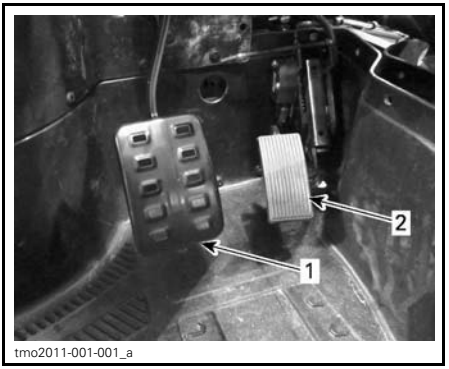

1. Brake pedal
2. Accelerator pedal

To decrease vehicle speed or to stop vehicle, press down the brake pedal with your right foot.

The brake pedal is spring loaded and should return to rest position when not pressed.

4) Shift Lever

The shift lever is located on the lower console.

The shift lever is used to change the gearbox position.

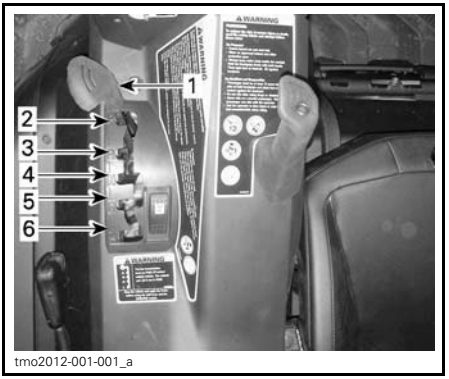

1. *Shift lever*
2. *Park*
3. *Reverse*
4. *Neutral*
5. *High range (forward)*
6. *Low range (forward)*

The vehicle must be stopped and brakes applied prior to selecting any gear.

NOTICE This gearbox is not designed to shift while vehicle is moving.

Park

The park position locks the gearbox to help prevent vehicle movement.

⚠ WARNING

Always use the PARK (P) position when the vehicle is not in operation. The vehicle can roll if the shift lever is not set to P (PARK).

Reverse

The reverse position allows the vehicle to go backwards.

NOTE: In reverse operation, the engine's RPM is limited, thus limiting the vehicle reverse speed.

⚠ WARNING

When driving downhill in reverse, gravity can increase the vehicle speed above the set limited reverse speed.

Neutral

The neutral position disengages the gearbox.

High Range (Forward)

This position selects the high speed range of the gearbox. It is the normal driving speed range. It allows the vehicle to reach its maximum speed.

Low Range (Forward)

This position selects the low speed range of the gearbox. It allows the vehicle to move slowly with maximum torque at the wheels.

NOTICE Use the low speed range to pull a trailer, carry heavy cargo, go over obstacles or drive uphill and downhill.

SECONDARY CONTROLS

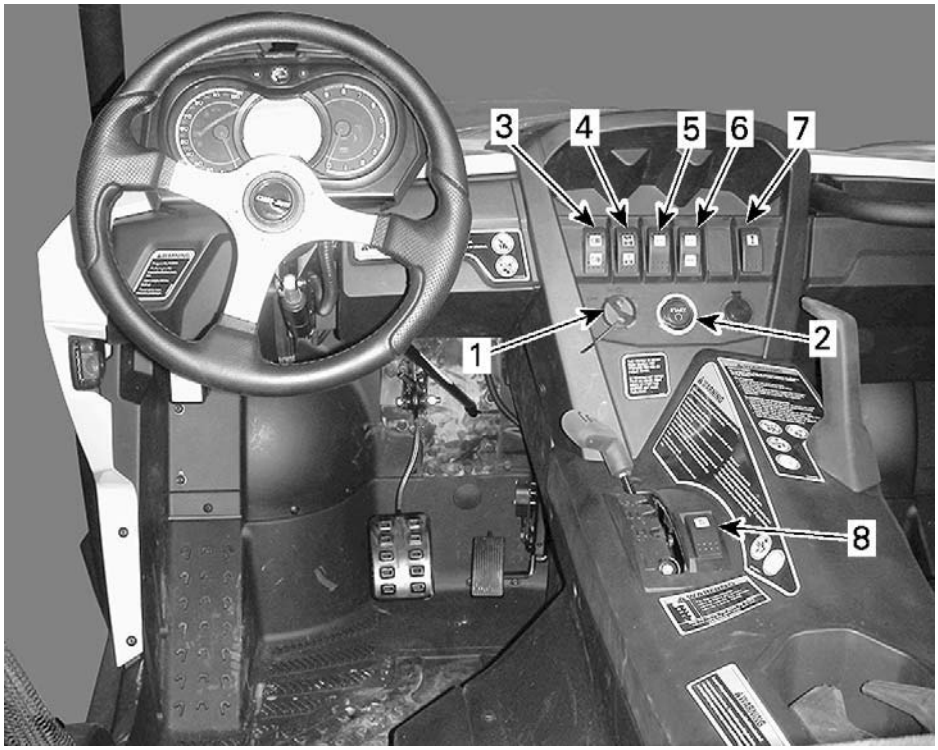

tmo2011-001-508_b

TYPICAL - SECONDARY CONTROLS

1) Ignition Switch and Keys

Ignition Switch

The ignition switch is located on the upper console area.

1. Ignition switch

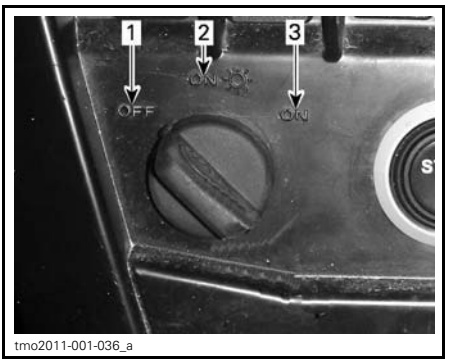

IGNITION SWITCH POSITION
1. *OFF*
2. *ON with lights*
3. *ON*

OFF

The key can be inserted or removed in this position only.

In OFF position, the electrical system of the vehicle is disabled.

The engine is shut down by turning the ignition switch to OFF position.

ON with Lights

When the key is turned in this position, the electrical system of the vehicle is activated.

The gauge should wake-up.

The vehicle lights are turned on.

The engine can be started.

ON

This position offers the same functions as ON with lights position, except the vehicle lights are turned off.

Ignition Keys

Digitally Encoded Security System (D.E.S.S.)

The ignition keys contain an electronic circuit that gives it a unique electronic serial number.

The D.E.S.S. system reads the key code and allows engine starting for keys it recognizes.

Types of Keys

This vehicle can be operated using 3 different types of ignition keys:

– Normal key (grey)
– Performance key (black)
– Optional Work key (orange).

The key type is differentiated by its color.

⚠ WARNING

Rollovers, tipovers, collisions and loss of control resulting in serious injury or death are possible with the performance, normal or optional work keys. Using the work key or normal key is not a substitute for the operator being prepared, qualified, and operating with care.

Normal Key

The vehicle is delivered with a normal key.

The normal key limits the overall performance to 70% of maximum engine torque and vehicle speed to 70 km/h (43 MPH).

⚠ WARNING

On steep downhills, the engine speed limiter may not prevent the vehicle from accelerating beyond this speed.

This key may be useful for riders who prefer more gradual acceleration, or for riding in environments where full speed and high acceleration are not desirable. For example, in narrow, winding trails, operators may prefer the normal key.

Performance Key

The vehicle is delivered with a performance key, which allows the user to access the full torque of the engine as well as the top speed of the vehicle.

This may be useful for riders who prefer crisper throttle response, and for environments where higher speeds and greater acceleration are appropriate. For example, in wide-open, straight trails, operators may prefer the performance key.

Optional Work Key

A work key is also available at your dealership.

The work key limits the overall performance to 50% of maximum engine torque and vehicle speed to 40 km/h (25 MPH).

⚠ WARNING

On steep downhills, the engine speed limiter may not prevent the vehicle from accelerating beyond this speed.

This may be useful for riders who use this vehicle in a workplace environment where lower speeds and acceleration are a requirement.

2) Engine Start Button

The engine start button is located on the upper console. When pressed and held, it starts the engine.

NOTE: The ignition switch must be in the **ON or ON with lights position** to allow engine start.

NOTE: If the ignition switch is left ON for more than 15 minutes, engine will not start unless ignition switch is turned OFF, then ON again.

1. Engine start button

3) Low/High Beam Headlight Switch

The low/high beam headlight switch is located on the upper console.

1. Low/High beam headlight switch

This switch is used to select either the headlights low or high beams.

4) 2WD/4WD Switch

The 2WD/4WD switch is located on the upper console.

1. 2WD/4WD switch

This switch selects 2 wheel drive or 4 wheel drive mode when the vehicle is stopped and the engine is running.

NOTICE **The vehicle must be stopped to engage or disengage 2WD/4WD switch. Mechanical damage may occur if switch is engaged or disengaged while driving.**

The 4WD mode is engaged when the switch is pushed upwards.

The 2WD mode is engaged when the switch is pushed downwards. The vehicle is then rear wheel drive only.

5) Sport Switch

The sport switch is located on the upper console.

1. Sport switch

The sport setting provides a crisper throttle response.

NOTE: The sport setting can be activated with all key types and provides the maximum power with the utilized key.

6) ACS Switch

LTD Models

The ACS switch is located on the upper console.

1. ACS button

The ACS switch function is to adjust the ACS suspension.

To adjust the ACS suspension setting, refer to *SUSPENSION* subsection.

7) Winch Switch

The winch can be controlled from inside the vehicle with the winch control switch located in the upper console.

1. Winch switch

The winch also comes with a remote control located in the glove box.

1. Remote control

Refer to your *BASIC GUIDE TO WINCHING TECHNIQUES* included with your vehicle for proper winch operation.

8) Override Switch

The override switch is located on the lower console beside the shift lever.

1. Override switch

The override switch main function is to bypass the engine speed limiter in reverse operation by allowing maximum engine torque.

⚠ WARNING

Only use the override to help get the vehicle unstuck from mud or other soft terrain. Do not use the override for normal operation in reverse. This would allow driving in reverse at excessive speeds and can increase the risk of losing control.

To engage the override function, proceed as follows:

While the shift lever is set to REVERSE position.

1. Ensure that the vehicle is stopped.
2. Press and hold the override switch then press the accelerator pedal gradually.

NOTE: When using the override function, the gauge will scroll an OVERRIDE message to confirm that the function is activated.

3. To disengage the override function, simply release the override switch.

The override switch is also used for two more functions:

– To reset the MAINTENANCE SOON message (refer to *MULTIFUNCTION GAUGE (LCD)* or *MULTIFUNCTION GAUGE (ANALOG/DIGITAL)* subsections).
– To move vehicle in case of a pedal accelerator failure (refer to *TROUBLESHOOTING GUIDELINES* subsection).

MULTIFUNCTION GAUGE (LCD)

The multifunction gauge (LCD) is located on the steering column.

⚠ WARNING

Do not adjust the display while riding . You could lose control.

Multifunction Gauge Description

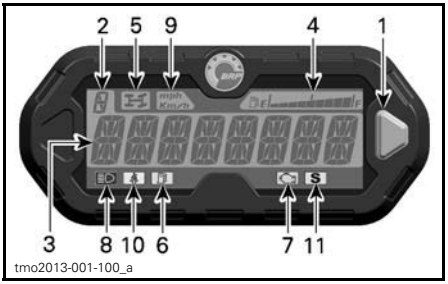

1. *Selector button*
2. *Transmission position display*
3. *Main screen*
4. *Fuel level display*
5. *4WD indicator lamp*
6. *Low fuel level indicator lamp*
7. *Check engine indicator lamp*
8. *High beam indicator lamp*
9. *MPH and KM/H indicator lamp*
10. *Seat belt indicator lamp*
11. *Sport mode indicator lamp*

1) Selector Button

The selector button is used to navigate or change settings in the multifunction gauge.

2) Transmission Position Display

This display will show transmission position.

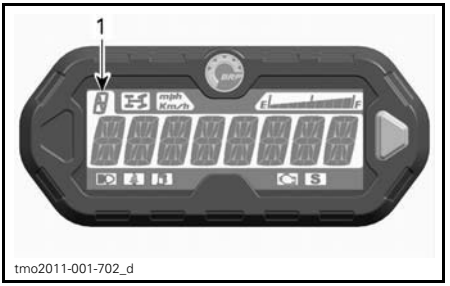

1. *Transmission position*

DISPLAY	FUNCTION
P	Park
R	Reverse
N	Neutral
H	High range
L	Low range

3) Main Screen

The main screen is used to display numerous functions of the multifunction gauge.

Refer to *MULTIFUNCTION GAUGE MODES* for the different available modes:

4) Fuel Level Display

Bar gauge continuously indicates the level of fuel in the fuel tank while riding.

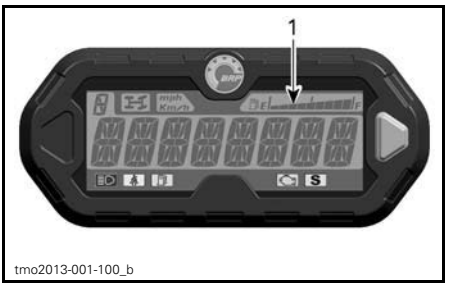

1. *Fuel level display*

5) 4WD Indicator Lamp

When this indicator is ON, it indicates the 4WD system is activated.

6) Low Fuel Level Indicator Lamp

When this indicator is ON, it indicates that there is approximately 12 L (3.2 U.S. gal.) of fuel left in fuel tank.

7) Check Engine Indicator Lamp

When this indicator is ON, it indicates an engine fault code, look for a message at the LCD display.

When this indicator blinks, it indicates that the LIMP HOME mode is activated.

Refer to *TROUBLESHOOTING* section for more details.

8) High Beam Indicator Lamp

When this indicator is ON, it indicates that high beam is selected on the headlights and that ignition key is in ON with lights position.

9) KM/H or MPH Indicator Lamp

mph
Km/h

The proper lamp turns on to indicate the unit the speedometer uses.

10) Seat Belt Indicator Lamp

When this indicator is ON, the driver's seat belt is not buckled.

11) Sport Mode Indicator Lamp

S

When this indicator is ON, the sport mode is active.

Multifunction Gauge Modes

Speed Mode

In this mode, the main screen shows the speed of the vehicle either in km/h or in MPH.

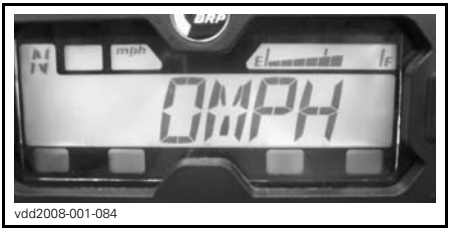

vdd2008-001-084

RPM Mode

In this mode, the main screen shows the engine RPM.

vdd2008-001-089

Combined Mode

In this mode, the main screen shows the speed of the vehicle and the engine RPM.

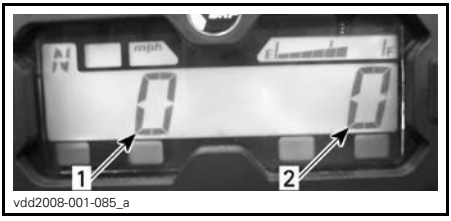

vdd2008-001-085_a

1. *Vehicle speed*
2. *Engine RPM*

Odometer (OD)

Odometer records the total distance travelled either in miles or kilometers.

vsi2009-018-030

Clock

Shows current time.

vmo2011-008-001

Refer to *GAUGE SETUP* to set current time.

Trip Meter (TP)

The trip meter records the travelled distance since it has been reset. Distance travelled is displayed either in kilometers or miles.

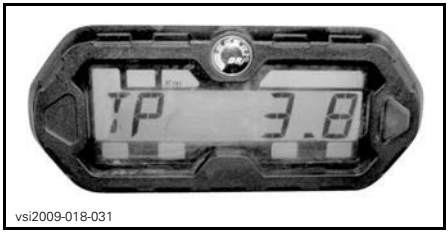
vsi2009-018-031

It can be used to establish a fuel tank range or distance between 2 way points.

Press and HOLD the selector button for 2 seconds to reset the trip meter.

Trip Hour Meter (TH)

The trip hour meter records vehicle running time when the electrical system is activated. It can be used to establish traveling time between 2 way points .

vsi2009-018-032

Press and HOLD the selector button for 2 seconds to reset the hour meter.

Engine Hour Meter (EH)

The engine hour meter records engine running time.

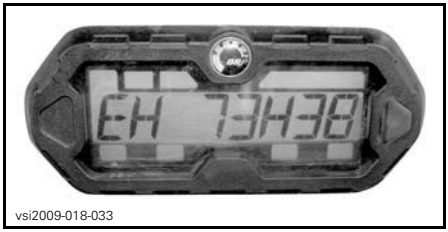
vsi2009-018-033

Message Display Mode

Important messages can be displayed in the main screen. Refer to table below.

If an abnormal engine condition occurs, a message may scroll across the main screen in conjunction with a pilot lamp. Refer to *TROUBLESHOOTING* section for details.

MESSAGE (NORMAL OPERATION)	DESCRIPTION
BRAKE	Message displayed when the brakes are applied continuously for 15 seconds.
PERFORMANCE KEY	Displayed at power up when a the performance key is used.
WORK KEY	Displayed at power up when the work key is used.
OVERRIDE	Override is displayed when the override switch is pressed and the shift lever is set to reverse gear.
SEAT BELT	When the seat belt is not buckled and the vehicle speed is less than 10 km/h (6 MPH), the message is displayed and the pilot lamp will be lit. No engine torque limitation engaged.
ENGINE LIMITATION ENGAGED FASTEN SEAT BELT	When the seat belt is not buckled and the vehicle speed is above 10 km/h (6 MPH), the message is displayed and the pilot lamp stays on. The engine management will engage a torque limitation that will limit the vehicle speed to approximately 20 km/h (12 MPH).
SPORT MODE ACTIVE	Displayed when the sport button is pressed.
MAINTENANCE SOON (1)	Displayed in gauge when vehicle is due for a maintenance.

(1) To erase the MAINTENANCE SOON message, proceed as follows:

1. Select PARK.
2. Turn ignition switch to ON. Do NOT start engine.

NOTE: The steps 3 through 9 must be completed within **5 seconds**.

3. Press override button and HOLD.
4. Press and release brake pedal.
5. Release override button.
6. Press and release brake pedal.
7. Press override button and HOLD.
8. Press and release brake pedal.
9. Release override button.
10. Turn ignition switch to OFF

NOTE: Do not turn ignition switch to ON before the multifunction gauge turns off.

Fault Code Mode

Press and hold mode button while switching high and low beam (three cycles) to access diagnostic fault codes.

Navigating in the LCD Gauge

Default Display Mode

After vehicle startup, the default display mode is either:

– Vehicle speed
– Engine revolutions per minute (RPM)
– Both parameters simultaneously (combined mode).

To change from one display to the other, proceed as follows.

1. Turn ignition key to ON to power-up the system up.
2. Wait until the "greeting message" has been displayed.
3. Press and release selector button once to display OD (odometer).
4. Press the selector button again, this time for 2 seconds.

This will change the Mode to either Speed, RPM or Combined.

vdd2008-001-083

5. To select another mode, repeat steps 3 and 4 until the desired mode is displayed.

Temporary Display Mode

In the temporary display mode, the following functions are available:

– Odometer
– Clock
– Trip meter (resettable)
– Trip Hour meter (resettable)
– Engine hour meter.

Press and release selector button to change the default display mode to the temporary mode.

tmo2011-001-702_c

1. Selector button

The gauge will display the selected mode for 10 seconds then will return to the normal display mode.

While in a resettable mode, push and HOLD selector button for 2 seconds to reset it.

Gauge Setup

Clock Setting

Once clock display as been selected, use the display selector button to set clock as follows:

vmo2011-008-001_a

1. Selector button
2. Time

1. Press and HOLD button (Display will flash).

2. Choose the 12-hour (12H) or 24-hour (24H) format by pressing button.
3. If the 12-hour format was selected, choose Am ("A") or Pm ("P") by pressing button.
4. Press and HOLD button.
5. Choose hour first digit by pressing button.
6. Press and HOLD button.
7. Choose hour second digit by pressing button.
8. Press and HOLD button.
9. Choose minutes first digit by pressing button.
10. Press and HOLD button.
11. Choose minutes second digit by pressing button.
12. Press button to enter settings (CLOCK will appear on display).

NOTE: The gauge will display the current time for 10 seconds then will return to the normal display mode.

Unit Selection (km/h vs MPH)

The speedometer, odometer and trip meter are factory preset in **miles** but it is possible to change them to **kilometer** reading. Contact an authorized Can-Am dealer.

Language Selection

The gauge display language can be changed. Refer to an authorized Can-Am dealer for language availability and setup the gauge to your preference.

MULTIFUNCTION GAUGE (ANALOG/DIGITAL)

Multifunction Gauge Description

The multifunction gauge (analog/digital) is located on the steering column.

The multifunction gauge (analog/digital) is comprised of a digital gauge and two analog gauges (speedometer and tachometer).

The engine temperature and fuel level bar graphs are comprised in the digital gauge.

The indicators lamps are comprised in both analog gauges.

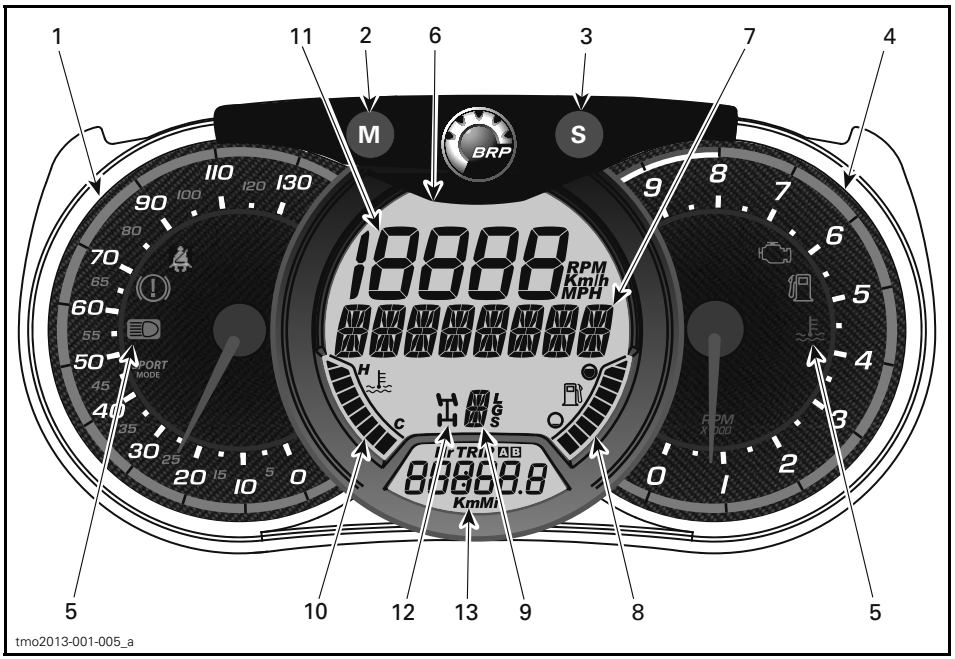

⚠ WARNING

Do not adjust the display while riding. You could lose control.

1) Analog Speedometer

Measures vehicle speed in km/h or mph.

2) MODE (M) Button

Pressing the MODE (M) button will scroll through the functions of the main digital display.

FUNCTION SEQUENCE	OPTIONS
Air Suspension (LTD model only)	Press ACS button to change setting (1 to 6)
Numerical Display is flashing	Press SET (S) to scroll and select desired function and press MODE (M) to confirm
Multifunction display is flashing	Press SET (S) to scroll and select desired function and press MODE (M) to confirm

3) SET (S) Button

Pressing the SET (S) button will scroll through the functions of the secondary digital display.

FUNCTION SEQUENCE	INFORMATION DISPLAYED
Clock	XX:XX (24:00 time base) XX:XX A or P (12:00 AM/PM time base)
Cumulative distance odometer	XXXXX.X km or mi
Trip distance — odometer A (TRIP A)	XXXXX.X km or mi
Trip distance — odometer B (TRIP B)	XXXXX.X km or mi
Engine time chronometer (Hr)	XXXXX.X
Trip time chronometer (HrTRIP)	XXXXX.X

To reset any trip functions, push and hold the SET (S) button for three seconds.

4) Analog Tachometer (RPM)

Measures engine revolutions per minute (RPM). Multiply by 1000 to obtain actual revolutions.

5) Indicator Lamps

Indicator lamps will inform you of various conditions or problems.

An indicator lamp can flash alone or in combination with another lamp.

INDICATOR LAMP(S)		DESCRIPTION
All indicator lamps	On	All indicator lamps are activated when ignition switch is ON and the engine is not started
	On	Low fuel
	On	Check engine
	On	High engine temperature
	On	Headlights in the HIGH beam position
	Flash	Operator seat belt is not properly latched. Engine output will be limited, reducing the speed and operability of the vehicle. Main digital display: FASTEN SEAT BELT.
	On	Sport mode engaged.

6) Main Digital Display

Displays useful real-time information to the rider.

7) Multifunction Display

The vehicle speed or the engine revolutions (RPM) can be displayed. See *MODE (M) BUTTON* in this section.

Important messages can also be displayed. Refer to table below.

If an abnormal engine condition occurs, a message can be combined with a pilot lamp. Refer to *TROUBLESHOOTING* section for details.

MESSAGE	DESCRIPTION
BRAKE	Message displayed when the brakes are applied continuously for 15 seconds.
PERFORMANCE KEY	Displayed at power up when a the performance key is used.
WORK KEY	Displayed at power up when the work key is used.
OVERRIDE	Override is displayed when the override switch is pressed and the shift lever is set to reverse gear.
SEAT BELT	When the seat belt is not buckled and the vehicle speed is less than 10 km/h (6 MPH), the message is displayed and the pilot lamp will be lit. No engine torque limitation engaged.
ENGINE LIMITATION ENGAGED FASTEN SEAT BELT	When the seat belt is not buckled and the vehicle speed is above 10 km/h (6 MPH), the message is displayed and the pilot lamp stays on. The engine management will engage a torque limitation that will limit the vehicle speed to approximately 20 km/h (12 MPH).
SPORT MODE ACTIVE	Displayed when the sport button is pressed.
MAINTENANCE SOON(1)	Displayed in gauge when vehicle is due for a maintenance.

(1) To erase the MAINTENANCE SOON message, proceed as follows:

1. Select PARK.
2. Turn ignition switch to ON. Do NOT start engine.

NOTE: The steps 3 through 9 must be completed within **5 seconds**.

3. Press override button and HOLD.
4. Press and release brake pedal.
5. Release override button.
6. Press and release brake pedal.
7. Press override button and HOLD.
8. Press and release brake pedal.
9. Release override button.
10. Turn ignition switch to OFF

NOTE: Do not turn ignition switch to ON before the multifunction gauge turns off.

8) Fuel Level Indicator

Bar graph that continuously indicates the level of fuel left in the fuel tank.

As a second function, the bar graph will indicate the ACS setting when the ACS is in manual mode.

9) Gearbox Position Indicator

Displays the selected gearbox position.

As a second function, will indicate the current ACS position setting in automatic and manual modes.

10) Engine Temperature Indicator

Bar graph that continuously indicates the engine coolant temperature.

As a second function, the bar graph will indicate the ACS setting when the ACS is in manual mode.

11) Numerical Display

The vehicle speed or the engine revolutions (RPM) can be displayed. See *MODE (M) BUTTON* in this section.

12) 2WD/4WD Indicator

When this indicator is ON, the 4WD system is activated.

13) Secondary Digital Display

Displays useful real time information to the rider. For display function informations, refer to *SET (S) BUTTON*.

Gauge Setup

Setting Metric/Imperial Units

See a Can-Am dealer for adjustments.

Setting Clock

1. Press MODE (M) button to select clock display.
2. Push and hold MODE (M) button for three seconds.
3. Press MODE (M) button to select 12:00 AM PM or 24:00 time base.
4. If 12:00 AM PM time base is selected, A or P flashes. Press MODE (M) button to select A (AM) or P (PM).
5. Press SET (S) button to change hours.
6. Press MODE (M) button to switch to minutes (minutes flash).
7. Press SET (S) button to change minutes.
8. Press MODE (M) button.

Setting Language

The gauge display language can be changed. Refer to an authorized Can-Am dealer for language availability and setup the gauge to your preference.

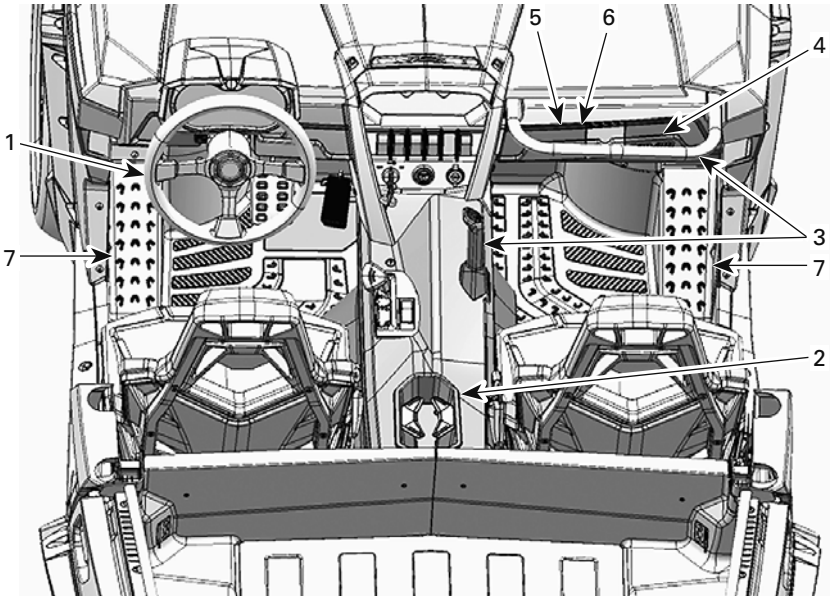

tmo2011-001-056_a

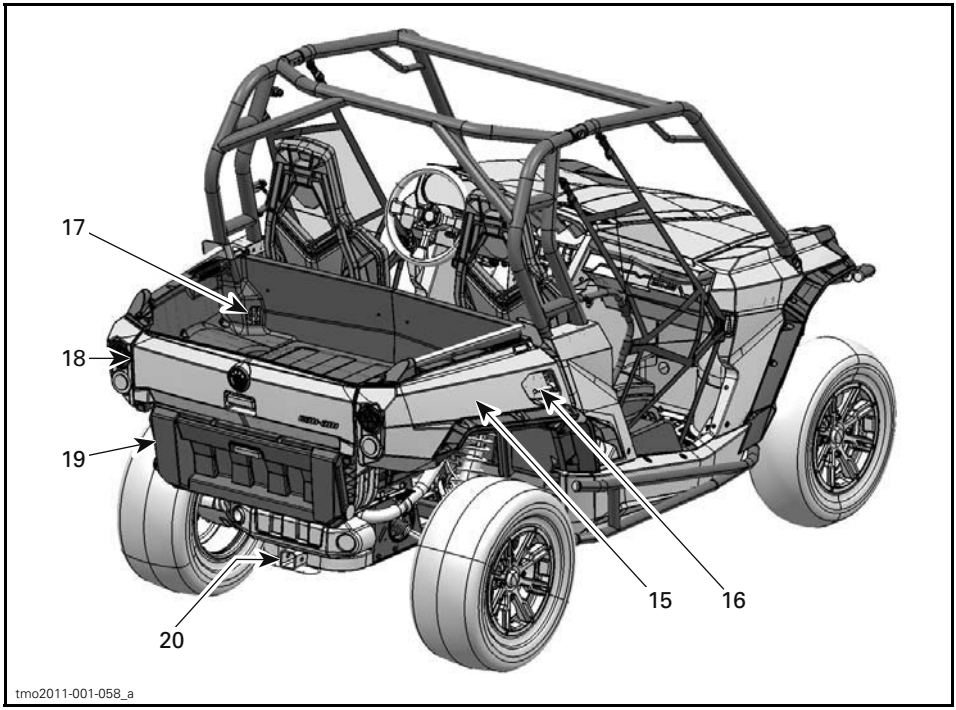
17
18
19
20
15
16
tmo2011-001-058_a

1) Tilt Steering

The steering wheel height is adjustable.

Adjust the steering wheel height to face your chest, not your head.

To adjust steering wheel height:

1. Unlock steering by pulling the tilt lever toward you.
2. Move steering wheel to the desired position.
3. Release tilt lever to lock steering wheel in position.

1. Tilt lever

⚠ WARNING

Never adjust the steering wheel height while riding. You may lose control.

2) Cup Holders

Two cup holders are located at the rear of the lower console.

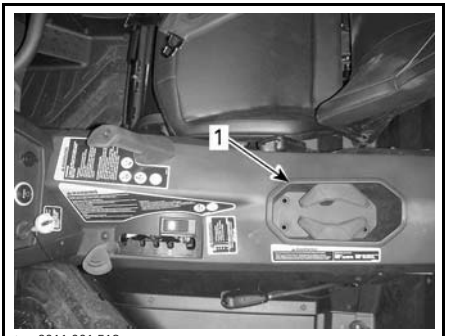

1. Cup holders

NOTE: Do not use cup holders while riding in rough conditions.

3) Passenger Handholds

The passenger has access to a front handhold located in front of seat above glove box.

A left hand handhold located in the center of the vehicle on the lower console is also accessible.

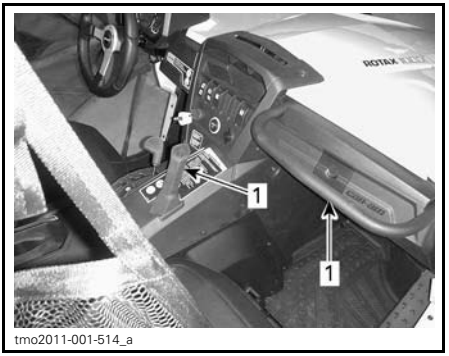

1. Passenger handholds

Holding the handholds helps the passenger brace against the movement of the vehicle and helps keep hands and body inside the cockpit in the event of a rollover.

⚠ WARNING

Never use any part of vehicle cage as handholds. Hands can be struck by objects outside the cockpit or crushed in a rollover.

4) Glove Box

The vehicle is equipped with a closed glove box made to carry light objects.

1. Glove box latch

GLOVE BOX CAPACITY	
MAXIMUM LOAD	5 kg (11 lb)

5) Tool Kit

A tool kit with basic tools is provided. It is located in the glove box.

6) Winch Remote Control

A remote control is provided to operate the winch. It is located in the glove box.

To use the remote control, connect the remote control to the 12 V outlet in the glove box. Refer to your *BASIC GUIDE TO WINCHING TECHNIQUES* manual included with your vehicle for proper winch operation.

7) Footrests

The vehicle is equipped with driver and passenger footrests to allow firmly planting feet on vehicle floor, which helps to maintain proper body position while riding.

The footrests help minimize the risk of leg or foot injury.

Always wear appropriate footwear. See *RIDING GEAR* subsection.

8) Side Nets

A side net is provided on each side of the cockpit to help arms, legs or shoulders stay inside the vehicle, thus reducing the risk of injuries. Side Nets may also keep brushes or debris out of cockpit.

⚠ WARNING

Never operate the vehicle unless both side nets are in place and buckled.

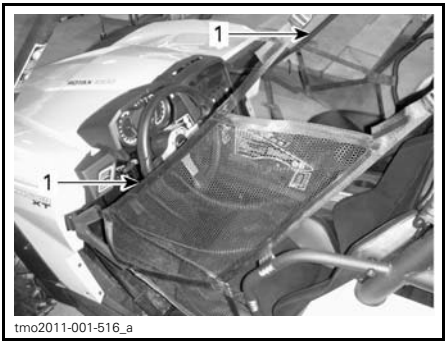

1. Side net

Side nets are adjustable and must be kept as tight as possible. To adjust side nets proceed as follows:

1. Secure side net with buckle.
2. Pull on both adjustment straps to tighten.

1. Adjustment straps

9) Shoulder Guards

The vehicle is equipped with shoulder guards to help restrain the entire body of driver and passenger inside vehicle.

10) Seat Belts

This vehicle is equipped with 3 points seat belts to help protect driver and passenger in the event of collisions, rollovers, or tipovers to help keep passengers in the cockpit.

⚠ WARNING

Wear seat belts properly at all times. Seat belts reduce the risk of injury in a crash and help keep limbs inside the cockpit in a rollover or any accidents.

If driver's seat belt is not fastened when:

– The ignition is turn ON, the seat belt indicator lamp will flash.
– The engine is started and shift lever is moved out of PARK, vehicle speed will be limited to a maximum of approximately 10 km/h (6 MPH) on flat ground.

⚠ WARNING

The vehicle may reach higher or lower speed depending on inclines.

To remind you to fasten the seat belt, the multifunction gauge will display the following message: ENGINE LIMITATION ENGAGED FASTEN SEAT BELT.

⚠ WARNING

There is no indicator light or message for the passenger seat belt. The driver is responsible of the passenger safety and should ensure the passenger buckles the seat belt.

Fastening and Adjusting the Seat Belt

Insert the seat belt latch plate into the buckle, then pull the belt to ensure it is properly locked.

Position the belt as low as possible across your hips. Then, pull the belt against your shoulder for a snug fit.

NOTE: Slide the latch as required to adjust the seat belt.

⚠ WARNING

Wear seat belt properly. Make sure it is not twisted or defective.

To release the seat belt, push on the buckle button.

11) Driver's Seat

The driver's seat offers fore and aft adjustments.

To adjust seat, move the seat lever to unlock the seat. Release the lever to lock the seat into desired position.

⚠ WARNING

Never adjust the seat position while driving.

The driver's seat can be removed easily:

– Tilt seat forward by releasing latch between seat cushion and backrest.
– Pull seat upwards.

All Models Except LTD

A convenient storage compartment is located under the driver's seat.

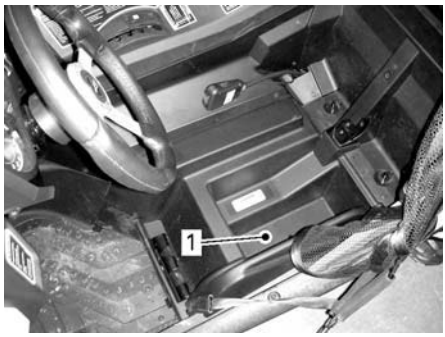

1. Storage compartment

LTD Models

The ACS compressor is located under the driver's seat.

ACS COMPRESSOR

12) Passenger Seat

The passenger seat is not adjustable.

The passenger seat can be tilted forward for removal by releasing the latch located between the seat and the backrest. Once tilted forward the seat can be removed by pulling upwards.

13) Fuel Reservoir Cap

The fuel reservoir cap is located on the right hand side of the vehicle behind the passenger seat.

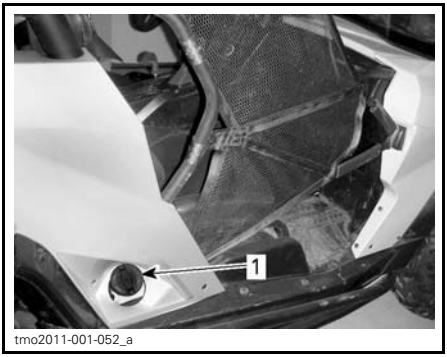

1. Fuel reservoir cap

Refer to *FUEL* subsection for information on fueling procedure and fuel requirements.

14) Winch

XT and LTD Models

The winch can be actuated inside the vehicle using the winch control switch on the upper console or with the included remote control.

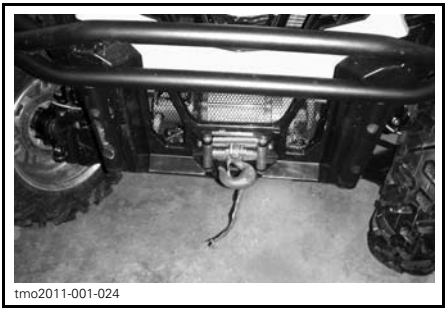

WINCH

Refer to your *BASIC GUIDE TO WINCHING TECHNIQUES* manual included with your vehicle for winch operation.

15) Cargo Box

The vehicle is equipped with a 2 level inclinable cargo box. The cargo box may be used for various types of cargo.

⚠ WARNING

To reduce the risk of loss of control or loss of load, use the cargo box only in accordance with *CARRYING LOADS* in the *SAFETY INFORMATION* section.

The cargo box is split into an upper and lower sections to provide more compartments for carrying separate loads.

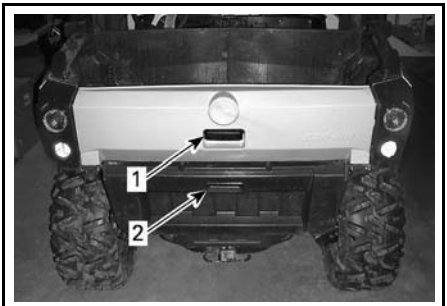

tmo2011-001-007_a

1. Cargo box upper section
2. Cargo box lower section

The floor separating both sections can be easily removed to make a single cargo area. Both the upper and lower tailgates must be opened to allow the floor separator to be removed.

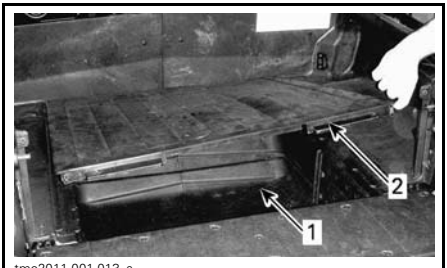

tmo2011-001-013_a

1. Increased cargo volume
2. Floor/Separator

tmo2011-001-014

CARGO AREA WITHOUT FLOOR/SEPARATOR

The lower section can be further split into two subsections by inserting a plywood piece into the vertical slots.

16) Cargo Box Tilt Release Handles

The latching mechanism of the cargo box can be actuated from either side of the vehicle through a release handle.

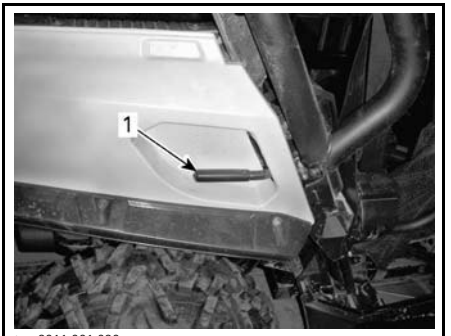

tmo2011-001-020_a

1. Cargo box release handle

Refer to *CARRYING LOADS* in the *SAFETY INFORMATION* section.

17) Anchoring Hooks

To provide anchoring point in order to secure cargo inside the cargo box, 4 anchoring hooks are located inside the cargo area.

18) Upper Tailgate

The upper section of the cargo box can be closed with a tailgate.

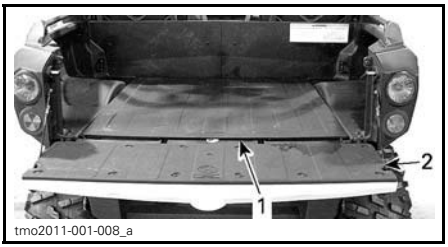

CARGO BOX UPPER SECTION
1. *Floor section separator*
2. *Upper tailgate*

NOTICE Do not exceed 100 kg (220 lb) of weight on the upper tailgate during loading or unloading. Always close the upper tailgate before operating to reduce the risk of loss of load.

Upper Tailgate Removal

The upper tailgate can easily be removed by inclining and pulling out of hinges, then removing the retaining cables.

1. *Upper tailgate hinge*

19) Lower Tailgate

The lower section of the cargo box has a lower tailgate.

LOWER SECTION WITH LOWER TAILGATE

The upper tailgate must be closed in order to open or close the lower tailgate.

1. *Lower tailgate*
2. *Lower section*

NOTICE Do not exceed 100 kg (220 lb) of weight on the lower tailgate during loading or unloading. Always close the lower tailgate before operating to reduce the risk of loss of load.

20) Hitch support

The vehicle comes equipped with a 51 mm x 51 mm (2 in x 2 in) box size standard hitch support.

For the proper usage of the hitch support, refer to *MOVING LOADS AND DOING WORK* in the *SAFETY INFORMATION* section.

⚠ WARNING

To reduce the risk of loss of control or loss of load, always respect the maximum hauling capacity.

21) ACS Compressor

LTD Models Only

The ACS compressor main function is to provide air pressure for the suspensions. Refer to *SUSPENSION* subsection for more details.

The ACS compressor may be also used as a convenient feature to inflate your Commander tires.

NOTE: The engine must be running to allow for the compressor to start.

NOTICE **Do not use the ACS compressor for more than 2 minutes to avoid overheating.**

To inflate tires, proceed as follows:

1. Ensure that the shift lever is set in PARK position.
2. Start engine and let it run at idle.
3. Remove seat.
4. Connect supplied hose located in the glove box into the compressor fitting.

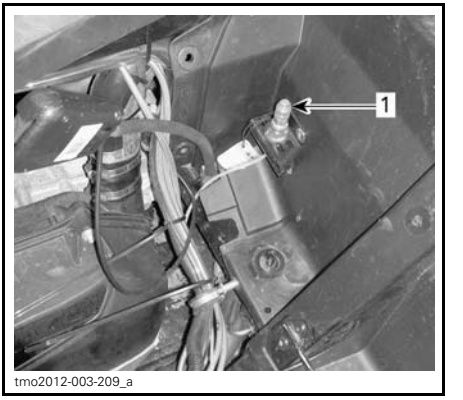

1. Compressor fitting

5. Inflate tire.

NOTE: For your convenience, a pressure gauge is supplied in tool kit.

⚠ WARNING

Always inflate tires to recommended air pressure.

22) Radio

LTD Models Only

The radio controls are located in the upper console.

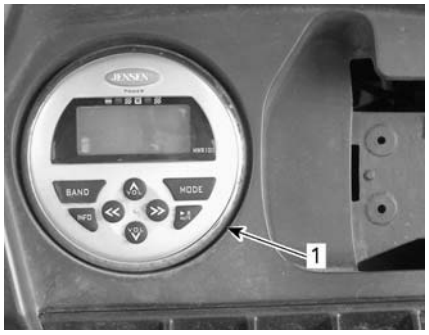

tmo2012-003-208_a

TYPICAL
1. Radio controls

⚠ WARNING

- Adjusting radio or reading radio display can distract from the operation of the vehicle, particularly from constantly scanning the environment.
- Before adjusting radio or reading radio display, ensure your environment is clear and free from obstacle, and bring the vehicle to a low speed.

Refer to radio owner manual for operating instruction.

23) Radio AUX Output

These sockets are used to connect portable audio devices.

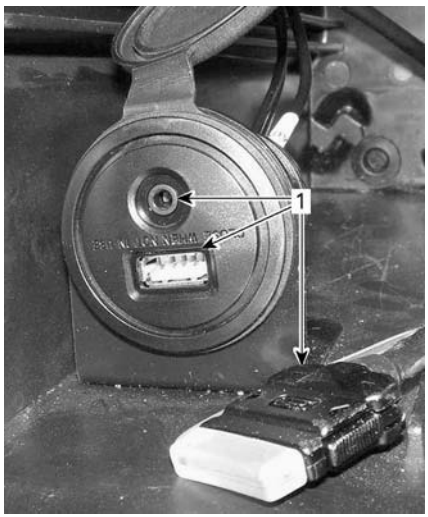

tmo2012-003-852_a

INSIDE GLOVE BOX
1. Portable audio device sockets

Refer to radio owner manual for operating instruction.

24) GPS Receiver (Global Positioning System)

LTD Models Only

The GPS receiver is located on the upper control console.

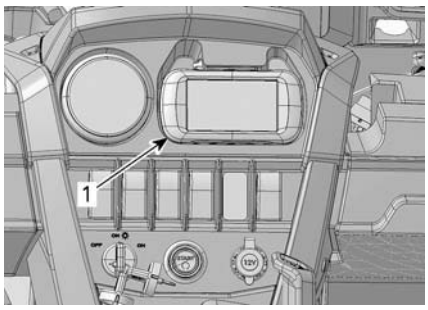

tmo2012-003-802_a

TYPICAL
1. GPS receiver

⚠ WARNING

– Reading the GPS receiver can distract from the operation of the vehicle, particularly from constantly scanning the environment.
– Before reading the GPS receiver, ensure your environment is clear and free from obstacle, and bring the vehicle to a low speed.

The GPS receiver is powered via the vehicle electrical system when installed on its support (with ignition switch to ON position), or via batteries when removed from its support.

GPS receiver can be activated using the ON/OFF button on the receiver or with the vehicle ignition switch when turned to ON or OFF position (when installed on the vehicle).

The following is provided with the GPS receiver:
– Lithium-ion battery pack
– USB cable
– AC charger
– Owner's manual on disk
– Quick start manual.

NOTE: Always refer to manufacturer's documentation supplied with the GPS receiver for proper use.

NOTE: For more details about the GPS receiver, available maps or accessories, contact an authorized Can-Am dealer or visit Garmin website at www.garmin.com.

⚠ WARNING

Remember, the data provided by the GPS receiver is for reference only. For your safety, NEVER rely solely on this information.

GPS Receiver Installation

Insert GPS receiver onto the lower tab of support.

Lock GPS receiver onto its support by pushing it towards locking tab.

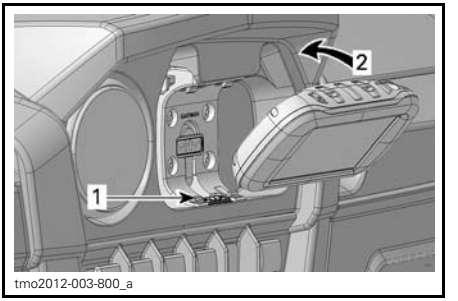

1. Lower tab
2. Push toward locking tab

NOTICE To prevent weather damage or theft to your GPS receiver, always remove it from its support when leaving the vehicle.

GPS Receiver Removal

Push on locking tab to release GPS.

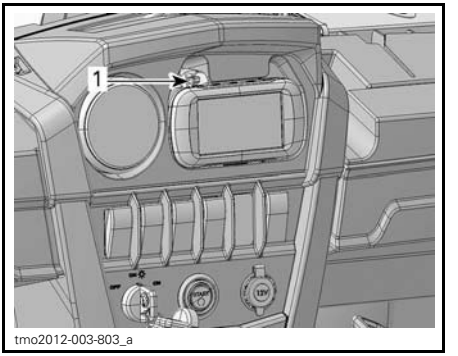

1. Locking tab

24) Rear Net

LTD Models Only

The vehicle comes equipped with a rear net.

Rear Net Removal

Undo straps securing rear net to cage.

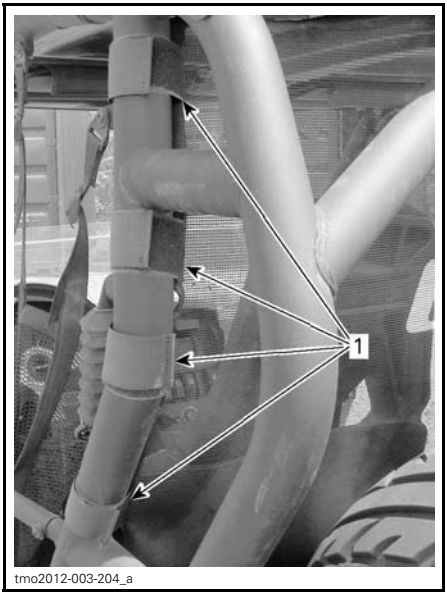

TYPICAL - LH SIDE
1. *Straps*

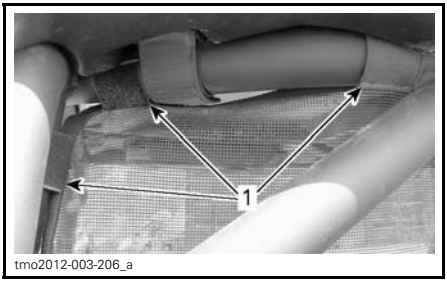

TYPICAL - LH SIDE
1. *Straps*

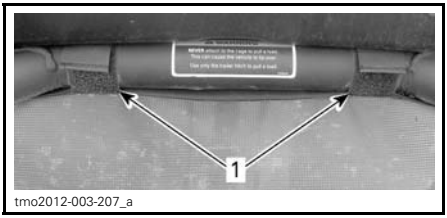

TYPICAL - CENTER
1. *Straps*

Remove rear net hooks from cage junction.

Remove and keep screw, washer and nut located on the lower section of net.

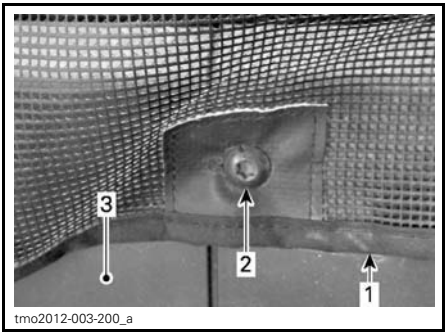

LH BULKHEAD
1. *Rear wind screen*
2. *Bulkhead retaining screw*
3. *LH rear bulkhead*

Remove rear net.

Reinstall screw, washer and nut located on the lower section of net.

Rear Net Installation

Installation is the reverse of the removal. However pay attention to the following.

Torque retaining nut to specification.

TORQUE	
Retaining nut	7.5 N•m ± 1.0 N•m (66 lbf•**in** ± 9 lbf•**in**)

25) Half Windshield

LTD Models Only

The vehicle comes equipped with a half windshield.

Half Windshield Removal

1. Undo the 4 straps securing half windshield to the cockpit tubular structure.

tsi2011-009-009

2. Remove and keep retaining nut, washer and screw securing windshield to bracket.

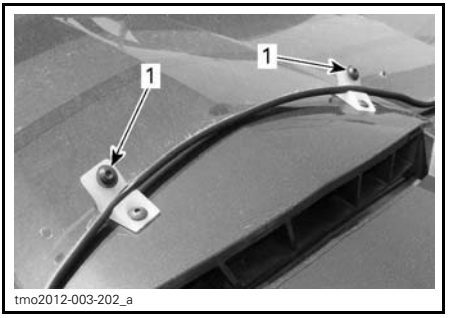

tmo2012-003-202_a

1. Retaining screw securing windshield to bracket

3. Remove windshield from vehicle.

NOTICE Make sure half windshield is resting on a clean non abrasive surface with the interior facing up.

Half Windshield Installation

Install windshield onto vehicle, making sure screw holes in the lower section of windshield align with bracket holes.

Fasten the 4 straps.

tsi2011-009-009

Install retaining screws in windshield and torque retaining screws to specification.

TORQUE	
Retaining screw	2.5 N•m ± .5 N•m (22 lbf•**in** ± 4 lbf•**in**)

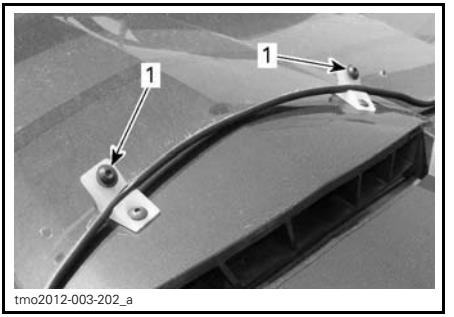

tmo2012-003-202_a

1. Brackets with retaining screws and washers installed

26) Full Roof

LTD Models Only

The vehicle comes equipped with a full roof.

Full Roof Removal

1. Remove top mid section.
   1.1 Undo rear straps securing top mid section to cage.

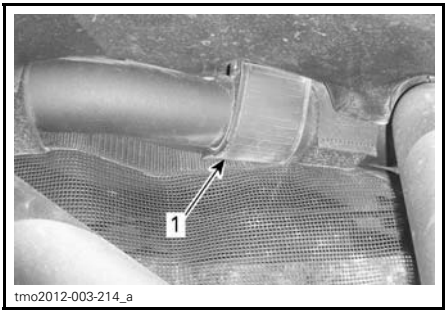

RH SIDE SHOWN
1. Rear strap

1.2 Undo lateral straps securing top mid section to cage.

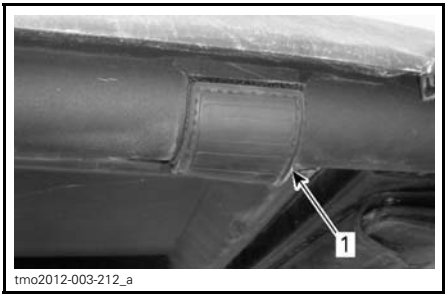

RH SIDE SHOWN
1. Lateral strap

1.3 Remove top mid section from vehicle.

2. Remove sport visor from vehicle.

2.1 Remove and keep screws securing front of sport visor clamps to cage.

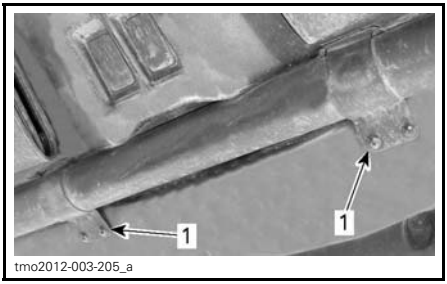

SPORT VISOR FRONT CLAMPS
1. Clamps secured with screws

2.2 Remove and keep screws securing sides of sport visor clamps to cage.

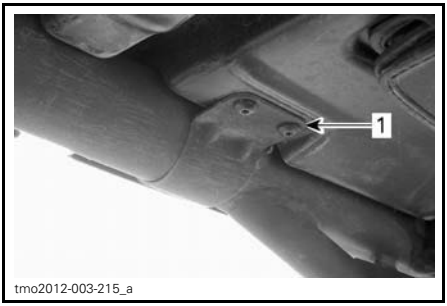

RH SIDE SHOWN
1. Lateral clamp secured with screws

2.3 Undo clamps and remove sport visor from vehicle.

NOTE: Top mid section needs to be removed before sport visor.

Full Roof Installation

Installation is the reverse of removal. However pay attention to the following.

TORQUE	
Roof clamps retaining screws	2.5 N•m ± .5 N•m (22 lbf•**in** ± 4 lbf•**in**)

SUSPENSION

Suspension Adjustment Guidelines

Your vehicle handling and comfort depend upon suspension adjustments.

⚠ WARNING

Suspension adjustment could affect vehicle handling. Always take time to familiarize yourself with the vehicle's behavior after any suspension adjustment has been made.

Choice of suspension adjustments vary with vehicle load, personal preference, riding speed and terrain condition.

The best way to set up the suspension, is to start from factory settings, then customize each adjustment one at a time.

Front and rear adjustments are interrelated. It may be necessary to readjust the rear shock absorbers after adjusting front shock absorbers for instance.

Test run the vehicle under the same conditions; trail, speed, load, etc. Change one adjustment and retest. Proceed methodically until you are satisfied.

Suspension Factory Settings

FRONT SUSPENSION FACTORY SETTINGS		
ADJUSTMENT	MODEL	FACTORY SETTING
Spring preload	Base DPS XT	Cam position 1 (soft)
	X	Spring length 310 mm (12.2 in)
	LTD	Not adjustable
Compression damping (low speed)	X	12 positions
	LTD	10 positions
Compression damping (high speed)	X	12 positions
Rebound damping	X	12 positions

REAR SUSPENSION FACTORY SETTINGS		
ADJUSTMENT	MODEL	FACTORY SETTING
Spring preload	Base DPS XT	Cam position 1 (soft)
	X	Spring length 362 mm (14.3 in)
	LTD	Not adjustable
Compression damping (low speed)	X	12 positions
	LTD	10 positions
Compression damping (high speed)	X	12 positions
Rebound damping	X	12 positions

Suspension Adjustments

Spring Preload Adjustment (All Models Except LTD)

Shorten the spring for a firmer ride and rough riding condition or when pulling a trailer.

Lengthen the spring for a softer ride and smooth riding condition.

⚠ WARNING

The left and right shock adjustment on front or rear suspension must always be set to the same position. Never adjust one shock only. Uneven adjustment can cause poor handling and loss of stability, which could lead to an accident.

Lift the vehicle. Spring length should be measured without load on the wheels.

Spring length should be equal on both sides.

Adjust by turning adjusting cam. Use tool from vehicle tool kit.

All Models Except X

Adjust by turning adjusting cam. Use tool from vehicle tool kit.

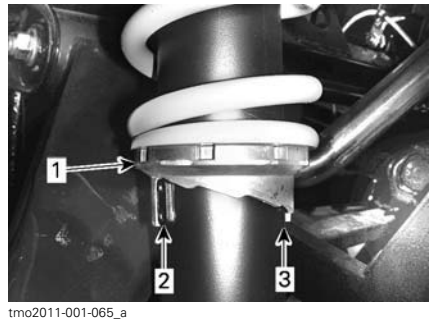

TYPICAL
1. *Turn adjusting cams*
2. *Smooth adjustment*
3. *Hard adjustment*

X Model

Adjust by loosening lock ring and turning adjuster ring accordingly. Use tool from vehicle tool kit.

TYPICAL - SPRING NOT SHOWN
1. *Loosen top lock ring*
2. *Turn adjuster ring accordingly*

TYPICAL - X MODEL
1. *Low speed compression adjuster*

Shock Damping Adjustments (X and LTD Models)

Low Speed Compression Damping

Low speed compression damping controls how the shock absorber reacts to a low suspension velocity (slow compression strokes, in most cases when riding at lower speeds).

ACTION	RESULT ON BIG BUMPS
Increasing low speed compression damping force	Firmer compression damping (slow compression)
Decreasing low speed compression damping force	Softer compression damping (slow compression)

Use a flat screwdriver to adjust it.

TYPICAL - LTD MODEL
1. *Low speed compression adjuster*

Turning it clockwise (H) **increases** shock damping action (stiffer).

Turning it counterclockwise (S) **decreases** shock damping action (softer).

High Speed Compression Damping

X Model Only

High speed compression damping controls how the shock absorber reacts to a high suspension velocity (quick compression strokes, in most cases when riding at higher speeds).

ACTION	RESULT ON SMALL BUMPS
Increasing high speed compression damping force	Firmer compression damping (fast compression)
Decreasing high speed compression damping force	Softer compression damping (fast compression)

Use a 17 mm wrench to adjust it.

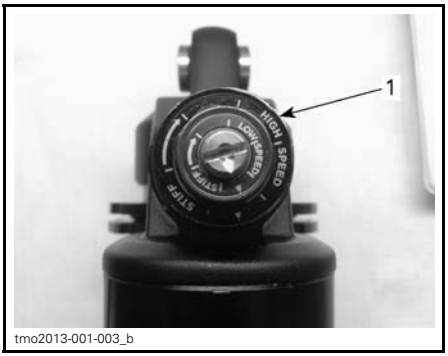

TYPICAL
1. *High speed compression adjuster (17 mm socket)*

Turning it clockwise (H) **increases** shock damping action (harder).

Turning it counterclockwise (S) **decreases** shock damping action (softer).

Rebound Damping

X Model Only

Use a flat screwdriver to adjust it.

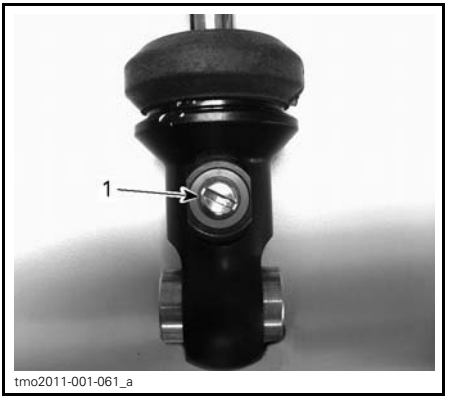

1. *Rebound adjuster*

Turning it clockwise (H) **increases** shock damping action (harder).

Turning it counterclockwise (S) **decreases** shock damping action (softer).

Shock Air Pressure Adjustment (LTD Models with ACS)

The Air Controlled Suspension (ACS) system allows the operator to adjust the air pressure in the front and rear shock absorbers simultaneously or separately using controls without having to get off the vehicle. By changing the ACS setting, air pressure in the front and rear shock absorbers will change to provide a multitude of different suspension adjustments.

The ACSindicator can be accessed by pressing the ACS button or Mode button.

NOTICE **ACS setting will change when using the ACS button to access the air controlled (ACS) indicator.**

NOTE: The ACS suspension will NOT self-adjust unless the engine is running.

The ACS has 2 modes for suspension adjustment;
- Automatic mode
- Manual mode.

Automatic Mode

The automatic mode allows for simultaneous adjustments on the front and rear suspensions.

To Enter Automatic Mode:

Press the MODE button until either ACS AUTO or ACS MAN is displayed.

Press SET button to have current ACS mode blink on screen

Press SET button to select ACS AUTO mode.

NOTE: Selected ACS Setting from ACS1 to ACS6 displayed through gearbox position indicator.

tmo2012-003-221_c

Press and hold SET button to confirm selection.

To Adjust ACS in the Automatic Mode:

Use the ACS button to select desired ACS setting for both front and rear suspensions.

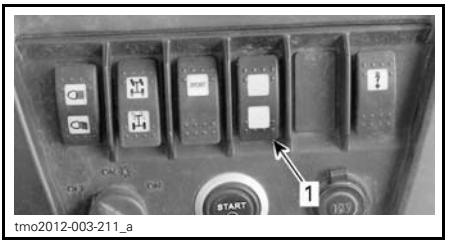

tmo2012-003-211_a

1. ACS button

Refer to table to select appropriate ACS setting.

ACS SUSPENSION SETTINGS		
SETTING	RIDING COMFORT	RIDING CONDITION
ACS 1	Softest	Trail riding
ACS 2	Soft	
ACS 3	Semi-soft	Trail riding with cargo
ACS 4	Semi-firm	
ACS 5	Firm with high ground clearance	Soft terrain riding (muddy, watery) and obstacles
ACS 6	Firmest and highest ground clearance	Soft terrain riding (muddy, watery) and obstacles or Carrying heavy loads

⚠ WARNING

Always adjust the ACS suspension setting according to load, riding condition, and speed.

Manual Mode

The manual mode allows for independent adjustments on the front and rear suspensions.

To Enter Manual Mode:

Press the MODE button until either ACS AUTO or ACS MAN is displayed.

Press SET button to have current ACS mode blink on screen.

Press SET button to select ACS MAN mode.

NOTE: ACS set points and actual settings displayed through fuel, temp and gearbox position indicators.

tmo2012-003-221_a

Press and hold SET button to confirm selection.

To Adjust Front Suspension:

Press on the OVERRIDE button until front (F) is blinking to select front (F) suspension setting.

tmo2012-001-001_b

1. Override switch

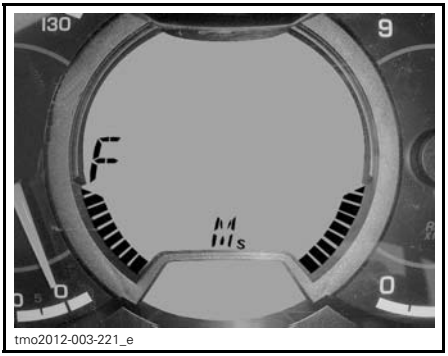

tmo2012-003-221_e

Press and hold ACS button to lower or raise the front suspension until desired setting is achieved.

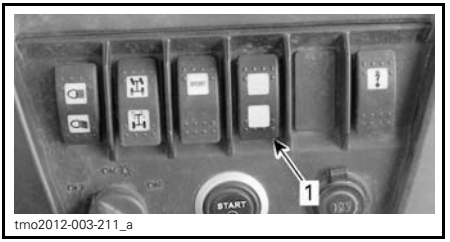

tmo2012-003-211_a

1. ACS button

To Adjust Rear Suspension:

Press on the OVERRIDE button until rear (R) is blinking to select rear (R) suspension setting.

tmo2012-001-001_b

1. Override switch

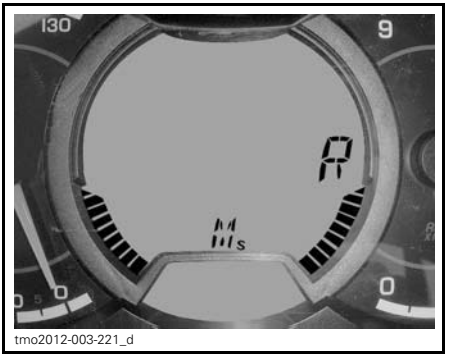

tmo2012-003-221_d

Use the ACS button to lower or raise the rear suspension.

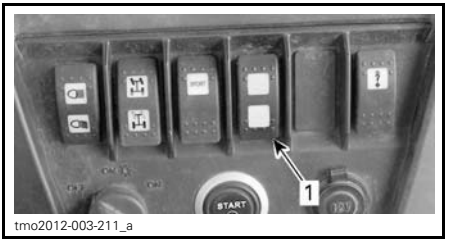

tmo2012-003-211_a

1. ACS button

NOTE: Fuel and temperature indicators will respectively become front and rear ACS setting indicators.

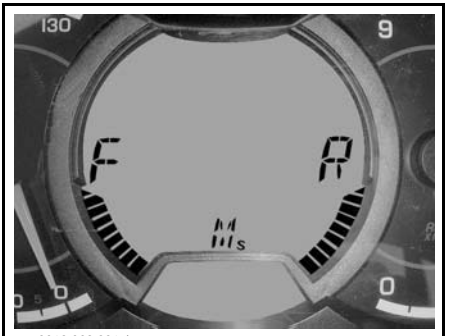

tmo2012-003-221_b

Quick Mode Selection

The last setting utilized in each mode is stored in the system. This allows for quick selections between the stored automatic mode setting and the stored manual mode setting.

To Enter Quick Mode Selection:

Press the MODE button until either ACS AUTO or ACS MAN is displayed.

Press SET button to have current ACS mode blink on screen.

Press SET button to select desired mode.

tmo2012-003-221_a

tmo2012-003-221_c

Press and hold SET button to confirm selection.

ACS system will adjust to the last settings.

FUEL

Recommended Fuel

Use regular unleaded gasoline containing MAXIMUM 10% ethanol.

The gasoline must have the following minimum octane requirements.

MINIMUM OCTANE RATING	
Inside North America	87 (R + M))/2
Outside North America	92 RON

NOTICE Never experiment with other fuels. Engine or fuel system damages may occur with the use of an inadequate fuel.

Vehicle Fueling Procedure

⚠ WARNING

- Fuel is flammable and explosive under certain conditions.
- Never use an open flame to check fuel level.
- Never smoke or allow flame or spark in vicinity.
- Always work in a well-ventilated area.

1. Stop engine.

⚠ WARNING

Always stop engine before refueling.

2. Have driver and passenger get out of vehicle.

⚠ WARNING

Do not allow anyone to remain in the vehicle while fueling. If there is a fire or explosion during fueling, a vehicle occupant could be unable to quickly leave the area.

3. Unscrew slowly the fuel reservoir cap counterclockwise to remove it.

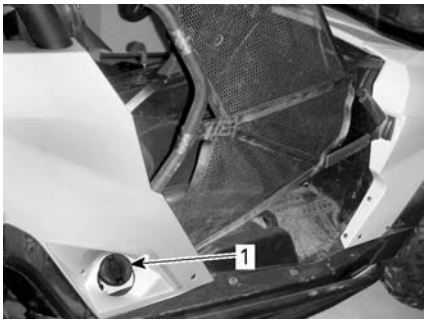

1. Fuel reservoir cap

⚠ WARNING

If a differential pressure condition is noticed (whistling sound heard when loosening fuel reservoir cap) have vehicle inspected and/or repaired before further operation.

4. Insert the spout into the filler neck.
5. Pour fuel slowly so that air can escape from the tank and prevent fuel flow back. Be careful not to spill fuel.
6. Stop filling when the fuel reaches the bottom of filler neck. Do not overfill.

⚠ WARNING

Never top up the fuel tank before placing the vehicle in a warm area. As temperature increases, fuel expands and may overflow.

7. Fully tighten fuel reservoir cap clockwise.

⚠ WARNING

Always wipe off any fuel spillage from the vehicle.

Fueling a Gasoline Container

⚠ WARNING

- Use only an approved gasoline container to store fuel.
- Never fill the gasoline container in the vehicle cargo box or on-the vehicle - an electrical static discharge may ignite the fuel.

BREAK-IN PERIOD

Operation During Break-In

A break-in period of 10 operating hours or 300 km (200 mi) is required for the vehicle.

After the break-in period, the vehicle should be inspected by an authorized Can-Am dealer. Refer to *MAINTENANCE* section.

Engine

During the break-in period:

– Avoid full throttle operation.
– Avoid pressing accelerator pedal more than 3/4 of the stroke.
– Avoid sustained accelerations.
– Avoid prolonged cruising speeds.

However, brief accelerations and speed variations contribute to a good break-in.

Brakes

⚠ WARNING

New brakes will not operate at their maximum efficiency until their break-in is completed. Braking performance may be reduced, so use extra caution.

Belt

A new belt requires a break in period of 50 km (30 mi).

During the break-in period:

– Avoid strong acceleration and deceleration.
– Avoid pulling a load.
– Avoid high speed cruising.

Starting the Engine

Insert key in ignition switch and turn to one of the ON position.

Press the brake pedal.

NOTE: If shift lever is not set to PARK (P), the brake pedal must be pressed to allow engine starting.

Press the engine start button and hold until the engine starts.

NOTE: Do not press the accelerator pedal. If the accelerator pedal is pressed at least 20%, the engine will not start.

Release the engine start button immediately when the engine has started.

NOTICE If engine does not start after a few seconds, do not hold the engine start button more than 10 seconds. Refer to *TROUBLESHOOTING* section.

Shifting the Transmission

Apply brakes and select the desired shift lever position.

Release brakes.

NOTICE When changing gear selection, always completely stop the vehicle and apply the brakes prior to shifting. Damage to the transmission may occur.

Stopping the Engine and Parking the Vehicle

⚠ WARNING

Avoid parking on steep slope as the vehicle may roll away.

⚠ WARNING

Always put the vehicle in PARK when stopped or parked to prevent rolling.

⚠ WARNING

Avoid parking in places where hot parts can start a fire.

When stopped or parked always bring shift lever to park position. This is especially important when parking on a slope. On very steep inclines or if the vehicle is carriyng a cargo, the wheels should be blocked using rocks or bricks.

Select the flattest terrain available for parking.

Release accelerator pedal and use brakes to completely stop the vehicle.

Set shift lever in PARK position.

Turn key in ignition switch to OFF position.

Remove key from ignition switch.

If you must park on a steep incline or if the vehicle is carrying cargo, block the wheels using rocks or bricks.

What to do if Water is Suspected to be in the CVT

If water is present in the CVT, the engine will accelerate but the vehicle will remain still.

NOTICE Stop the engine and drain the water to avoid damage to the CVT.

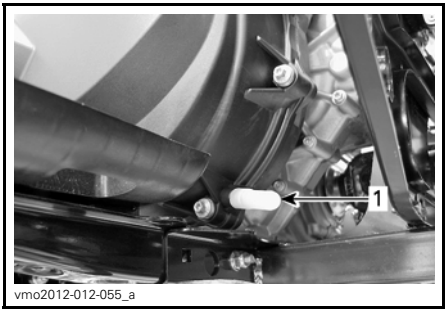

1. CVT drain

CVT drain is accessible through access hole in skid plate under the LH side of the vehicle.

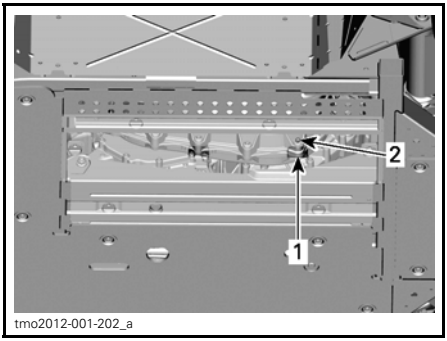

ACCESS HOLE UNDER VEHICLE
1. Access hole in skid plate
2. CVT drain location

See an authorized Can-Am dealer to have the CVT inspected and cleaned.

What to do if Battery is Drained out

The vehicle can be jump started by using the red (+) cable to the battery positive pole and the black (-) cable to the vehicle chassis.

NOTICE Do not connect any electrical source to the steering column.

What to do if Vehicle Rolled Over

Abrupt maneuvers, sharp turns, side hilling or accident may cause vehicle to rollover.

Should the vehicle be rolled over, it will be necessary to have it transported to an authorized Can-Am dealer as soon as possible. NEVER START THE ENGINE!

What to do if Vehicle is Submerged

Should the vehicle become immersed, it will be necessary to have it transported to an authorized Can-Am dealer as soon as possible.

NOTICE Never start the engine as immersion of the vehicle can cause serious damage to the engine if the correct restart procedure is not followed.

TRANSPORTING THE VEHICLE

If your vehicle needs to be transported, it should be carried inside a full size pick-up box or on a flatbed trailer of the proper size and capacity.

NOTICE Do not tow this vehicle — towing can seriously damage the vehicle's drive system.

When contacting a towing or transporting service, be sure to ask if they have a flatbed trailer, loading ramp or power ramp to safely lift the vehicle and tie-down straps. Ensure the vehicle is properly transported as specified in this section.

NOTICE Avoid using chains to tie the vehicle — they may damage the surface finish or plastic components.

⚠ WARNING

If the vehicle is equipped with a windshield, transport it facing forward to avoid damaging the windshield.

To load the vehicle on a platform for transport, proceed as follow:

1. Shift the vehicle into NEUTRAL (N).
2. If the vehicle is equipped with a winch, use the winch to roll the vehicle on the platform.
3. If the vehicle is not equipped with a winch, proceed as follows:
   - 3.1 Put a strap around the lower arm of each front suspension.
   - 3.2 Attach the straps to the winch cable of the towing vehicle.
   - 3.3 Pull the vehicle on the flatbed trailer with the winch.
4. Remove the key from the ignition switch.
5. Strap the front tires by using tire towing straps.
6. Pass a tie-down strap inside each rear wheel.
7. Firmly attach the rear wheels tie-down straps to both sides of the rear of the trailer with ratchets.
8. Ensure that both the front and rear wheels are firmly attached to the trailer.

⚠ WARNING

Make sure no loose objects are present inside vehicle or in cargo box during vehicle transportation.

Front of Vehicle

Place vehicle on a flat non slippery ground.

Ensure vehicle shift lever is set to PARK.

Install an hydraulic jack under front skid plate.

Lift front of vehicle and install a jack stand on each side under frame section in front of the lip for center skid plate.

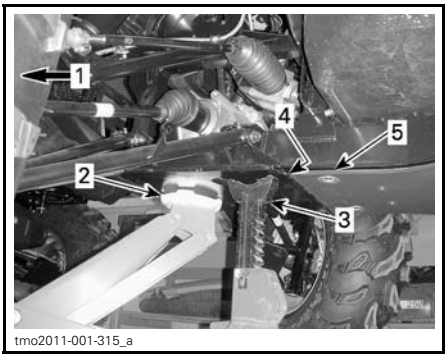

tmo2011-001-315_a

1. Front of vehicle
2. Hydraulic jack
3. Jack stand
4. Lip for center skid plate
5. Center skid plate

Lower hydraulic lift and ensure vehicle is supported safely onto both jack stands.

Rear of Vehicle

Place vehicle on a flat non slippery ground.

Activate 4WD mode.

Ensure vehicle shift lever is set to PARK.

Install an hydraulic jack under the trailer hitch.

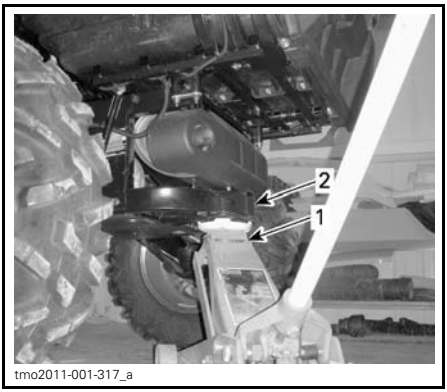

tmo2011-001-317_a

1. Hydraulic jack
2. Trailer hitch

Lift rear of vehicle and install a jack stand on each side under frame section in front of rear wheel.

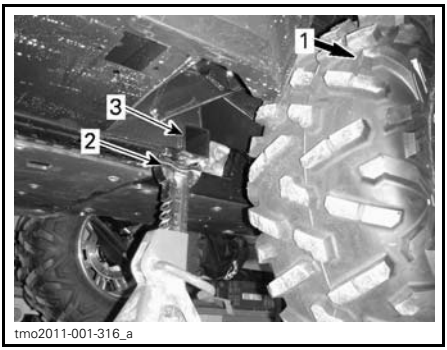

tmo2011-001-316_a

1. Rear of vehicle
2. Jack stand
3. Frame section

Lower hydraulic lift and ensure vehicle is supported safely onto both jack stands.

This page is intentionally blank

MAINTENANCE

BREAK-IN INSPECTION

This vehicle should be serviced after the first 10 hours or 300 km (200 mi) of operation, whichever comes first, by an authorized Can-Am dealer. The break-in inspection is very important and must not be neglected.

NOTE: The break-in inspection is at the expense of the vehicle owner.

Date of inspection	Authorized dealer signature
	Dealer name

BREAK-IN INSPECTION CHART	INSPECT	CLEAN	LUBRICATE	TIGHTEN	ADJUST	REPLACE
ENGINE						
Engine oil and filter						X
Valve clearance	X				X	
Engine Air Filter	X					
Engine seals	X					
Engine mounting fasteners	X					
Exhaust system	X					
COOLING SYSTEM						
Radiator/cooling system leak (leak test)	X	X				
FUEL SYSTEM						
Fuel lines, fuel rails, connections, check valves and fuel tank leak test	X					
ELECTRICAL SYSTEM						
Battery connections	X					
CVT TRANSMISSION						
CVT air inlet/outlet	X	X				
CVT air filter	X	X				
GEARBOX						
Gearbox oil						X
Vehicle speed sensor		X				
DRIVE SYSTEM						
Front differential/rear final drive oil						X
Front differential/rear final drive (seals and vents)	X					
Front and rear propeller shaft joints	X		X			

BREAK-IN INSPECTION CHART	**INSPECT**	**CLEAN**	**LUBRICATE**	**TIGHTEN**	**ADJUST**	**REPLACE**
WHEEL						
Wheel nuts/studs	X			X		
Wheel bearings	X			X		
Wheel beadlock (X model)				X		
STEERING SYSTEM						
Steering system (column, bearing, etc.)	X					
Front wheel alignment	X					
BRAKES						
Brake fluid	X					
OCCUPANT RESTRAINT SYSTEM						
Seat Belts	X					
Side Nets	X					
BODY/CHASSIS						
Cage fasteners	X					
Upper and lower tailgates latches	X					
Seats latch	X					

MAINTENANCE SCHEDULE

Maintenance is very important for keeping your vehicle in safe operating condition. Proper maintenance is the owner's responsibility. The vehicle should be serviced as per the maintenance schedule.

The following message appears in the gauge after every 50 hours of operation, to remind you of maintenance requirements: MAINTENANCE SOON. To erase message, refer to *MULTIFUNCTION GAUGE (LCD)* or *MULTIFUNCTION GAUGE (ANALOG/DIGITAL)* subsections.

The maintenance schedule does not exempt the pre-ride inspection.

⚠ WARNING

Failure to properly maintain the vehicle according to the maintenance schedule and procedures can make it unsafe to operate.

EVERY 750 KM (500 MI) OR 25 HOURS OF OPERATION (WHICHEVER COMES FIRST)
Replace engine air filter (when riding in severe conditions)
Clean the CVT air inlet/outlet
Inspect and clean the CVT air filter
Inspect the brake pads
Tighten the wheel lug nuts
Inspect the drive shaft boots and protectors
Inspect passenger grab handles condition
Inspect hitch condition
Inspect driver and passenger seat latch operation
Inspect tailgates latch operation
Inspect and clean the ACS compressor air filter (service more often if required under severe use such as dusty area, sand, snow, wet or muddy conditions)

EVERY 1 500 KM (1,000 MI) OR 50 HOURS OF OPERATION (WHICHEVER COMES FIRST)
Replace the engine air filter (when riding in normal conditions)
Verify battery condition
Inspect the front differential/rear final drive oil level
Inspect the drive shaft joints condition
Inspect the front/rear propeller shaft joint condition
Grease the front/rear propeller shaft joints
Inspect the tie rod ends

EVERY 1 500 KM (1,000 MI) OR 50 HOURS OF OPERATION (WHICHEVER COMES FIRST)
Inspect shock absorbers for any leaks
Lubricate shock absorber spherical bearings (X model)
Inspect and lubricate front suspension arms
Inspect brake fluid level
Replace the ACS compressor air filter (service more often if required under severe use such as dusty area, sand, snow, wet or muddy conditions)

EVERY 3 000 KM (2,000 MI) OR 100 HOURS OF OPERATION OR 1 YEAR (WHICHEVER COMES FIRST)
Inspect seat belts (check for any damages and proper operation)
Inspect side nets (check for any damages and they must buckle properly)
Replace the engine oil and filter
Inspect and adjust the valve clearance
Inspect and clean the muffler spark arrester
Check engine coolant strength
Inspect throttle body
Clean the fuel pump pre-filter
Inspect the fuel pump pressure
Replace fuel vent breather filter
Inspect the drive belt
Inspect, clean and lubricate the drive and driven pulleys (including the one-way bearing)
Inspect the gearbox oil level and condition
Inspect wheel bearings
Inspect the steering system (column, bearing, etc.)
Inspect and clean the brake system
Inspect frame for any damage
Replace rear final drive oil
Inspect centrifugal levers and rollers of drive pulley
Inspect ACS shock absorbers hoses and fittings

EVERY 6 000 KM (4,000 MI) OR 200 HOURS OF OPERATION OR 2 YEARS (WHICHEVER COMES FIRST)
Replace the engine coolant
Verify the cooling system and proceed with a cooling system leak test and a pressure cap test
Verify the fuel system and perform a leak test
Replace Spark plugs
Replace the front differential oil
Replace gearbox oil
Clean the vehicle speed sensor
Replace the brake fluid

This section includes instructions for basic maintenance procedures. If you have the necessary mechanical skills and the required tools, you can perform these procedures. If not, see your authorized Can-Am dealer.

Other important items in the maintenance schedule that are more difficult and require special tools are best performed by your authorized Can-Am dealer.

NOTE: Maintenance message can be removed by alternately pressing the override switch and brake pedal 3 times at power up.

⚠ WARNING

Unless otherwise indicated, always turn ignition switch to the OFF position before performing any maintenance and remove key.

⚠ WARNING

Should removal of a locking device be required (e.g. lock tab, self-locking fastener, etc.) , always replace it with a new one.

Engine Air Filter

NOTICE Never modify the air intake system. Otherwise, engine performance degradation or damage can occur. The engine is calibrated to operate specifically with these components.

Engine Air Filter Replacement Guideline

Engine Air filter replacement frequency should be adjusted according to riding conditions as it is critical to ensure proper engine performance and life span.

Engine Air filter replacement frequency must be increased for the following severe riding conditions:

– Riding on dry sand.
– Riding on dry dirt covered surfaces.
– Riding on dry gravel trails or similar conditions.
– Riding in areas with high concentration of seeds or crop husks.
– Riding in severe snow conditions.

NOTE: Riding in a group under these conditions would increase even more the air filter replacement frequency.

Engine Air Filter Removal

1. Remove service cover.

1. Service cover

2. Release clamps and remove the engine air filter housing cover.

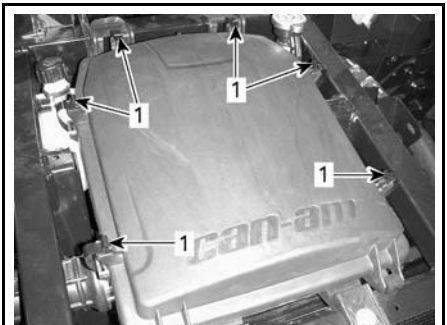

1. Release clamps

3. Remove engine air filter.

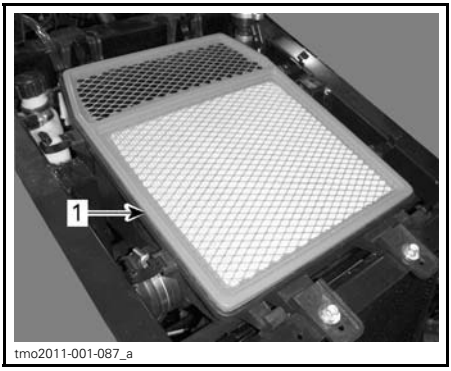

1. Engine air filter

Engine Air Filter Housing Cleaning

1. If there is water in the first air chamber, remove the drain plug, from underneath to expel water.

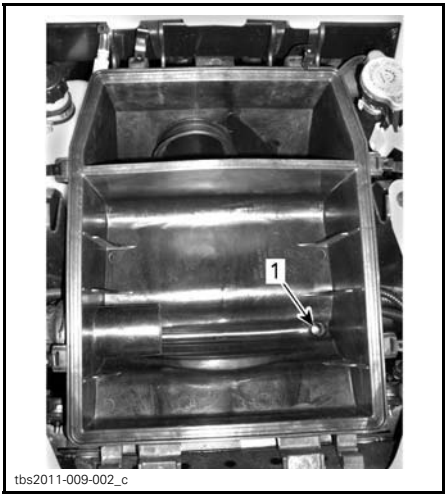

1. Drain hole

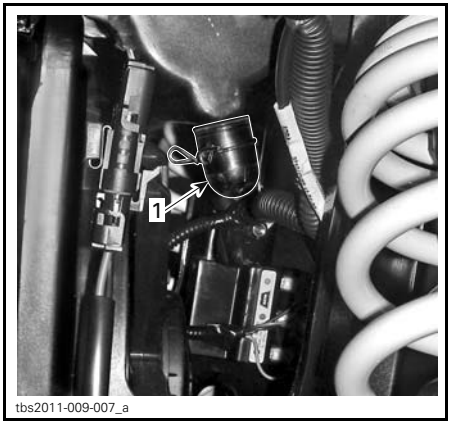

DRAIN PLUG ACCESS FROM LH SIDE OF VEHICLE

1. Remove drain plug to expel water

2. Clean both sections of the engine air filter housing with a vacuum cleaner.

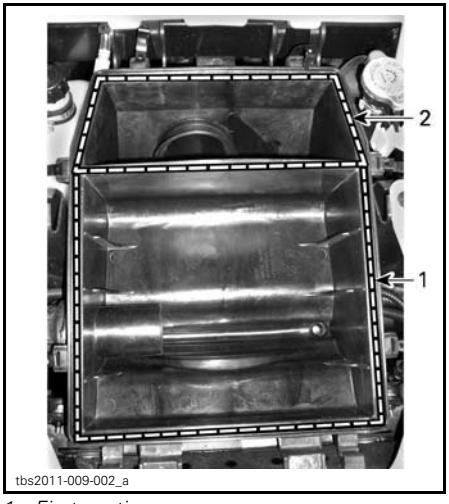

1. First section
2. Second section (clean chamber)

Engine Air Filter Housing Inspection

Verify that the engine air filter housing edges to hold the filter are straight and not damaged or warped.

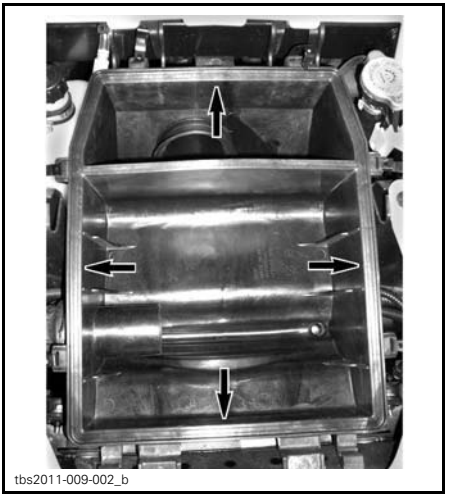
tbs2011-009-002_b

Engine Air Filter Cleaning

Clean engine air filter by tapping out heavy dust from paper element, this will allow dirt and dust to get out of the paper filter.

NOTICE It is not recommended to blow compressed air on the paper element; this could damage the paper fibers and reduce its filtration ability when used in dusty environments. If engine air filter is too dirty and cannot be cleaned following the recommended procedure, it should be replaced.

Engine Air Filter Installation

1. Install engine air filter.
2. Verify that engine air filter rubber seal has no gap with the engine air filter housing.

NOTICE If the fit is not good, dust may bypass the engine air filter.

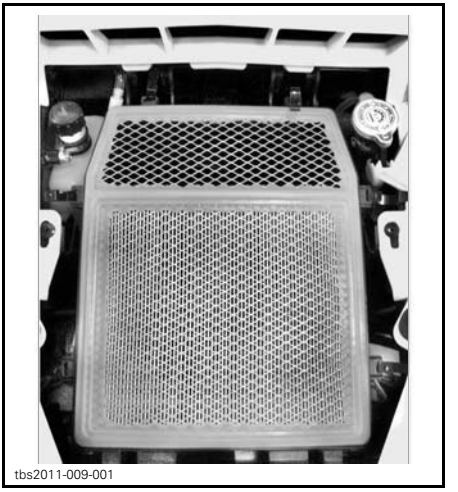
tbs2011-009-001

3. Verify that the cover fits well on the engine air filter housing before closing clamps.

tbs2011-009-003

CVT Air Filter

CVT air filter inspection and cleaning frequency should be adjusted according to riding conditions as it is critical to ensure proper engine performance and life span.

CVT Air filter inspection and cleaning frequency must be increased for the following severe riding conditions:

- Riding on dry sand.
- Riding on dry dirt covered surfaces.
- Riding on dry gravel trails or similar conditions.
- Riding in areas with high concentration of seeds or crop husks.
- Riding in severe snow conditions.

NOTE: Riding in a group in these conditions would increase even more the air filter replacement requirement.

CVT Air Filter Removal

1. Remove CVT air filter plastic cover located on left hand side of hood near driver.

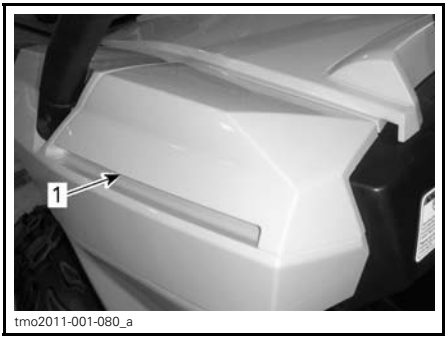

1. CVT air filter plastic cover

2. Slide the cover rearward.

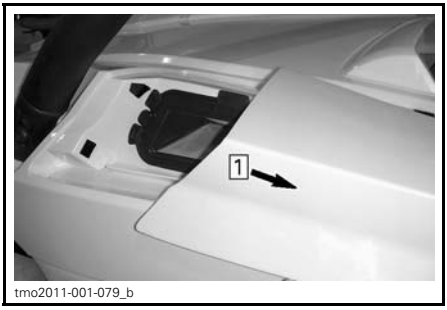

Step 1: Slide rearward

3. Pull CVT air filter out.

1. CVT air filter

CVT Air Filter Inspection and Cleaning

1. Inspect filter and replace if damaged.

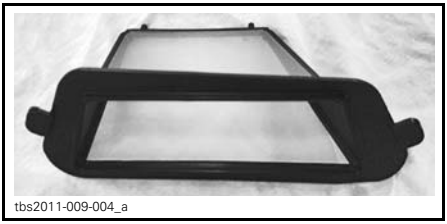

2. Clean filter, using soft soap and water, then water rinse.
3. Gently shake off excess water and allow filter to dry at room temperature.
4. Clean inside the CVT air inlet with a vacuum cleaner.

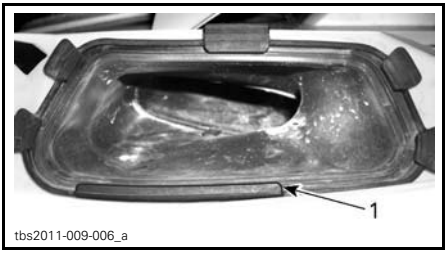

1. CVT air inlet

CVT Air Filter Installation

Reinstall CVT air filter and cover.

NOTE: Maintaining a clean CVT air filter will maximize air flow for an optimum CVT components lifespan.

Engine Oil

Engine Oil Level Verification

NOTICE Operating the engine with an improper level may severely damage engine.

With vehicle on a level surface and engine cold, check the oil level as follows:

1. Remove passenger seat.
2. Unscrew dipstick then remove it and wipe clean.

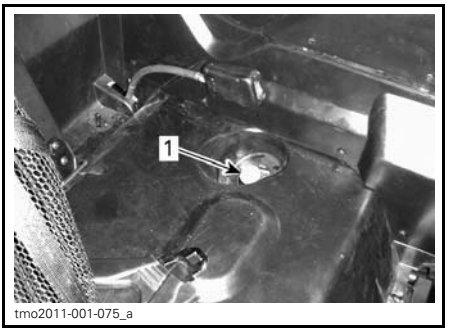

1. Dipstick

3. Reinstall dipstick, screw in it completely.
4. Remove dipstick and check oil level. It should be near or equal to the upper mark.

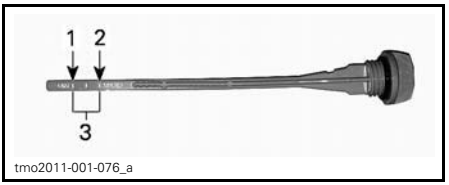

TYPICAL
1. MIN
2. MAX
3. Operating range

To add oil, remove the dipstick. Place a funnel into the dipstick tube.

Add a small amount of recommended oil and recheck oil level.

Repeat the above procedures until oil level reaches the dipstick's upper mark.

NOTE: Do not overfill. Wipe off any spillage.

Properly tighten dipstick.

Install passenger seat.

Recommended Engine Oil

RECOMMENDED ENGINE OIL	
SEASON	TYPE
Summer	XPS 4-STROKE SYNTH. BLEND OIL (SUMMER) (P/N 293 600 121)
Winter	XPS 4-STROKE SYNTHETIC OIL (ALL CLIMATE) (P/N 293 600 112)

NOTE: The XPS oil is specially formulated to meet the lubrication requirements of this engine. BRP strongly recommends the use of its XPS 4-stroke oil.

NOTICE Damages caused by the use of oil not suitable for this engine will not be covered by the BRP limited warranty.

If XPS engine oil is not available, use a 4-stroke SAE 5W 40 engine oil that meets or exceeds the requirements for API service classification SM, SL or SJ. Always check the API service label certification on the oil container it must contain at least one of the above standards.

Engine Oil Change

Place vehicle on a level surface.

Oil change and oil filter replacement should be done with a warm engine.

⚠ CAUTION The engine oil can be very hot. Wait until engine oil is warm.

Place a drain pan under the engine drain plug area.

Clean the drain plug area.

Unscrew drain plug and discard the gasket ring.

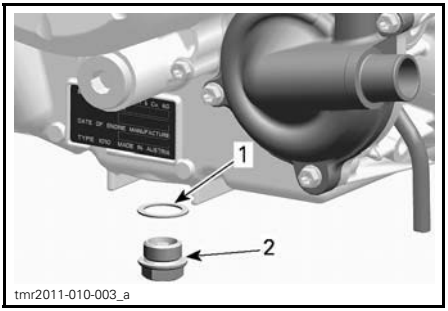

1. Gasket ring
2. Drain plug

Remove dipstick.

Allow oil to drain completely from the crankcase.

Clean the magnetic drain plug from metal shavings and residue. Presence of debris gives an indication of internal engine damage.

Install a NEW gasket ring on the drain plug.

NOTICE Never use the gasket ring a second time. Always replace by a new one.

Install and tighten drain plug to the recommended torque.

DRAIN PLUG TIGHTENING TORQUE
30 N•m ± 2 N•m (22 lbf•ft ± 1 lbf•ft)

Replace oil filter. Refer to *OIL FILTER* in this subsection.

Refill engine with recommended engine oil.

ENGINE OIL CAPACITY
2.2 L (2.3 qt (U.S. liq.))

Oil Filter

Oil Filter Access

Remove the passenger seat.

Remove the right hand side engine console panel.

Oil Filter Removal

Clean oil filter area.

Remove oil filter cover screws.

Remove oil filter cover.

Remove oil filter.

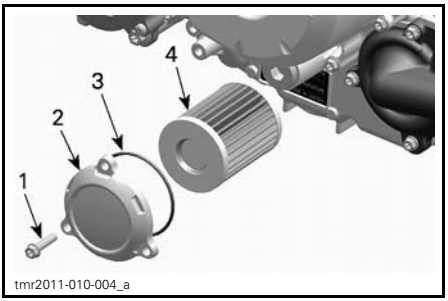

1. Oil filter screw
2. Oil filter cover
3. O-ring
4. Oil filter

Oil Filter Installation

Check and clean the oil filter inlet and outlet area for dirt and other contaminations.

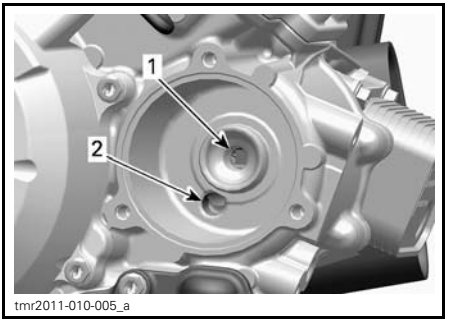

1. Outlet to the engine oil providing system
2. Inlet from the oil pump to the oil filter

Install a NEW O-ring on oil filter cover.

Install the filter into the cover.

Apply engine oil on O-ring and grease on the end of filter.

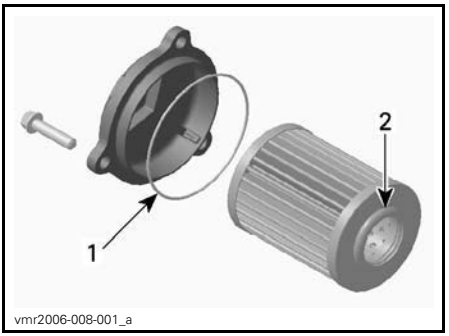

1. Slightly oil
2. Slightly oil

Install the cover on the engine.

Tighten oil filter cover screws to recommended torque.

OIL FILTER COVER SCREWS TIGHTENING TORQUE
10 N•m ± 1 N•m (89 lbf•**in** ± 9 lbf•**in**)

Radiator

Radiator Inspection and Cleaning

Periodically check the radiator area for cleanliness.

1. Radiator

Inspect radiator and hoses for leaks or any damage.

Inspect radiating fins. They must be clean, free of mud, dirt, leaves and any other deposit that would prevent the radiator to cool properly.

If available, use a garden hose to rinse the radiating fins.

⚠ CAUTION Never clean radiator with your hands when it is hot. Let the radiator cool down before cleaning.

NOTICE Be careful not to damage the radiating fins when cleaning. Do not use any object/tool that could damage the fins. When hosing, use low pressure only. Never use a HIGH PRESSURE washer.

Engine Coolant

Engine Coolant Level Verification

⚠ WARNING

Check coolant level with engine cold.

1. Place vehicle on a level surface.
2. Open service cover.
3. Remove the pressure cap.

⚠ WARNING

In order to avoid potential burns, do not remove the pressure cap if the engine is hot.

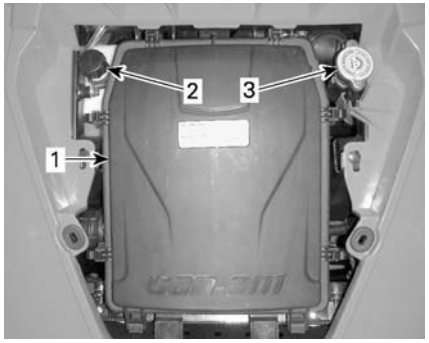

tmo2011-001-313_b

1. Air filter housing cover
2. Coolant expansion tank cap
3. Pressure cap

4. Ensure cooling system is full up to the pressure cap seat.

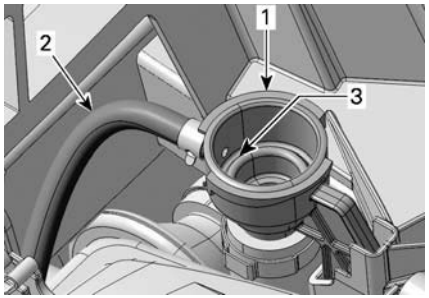

tmr2011-011-028_a

1. Cooling system refill adapter
2. Expansion tank hose
3. Coolant system full level (pressure cap seat)

5. Add coolant in system as necessary.
6. Properly reinstall pressure cap on refill adapter.
7. Check coolant level in expansion tank.

NOTE: Coolant level can be checked by looking at the side of the coolant expansion tank under the RH front fender.

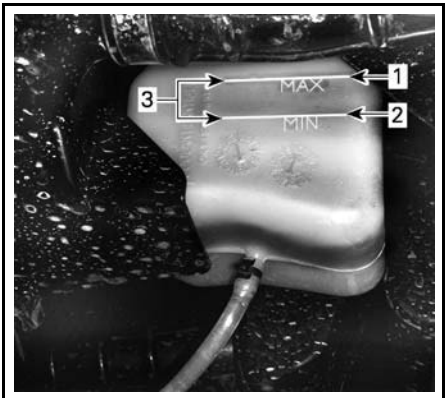

tmo2011-001-088_a

COOLANT EXPANSION TANK
1. MAX. level
2. MIN. level
3. Operating range

8. Add coolant if level is below MIN. mark. Use a funnel to avoid spillage. Do not overfill.
9. Properly reinstall coolant expansion tank cap.
10. Reinstall service cover.

NOTE: A cooling system that frequently requires addition of coolant is an indication of leaks or engine problems.

Recommended Engine Coolant

COOLANT	
BRP recommended product	BRP PREMIXED COOLANT (P/N 219 700 362)
Alternative, or if not available	Distilled water and antifreeze solution (50% distilled water, 50% antifreeze)

NOTICE Always use ethylene-glycol antifreeze containing corrosion inhibitors specifically for internal combustion aluminum engines.

Engine Coolant Replacement

Cooling System Draining

⚠ WARNING

In order to avoid potential burns, do not remove the pressure cap or loosen the coolant drain plug if the engine is hot.

1. Remove service cover.
2. Remove the cooling system pressure cap.

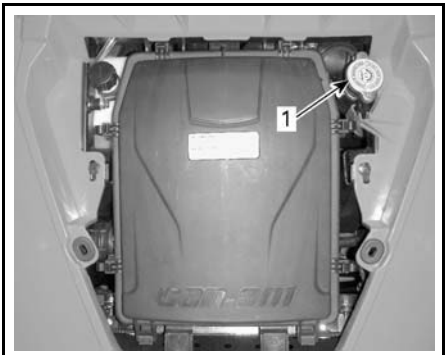

1. Pressure cap

3. Unscrew coolant drain plug and drain the coolant into a suitable container.

NOTE: The drain plug is accessible from underneath the vehicle.

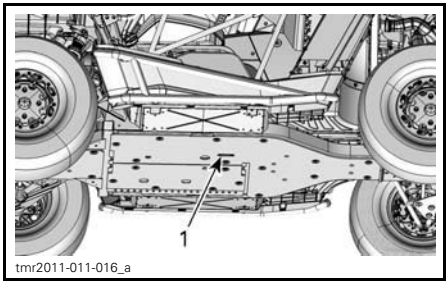

1. Cooling system drain plug access

NOTE: Do not unscrew the coolant drain plug completely.

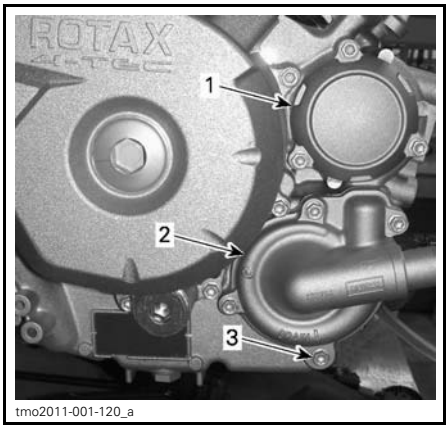

1. Oil filter cover
2. Water pump cover
3. Coolant drain plug

4. Disconnect the lower radiator hose and drain the remaining coolant into a suitable container.

NOTE: Take note of the position of the hose clamp on the lower radiator hose at the radiator.

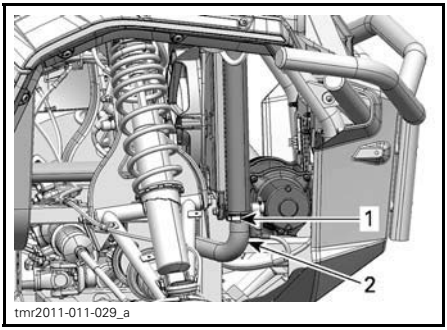

tmr2011-011-029_a

1. Hose clamp position to note
2. Lower radiator hose to remove

5. Drain cooling system completely.
6. Reinstall cooling system drain plug.

COOLING SYSTEM DRAIN PLUG TORQUE
9 N•m to 11 N•m (80 lbf•**in** to 97 lbf•**in**)

7. Reinstall radiator hose as noted prior to removal.

RADIATOR HOSE CLAMP
2.5 N•m to 3.5 N•m (22 lbf•**in** to 31 lbf•**in**)

8. Siphon the cooling system expansion tank.
9. Fill cooling system with coolant, refer to *COOLING SYSTEM BLEEDING* procedure.

Cooling System Bleeding

800R Models

1. Unscrew bleed screw on thermostat housing cover of front cylinder.

tmo2011-001-094_a

TYPICAL
1. Bleed screw

1000 Models

2. Unscrew bleed screws on thermostat housing covers of both front and rear cylinders.

tmo2011-001-501_a

1. Front cylinder bleed screw

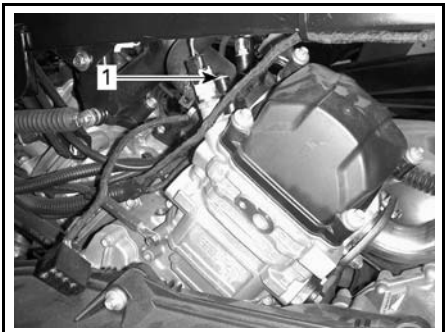

tmo2011-001-502_a

1. Rear cylinder bleed screw

All Models

3. Remove the pressure cap.
4. Fill the cooling system until coolant comes out of the bleed screw(s).
5. Install the bleed screw(s) using NEW gasket ring(s) and torque as per following chart.

BLEED SCREW INSTALLATION	
GASKET RING	TORQUE
New	4.4 N•m to 5.6 N•m (39 lbf•**in** to 50 lbf•**in**)

6. Continue adding coolant until system is full up to the pressure cap seat in the refill adapter.

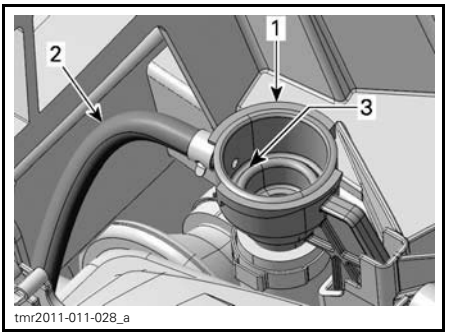

1. Cooling system refill adapter
2. Expansion tank hose
3. Coolant system full level (pressure cap seat)

7. Install pressure cap.

NOTICE The following steps must be carried out as specified to ensure proper cooling system bleeding in addition to the previous steps.

8. Lift the entire front end of the vehicle so the front tires are 60 cm (2 ft) above the ground for at least 1 minute.

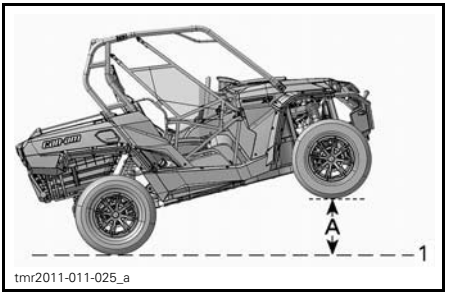

ENTIRE FRONT END LIFTED
1. Ground level
A. 60 cm (24 in)

9. Lower vehicle to the ground.
10. Remove pressure cap and add coolant as required.
11. Install pressure cap.
12. Lift driver's side of vehicle 60 cm (2 ft) above it's horizontal position for at least 1 minute.

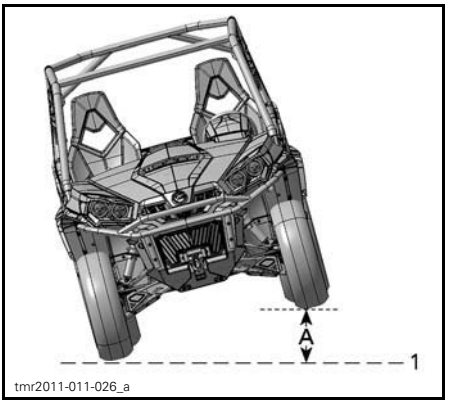

DRIVER'S SIDE LIFTED
1. Ground level
A. 60 cm (24 in)

13. Lower vehicle to the ground.
14. Remove pressure cap and add coolant as required up to the pressure cap seat in the refill adapter.

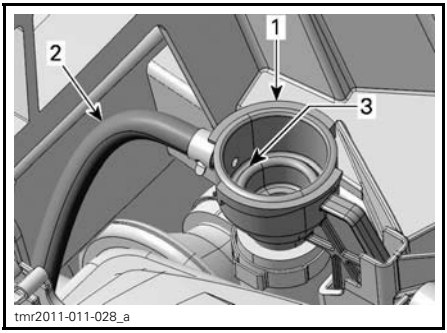

tmr2011-011-028_a

1. Cooling system refill adapter
2. Expansion tank hose
3. Coolant system full level (pressure cap seat)

15. Install the pressure cap.
16. Check coolant level in the coolant expansion tank and fill to the MIN. level (as required).
17. Run engine at idle with the pressure cap ON until the cooling fan cycles on for a second time.
18. Stop the engine and let it cool down.

⚠ WARNING

In order to avoid potential burns, do not remove the pressure cap if the engine is hot.

19. When the engine is cool, remove pressure cap and add coolant if required.
20. Install pressure cap.
21. Check coolant level in the expansion tank. Add coolant as required. Refer to *ENGINE COOLANT LEVEL VERIFICATION* in this subsection.

Muffler Spark Arrester

Muffler Spark Arrester Cleaning and Inspection

⚠ **CAUTION** Never perform this operation immediately after the engine has been running as exhaust system is very hot.

Remove the muffler cover.

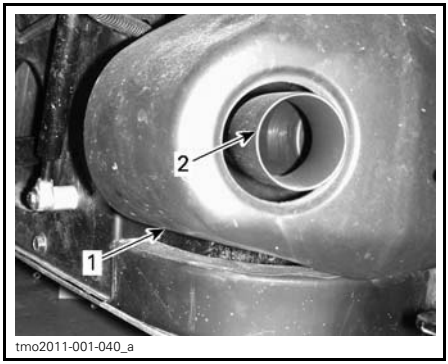

tmo2011-001-040_a

1. Muffler cover
2. Exhaust tail pipe

Remove and discard the tail pipe retaining screws.

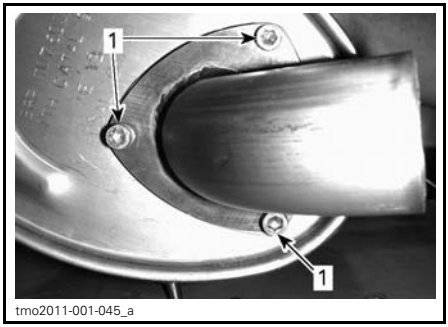

tmo2011-001-045_a

1. Retaining screws

Remove exhaust tail pipe, gasket (discard) and spark arrester.

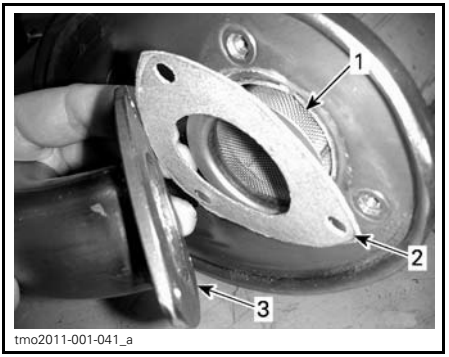

1. Spark arrester
2. Gasket
3. Exhaust tail pipe

Remove carbon deposits from the spark arrester using a brush.

NOTICE Use a soft brush and be careful to avoid damaging spark arrester mesh.

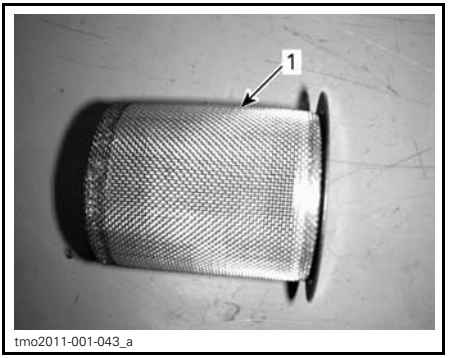

1. Clean spark arrester

Inspect mesh of spark arrester for any damage. Replace as required.

Inspect spark arrester chamber in muffler. Remove any debris as required.

Reinstall the muffler spark arrester in the reverse of the removal procedure. However pay attention to the following.

Install new gasket and retaining screws. Torque to specification.

TORQUE	
Tailpipe retaining screw	11 N•m ± 1 N•m (97 lbf•**in** ± 9 lbf•**in**)

Gearbox Oil

Gearbox Oil Level Verification

Place the vehicle on a level surface. Select PARK position.

Check the gearbox oil level by removing the gearbox oil level plug.

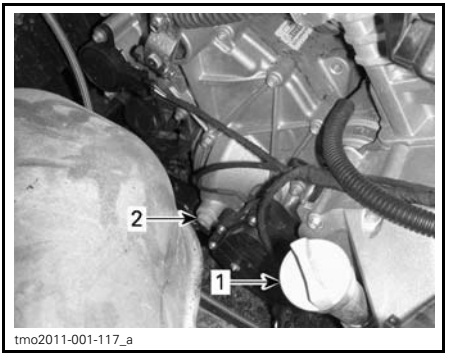

1. Engine oil dipstick
2. Gearbox oil level plug

The oil should be level with the bottom of the oil level hole.

NOTICE Operating the gearbox with an improper oil level may severely damage gearbox.

Recommended Gearbox Oil

Use the following gearbox oil.

RECOMMENDED GEARBOX OIL
XPS synthetic gear oil (P/N 293 600 140)

NOTE: The XPS oil is specially formulated to meet the lubrication requirements of this gearbox. BRP strongly recommends the use of its XPS oil. However, if the XPS synthetic gear oil is not available, use the following lubricant:

GEARBOX OIL REQUIREMENT
75W 140 API GL-5 synthetic gear oil

NOTICE Do not use another type of oil when servicing.

Gearbox Oil Change

NOTE: When replacing the gearbox oil, it is recommended to clean the vehicle speed sensor (VSS) at the same time.

Place the vehicle on a level surface.

Clean drain plug area.

Clean the oil level plug area.

Under the vehicle, place a drain pan underneath the oil drain plug area.

Remove the oil level plug.

Remove the gearbox drain plug.

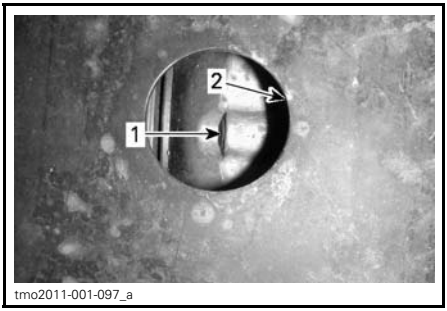

1. Oil drain plug
2. Skid plate opening

Let oil completely drain from gearbox.

Install the drain plug.

NOTE: Clean drain plug from any metallic particles prior to installation.

Refill gearbox.

NOTICE Use ONLY the recommended type of oil.

The oil should be level with the bottom of the oil level orifice.

NOTICE Do not overfill.

Reinstall oil level plug.

Wipe off any spillage.

Spark Plugs

Access to Spark Plugs

1. Remove both seats.
2. Remove upper console retaining screws and plastic rivets.
3. Slightly lift upper console to allow removal of lower console.
4. Remove lower console plastic rivets.
5. Pull lower console out of location.

Spark Plug Removal

Unplug spark plug cable.

NOTE: Spark plug removal procedure is the same for both cylinders.

Clean spark plug and cylinder head with pressurized air.

⚠ CAUTION Always wear safety goggles when using pressurized air.

Unscrew spark plug completely then remove it.

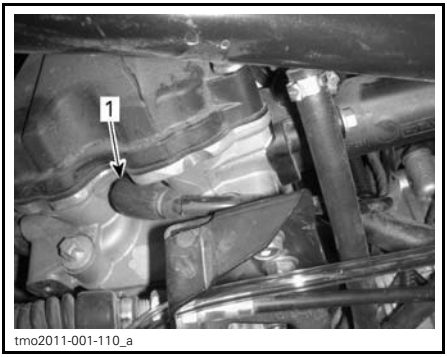

RH SIDE — REAR CYLINDER
1. Spark plug

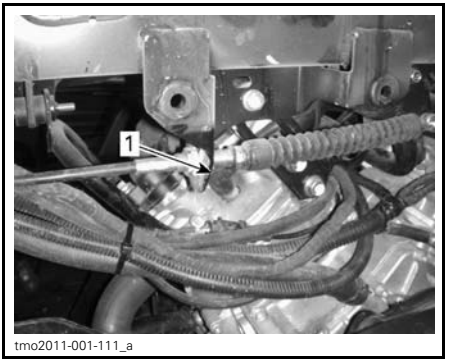

LH SIDE — FRONT CYLINDER
1. Spark plug

Spark Plug Installation

Prior to installation make sure that contact surface of cylinder head and spark plug is free of grime.

Using a feeler gauge, set the spark plug gap.

SPARK PLUG GAP
0.7 mm - 0.8 mm (.028 in - .031 in)

Apply a copper-based anti-seize lubricant over spark plug threads.

Screw spark plug into cylinder heads by hand and tighten with a torque wrench and a proper socket.

TORQUE	
Spark plug	20 N•m ± 2.4 N•m (15 lbf•ft ± 2 lbf•ft)

Battery

Battery Maintenance

NOTICE Never charge a battery while installed in vehicle.

These vehicles are equipped with a VRLA battery (Valve Regulated Lead Acid). It is a maintenance-free type battery, there is no need to add water to adjust electrolyte level.

NOTICE Never remove the battery sealing cap.

Battery Removal

Disconnect BLACK (-) cable first then RED (+) cable.

NOTICE Always respect this order for disassembly; disconnect BLACK (-) cable first.

Remove battery holder retaining screw.

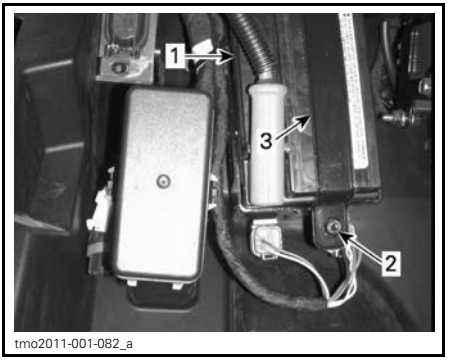

1. Battery
2. Battery holder retaining screw
3. Battery holder

Remove battery holder.

Remove battery.

Battery Cleaning

Clean battery, battery casing and battery posts using a solution of baking soda and water.

Remove corrosion from battery cable terminals and battery posts using a firm wire brush. Battery casing should be cleaned by soft brush and baking soda solution.

Battery Installation

Battery installation is the reverse of the removal procedure.

NOTICE Improper orientation of the battery cables (reverse polarity) will result in damage to the voltage regulator.

CAUTION Always connect RED (+) cable first then BLACK (-) cable.

Fuses

Fuse Replacement

If a fuse is burnt, replace it by one of the same rating.

NOTICE Do not use a higher rated fuse as this can cause severe damage.

Fuse Box Location

The vehicle is equipped with two fuse boxes. They are both located under the console on the driver's side next to the battery.

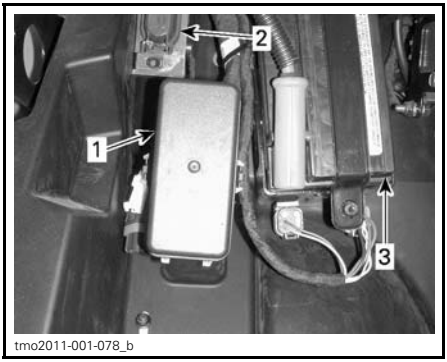

1. Main fuse box
2. Auxiliary fuse box
3. Battery

Fuse Box Description

AUXILIARY FUSE BOX		
NO	DESCRIPTION	RATING
F1	Main	30 A
F2	Accessories (main)	40 A

MAIN FUSE BOX		
NO	DESCRIPTION	RATING
F1	Main	30 A
F2	Accessories (main)	40 A
F4	Speedo/tail lamp	10 A
F5	Ignition/injection/speed sensor	7.5 A
F6	Engine Control Module (ECM)	5 A
F7	4WD Actuator (winch if equipped)	5 A
F8	Key switch/starter solenoid/clock	30 A
F9	Fan	25 A
F10	European component	5 A
F11	Head lamp	30 A
F12	DC Outlet	15 A
F13	Relay driver	5 A
F14	Accessories	15 A
F15	Fuel pump	5 A

NOTE: Fuses are identified inside fuse box cover.

Lights

Always check light operation after replacement.

Headlight Bulb Replacement

NOTICE Never touch glass portion of a halogen bulb with bare fingers, it shortens its operating life. If glass is touched, clean it with isopropyl alcohol which will not leave a film on the bulb.

Unplug connector from bulb.

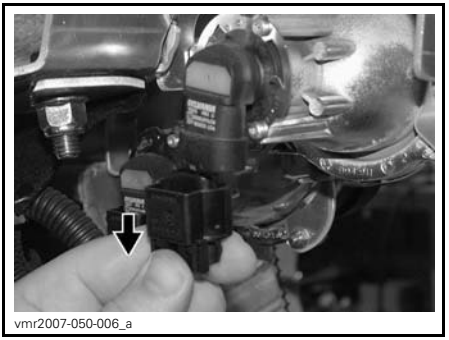
vmr2007-050-006_a

TYPICAL

Rotate bulb.

vmr2007-050-007_a

TYPICAL

Pull out bulb.

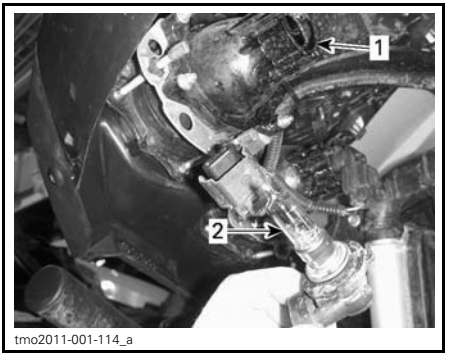

tmo2011-001-114_a

1. *Light bulb socket*
2. *Light bulb*

Properly reinstall removed parts in the reverse order of their removal.

Validate headlights operation.

Headlight Beam Aiming

Turn adjustment screws to adjust beam height to your convenience.

NOTE: Adjust headlights evenly.

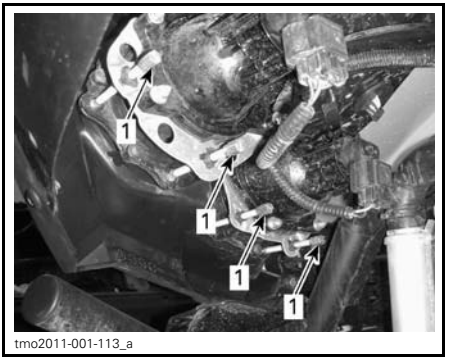

tmo2011-001-113_a

1. *Adjustment screws*

Taillight Bulbs Replacement

Open upper tailgate.

Remove both taillight retaining screws.

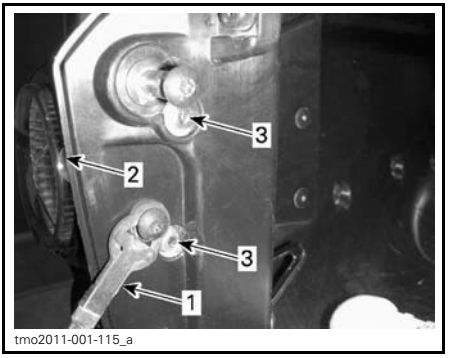

tmo2011-001-115_a

TYPICAL
1. *Tailgate cable*
2. *Tail light*
3. *Retaining screws*

Pull tail light out of its location.

Remove bulb socket from taillight.

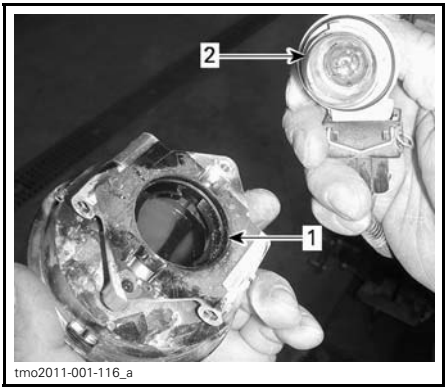

1. Tail light
2. Light bulb and socket

Push the bulb in and hold while turning counterclockwise to release.

Installation is the reverse of the removal procedure.

Position Lights Bulbs Replacement

Pull bulb out.

Installation is the reverse of removal.

Drive Shaft Boot and Protector

Drive Shaft Boot and Protector Inspection

Visually inspect drive shaft protectors and boots conditions.

Check protectors for damage or rubbing against shafts.

Check boots for cracks, tears, leaking grease, etc.

Repair or replace damaged parts as necessary.

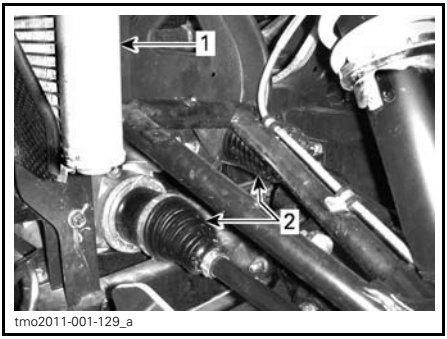

FRONT OF VEHICLE
1. Radiator
2. Inner drive shaft boots

FRONT OF VEHICLE
1. Outer drive shaft boot

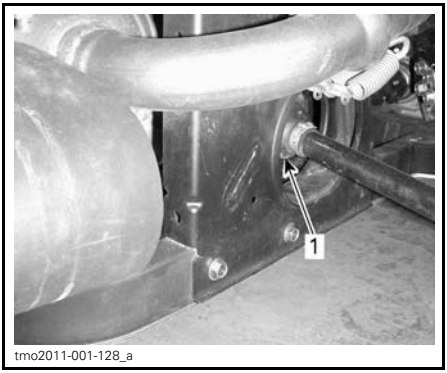

REAR OF VEHICLE
1. Inner drive shaft boot

REAR OF VEHICLE
1. Outer drive shaft boot

Wheel Bearing

Wheel Bearing Inspection

Lift and support vehicle. Refer to *LIFTING AND SUPPORTING THE VEHICLE* in *VEHICLE INFORMATION SECTION*.

Push and pull the wheels from the upper edge to feel the play.

See an authorized Can-Am dealer if there is any play.

TYPICAL

Wheels and Tires

Wheel Removal

Loosen nuts then lift and support vehicle. Refer to *LIFTING AND SUPPORTING VEHICLE* in *VEHICLE INFORMATION*.

Remove nuts then remove wheel.

Wheel Installation

At installation, it is recommended to apply anti-seize lubricant on threads.

The tires are unidirectional and their rotation must be kept in a specific direction for proper operation.

Torque wheel nuts in accordance with the following illustration.

TORQUE	
WHEEL LUG NUTS	100 N•m ± 10 N•m (74 lbf•ft ± 7 lbf•ft)

TIGHTENING SEQUENCE

NOTICE Always use the recommended wheel nuts for the type of wheel. Using a different nut could cause damages to the rim or studs.

Tire Pressure

⚠ WARNING

Tire pressure greatly affects vehicle handling and stability. Under pressure may cause tire to deflate and rotate on wheel. Overpressure may burst the tire. Always follow recommended pressure.

Check pressure when tires are **cold** before using the vehicle. Tire pressure changes with temperature and altitude. Recheck pressure if one of these conditions has changed.

For your convenience, a pressure gauge is supplied in tool kit.

TIRE PRESSURE		
	FRONT	REAR
MIN.	69 kPa (10 PSI)	83 kPa (12 PSI)
MAX. (Use when total load is greater than 180 kg (400 lb))	83 kPa (12 PSI)	152 kPa (22 PSI)

NOTE: Although the tires are specifically designed for off-road use, a flat may still occur. Therefore, it is recommended to carry a tire pump and a repair kit.

Tire Inspection

Check tire for damage and wear. Replace if necessary.

⚠ WARNING

Do not rotate tires. The front and rear tires have a different size. The left and right tires have different unidirectional tread patterns.

Tire Replacement

Tires replacement should be performed by an authorized Can-Am dealer.

⚠ WARNING

- Replace tires only with the same type and size as original tires.
- For unidirectional tread pattern, ensure that the tires are installed in the correct direction of rotation.
- Tires should be replaced, by an experienced person, in accordance with tire industry standards and tools.

Tire Mounting on Beadlock Wheels

X Models

1. Mount the tire on wheel.
   1.1 On the opposite side of beadlock, apply tire mounting lube on inner bead of tire and wheel to ensure proper seat when inflating. Mount the inner bead over the wheel like normal.

   NOTICE Mount tire from beadlock side only.

   1.2 Seat tire outer bead in the shoulder of the beadlock inner ring and center the tire.

TYPICAL
1. *Tire outer bead*
2. *Beadlock inner ring shoulder*

2. Place the beadlock clamp ring on the tire. Align the valve opening with valve.

TYPICAL
1. Clamp ring valve opening

3. Lubricate all beadlock screws with LOCTITE 767 (ANTISEIZE LUBRICANT) (P/N 293 800 070) or an equivalent product to prevent screws sticking.
4. Install all beadlock screws. To avoid cross threading, start all screws by hand.

NOTICE **Do not use an impact wrench for installing beadlock screws. The risk of screw breaking or screw stripping is high when using an impact wrench.**

TYPICAL

5. Tighten beadlock screws as per following specification and sequence.

NOTE: To ensure even pressure on the beadlock clamp ring, tighten screws **a few turns at a time**.

TIGHTENING TORQUE	
Beadlock screws (FIRST TORQUE)	3 N•m ± 1 N•m (27 lbf•**in** ± 9 lbf•**in**)

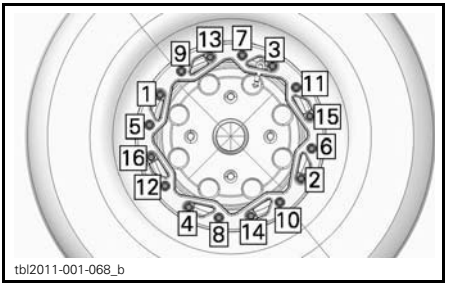

TIGHTENING SEQUENCE

6. At this time check if the tire is still centered on wheel. Reposition it if necessary.
7. Tighten beadlock screws as per the **second** torque using the same sequence.

TIGHTENING TORQUE	
Beadlock screws (SECOND TORQUE)	8 N•m ± 1 N•m (71 lbf•**in** ± 9 lbf•**in**)

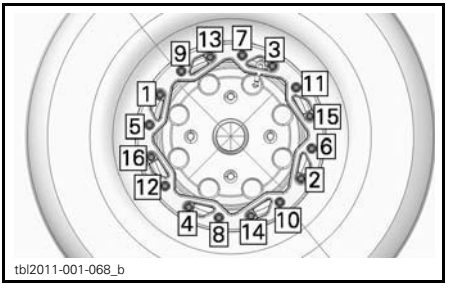

TIGHTENING SEQUENCE

NOTE: The beadlock clamp ring should be in contact with the beadlock inner ring. The beadlock clamp ring can flex slightly to match the tire bead. IT IS NORMAL.

8. Verify the gap between tire and beadlock clamp ring, it should be practically equal all around the ring.

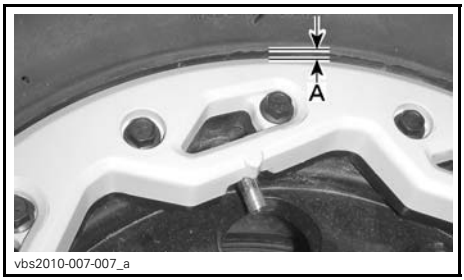

A. Gap equal all around beadlock clamp ring

If the gap is not acceptable,

– Loosen all screws.
– Check tire position on wheel and reposition it if necessary.
– Restart the torquing sequence as detailed.

9. Torque beadlock screws a **final** time following the indicated sequence.

TIGHTENING TORQUE	
Beadlock screws (FINAL TORQUE)	8 N•m ± 1 N•m (71 lbf•**in** ± 9 lbf•**in**)

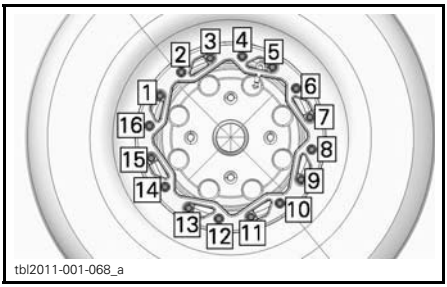

FINAL TIGHTENING SEQUENCE

10. Inflate tire to seat the inner bead on wheel. Always use safe practices, such as a tire safety cage.

⚠ WARNING

Never exceed tire's recommended maximum pressure for seating beads.

Suspensions

Front Suspension Lubrication

Use SUSPENSION GREASE (P/N 293 550 033) or an equivalent.

Lubricate front A-arms.

There are three grease fittings on each A-arm oriented downwards.

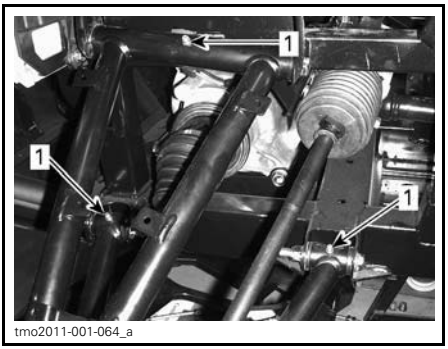

FRONT SUSPENSION - TYPICAL
1. Grease fittings

Suspension Inspection

See an authorized Can-Am dealer if any problem is detected.

Shock Absorbers

Inspect shock absorber for leaks, bump stop wear out or other damages. Verify fasteners are still well tightened.

Front A-Arms

Check A-arms for cracks, bending or other damages.

Rear Trailing Arms

Check trailing arms for distortion, cracks or bending.

ACS Air Filter

ACS Air Filter Access

To access to ACS air filter, remove the following:

– Driver's seat
– LH lateral console panel
– Floor panel.

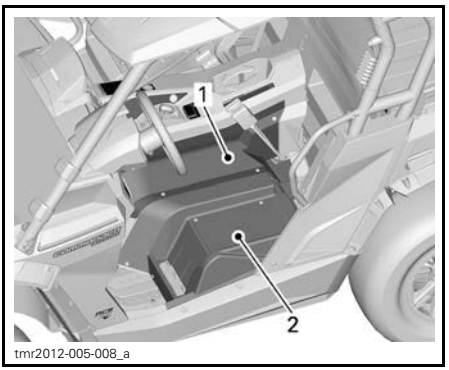

SIDE NET REMOVED FOR CLARITY
1. *LH lateral console panel*
2. *Floor panel*

The ACS compressor is located in front of air reservoirs.

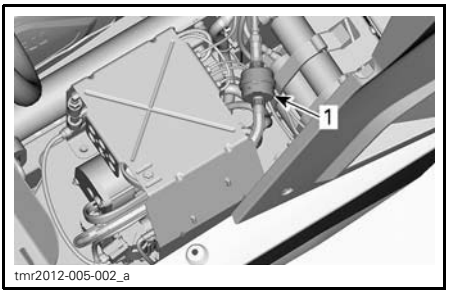

1. *ACS air filter*

ACS Air Filter Replacement

1. Remove and discard clamps securing hoses to air filter.

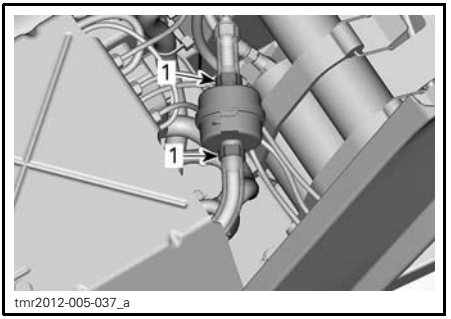

1. *Clamps to be removed*

2. Remove the air filter.
3. Install the new air filter with its attachment towards the compressor.
4. Secure air filter using **new** clamps.

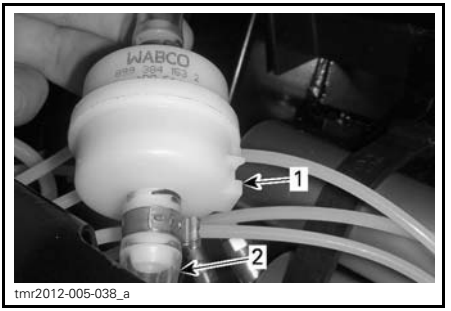

1. *Air filter attachment*
2. *Air hose from compressor*

ACS Hoses and Fittings

ACS Hoses and Fittings Inspection

Check shock hoses for damage.

Check shock fittings for damage.

Check hoses and fittings for air leaks.

Brakes

Brake Fluid Reservoir Level Verification

With vehicle on a level surface, check brake fluid in reservoir for proper level. Brake fluid level should be between MIN.and MAX. marks.

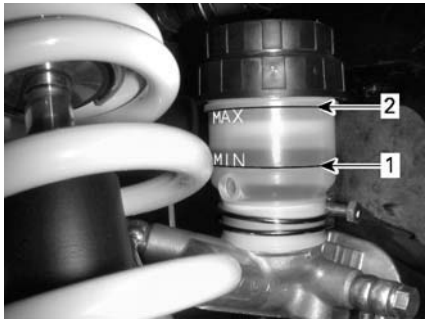

tmo2011-001-083_a

TYPICAL
1. *MIN*
2. *MAX*

NOTE: A low level may indicate leaks or worn brake pads.

Adding Brake Fluid

Clean filler cap before removing.

Add fluid as required. Do not overfill.

NOTE: Ensure filler cap diaphragm is pushed inside before to close the cap on brake fluid reservoir.

Recommended Brake Fluid

Always use brake fluid meeting the specification DOT 4 only.

⚠ WARNING

To avoid serious damage to the braking system, do not use fluids other than the recommended one, nor mix different fluids for topping up.

Brake Inspection

The brake inspection, maintenance and repair should be performed by an authorized Can-Am dealer.

However, verify the following between visits to your dealer:

– Brake fluid level
– Brake system for fluid leaks
– Brake cleanliness.

⚠ WARNING

The brake fluid replacement or brake system maintenance and repairs should be performed by an authorized Can-Am dealer.

Post-Operation Care

When vehicle is used in salt-water environment rinsing the vehicle with fresh water is necessary to preserve vehicle and its components. Metallic parts lubrication is highly recommended. Use XPS LUBE (P/N 293 600 016) or an equivalent. This must be performed at the end of each operating day.

When vehicle is operated in muddy conditions, rinsing the vehicle is recommended to preserve vehicle and its components.

Vehicle Cleaning and Protection

Never use a high pressure washer to clean the vehicle. USE LOW PRESSURE ONLY (like a garden hose). High pressure can cause damage to electrical or mechanical components.

Pay attention to certain areas where mud or debris can accumulate and potentially cause wear, interferences or promote corrosion. The list includes but is not limited to:

- Around exhaust system and between muffler and muffler cover
- Under and around the fuel tank
- Radiator
- Shock absorbers
- Around front and rear differentials
- Around and underneath engine and gearbox
- Inside wheels
- On top of skid plates.

Painted parts which are damaged should be properly repainted to prevent rust.

When required, wash the body with warm water and soap (only use mild detergent). Apply non-abrasive wax.

NOTICE Never clean plastic parts with strong detergent, degreasing agent, paint thinner, acetone, etc.

STORAGE AND PRESEASON PREPARATION

When a vehicle is not in use for more than 4 months, proper storage is a necessity.

When using your vehicle after storage, a preparation is required.

See an authorized Can-Am dealer to have your vehicle prepared for either storage or the preseason.

This page is intentionally blank

TECHNICAL INFORMATION

VEHICLE IDENTIFICATION

The main components of your vehicle (engine and frame) are identified by different serial numbers. It may sometimes become necessary to locate these numbers for warranty purposes or to trace your vehicle in the event of loss. These numbers are required by the authorized Can-Am dealer to complete warranty claims properly. No warranty will be allowed by BRP Inc. if the engine identification number (EIN) or vehicle identification number (VIN) is removed or mutilated in any way. We strongly recommend that you take note of all the serial numbers on your vehicle and supply them to your insurance company.

Vehicle Identification Number

TYPICAL — VEHICLE SERIAL NUMBER LABEL UNDER GLOVE BOX

Engine Identification Number

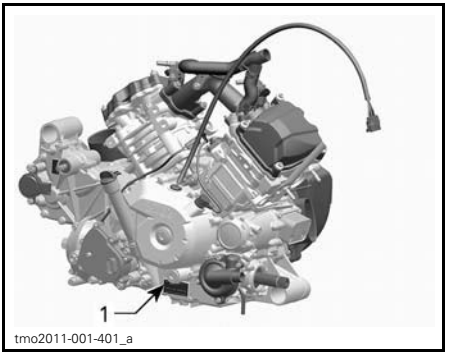

TYPICAL — ENGINE SERIAL NUMBER LABEL

1. EIN (Engine Identification Number)

NOISE EMISSION CONTROL SYSTEM REGULATION

USA and Canada Only

Tampering with Noise Control System Is Prohibited!

U.S. Federal law and Canadian provincial laws may prohibit the following acts or the causing there of:

1. The removal or rendering inoperative by any person other than for purposes of maintenance, repair or replacement of any device or element of design incorporated into any new vehicle for the purpose of noise control prior to its sale or delivery to the ultimate purchaser or while it is in use or
2. The use of the vehicle after such device or element of design has been removed or rendered inoperative by any person.

Among those Acts Presumed to Constitute Tampering Are the Acts Listed Below:

1. Removal or alteration or the puncturing of the muffler or any engine component which conducts removal of engine exhaust gases.
2. Removal or alteration or the puncturing of any part of the intake system.
3. Replacing any moving parts of the vehicle or parts of the exhaust or intake system, with parts other than those specified by the manufacturer.
4. Lack of proper maintenance.

The EC-Declaration of Conformity does not appear in this version of the Operator's Guide.

Please refer to the printed version that was delivered with your vehicle.

SPECIFICATIONS

MODEL		800R	1000
ENGINE			
Engine type		ROTAX® 810	ROTAX® 1010
		4-stroke, Single Over Head Camshaft (SOHC), liquid cooled	
Number of cylinders		2	
Number of valves		8 valves (mechanical adjustment)	
Bore		91 mm (3.58 in)	91 mm (3.58 in)
Stroke		61.5 mm (2.42 in)	75 mm (2.95 in)
Displacement		799.9 cm^3 (48.81 in^3)	976 cm^3 (59.56 in^3)
Exhaust system		Spark arrester approved by USDA Forest Service	
Engine air filter		Synthetic paper filter	
LUBRICATION SYSTEM			
Type		Wet sump. Replaceable oil filter	
Oil filter		BRP Rotax® paper type, replaceable	
Engine oil	Capacity (oil change with filter)	2.2 L (2.3 qt (U.S. liq.))	
	Recommended	For the summer season, use XPS 4-STROKE SYNTH. BLEND OIL (SUMMER) (P/N 293 600 121). For the winter season, use XPS 4-STROKE SYNTHETIC OIL (ALL CLIMATE) (P/N 293 600 112). If not not available, use a 5W 40 motor oil that meets the requirements for API service classification SM, SL or SJ	
COOLING SYSTEM			
Coolant	Type	Ethyl glycol/water mix (50% coolant, 50% water). Use premixed coolant sold by BRP (P/N 219 700 362) or coolant specifically designed for aluminum engines	
	Capacity	3.85 L (1.02 U.S. gal.)	4.25 L (1.12 U.S. gal.)
CVT TRANSMISSION			
Type		CVT (Continuously Variable Transmission)	
Engagement RPM		1800 RPM	

MODEL		800R	1000
GEARBOX			
Type		Dual range (HI-LO) with PARK, neutral and reverse	
Gearbox oil	Capacity	450 ml (15 U.S. oz)	
	Recommended	XPS synthetic gear oil (P/N 293 600 140) or a 75W 140 API GL-5	
ELECTRICAL SYSTEM			
Magneto generator output		625 W @ 6000 RPM	
Ignition system type		IDI (Inductive Discharge Ignition)	
Ignition timing		Not adjustable	
Spark plug	Quantity	2	
	Make and type	NGK DCPR8E	
	Gap	0.7 mm to 0.8 mm (.028 in to .031 in)	
Engine RPM limiter setting		8000 RPM	
Battery	Type	Dry battery type	
	Voltage	12 volts	
	Nominal rating	18 A•h	
	Power starter output	0.7 KW	
Headlights		4 x 60 W	
Taillight		2 x 8/26 W	

MODEL			800R	1000
ELECTRICAL SYSTEM (cont'd)				
Fuses		Main	40 A	
		Accessories (main)	50 A	
		ACS/DPS	50 A	
		Speedometer/tail lamp	10 A	
		Ignition/injection/speed sensor	7.5 A	
		Engine control module (ECM)	5 A	
		4WD Actuator (winch if equipped)	5 A	
		Key switch	5 A	
		Fan (fuse breaker)	25 A	
		European component	5 A	
		Head lamp	30 A	
		DC Outlet	15 A	
		Relay Driver	5 A	
		Accessories	15 A	
		Fuel pump	5 A	
FUEL SYSTEM				
Fuel delivery		Type	Electronic fuel injection (EFI) with iTC	
Throttle body			54 mm with ETA	
Fuel pump		Type	Electric (in fuel tank)	
Idle speed			1250 ± 100 RPM (not adjustable)	
Fuel	Type		Regular unleaded gasoline (which may contain up to 10% MAX ethanol)	
	Minimum octane	Inside North America	87 (R+M)/2 or higher	
		Outside North America	92 RON or higher	
Fuel tank capacity			37.8 L (10 U.S. gal.)	
Fuel remaining when low fuel light turns ON			± 12 L (3.2 U.S. gal.)	

MODEL			800R	1000
DRIVE SYSTEM				
Drive system type			Selectable 2WD/4WD	
Front Differential oil/rear final drive oil	Capacity	Front	500 ml (17 U.S. oz)	
		Rear	350 ml (11.8 U.S. oz)	
	Type	Front	XPS Synthetic gear oil (75W 90 API GL-5) (P/N 293 600 043) or synthetic oil 75W 90 API GL5	
		Rear	XPS Synthetic gear oil (P/N 293 600 140) or a 75W 140 API GL-5 synthetic gear oil	
Front drive			Visco-lok† front differential	
Front drive ratio			3.6:1	
Rear drive			Shaft driven/single differential	
Rear drive ratio			3.6:1	
CV joint grease			CV joint grease (P/N 293 550 019)	
STEERING				
Steering wheel			Adjustable tilt steering	
Turning radius			240 cm (94.5 in)	
Total toe (vehicle on ground)			0° ± 0.2° (±)	
Camber angle (vehicle on ground)			0.7° positive	
FRONT SUSPENSION				
Suspension type		Base DPS X XT	Double suspension-arm with dive-control geometry	
		LTD	Double suspension-arm with dive-control geometry with ACS	
Suspension travel			254 mm (10 in)	
Shock absorber	Qty		2	
	Type	Base	Oil/5 spring preload settings	
		DPS	Oil/5 spring preload settings	
		X	HPG shock with remote reservoir. Dual speed compression damping and rebound damping adjustments	
		XT	Oil/5 spring preload settings	
		LTD	HPG shock with remote reservoir. Compression damping (low speed) and air pressure adjustments	

MODEL			800R	1000
REAR SUSPENSION				
Suspension type		Base DPS X XT	Torsional Trailing arm Independant (TTI) with external sway bar	
		LTD	Torsional Trailing arm Independant (TTI) with external sway bar with ACS	
Suspension travel			254 mm (10 in)	
Shock absorber	Qty		2	
	Type	Base	Oil/5 spring preload settings	
		DPS	Oil/5 spring preload settings	
		X	HPG shock with remote reservoir. Dual speed compression damping and rebound damping adjustments	
		XT	Oil/5 spring preload settings	
		LTD	HPG shock with remote reservoir. Compression damping (low speed) and air pressure adjustments	
BRAKES				
Front brake	Type		Dual 214mm ventilated disc brakes with hydraulic twin-piston calipers	
Rear brake	Type		Single 214mm ventilated disc brake with hydraulic twin-piston caliper	
Brake fluid	Capacity		125 ml (4.2 U.S. oz)	
	Type		DOT 4	
Caliper			Floating	
Brake pad material	Front		Metallic	
	Rear		Metallic	
Minimum bake pad thickness			1 mm (.039 in)	
Minimum brake disc thickness	Front		4.1 mm (.161 in)	
	Rear		4.1 mm (.161 in)	
Maximum brake disc warpage			0.2 mm (.001 ft)	

MODEL			800R	1000
TIRES				
Pressure	Front		Maximum: 83 kPa (12 PSI) Minimum: 69 kPa (10 PSI)	
	Rear		Maximum: 152 kPa (22 PSI) Minimum: 83 kPa (12 PSI)	
Minimum tire thread depth			3 mm (.118 in)	
Tire size	Front	Base	27 x 9 x 12 (in)	
		X	27 x 9 x 12 (in)	
		DPS/XT/LTD	27 x 9 x 14 (in)	
	Rear	Base	27 x 11 x 12 (in)	
		X	27 x 11 x 12 (in)	
		DPS/XT/LTD	27 x 11 x 14 (in)	
WHEELS				
Type		Base	Steel	
		X	Aluminum beadlock wheels	
		DPS/XT/LTD	Cast Aluminum	
Rim size	Front	Base	12 x 6 (in)	
		X	12 x 6 (in)	
		DPS/XT/LTD	14 x 7 (in)	
	Rear	Base	12 x 8 (in)	
		X	12 x 7.5 (in)	
		DPS/XT/LTD	14 x 8.5 (in)	
Wheel nuts torque			100 N•m ± 10 N•m (74 lbf•ft ± 7 lbf•ft)	
CHASSIS				
Cage type			50 mm (2 in) diameter, high strength steel, ROPS-approved cage	
DIMENSIONS				
Overall length			300.4 cm (118.3 in)	
Overall width			148.9 cm (58.6 in)	
Overall height			182.9 cm (72 in)	
Wheelbase			192.4 cm (75.7 in)	
Wheel track	Front		125.7 cm (49.5 in)	
	Rear		121.9 cm (48 in)	
Ground clearance			27.9 cm (11 in)	

MODEL			800R	1000
LOADING CAPACITY AND WEIGHT				
Dry weight			584 kg (1,287 lb)	587 kg (1,295 lb)
Weight distribution (front/rear)			44/56	
Cargo box capacity		Total	272 kg (600 lb)	
		Upper	181 kg (400 lb)	
		Lower	272 kg (600 lb)	
Total vehicle load allowed (including driver, passenger, all other loads and added accessories)			363 kg (800 lb)	
Gross vehicle weight rating			990 kg (2,183 lb)	
Towing capacity	Hitch support	50.8 mm (2 in) x 50.8 mm (2 in)	680 kg (1,500 lb)	
	Hitch support	38.1 mm (1.5 in) x 38.1 mm (1.5 in)	400 kg (880 lb)	

This page is intentionally blank

TROUBLESHOOTING

TROUBLESHOOTING GUIDELINES

CVT BELT IS SLIPPING

1. Water has entered in the CVT.
   – *Refer to SPECIAL PROCEDURES subsection.*

E IS DISPLAYED ON TRANSMISSION POSITION DISPLAY

1. Shift lever is between 2 positions.
   – *Properly position the shift lever in the desired position.*
2. Shift lever is not properly adjusted.
   – *Contact an authorized Can-Am dealer.*
3. Electrical communication error.
   – *Contact an authorized Can-Am dealer.*

ENGINE DOES NOT TURN

1. Ignition switch is in the OFF position.
   – *Place switch to either ON position.*
2. Shift lever is not set on PARK or NEUTRAL.
   – *Set shift lever to either in PARK or in NEUTRAL or press the brake pedal.*
3. Burnt fuse.
   – *Check fuses.*
4. Weak battery or loose connections.
   – *Check charging system fuse.*
   – *Check fault message in cluster.*
   – *Check battery connections and terminals condition.*
   – *Have the battery checked by an authorized Can-Am dealer.*
5. Defective engine start button.
   – *Contact an authorized Can-Am dealer.*
6. Defective starter solenoid.
   – *Contact an authorized Can-Am dealer.*

ENGINE TURNS OVER BUT FAILS TO START

1. Flooded engine (spark plug wet when removed).
   – *(If the engine does not start and it is fuel-flooded, the drowned mode can be activated to prevent fuel injection and to cut ignition while cranking. Proceed as follows:*
   • Insert key in ignition switch and turn to either ON position.
   • Press completely and HOLD accelerator pedal.
   • Press the engine START button.
   The engine should be cranked for 10 seconds. Release engine START button.
   Release accelerator pedal and start/crank engine again to allow starting.
   If it does not work:
   • Remove the spark plugs (tools are supplied in tool kit). Refer to SPARK PLUGS in the MAINTENANCE PROCEDURES section.
   • Crank engine several times.
   • Install new spark plugs if possible or clean and dry spark plugs.
   • If engine does not start, see an authorized Can-Am dealer.

2. No fuel to the engine (spark plug dry when removed).
   – *Check fuel tank level.*
   – *Check fuel pump fuse.*
   – *Obstructed fuel pump pre-filter or fuel pump failure. See an authorized Can-Am dealer.*
3. Spark plug/ignition (no spark).
   – *Check ignition fuse.*
   – *Remove spark plug then reconnect to ignition coil.*
   – *Start engine with spark plug grounded to the engine away from spark plug hole. If no spark appears, replace spark plug.*
   – *If trouble persists, contact an authorized Can-Am dealer.*

ENGINE LACKS ACCELERATION OR POWER

1. Seat belt not buckled properly. Check cluster message.
   – *Buckle up seat belt.*
2. Fouled or damaged spark plug.
   – *Replace spark plugs.*
3. Engine air filter plugged or dirty.
   – *Check air filter and replace if necessary.*
   – *Check deposits in engine air filter housing.*
4. Water in CVT
   – *Drain water from CVT. Refer to SPECIAL PROCEDURES subsection.*
5. CVT dirty or worn-out.
   – *Contact an authorized Can-Am dealer.*
6. Lack of fuel
   – *Dirty or clogged fuel pump pre-filter. See an authorized Can-Am dealer.*

ENGINE LACKS ACCELERATION OR POWER (cont'd)

7. Engine is in limp home mode.
   - *Check multifunction gauge display for messages.*
   - *Multifunction gauge CHECK ENGINE indicator lamp is on and display shows LIMP HOME, contact an authorized Can-Am dealer.*

ENGINE OVERHEATS

1. Low coolant level in cooling system.
   - *Check coolant level and refill. See MAINTENANCE PROCEDURES. See an authorized Can-Am dealer as soon as possible.*
2. Cooling fan is not working.
   - *Ensure cooling fan is not jammed and working properly.*
   - *Check fan fuse. See FUSES in the MAINTENANCE PROCEDURES subsection.*
3. Dirty radiators fins.
   - *Check and clean radiator fins. See MAINTENANCE PROCEDURES subsection.*

ENGINE MISFIRE

1. Fouled/damaged/worn spark plug.
   - *Replace spark plugs as required.*
2. Water in fuel.
   - *Drain fuel system and refill with fresh fuel.*

THE RPM INCREASES BUT THE VEHICLE DOES NOT MOVE

1. Water in the CVT.
   - *Drain water from CVT. See SPECIAL PROCEDURES subsection.*
2. CVT dirty or worn-out or belt failure.
   - *Contact an authorized Can-Am dealer.*

PARTIAL OR NO RESPONSE FROM THE ACCELERATOR PEDAL INPUTS (CHECK ENGINE IS ON AND PPS FAULT MESSAGE IS DISPLAYED)

1. Partial failure of the accelerator pedal sensors (PPS).
   - *Use the override switch to retrieve accelerator pedal normal operation. Contact an authorized Can-Am dealer.*
2. Total failure of the accelerator pedal sensors (PPS).
   - *Use the override switch to bypass the accelerator pedal in order to move vehicle. Contact an authorized Can-Am dealer.*

ACS OVERHEAT IS DISPLAYED IN GAUGE

1. ACS compressor was used too much over a short period of time.
   - *Wait for overheat message* ACS OVERHEAT *to disappear from display.*
   - *If message does not disappear, contact an authorized Can-Am dealer.*

ACS FAULT IS DISPLAYED IN GAUGE

1. A leak or problem in the ACS system is detected.
   – *Contact an autorized Can Am dealer.*

MESSAGES IN MULTIFUNCTION GAUGE

If an abnormal engine condition occurs, the following messages can be combined with a pilot lamp.

MESSAGE	DESCRIPTION
CHECK ENGINE	All active or previously activated faults that require attention. No engine limitation engaged.
LIMP HOME	Critical faults requiring diagnostic as soon as possible. An engine limitation is engaged and/or the engine behavior is modified.
ECM CRC ERROR	Error message from ECM.
TPS FAULT	Throttle body fault, generally followed by a Limp Home message.
BRAKE SWITCH FAULT	Brake signal fault.
ECM NOT RECOGNIZED	Message displayed when the gauge is unable to identify the ECM.
CHECK DPS	Check engine pilot light on. Indicates that the DPS (Dynamic Power Steering) does not work properly. See an authorized Can-Am dealer.
TRANSMISSION SIGNAL FAULT	Gearbox position sensor fault active. «E» is also displayed in the gear display.
PPS FAULT	When one or both sensor of the PPS is/are faulty, erratic or out of range or that the ratio between the two is incorrect, the message will be displayed and the check engine will be lit.
MANUAL LIMP HOME	When the PPS Limp Home is engaged, the message will be displayed.
FUEL SENDER RANGE PERFORMANCE	When the fuel sender resistor value is out of range the multifunction gauge (analog/digital) will detect it and display the message.
GEAR POSITION SENSOR FAULT	When the Gear signal is erroneous the gauge will display the message.
ACS FAULT	Leak or problem detected in the ACS system.
ACS OVERHEAT	ACS compressor overheated. Do not run compressor for more than 2 minutes. Let compressor cool down.

WARRANTY

BRP LIMITED WARRANTY USA AND CANADA: 2013 CAN-AM® SSV

1) SCOPE OF THE LIMITED WARRANTY

Bombardier Recreational Products Inc. ("BRP")* warrants its 2013 Can-Am side-by-side vehicles (SSV) sold by authorized Can-Am SSV dealers (as hereinafter defined) in the fifty United States and Canada from defects in material or workmanship for the period and under the conditions described below. This limited warranty will become null and void if: (1) the SSV was used for racing or any other competitive activity, at any point, even by a previous owner; or (2) the SSV has been altered or modified in such a way so as to adversely affect its operation, performance or durability, or has been altered or modified to change its intended use.

Except if otherwise specified, all genuine Can-Am SSV parts and accessories, installed by an authorized BRP dealer at the time of delivery of the 2013 Can-Am SSV, carry the same warranty as that of the Can-Am SSV.

2) LIMITATIONS OF LIABILITY

THIS WARRANTY IS EXPRESSLY GIVEN AND ACCEPTED IN LIEU OF ANY AND ALL OTHER WARRANTIES, EXPRESSED OR IMPLIED, INCLUDING WITHOUT LIMITATION ANY WARRANTY OF MERCHANTABILITY OR FITNESS FOR A PARTICULAR PURPOSE. TO THE EXTENT THAT THEY CANNOT BE DISCLAIMED, THE IMPLIED WARRANTIES ARE LIMITED IN DURATION TO THE LIFE OF THE EXPRESS WARRANTY. INCIDENTAL AND CONSEQUENTIAL DAMAGES ARE EXCLUDED FROM COVERAGE UNDER THIS WARRANTY. SOME STATES/ PROVINCES DO NOT ALLOW FOR THE DISCLAIMERS, LIMITATIONS AND EXCLUSIONS IDENTIFIED ABOVE, AS A RESULT, THEY MAY NOT APPLY TO YOU. THIS WARRANTY GIVES YOU SPECIFIC RIGHTS, AND YOU MAY ALSO HAVE OTHER LEGAL RIGHTS WHICH MAY VARY FROM STATE TO STATE, OR PROVINCE TO PROVINCE.

Neither the distributor, any BRP dealer nor any other person has been authorized to make any affirmation, representation or warranty regarding the product, other than those contained in this limited warranty, and if made, shall not be enforceable against BRP. BRP reserves the right to modify this warranty at any time, being understood that such modification will not alter the warranty conditions applicable to the products sold while this warranty is in effect.

3) EXCLUSIONS – ARE NOT WARRANTED

The following are not warranted under any circumstances:

- Normal wear and tear;
- Routine maintenance items, tune ups, adjustments;
- Damage caused by failure to provide proper maintenance and/or storage, as described in the Operator's Guide;
- Damage resulting from removal of parts, improper repairs, service, maintenance, modifications or use of parts not manufactured or approved by BRP or resulting from repairs done by a person that is not an authorized servicing Can-Am SSV dealer;
- Damage caused by abuse, abnormal use, neglect or operation of the product in a manner inconsistent with the recommended operation described in the Can-Am SSV Operator's Guide;

– Damage resulting from accident, submersion, fire, theft, vandalism or any act of God;
– Operation with fuels, oils or lubricants which are not suitable for use with the product (see the Operator's Guide);
– Damages from rust, corrosion or exposure to the elements;
– Damage resulting from water or snow ingestion;
– Incidental or consequential damages, or damages of any kind including without limitation towing, storage, telephone, rental, taxi, inconvenience, insurance coverage, loan payments, loss of time, loss of income.

4) WARRANTY COVERAGE PERIOD

This warranty will be in effect from (1) the date of delivery to the first retail consumer or (2) the date the product is first put into use, whichever occurs first and for the following period:

– SIX (6) CONSECUTIVE MONTHS, for private use or commercial use owners, except that emission-related components installed on EPA certified SSVs registered in the USA are covered for 5000 km or thirty (30) consecutive months whichever comes first; and evaporative emission related components are warranted for twenty-four (24) consecutive months. To obtain a list of the current warranted emission-related components, please see an authorized Can-Am SSV dealer.

The repair or replacement of parts or the performance of service under this warranty does not extend the life of this warranty beyond its original expiration date.

5) CONDITIONS TO HAVE WARRANTY COVERAGE

This warranty coverage is available **only** if **each** of the following conditions has been fulfilled:

– The 2013 Can-Am SSV must be purchased as new and unused by its first owner from a Can-Am SSV dealer authorized to distribute Can-Am SSV's in the country in which the sale occurred ("Can-Am SSV dealer");
– The BRP specified pre-delivery inspection process must be completed and documented and signed by the purchaser;
– The 2013 Can-Am SSV must have undergone proper registration by an authorized Can-Am SSV dealer;
– The 2013 Can-Am SSV must be purchased in the country in which the purchaser resides;
– Routine maintenance outlined in the Operator's Guide must be timely performed in order to maintain warranty coverage. BRP reserves the right to make warranty coverage contingent upon proof of proper maintenance.

BRP will not honor this limited warranty to any private use owner or commercial use owner if one of the preceding conditions has not been met. Such limitations are necessary in order to allow BRP to preserve both the safety of its products, and also that of its consumers and the general public.

6) WHAT TO DO TO OBTAIN WARRANTY COVERAGE

The customer must cease using the SSV upon the appearance of an anomaly. The customer must notify a servicing BRP dealer within three (3) days of the appearance of a defect, and provide it with reasonable access to the product and

reasonable opportunity to repair it. The customer must also present to the authorized BRP dealer, proof of purchase of the product and must sign the repair/work order prior to starting the repair in order to validate the warranty repair. All parts replaced under this limited warranty become the property of BRP.

7) WHAT BRP WILL DO

BRP's obligations under this warranty are limited to, at its sole discretion, repairing parts found defective under normal use, maintenance and service, or replacing such parts with new genuine Can-Am SSV parts without charge for parts and labor, at any authorized BRP dealer during the warranty coverage period under the conditions described herein. BRP's responsibility is limited to making the required repairs or replacements of parts. No claim of breach of warranty shall be cause for cancellation or rescission of the sale of the SSV to the owner.

In the event that service is required outside of the country of original sale, the owner will bear responsibility for any additional charges due to local practices and conditions, such as, but not limited to, freight, insurance, taxes, license fees, import duties, and any and all other financial charges, including those levied by governments, states, territories and their respective agencies.

BRP reserves the right to improve or modify products from time to time without assuming any obligation to modify products previously manufactured.

8) SUPPLIER WARRANTIES

A GPS receiver may be supplied by BRP as standard equipment on certain 2013 Can-Am SSV. The GPS receiver is covered by the limited warranty issued by the GPS receiver's manufacturer and is not covered by this limited warranty. Please contact the following distributors if in Canada or the manufacturer if in the USA:

In the USA:
Garmin International Inc.
U.S.: 913 397-8200
U.S. Toll Free: 1 800 800-1020

Website: www.garmin.com

In Canada (one or the other):
Raytech Électronique
Tel.: 450 975-1015
Fax: 800 975-0025/450 975-0817
Contact: raytech@raytech.qc.ca
Web Site: www.raytech.qc.ca
Coord. GPS: N45o35.25' - W73o42.95'

Naviclub Ltd
Tel.: 418 835-9279
Fax: 418 835-6681
Contact: naviclub@naviclub.com
Web Site: www.naviclub.com

Your 2013 Can-Am SSV could be originally equipped with Carlisle† branded SSV tires. The tires are warranted separately by the tire manufacturer and are not covered by this limited warranty. Please contact the manufacturer or ask your authorized Can-Am SSV dealer for assistance.

Carlisle Tire & Wheel Company
23 Windham Boulevard
Aiken SC 29805
Warranty Information:
USA: 1 800 260-7959
Canada: 1 800 265-6155
Quebec: 1 877 997-4999

9) TRANSFER

If the ownership of a product is transferred during the warranty coverage period, this warranty shall also be transferred and be valid for the remaining coverage period provided that BRP is notified of such transfer of ownership in the following way:

1. The former owner contacts BRP (at the phone number provided below) or an authorized BRP dealer and gives the coordinates of the new owner; or
2. BRP or an authorized BRP dealer receives a proof that the former owner agreed to the transfer of ownership, in addition to the coordinates of the new owner.

10) CONSUMER ASSISTANCE

In the event of a controversy or a dispute in connection with this limited warranty, BRP suggests that you try to resolve the issue at the dealership level. We recommend discussing the issue with the authorized dealer's service manager or owner.

If the issue has not yet been resolved, please submit your complaint in writing or call the appropriate number below:

IN CANADA:

BOMBARDIER RECREATIONAL PRODUCTS INC.
CAN-AM SSV
CUSTOMER ASSISTANCE CENTER
75 J.-A. Bombardier Street
Sherbrooke, QC J1L 1W3
Tel.: 819 566-3366

IN USA:

BRP US Inc.
CAN-AM SSV
CUSTOMER ASSISTANCE CENTER
7575 Bombardier Court
Wausau WI 54401
Tel.: 715 848-4957

* In the USA, products are distributed and serviced by BRP US Inc.
© 2011 Bombardier Recreational Products Inc. All rights reserved.
™ Trademark of Bombardier Recreational Products Inc. or its affiliates.
† Carlisle is a trademark owned by or licensed to Carlisle Tire & Wheel Company.

BRP INTERNATIONAL LIMITED WARRANTY: 2013 CAN-AM® SSV

1) SCOPE OF THE LIMITED WARRANTY

Bombardier Recreational Products Inc. (“BRP”)* warrants its 2013 Can-Am SSV sold by Can-Am SSV distributors or dealers authorized by BRP to distribute Can-Am SSVs ("Can-Am SSV Distributor/Dealer") outside of the fifty United States, Canada and states that are members of the European Economic Area ("EEA") (which is comprised of the states members of the European Union plus Norway, Iceland and Liechtenstein) from defects in material or workmanship for the period and under the conditions described below.

All genuine Can-Am SSV parts and accessories, installed by an authorized Can-Am SSV Distributor/Dealer at the time of delivery of the 2013 Can-Am SSV, carry the same warranty as that of the Can-Am SSV.

This limited warranty will become null and void if: (1) The SSV was used for racing or any other competitive activity, at any point, even by a previous owner; or (2) the SSV has been altered or modified in such a way so as to adversely affect its operation, performance or durability, or has been altered or modified to change its intended use.

2) LIMITATIONS OF LIABILITY

TO THE EXTENT PERMITTED BY LAW, THIS WARRANTY IS EXPRESSLY GIVEN AND ACCEPTED IN LIEU OF ANY AND ALL OTHER WARRANTIES, EXPRESSED OR IMPLIED, INCLUDING WITHOUT LIMITATION ANY WARRANTY OF MERCHANTABILITY OR FITNESS FOR A PARTICULAR PURPOSE. TO THE EXTENT THAT THEY CANNOT BE DISCLAIMED, THE IMPLIED WARRANTIES ARE LIMITED IN DURATION TO THE LIFE OF THE EXPRESS WARRANTY. INCIDENTAL AND CONSEQUENTIAL DAMAGES ARE EXCLUDED FROM COVERAGE UNDER THIS WARRANTY. SOME JURISDICTIONS DO NOT ALLOW FOR THE DISCLAIMERS, LIMITATIONS AND EXCLUSIONS IDENTIFIED ABOVE, AS A RESULT, THEY MAY NOT APPLY TO YOU. THIS WARRANTY GIVES YOU SPECIFIC RIGHTS, AND YOU MAY ALSO HAVE OTHER LEGAL RIGHTS WHICH MAY VARY FROM COUNTRY TO COUNTRY. (FOR PRODUCTS PURCHASED IN AUSTRALIA SEE CLAUSE 4 BELOW).

Neither the Can-Am SSV Distributor/Dealer nor any other person has been authorized to make any affirmation, representation or warranty regarding the product, other than those contained in this limited warranty, and if made, shall not be enforceable against BRP.

BRP reserves the right to modify this warranty at any time, being understood that such modification will not alter the warranty conditions applicable to the products sold while this warranty is in effect.

3) EXCLUSIONS ARE NOT WARRANTED

The following are not warranted under this limited warranty under any circumstances:

- Normal wear and tear;
- Routine maintenance items, tune ups, adjustments (parts and labor);
- Damage caused by negligence or failure to provide proper maintenance and/or storage, as described in the Operator's Guide;

– Damage resulting from removal of parts, improper repairs, service, maintenance, modifications or use of parts not manufactured or approved by BRP or resulting from repairs done by a person that is not an authorized servicing Can-Am SSV Distributor/Dealer;
– Damage caused by abuse, abnormal use, neglect or operation of the product in a manner inconsistent with the recommended operation described in the Operator's Guide;
– Damage resulting from accident, submersion, fire, theft, vandalism or any act of God;
– Operation with fuels, oils or lubricants which are not suitable for use with the product (see the Operator's Guide);
– Damage resulting from rust, corrosion or exposure to the elements;
– Damage resulting from water or snow ingestion;
– Incidental or consequential damages, or damages of any kind including without limitation towing, transportation expenses, storage, telephone, rental, taxi, inconvenience, insurance coverage, loan payments, loss of time, loss of income or time missed for downtime experience due to service work.

4) WARRANTY COVERAGE PERIOD

This warranty will be in effect from (1) the date of delivery to the first retail consumer or (2) the date the product is first put into use, whichever occurs first and for a period of:

– SIX (6) CONSECUTIVE MONTHS for private use or commercial use.

The repair or replacement of parts or the performance of service under this warranty does not extend the life of this warranty beyond its original expiration date.

FOR PRODUCTS SOLD IN AUSTRALIA ONLY

Nothing in these Warranty terms and conditions should be taken to exclude, restrict or modify the application of any condition, warranty, guarantee, right or remedy conferred or implied under the Competition and Consumer Act 2010 (Cth), including the Australian Consumer Law or any other law, where to do so would contravene that law, or cause any part of these terms and conditions to be void. The benefits given to you under this limited warranty hereto are in addition to other rights and remedies that you have under Australian law.

Our goods come with guarantees that cannot be excluded under the Australian Consumer Law. You are entitled to a replacement or refund for a major failure and for compensation for any other reasonably foreseeable loss or damage. You are also entitled to have the goods repaired or replaced if the goods fail to be of acceptable quality and the failure does not amount to a major failure.

5) CONDITIONS TO HAVE WARRANTY COVERAGE

This warranty coverage is available **only** if **each** of the following conditions has been fulfilled:

– The 2013 Can-Am SSV must be purchased as new and unused by its first owner from a Can-Am SSV Distributor/Dealer authorized to distribute Can-Am SSVs in the country in which the sale occurred;
– The BRP specified pre-delivery inspection process must be completed and documented;

– The product must have undergone proper registration by an authorized Can-Am SSV Distributor/Dealer;
– The 2013 Can-Am SSV must be purchased in the country or union of countries in which the purchaser resides; and
– Routine maintenance outlined in the Operator's Guide must be timely performed in order to maintain warranty coverage. BRP reserves the right to make warranty coverage contingent upon proof of proper maintenance.

BRP will not honor this limited warranty to any private use owner or commercial use owner if one of the preceding conditions has not been met. Such limitations are necessary in order to allow BRP to preserve both the safety of its products, and also that of its consumers and the general public.

6) WHAT TO DO TO OBTAIN WARRANTY COVERAGE UNDER THIS WARRANTY

The customer must cease using the SSV upon the appearance of an anomaly. The customer must notify a servicing Can-Am SSV Distributor/Dealer within two (2) days of the appearance of a defect, and provide it with reasonable access to the product and reasonable opportunity to repair it. The customer must also present to the authorized Can-Am SSV Distributor/Dealer proof of purchase of the product and must sign the repair/work order prior to starting the repair in order to validate the warranty repair. All parts replaced under this limited warranty become the property of BRP.

Note that the notification period is subject to the applicable national or local legislation in customer's country.

7) WHAT BRP WILL DO

To the extent permitted by law, BRP's obligations under this warranty are limited to, at its sole discretion, repairing parts found defective under normal use, maintenance and service; or replacing such parts with new genuine Can-Am SSV parts without charge for parts and labour, at any authorized Can-Am SSV Distributor/Dealer during the warranty coverage period under the conditions described herein. BRP's responsibility is limited to making the required repairs or replacements of parts. No claim of breach of warranty shall be cause for cancellation or rescission of the sale of the Can-Am SSV to the owner. You may have other legal rights which may vary from country to country.

In the event that service is required outside of the country of original sale, the owner will bear responsibility for any additional charges due to local practices and conditions, such as, but not limited to, freight, insurance, taxes, license fees, import duties, and any and all other financial charges, including those levied by governments, states, territories and their respective agencies.

BRP reserves the right to improve or modify products from time to time without assuming any obligation to modify products previously manufactured.

8) TRANSFER

If the ownership of a product is transferred during the warranty coverage period, this limited warranty, subject to its terms and conditions, shall also be transferred and be valid for the remaining coverage period provided BRP or an authorized Can-Am SSV Distributor/Dealer receives a proof that the former owner agreed to the transfer of ownership, in addition to the coordinates of the new owner.

9) CONSUMER ASSISTANCE

1. In the event of a controversy or a dispute in connection with this limited warranty, BRP suggests that you try to resolve the issue at the Can-Am SSV Dealer level. We recommend discussing the issue with the authorized Can-Am SSV Distributor/Dealer's service manager or owner.
2. If further assistance is required, the Can-Am SSV Distributor/Dealer service department should be contacted in order to resolve the matter.
3. If the matter still remains unresolved then contact BRP by writing to us at the address listed below.

For countries within Middle East, Africa, Turkey and Russia please contact our European office:

BRP EUROPE N.V.
Customer Assistance Center
Skaldenstraat 125
9042 Gent
Belgium
Tel.: + 32-9-218-26-00

For all other countries, please contact your local Can-Am SSV Distributor/Dealer (visit our website at www.brp.com for contact information), or contact our North America office at:

BOMBARDIER RECREATIONAL PRODUCTS INC.
Customer Assistance Center
75, J.-A. Bombardier Street
Sherbrooke, Québec J1L 1W3
Tel.: 1 819 566-3366

* For the territory covered by this limited warranty, products are distributed and serviced by Bombardier Recreational Products Inc. or its affiliates.

© 2012 Bombardier Recreational Products Inc. All rights reserved.
™ Trademark of Bombardier Recreational Products Inc. or its affiliates.

BRP LIMITED WARRANTY FOR THE EUROPEAN ECONOMIC AREA: 2013 CAN-AM® SSV

1) SCOPE OF THE LIMITED WARRANTY

Bombardier Recreational Products Inc. (“BRP”)* warrants its 2013 Can-Am SSVs sold by Can-Am SSV distributors or dealers authorized by BRP to distribute Can-Am SSVs ("Can-Am SSV Distributor/Dealer") in states members of the European Economic Area, ("EEA") (which is comprised of the states member of the European Union plus Norway, Iceland and Liechtenstein), from defects in material or workmanship for the period and under the conditions described below.

All genuine Can-Am SSV parts and accessories, installed by an authorized Can-Am SSV Distributor/Dealer at the time of delivery of the 2013 Can-Am SSV, carry the same warranty as that of the SSV.

This limited warranty will become null and void if: (1) The SSV was used for racing or any other competitive activity, at any point, even by a previous owner; or (2) the SSV has been altered or modified in such a way so as to adversely affect its operation, performance or durability, or has been altered or modified to change its intended use.

2) LIMITATIONS OF LIABILITY

TO THE EXTENT PERMITTED BY LAW, THIS WARRANTY IS EXPRESSLY GIVEN AND ACCEPTED IN LIEU OF ANY AND ALL OTHER WARRANTIES, EXPRESSED OR IMPLIED, INCLUDING WITHOUT LIMITATION ANY WARRANTY OF MERCHANTABILITY OR FITNESS FOR A PARTICULAR PURPOSE. TO THE EXTENT THAT THEY CANNOT BE DISCLAIMED, THE IMPLIED WARRANTIES ARE LIMITED IN DURATION TO THE LIFE OF THE EXPRESS WARRANTY. INCIDENTAL AND CONSEQUENTIAL DAMAGES ARE EXCLUDED FROM COVERAGE UNDER THIS WARRANTY. SOME JURISDICTIONS DO NOT ALLOW FOR THE DISCLAIMERS, LIMITATIONS AND EXCLUSIONS IDENTIFIED ABOVE, AS A RESULT, THEY MAY NOT APPLY TO YOU. THIS WARRANTY GIVES YOU SPECIFIC RIGHTS, AND YOU MAY ALSO HAVE OTHER LEGAL RIGHTS WHICH MAY VARY FROM COUNTRY TO COUNTRY.

Neither the Can-Am SSV Distributor/Dealer nor any other person has been authorized to make any affirmation, representation or warranty regarding the product, other than those contained in this limited warranty, and if made, shall not be enforceable against BRP.

BRP reserves the right to modify this warranty at any time, being understood that such modification will not alter the warranty conditions applicable to the products sold while this warranty is in effect.

3) EXCLUSIONS – ARE NOT WARRANTED

The following are not warranted under this limited warranty under any circumstances:

- Normal wear and tear;
- Routine maintenance items, tune ups, adjustments (parts and labor);
- Damage caused by negligence or failure to provide proper maintenance and/or storage, as described in the Operator's Guide;

– Damage resulting from removal of parts, improper repairs, service, maintenance, modifications or use of parts not manufactured or approved by BRP or resulting from repairs done by a person that is not an authorized servicing Can-Am SSV Distributor/Dealer;
– Damage caused by abuse, abnormal use, neglect or operation of the product in a manner inconsistent with the recommended operation described in the Operator's Guide;
– Damage resulting from accident, submersion, fire, snow or water ingestion, theft, vandalism or any act of God;
– Operation with fuels, oils or lubricants which are not suitable for use with the product (see the Operator's Guide);
– Damage resulting from rust, corrosion or exposure to the elements;
– Incidental or consequential damages, or damages of any kind including without limitation towing, transportation expenses, storage, telephone, rental, taxi, inconvenience, insurance coverage, loan payments, loss of time, loss of income or time missed for downtime experience due to service work.

4) WARRANTY COVERAGE PERIOD

This warranty will be in effect from (1) the date of delivery to the first retail consumer or (2) the date the product is first put into use, whichever occurs first and for a period of:
– TWENTY-FOUR (24) CONSECUTIVE MONTHS for private use.
– SIX (6) CONSECUTIVE MONTHS for commercial use or rental use.

The product is used commercially when it is used in connection with any work or employment that generates income during any part of the warranty period. The product is also used commercially when, at any point during the warranty period, it is licensed for commercial use.

The repair or replacement of parts or the performance of service under this warranty does not extend the life of this warranty beyond its original expiration date.

Note that the duration and any other modalities of the warranty coverage are subject to the applicable national or local legislation in your country.

5) CONDITIONS TO HAVE WARRANTY COVERAGE

This warranty coverage is available **only** if **each** of the following conditions has been fulfilled:
– The 2013 Can-Am SSV must be purchased as new and unused by its first owner from a Can-Am SSV Distributor/Dealer authorized to distribute Can-Am SSVs in the country in which the sale occurred;
– The BRP specified pre-delivery inspection process must be completed and documented;
– The product must have undergone proper registration by an authorized Can-Am SSV Distributor/Dealer;
– The 2013 Can-Am SSV must be purchased within the EEA by an EEA resident; and
– Routine maintenance outlined in the Operator's Guide must be timely performed in order to maintain warranty coverage. BRP reserves the right to make warranty coverage contingent upon proof of proper maintenance.

BRP will not honor this limited warranty to any private use owner or commercial use owner if one of the preceding conditions has not been met. Such limitations are necessary in order to allow BRP to preserve both the safety of its products, and also that of its consumers and the general public.

6) WHAT TO DO TO OBTAIN WARRANTY COVERAGE UNDER THIS WARRANTY

The customer must cease using the SSV upon the appearance of an anomaly. The customer must notify a servicing Can-Am SSV Distributor/Dealer within two (2) months of the appearance of a defect and provide it with reasonable access to the product and reasonable opportunity to repair it. The customer must also present to the authorized Can-Am SSV Distributor/Dealer, proof of purchase of the product and must sign the repair/work order prior to starting the repair in order to validate the warranty repair. All parts replaced under this limited warranty become the property of BRP.

Note that the notification period is subject to the applicable national or local legislation in your country.

7) WHAT BRP WILL DO

To the extent permitted by law, BRP's obligations under this warranty are limited to, at its sole discretion, repairing parts found defective under normal use, maintenance and service, or replacing such parts with new genuine Can-Am SSV parts without charge for parts and labor, at any authorized Can-Am SSV Distributor/Dealer during the warranty coverage period under the conditions described herein. BRP's responsibility is limited to making the required repairs or replacements of parts. No claim of breach of warranty shall be cause for cancellation or rescission of the sale of the Can-Am SSV to the owner. You may have other legal rights which may vary from country to country.

In the event that service is required outside of the EEA, the owner will bear responsibility for any additional charges due to local practices and conditions, such as, but not limited to, freight, insurance, taxes, license fees, import duties, and any and all other financial charges, including those levied by governments, states, territories and their respective agencies.

BRP reserves the right to improve or modify products from time to time without assuming any obligation to modify products previously manufactured.

8) TRANSFER

If the ownership of a product is transferred during the warranty coverage period, this warranty shall also be transferred and be valid for the remaining coverage period provided BRP or an authorized Can-Am SSV Distributor/Dealer receives a proof that the former owner agreed to the transfer of ownership, in addition to the co-ordinates of the new owner.

9) CONSUMER ASSISTANCE

1. In the event of a controversy or a dispute in connection with this limited warranty, BRP suggests that you try to resolve the issue at the Can-Am SSV Distributor/Dealer level. We recommend discussing the issue with the authorized Can-Am SSV Distributor/Dealer's service manager or owner.
2. If further assistance is required, the Can-Am SSV Distributor/Dealer service department should be contacted in order to resolve the matter.
3. If the matter still remains unresolved then contact BRP at the address listed below.

For countries within Europe please contact our European office:

BRP EUROPE N.V.
Customer Assistance Center
Skaldenstraat 125
9042 Gent
Belgium
Tel.: + 32-9-218-26-00

For Scandinavian countries, please contact our Finland office:

BRP FINLAND OY
Service Department
Isoaavantie 7
FIN-96320 Rovaniemi
Finland
Tel.: + 358 16 3208 111

You can find your Can-Am Distributor/Dealer's coordinates on **www.brp.com**.

* In the EEA, products are distributed and serviced by BRP European Distribution S.A. and other affiliates or subsidiaries of BRP.

© 2012 Bombardier Recreational Products Inc. All rights reserved.
™ Trademark of Bombardier Recreational Products Inc. or its affiliated.

ADDITIONAL TERMS AND CONDITIONS FOR FRANCE ONLY

The following terms and conditions are applicable to products sold in France only:

The seller shall deliver goods that are complying with the contract and shall be responsible for defects existing upon delivery. The seller shall also be responsible for defects resulting from packaging, assembling instructions or the installation when it is its responsibility per the contract or if accomplished under its responsibility. To be compliant with the contract, the good shall:

1. Be fit for normal use for goods similar thereto and, if applicable:
   - Correspond to the description provided by the seller and have the qualities presented to the buyer though sample or model;
   - Have the qualities that a buyer may legitimately expect considering the public declarations of the seller, the manufacturer of its representative, including in advertising or labeling; or
2. Have the characteristics mutually agreed upon as between the parties or be fit for the specific use intended by the buyer and brought to the attention of the seller and which accepted.

The action for failure to comply is prescribed after two years after delivery of the goods. The seller is responsible for the warranty for hidden defects of the goods sold if such hidden defects are rendering the good unfit for the intended use, or if they diminish its use in such a way that the buyer would not have acquired the good or would have given a lesser price, had he known. The action for such hidden defects shall be taken by the buyer within 2 years of the discovery of the defect.

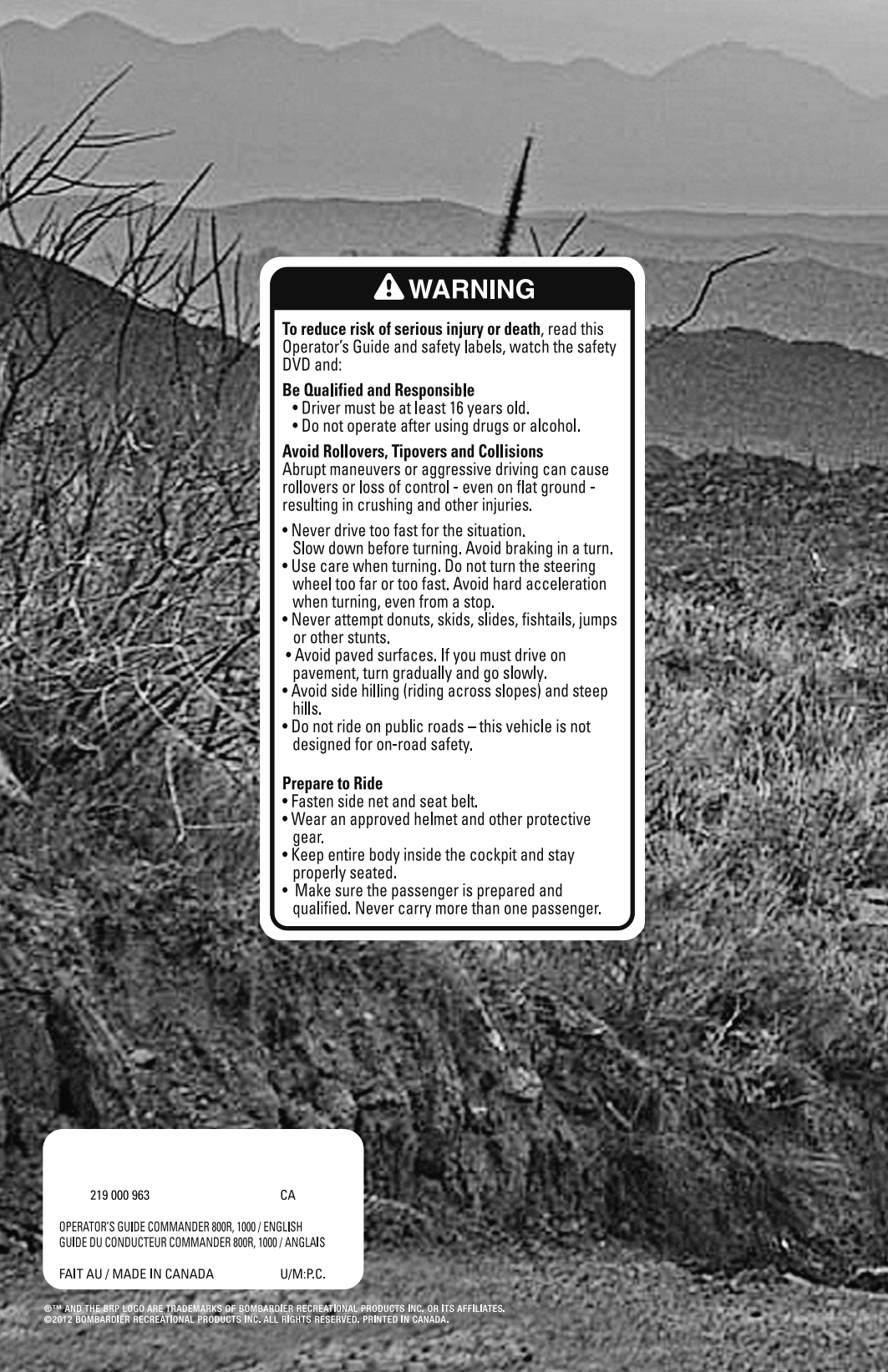

⚠ WARNING

To reduce risk of serious injury or death, read this Operator's Guide and safety labels, watch the safety DVD and:

Be Qualified and Responsible

- Driver must be at least 16 years old.
- Do not operate after using drugs or alcohol.

Avoid Rollovers, Tipovers and Collisions

Abrupt maneuvers or aggressive driving can cause rollovers or loss of control - even on flat ground - resulting in crushing and other injuries.

- Never drive too fast for the situation. Slow down before turning. Avoid braking in a turn.
- Use care when turning. Do not turn the steering wheel too far or too fast. Avoid hard acceleration when turning, even from a stop.
- Never attempt donuts, skids, slides, fishtails, jumps or other stunts.
- Avoid paved surfaces. If you must drive on pavement, turn gradually and go slowly.
- Avoid side hilling (riding across slopes) and steep hills.
- Do not ride on public roads – this vehicle is not designed for on-road safety.

Prepare to Ride

- Fasten side net and seat belt.
- Wear an approved helmet and other protective gear.
- Keep entire body inside the cockpit and stay properly seated.
- Make sure the passenger is prepared and qualified. Never carry more than one passenger.

219 000 963 CA

OPERATOR'S GUIDE COMMANDER 800R, 1000 / ENGLISH
GUIDE DU CONDUCTEUR COMMANDER 800R, 1000 / ANGLAIS

FAIT AU / MADE IN CANADA U/M:P.C.

©™ AND THE BRP LOGO ARE TRADEMARKS OF BOMBARDIER RECREATIONAL PRODUCTS INC. OR ITS AFFILIATES.
©2012 BOMBARDIER RECREATIONAL PRODUCTS INC. ALL RIGHTS RESERVED. PRINTED IN CANADA.

Can-Am™ Commander™

Cleaning Procedure of Exhaust Area

This is an addendum to the Operator's Guide of Can-Am Commander model year 2011, 2012 and 2013 vehicles.
It should be kept with the Operator's Guide in the vehicle.

BRP recommends to clean the exhaust area every 1 500 km (1,000 mi) or 50 hours of operation (whichever comes first).

⚠ WARNING

In order to avoid potential burns, never perform these operations immediately after the engine has been running as exhaust system is very hot. Let vehicle cool down before performing these operations.

NOTE: On following illustrations, some items such as the cage, the side net and seat belt were removed for clarity purposes.

Step 1

Driver's seat

1.1 Remove driver's seat as per Operator's Guide.

Step 2

Lateral console panel on driver's side

2.1 Remove plastic rivets securing the lateral console panel and keep for reinstallation later on.
To know more about how to remove the plastic rivets, please see next page.

2.2 Remove the lateral console panel.

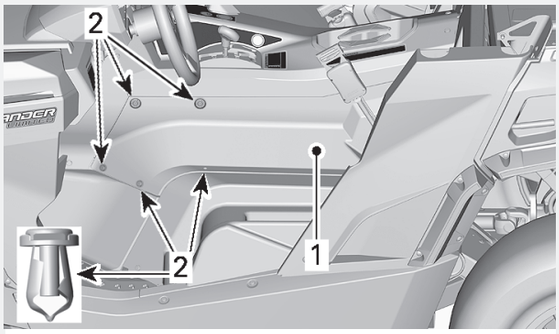

FRONT PORTION OF THE LH LATERAL CONSOLE PANEL
1. LH lateral console panel
2. Plastic rivets

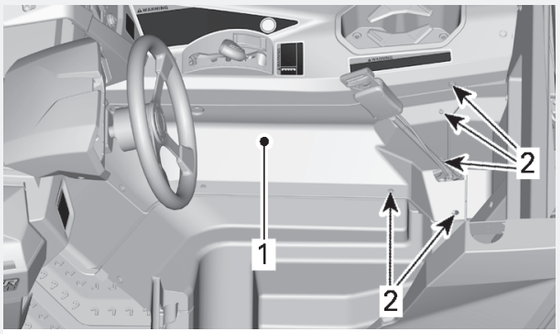

REAR PORTION OF THE LH LATERAL CONSOLE PANEL
1. LH lateral console panel
2. Plastic rivets

Step 3

Under seat storage compartment

3.1 Remove plastic rivets securing the under seat storage compartment and keep for reinstallation later on.

3.2 Remove under seat storage compartment. This part will still be attached to the vehicle by the seat belt.

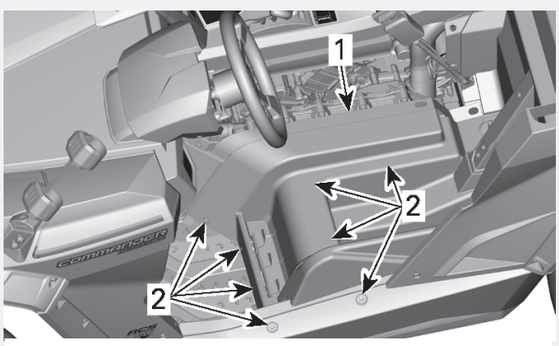

1. Under seat storage compartment
2. Plastic rivets

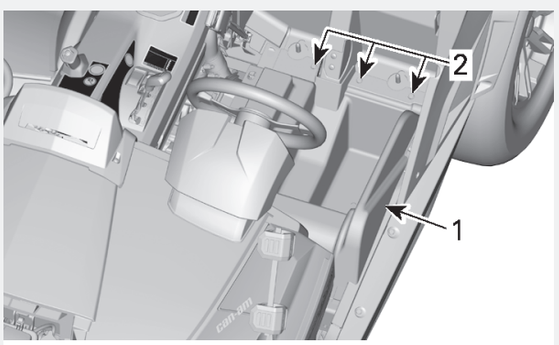

1. Under seat storage compartment
2. Plastic rivets

Step 4

Access to area that may require cleaning

4.1 Wearing gloves, hand remove all excess debris around exhaust.

4.2 Using a garden hose, thoroughly clean the area so no more debris can be in contact with exhaust.

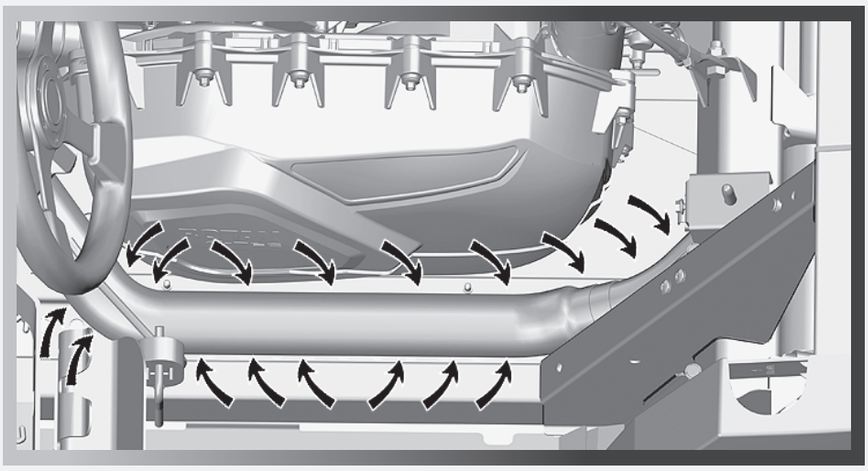

Step 5

Reinstallation of removed parts

5.1 The installation of the previously removed parts is the reverse of the removal procedure.

Supplementary information

How to remove the plastic rivets

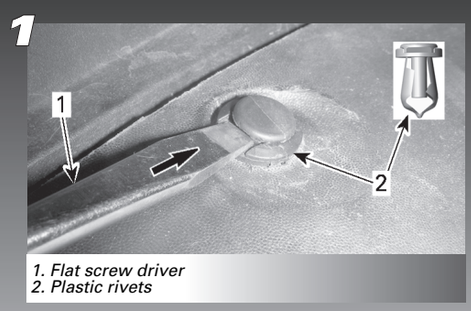

1. Flat screw driver
2. Plastic rivets

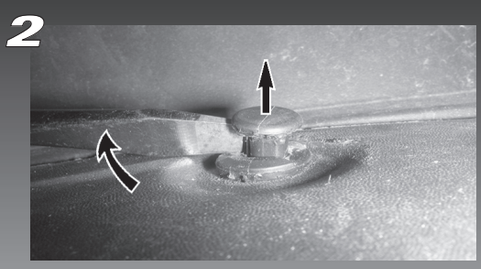

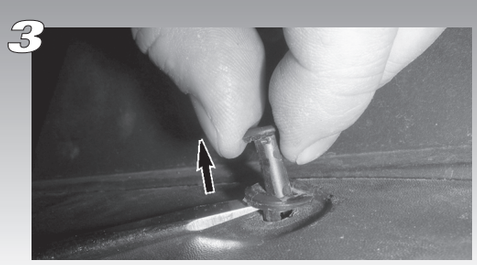

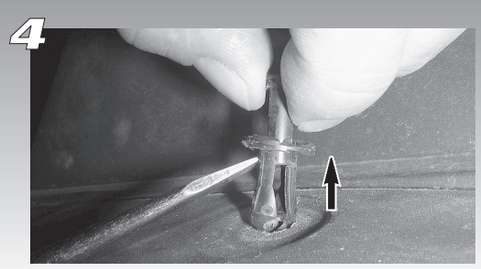

Step 6

Under cargo box cleaning

6.1 Tilt the cargo box and clean the area surrounding the exhaust.

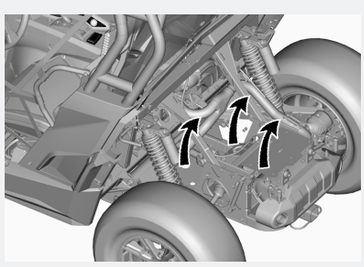

Step 7

For vehicles equipped with the Front Grill Kit

7.1 Make sure that the two grills are clean.

7.2 Make sure that the two grills are still attached properly.

7.3 Make sure that the two grills are in good condition.

For more information, refer to the Safety recall notice letter :

Can-Am Commander - Accumulation of debris in the exhaust area in very specific riding terrains and conditions.

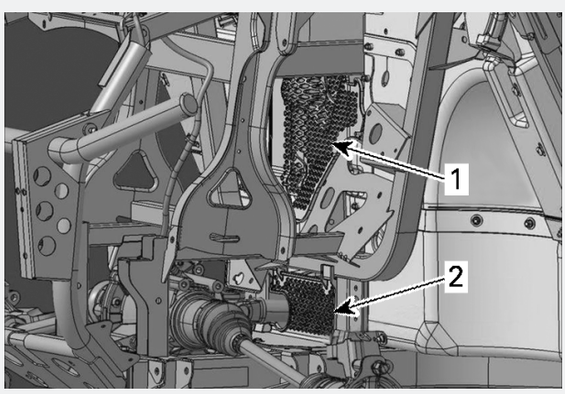

®™ AND THE BRP LOGO ARE TRADEMARKS OF BOMBARDIER RECREATIONAL PRODUCTS INC. OR ITS AFFILIATES.
©2012 BOMBARDIER RECREATIONAL PRODUCTS INC. ALL RIGHTS RESERVED. PRINTED IN CANADA. (TBG2013-002)